Guide Cylinders

Linear Transfer Unit

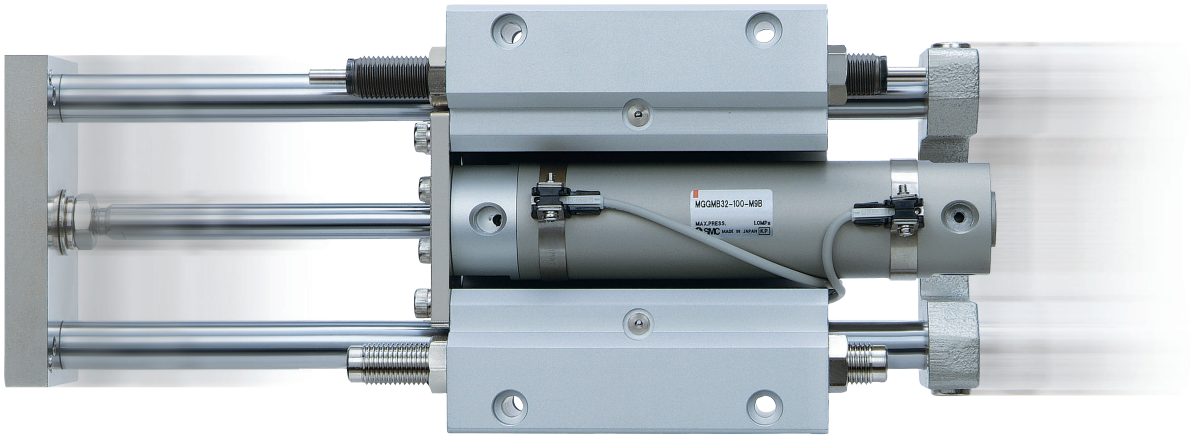

Integration of a basic cylinder and guide rods



Series MGG/MGC

SMC

CAT.EUS20-191Aa-UK

Guide Cylinders

Series MG□

Guide cylinder

Series MGG

Integration of a basic cylinder and guide rods.

- Long stroke is available.
- Equipped with a shock absorber as standard.

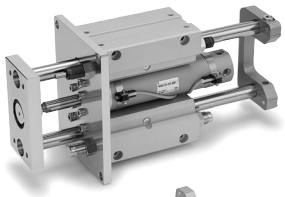

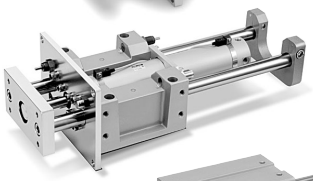

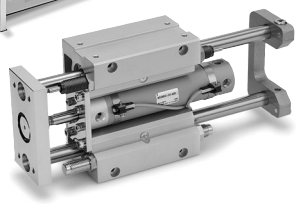

Bore size (mm)	Standard stroke (mm)						
	75	100	125	150	200	250	300
20	●	●	●	●	●	●	●
25	●	●	●	●	●	●	●
32	●	●	●	●	●	●	●
40	●	●	●	●	●	●	●
50	●	●	●	●	●	●	●
63	●	●	●	●	●	●	●
80	●	●	●	●	●	●	●
100	●	●	●	●	●	●	●

P. 1

P. 24
(End lock type)

Long Stroke

Bore size (mm)	Long stroke (mm)												
	250	300	350	400	450	500	600	700	800	900	1000	1100	1200	1300
20	●	●	●	●	●	●	●	●	●	●	●	●	●	●
25	●	●	●	●	●	●	●	●	●	●	●	●	●	●
32	●	●	●	●	●	●	●	●	●	●	●	●	●	●
40	●	●	●	●	●	●	●	●	●	●	●	●	●	●
50	●	●	●	●	●	●	●	●	●	●	●	●	●	●
63	●	●	●	●	●	●	●	●	●	●	●	●	●	●
80	●	●	●	●	●	●	●	●	●	●	●	●	●	●
100	●	●	●	●	●	●	●	●	●	●	●	●	●	●

Guide cylinder / End lock type

Series MGG

Holds the cylinder's home position even if the air supply is cut off.

- When air is discharged at the stroke end position, the lock engages to maintain the rod in that position.

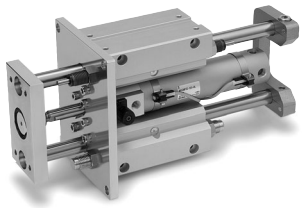

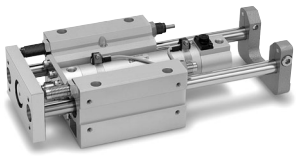

Guide cylinder / Compact type

Series MGC

Compact type of Series MGG

- Compact guide body and front plate

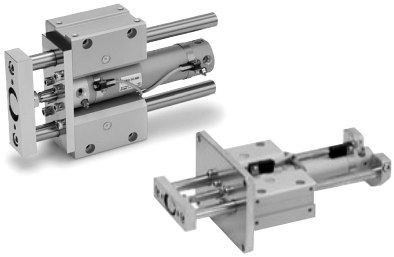

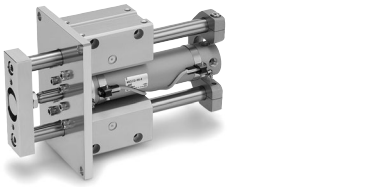

Bore size (mm)	Standard stroke (mm)						
	75	100	125	150	200	250	300
20	●	●	●	●	●	●	●
25	●	●	●	●	●	●	●
32	●	●	●	●	●	●	●
40	●	●	●	●	●	●	●
50	●	●	●	●	●	●	●

P. 39

Long Stroke

Bore size (mm)	Long stroke (mm)										
	250	300	350	400	450	500	600	700	800	900	1000
20	●	●	●	●	●	●	●	●	●	●	●
25	●	●	●	●	●	●	●	●	●	●	●
32	●	●	●	●	●	●	●	●	●	●	●
40	●	●	●	●	●	●	●	●	●	●	●
50	●	●	●	●	●	●	●	●	●	●	●

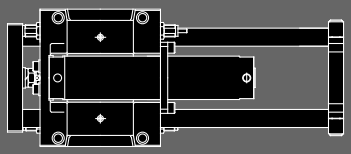

Guide Cylinder
Series MGG

ø20, ø25, ø32, ø40, ø50, ø63, ø80, ø100

Integration of a basic cylinder and guide rods
Linear Transfer Unit

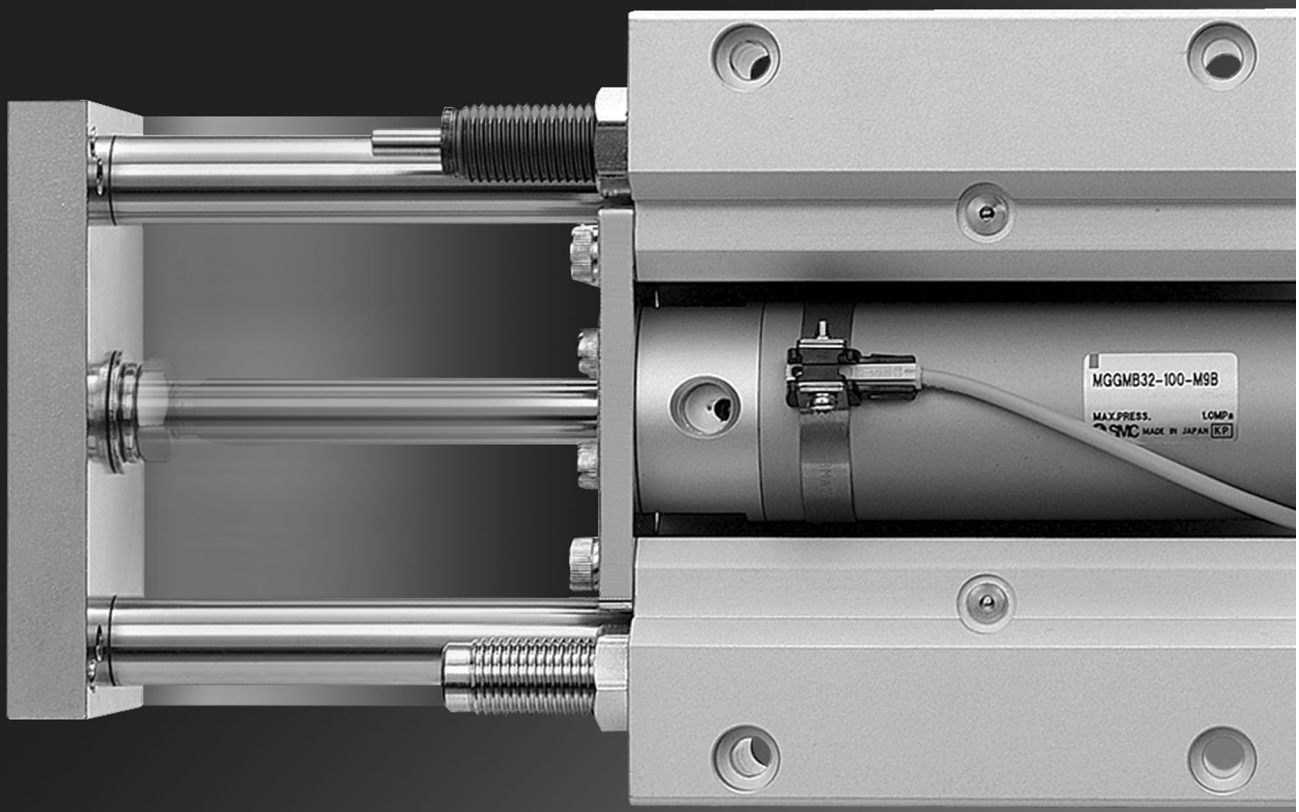

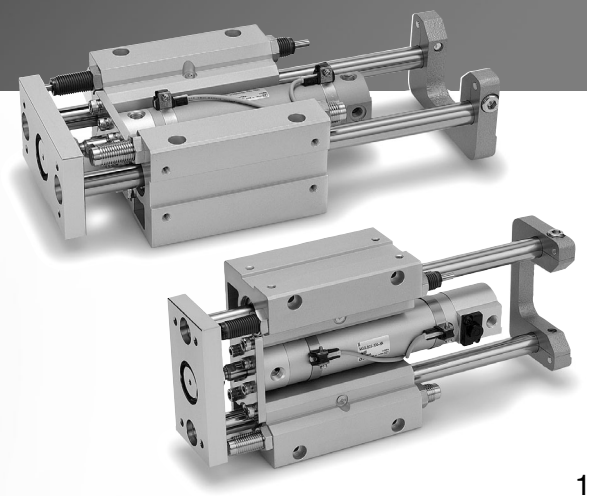

Basic cylinder with integrated guide rods
A linear transfer unit that achieves high lateral load

Guide Cylinder
Ø 20, Ø 25, Ø 32, Ø 40,

Two types of guide rod bearings

Slide bearing ····· Excellent wear resistance and heavy load capacity
Ball bushing bearing ····· High precision and smooth operation

Can be mounted with compact auto switches.

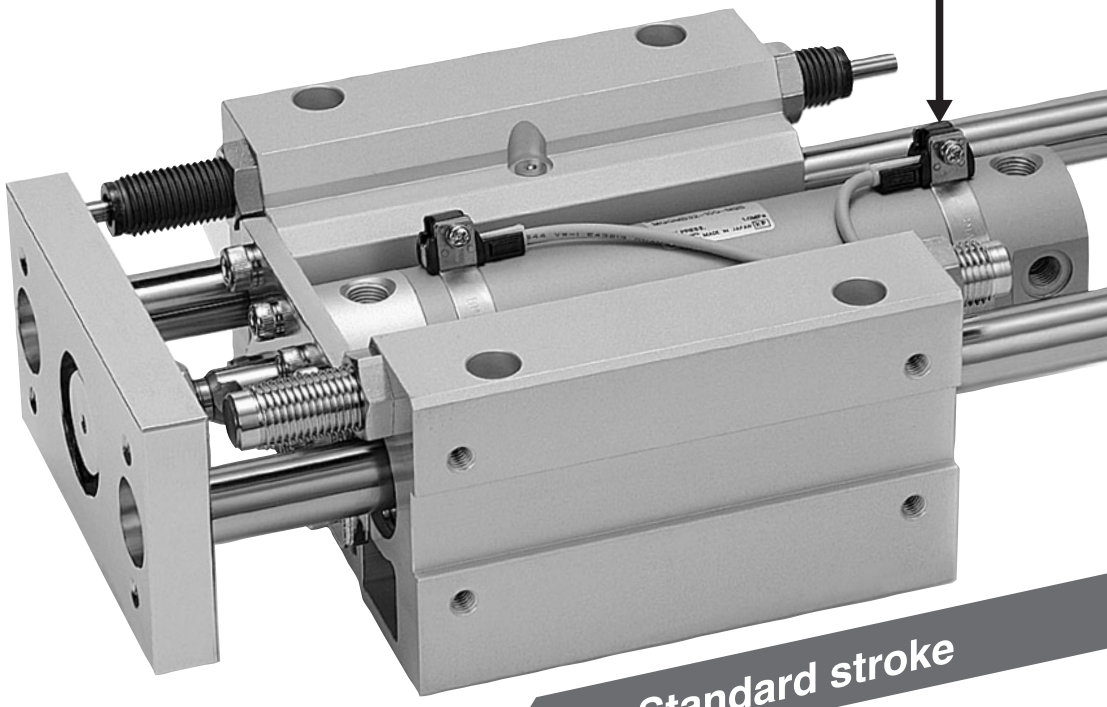

Standard stroke

Cylinder position can be detected.

All models have built-in magnets for auto switches.
Auto switch capable throughout entire stroke range.

Application Example

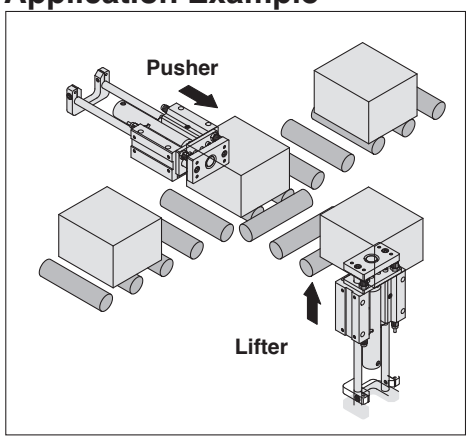

Non-rotating accuracy improved by using two guide rods

Bore size (mm)	20	25	32	40	50	63	80	100
Slide bearing	±0.07°	±0.06°	±0.06°	±0.05°	±0.04°	±0.04°	±0.04°	±0.03°
Ball bushing bearing	±0.06°	±0.05°	±0.04°	±0.04°	±0.04°	±0.03°	±0.03°	±0.02°

When the cylinder is retracted (initial value), with no load or without deflection of the guide rod, the non-rotating accuracy shall be the value in the table or less.

A grease port is provided as standard.

This allows lubrication of the bearings.

in a compact configuration
resistance and non-rotating precision

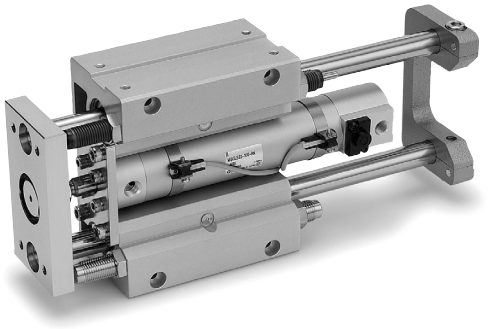

Series MGG
Ø 50, Ø 63, Ø 80, Ø 100

End lock option introduced to allow holding of cylinder position even when air supply is cut off.

When air is discharged at the stroke end position, the lock engages to maintain the rod in that position..

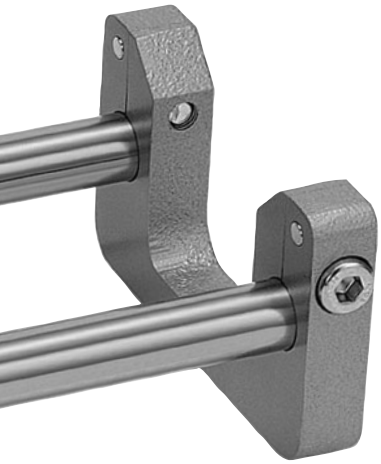

Long strokes available

- Maximum Ø 20 to 400 st
- Maximum Ø 25 to 500 st
- Maximum Ø 32 to 600 st
- Maximum Ø 40 to 800 st
- Maximum Ø 50 to 1000 st
- Maximum Ø 63 to 1100 st
- Maximum Ø 80 to 1200 st
- Maximum Ø 100 to 1300 st

ø20: 75 to 200 st
ø25 to ø100: 75 to 300 st

Shock absorbers and adjusting bolts are standard.

Stroke end shock absorption for high speed operation and fine stroke adjustment are possible.

Simple adjustment of extension stroke

The extension stroke can be adjusted by moving the rear plate.

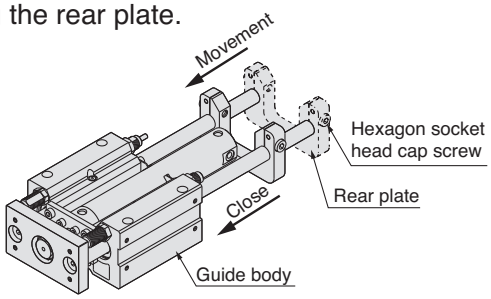

Four mounting styles

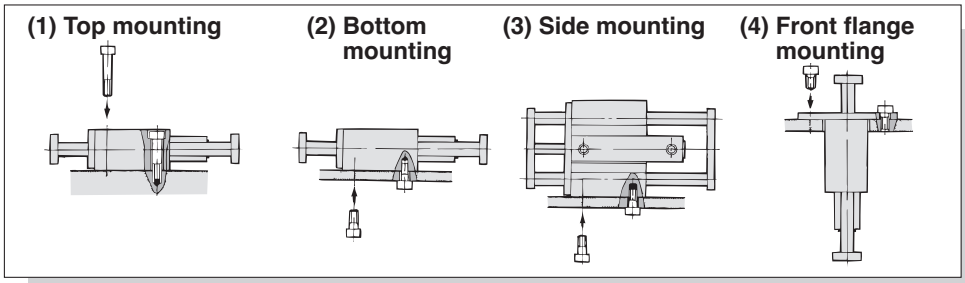

A full range of made-to-order specifications

Guide Cylinder

Series MGG

Ø 20, Ø 25, Ø 32, Ø 40, Ø 50, Ø 63, Ø 80, Ø 100

How to Order

MGG L B 32 □ – 100 – M9BW □ – □

Guide Cylinder

Bearing type

M	Slide bearing
L	Ball bushing

Mounting type

B	Basic type
F	Front mounting flange type

Bore size

20	20 mm
25	25 mm
32	32 mm
40	40 mm
50	50 mm
63	63 mm
80	80 mm
100	100 mm

Port thread type

–	Rc
TN	NPT
TF	G

Cylinder stroke (mm)
Refer to "Standard Stroke" on page 5.

Auto switch

–	Without auto switch (Built-in magnet)

∗ For the applicable auto switch model, refer to the table below.

Number of auto switches

–	2 pcs.
S	1 pc.
n	"n" pcs.

Made to Order
Refer to page 6 for details.

Applicable Auto Switches/For detailed auto switch specifications, refer to page 56 through to 70.

Type	Special function	Electrical entry	Indicator light	Wiring (Output)	Auto switch model DC	Auto switch model AC	Applicable bore (mm) Ø 20 to Ø 63 Perpendicular	Ø 20 to Ø 63 In-line	Ø 80, Ø 100 In-line	Lead wire length (m) 0.5 (Nil)	1 (M)	3 (L)	5 (Z)	None (N)	Pre-wired connector	Applicable load	
Solid state auto switch	–	Grommet	Yes	3-wire (NPN)	5 V,12 V	–	M9NV	M9N	–	●	●	●	○	–	○	IC circuit	Relay, PLC
							–	–	G59	●	–	●	○	–	○		
				3-wire (PNP)			M9PV	M9P	–	●	●	●	○	–	○		
							–	–	G5P	●	–	●	○	–	○		
				2-wire	12 V		M9BV	M9B	–	●	●	●	○	–	○	–	
							–	–	K59	●	–	●	○	–	○		
		Connector					–	H7C	–	●	–	●	●	●	–		
	Diagnostic indication (2-colour indicator)	Grommet		3-wire (NPN)	24 V	5 V,12 V	M9NWV	M9NW	–	●	●	●	○	–	○	IC circuit	
							–	–	G59W	●	–	●	○	–	○		
				3-wire (PNP)			M9PWV	M9PW	–	●	●	●	○	–	○		
							–	–	G5PW	●	–	●	○	–	○		
				2-wire	12 V		M9BWV	M9BW	–	●	●	●	○	–	○	–	
							–	–	K59W	●	–	●	○	–	○		
	Water resistant (2-colour indicator)			3-wire (NPN)	5 V,12 V		M9NAV∗1	M9NA∗1	–	○	○	●	○	–	○	IC circuit	
				3-wire (PNP)			M9PAV∗1	M9PA∗1	–	○	○	●	○	–	○		
				2-wire	12 V		M9BAV∗1	M9BA∗1	–	○	○	●	○	–	○	–	
							–	–	G5BA∗1	–	–	●	○	–	○		
	With diagnostic output (2-colour indicator)			4-wire (NPN)		5 V ,12 V	–	H7NF	G59F	●	–	●	○	–	○	IC circuit	
Reed auto switch	–	Grommet	Yes	3-wire (NPN equivalent)	–	5 V	–	A96V	A96	–	●	–	●	–	–	–	IC circuit	–
			No	2-wire	24 V	12 V	100 V	A93V∗2	A93	–	●	●	●	●	–	–	–	Relay, PLC
			No				100 V or less	A90V	A90	–	●	–	●	–	–	–	IC circuit	
			Yes				100 V, 200 V	–	B54		●	–	●	●	–	–	–	
			No				200 V or less	–	B64		●	–	●	–	–	–		
		Connector	Yes				–	–	C73C	–	●	–	●	●	●	–		
			No				24 V or less	–	C80C	–	●	–	●	●	●	–	IC circuit	
	Diagnostic indication (2-colour indicator)	Grommet	Yes			–	–	–	B59W		●	–	●	–	–	–	–	

∗1 Water resistant type auto switches can be mounted on the above models, but in such case SMC cannot guarantee water resistance. A water resistant type cylinder is recommended for use in an environment which requires water resistance. Consult with SMC regarding water resistant types for Ø 20 and Ø 25.

∗2 1 m type lead wire is only applicable to D-A93.

∗ Lead wire length symbols: 0.5 m ····· — (Example) M9NW
1 m ····· M (Example) M9NWM
3 m ····· L (Example) M9NWL
5 m ····· Z (Example) M9NWZ
None····· N (Example) H7CN

∗ Solid state auto switches marked with "○" are produced upon receipt of order.

∗ Since there are other applicable auto switches than listed, refer to page 36 for details.
∗ For details about auto switches with pre-wired connector, refer to SMC's "Best Pneumatics" catalogue.
∗ D-A9□(V)/M9□(V)/M9□W(V)/M9□A(V) auto switches are shipped together (not assembled).
∗ (Only switch mounting brackets are assembled at the time of shipment.)

Caution
When using auto switches shown inside ( ), stroke end detection may not be possible depending on the One-touch fitting or speed controller model. Please contact SMC in this case.

Specifications

Symbol
Rubber bumper

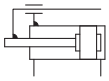

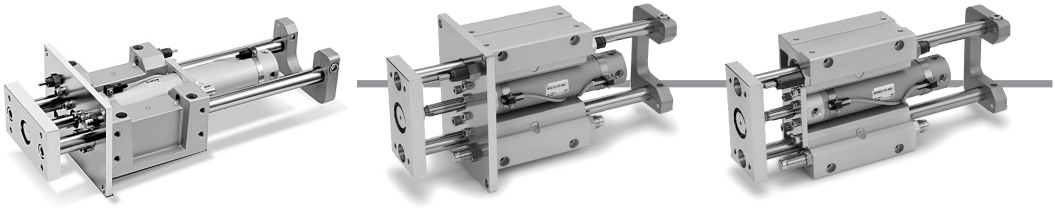

Standard Stroke

Model (Bearing type)	Bore size (mm)	Standard stroke (mm)	Long stroke (mm)
MGGM (Slide bearing) MGGL (Ball bushing)	**20**	75, 100, 125, 150, 200	250, 300, 350, 400
	25	75, 100, 125, 150, 200, 250, 300	350, 400, 450, 500
	32		350, 400, 450, 500, 600
	40		350, 400, 450, 500, 600, 700, 800
	50		350, 400, 450, 500, 600, 700, 800, 900, 1000
	63		350, 400, 450, 500, 600, 700, 800, 900, 1000, 1100
	80		350, 400, 450, 500, 600, 700, 800, 900, 1000, 1100, 1200
	100		350, 400, 450, 500, 600, 700, 800, 900, 1000, 1100, 1200, 1300

∗ Intermediate strokes and short strokes other than the above are produced upon receipt of order.

Specifications

Model		MGG□□20	MGG□□25	MGG□□32	MGG□□40	MGG□□50	MGG□□63	MGG□□80	MGG□□100
Basic cylinder		CDG1ZN Bore size Port thread type – Stroke Z – Auto switch						CDG1BN Bore size Port thread type – Stroke Z – Auto switch	
Bore size (mm)		20	25	32	40	50	63	80	100
Action		Double acting							
Fluid		Air							
Proof pressure		1.5 MPa							
Maximum operating pressure		1.0 MPa							
Minimum operating pressure		0.15 MPa (Horizontal with no load)							
Ambient and fluid temperature		–10 to 60°C							
Piston speed		50 to 1000 mm/s						50 to 700 mm/s	
Cushion	**Basic cylinder**	Rubber bumper							
	Guide unit	Built-in shock absorbers (2 pcs.)							
Stroke adjusting range (One side) [Built-in adjusting bolts (2 pcs.)]		0 to –10 mm	0 to –15 mm						
Base cylinder lubrication		Non-lube							
Stroke length tolerance		$^{+1.9}_{+0.2}$ mm (1000 st or less), $^{+2.3}_{+0.2}$ mm (1001 st or more)							
Non-rotating∗ accuracy	**Slide bearing**	±0.07°	±0.06°	±0.06°	±0.05°	±0.04°	±0.04°	±0.04°	±0.03°
	Ball bushing	±0.06°	±0.05°	±0.04°	±0.04°	±0.04°	±0.03°	±0.03°	±0.02°
Piping port size (Rc, NPT, G)		1/8				1/4		3/8	1/2

∗ When the cylinder is retracted (initial value), the non-rotating accuracy without loads or deflection of the guide rods will be below the values shown in the table above as a guideline.

Shock Absorber Specifications

Shock absorber model		RB1007	RB1412	RB2015	RB2725
Applicable guide cylinder		MGG□□20	MGG□□25, 32	MGG□□40, 50, 63	MGG□□80, 100
Maximum energy absorption (J)		5.88	19.6	58.8	147
Stroke absorption (mm)		7	12	15	25
Maximum collision speed (m/s)		5			
Max. operating frequency (cycle/min)∗		70	45	25	10
Ambient temperature range (°C)		–10 to 80			
Spring force (N)	**Extended**	4.22	6.86	8.34	8.83
	Retracted	6.86	15.98	20.5	20.01

∗ It denotes the values at the maximum energy absorption per one cycle. Therefore, the operating frequency can be increased according to the energy absorption.

Shock Absorbers

Type	Bore size (mm)			
	20	**25, 32**	**40, 50, 63**	**80, 100**
Standard (shock absorber RB series)	RB1007	RB1412	RB2015	RB2725
Shock absorber soft type RJ series type (-XB22)	RJ1007H	RJ1412H	—	—

∗ The shock absorber service life is different from that of the MGG cylinder.
Refer to “Specific Product Precautions” for each shock absorber for the replacement period.
∗ The shock absorber soft type RJ series type (-XB22) is a made to order specification.

Theoretical Output



Unit: N

Bore size (mm)	Rod size (mm)	Operating direction	Piston area (mm^2)	Operating pressure (MPa)								
				0.2	0.3	0.4	0.5	0.6	0.7	0.8	0.9	1.0
20	8	OUT	314	62.8	94.2	126	157	188	220	251	283	314
		IN	264	52.8	79.2	106	132	158	185	211	238	264
25	10	OUT	491	98.2	147	196	246	295	344	393	442	491
		IN	412	82.4	124	165	206	247	288	330	371	412
32	12	OUT	804	161	241	322	402	482	563	643	724	804
		IN	691	138	207	276	346	415	484	553	622	691
40	16	OUT	1260	252	378	504	630	756	882	1010	1130	1260
		IN	1060	212	318	424	530	636	742	848	954	1060
50	20	OUT	1960	392	588	784	980	1180	1370	1570	1760	1960
		IN	1650	330	495	660	825	990	1160	1320	1490	1650
63	20	OUT	3120	624	936	1250	1560	1870	2180	2500	2810	3120
		IN	2800	560	840	1120	1400	1680	1960	2240	2520	2800
80	25	OUT	5030	1010	1510	2010	2520	3020	3520	4020	4530	5030
		IN	4540	908	1360	1820	2270	2720	3180	3630	4090	4540
100	30	OUT	7850	1570	2360	3140	3930	4710	5500	6280	7070	7850
		IN	7150	1430	2150	2860	3580	4290	5010	5720	6440	7150

Note) Theoretical output (N) = Pressure (MPa) x Piston area (mm^2)

Weight

(kg)

Bore size (mm)		20	25	32	40	50	63	80	100
Basic weight	LB type (Ball bushing bearing / Basic)	1.72	2.82	3.84	7.19	11.63	16.6	26.32	37.46
	LF type (Ball bushing bearing / Front mounting flange)	2.44	3.79	4.87	9.38	14.17	20.58	33	45.98
	MB type (Slide bearing / Basic)	1.71	2.79	3.36	7.17	11.36	16.22	25.61	36.36
	MF type (Slide bearing / Front mounting flange)	2.42	3.75	4.39	9.37	13.89	20.2	32.29	44.89
Additional weight per each 50 mm of stroke		0.14	0.17	0.25	0.4	0.61	0.82	1.11	1.48
Additional weight for long stroke		0.01	0.01	0.02	0.03	0.06	0.1	0.19	0.26
Additional weight with bracket		0.011	0.018	0.019	0.031	0.061	0.269	0.384	0.548

Calculation: (Example) **MGGLB32-500**
(Ball bushing bearing / Basic, ø32/500 st., With bracket)
- Basic weight····· 3.84 (LB type)
- Additional stroke weight····· 0.25/50 st
- Stroke····· 500 st
- Additional weight for long stroke····· 0.02
- Additional weight with bracket····· 0.019

3.84 + 0.25 x 500/50 + 0.02 + 0.019 = 6.379 kg

Moving Parts Weight

(kg)

Bore size (mm)	20	25	32	40	50	63	80	100
Moving parts basic weight	0.69	1.14	1.61	3.09	5.23	8.29	13.09	18.58
Additional weight per each 50 mm of stroke	0.109	0.135	0.203	0.326	0.509	0.679	0.948	1.265

Calculation: (Example) **MGGLB32-500**
- Moving parts basic weight····· 1.61
- Additional stroke weight·····0.203/50 st
- Stroke····· 500 st

1.61 + 0.203 x 500/50 = 3.64 kg

Made to Order

Made to Order: Individual Specifications
(For details, refer to pages 71)

Symbol	Specifications
-X440	With piping ports for grease
-X772	With piping ports for grease, auto switch rail mounting type

Made to Order Specifications

Symbol	Specifications
-XB6	Heat resistant cylinder (150 °C)
-XB13	Low speed cylinder (5 to 50 mm/s)
-XB22	Shock absorber soft type RJ series type
-XC4	With heavy duty scraper
-XC6□	Made of stainless steel
-XC8	Adjustable stroke cylinder/Adjustable extension type
-XC9	Adjustable stroke cylinder/Adjustable retraction type
-XC11	Dual stroke cylinder/Single rod type
-XC13	Auto switch rail mounting
-XC22	Fluoro rubber seals
-XC35	With coil scraper
-XC37	Larger throttle diameter of connecting port
-XC56	With knock pin hole
-XC71	Helical insert thread specifications
-XC72	Not possible for built-in magnet for auto switch
-XC73	Cylinder with lock (CDNG)
-XC79	Machining tapped hole, drilled hole, and pin hole additionally
-XC83	Cylinder with lock (MDNB)
-XC104	Built-in cylinder with lock (MWB)

Air-hydro

Low pressure hydraulic cylinder of 1.0 MPa or less
When used together with a CC series air-hydro unit, constant and low speed actuation, and intermediate stopping similar to hydraulic units are possible with the use of valves and other pneumatic equipment.

MGG**H** | **Bearing type** | **Mounting type** | **Bore size** - **Stroke**

H: Air-hydro

Specifications

Bore size (mm)		20, 25, 32, 40, 50, 63
Action		Double acting
Fluid		Turbine oil
Proof pressure		1.5 MPa
Maximum operating pressure		1.0 MPa
Minimum operating pressure		0.18 MPa (Horizontal with no load)
Piston speed		15 to 300 mm/s
Cushion	**Basic cylinder**	None
	Guide unit	Built-in shock absorbers (2 pcs.)
Ambient and fluid temperature		+5 to 60°C
Mounting		Basic type Front mounting flange type

∗ For specifications other than the above, refer to page 5.
∗ Auto switch can be mounted.

Dimensions (Dimensions other than the above are the same as the standard type.)

ø20 to ø50

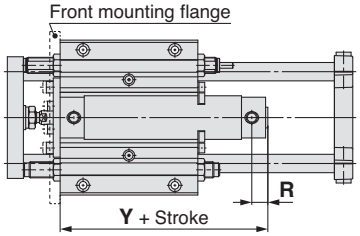

ø63

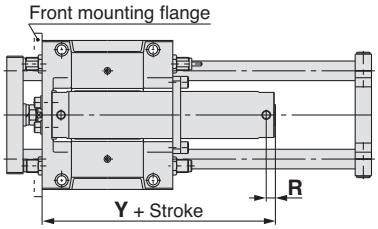

(mm)

Bore size (mm)	20	25	32	40	50	63
R	14	14	14	15	16	16
Y	79	79	81	89	104	119

Series Applicable to Operating Environments that Do Not Accept Copper

- Copper (Cu) and zinc (Zn)-free····· 25A series
- Copper and Fluorine-free·····20 series

∗ For details, refer to the SMC website.

Water Resistant

The installation of a special scraper in front of the rod seal on the base cylinder protects against the entry of liquids from the environment into the cylinder. This type can be used in environments with machine tool coolants, and with water spray such as food processing and car washing equipment.

MGG**M** | Mounting type | Bore size | Port thread type | **R** - Stroke - M9NA - -XC6□

M: Slide bearing

R: Water resistant cylinder

R	NBR seals (Nitrile rubber)
V	FKM seals (Fluororubber)

M9NA: Water resistant 2-color indicator solid state auto switch

-XC6□: Made to Order Specifications

Specifications

Bore size (mm)		32, 40, 50, 63, 80, 100
Action		Double acting
Bearing type		Slide beaning
Cushion		Rubber bumper Built-in shock absorbers
Auto switch mounting		Band mounting
Made to Order	**–XC6**	Piston rod and rod end nut made of stainless steel
	–XC6A	Stainless steel used for all iron parts
	–XC6B	Stainless steel rod end moving parts
	–XC6C	Stainless steel rods

∗ Specifications other than the above is the same as the standard type.
Note 1) RBL (coolant resistant) type shock absorber is used.
Note 2) For details, refer to the **Web Catalog**.

Dimensions (Dimensions other than the above are the same as the standard type.)

ø32 to ø50

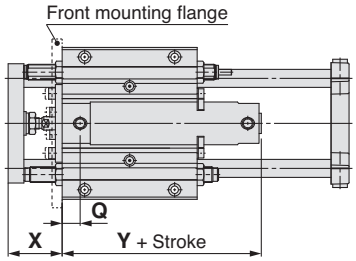

ø63 to ø100

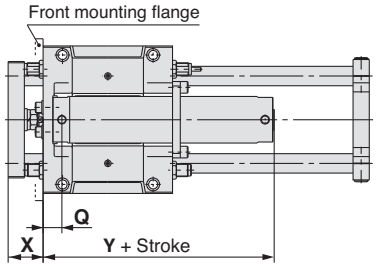

(mm)

Bore size (mm)	Q			X	Y
	Rc	NPT	G		
32	16		14.5	48	77 (85)
40	17		17	58	84 (93)
50	19		19	69	97 (109)
63	34		34	56	112 (124)
80	46		43.5	68	137 (151)
100	47		44.5	68	138 (152)

∗ ( ): Denotes the dimensions for long stroke.

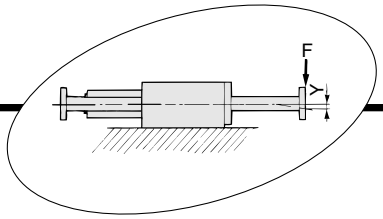

Slide Bearing
Allowable End Load and Deflection

MGGM□20-Stroke

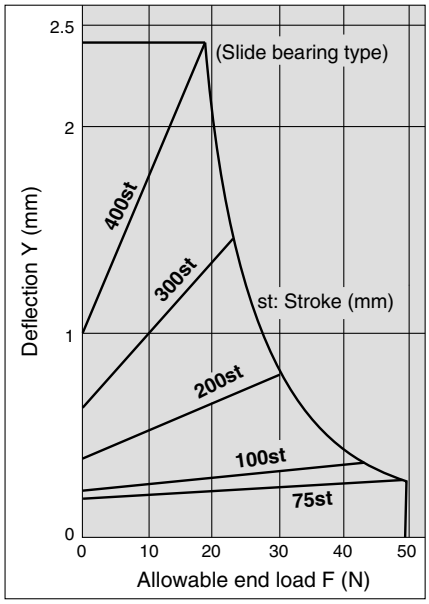

MGGM□25-Stroke

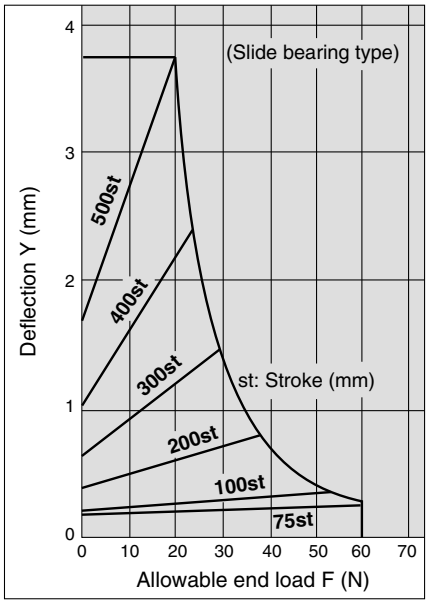

MGGM□32-Stroke

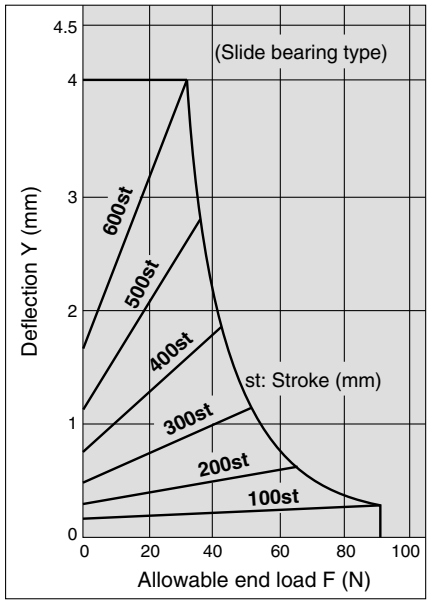

MGGM□40-Stroke

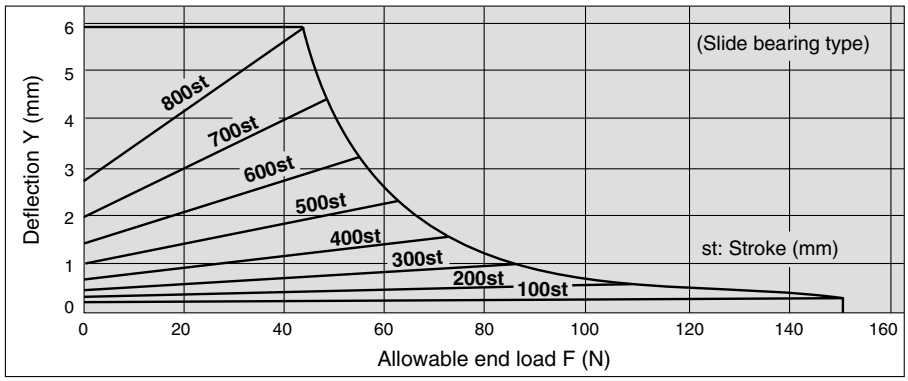

MGGM□50-Stroke

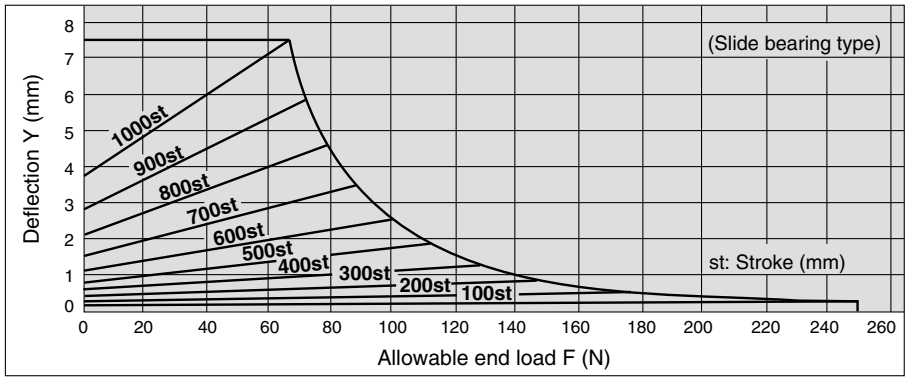

MGGM□63-Stroke

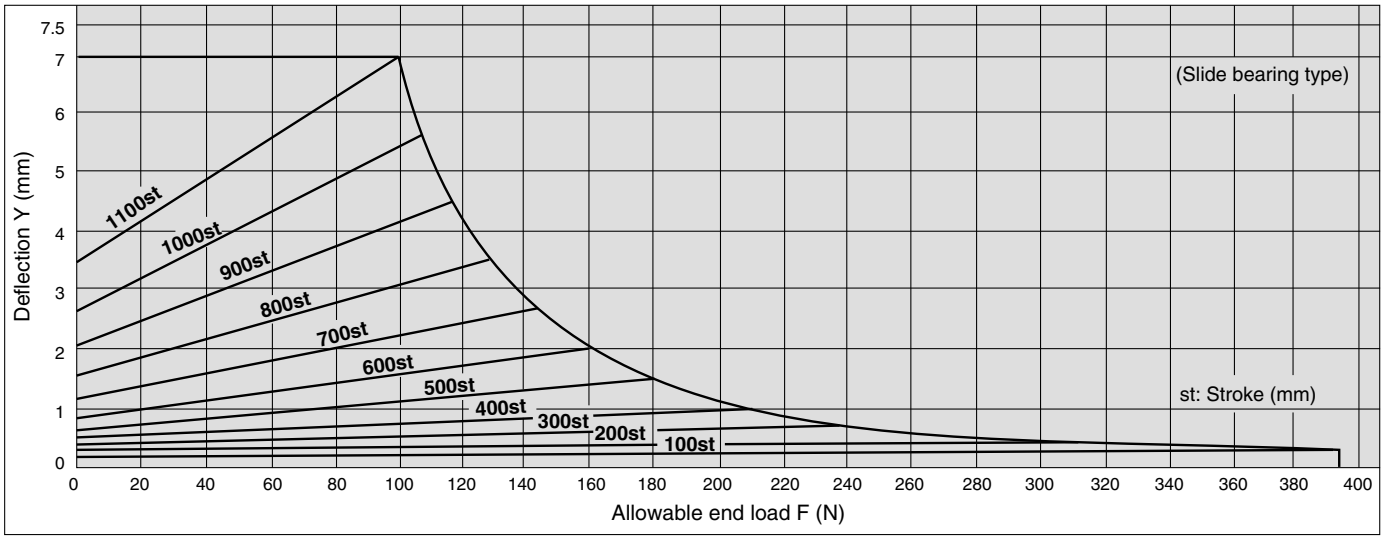

MGGM□80-Stroke

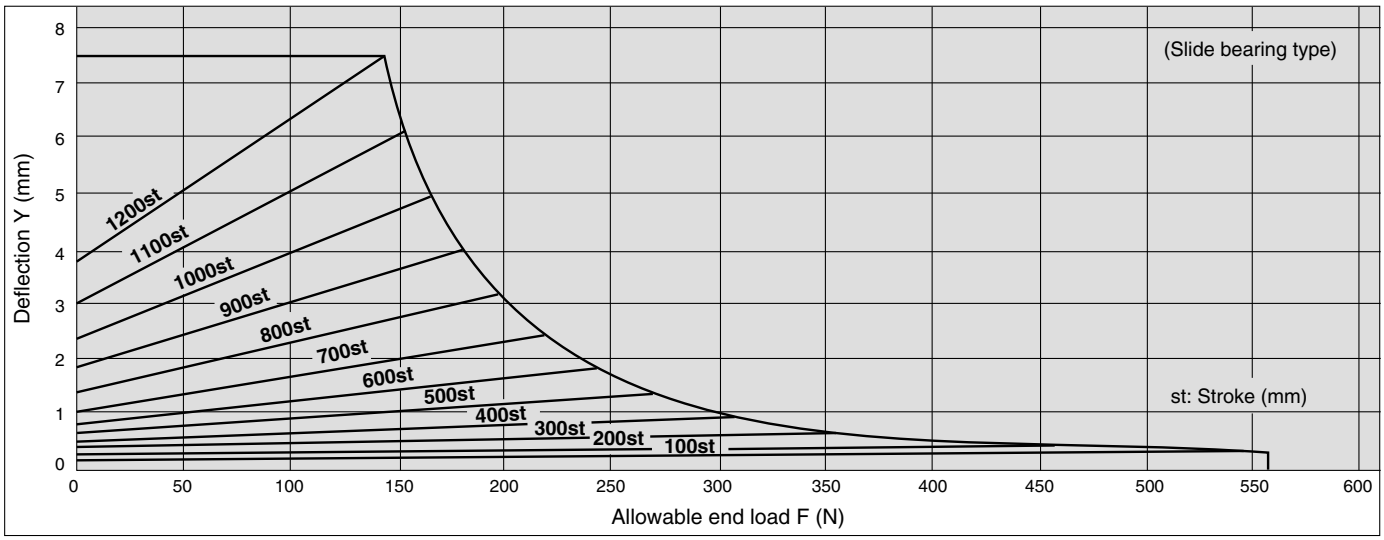

MGGM□100-Stroke

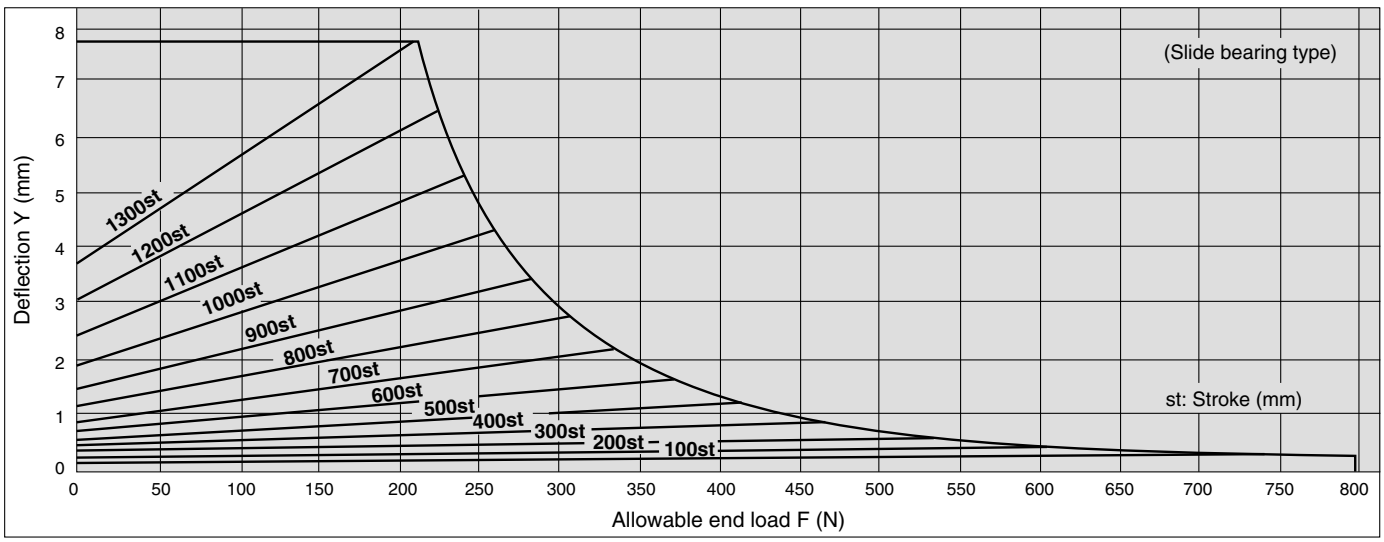

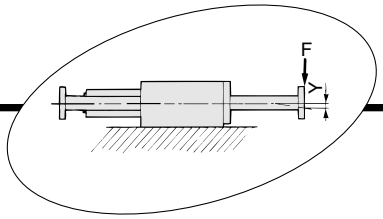

Ball Bushing Bearing
Allowable End Load and Deflection

MGGL□20-Stroke

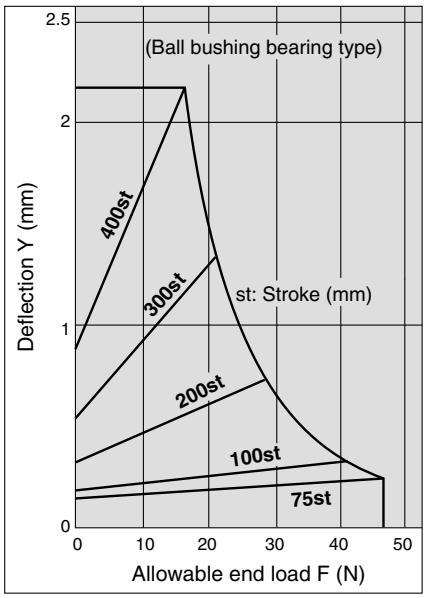

MGGL□25-Stroke

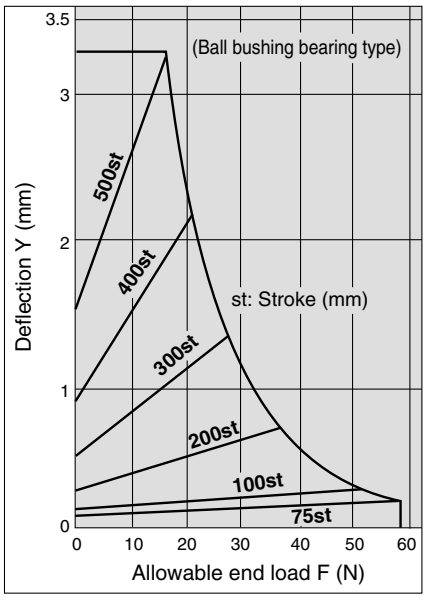

MGGL□32-Stroke

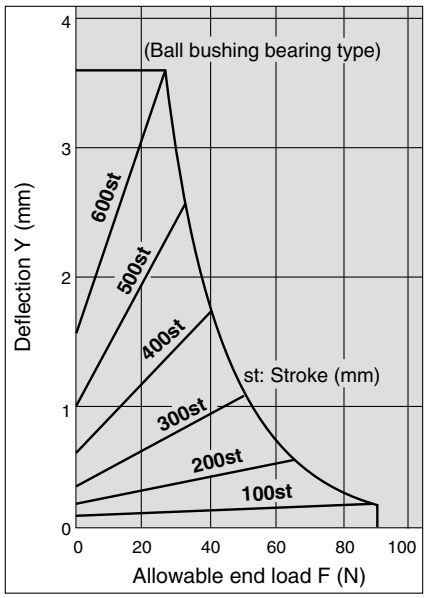

MGGL□40-Stroke

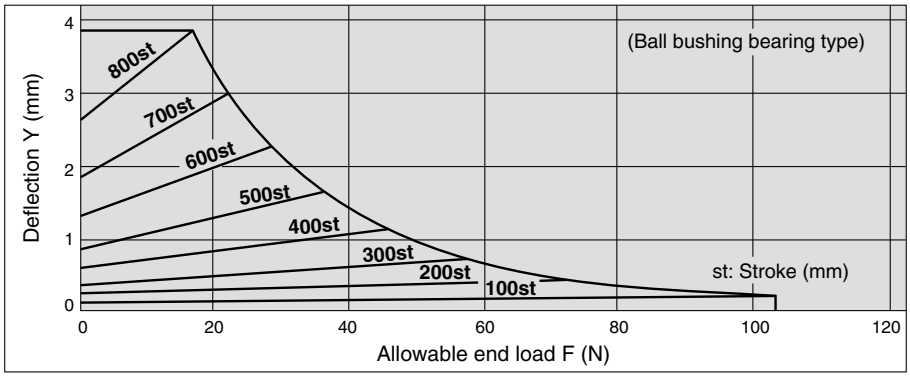

MGGL□50-Stroke

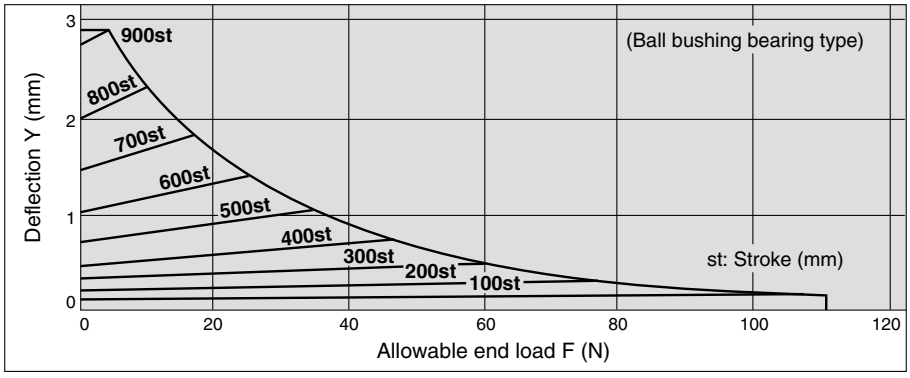

MGGL□63-Stroke

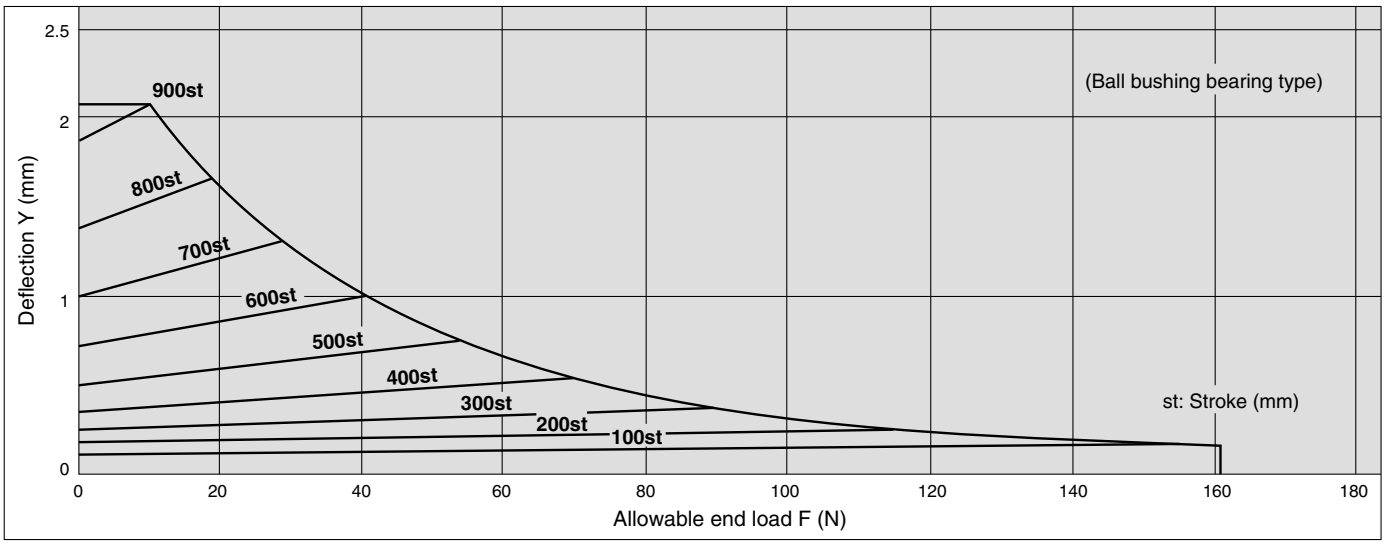

MGGL□80-Stroke

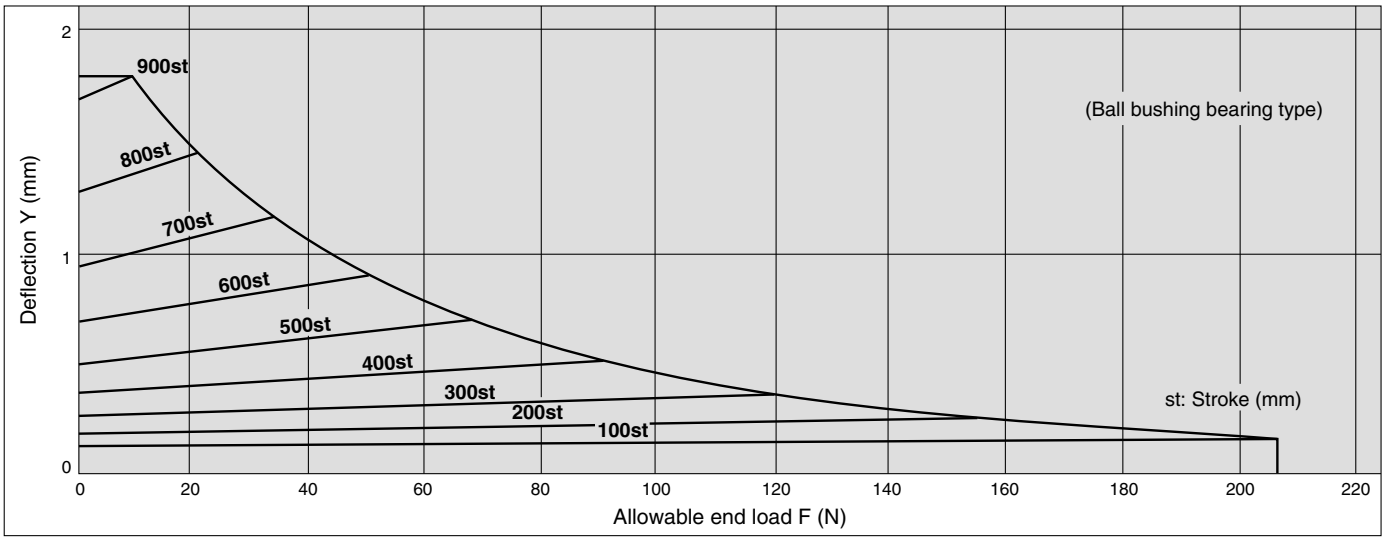

MGGL□100-Stroke

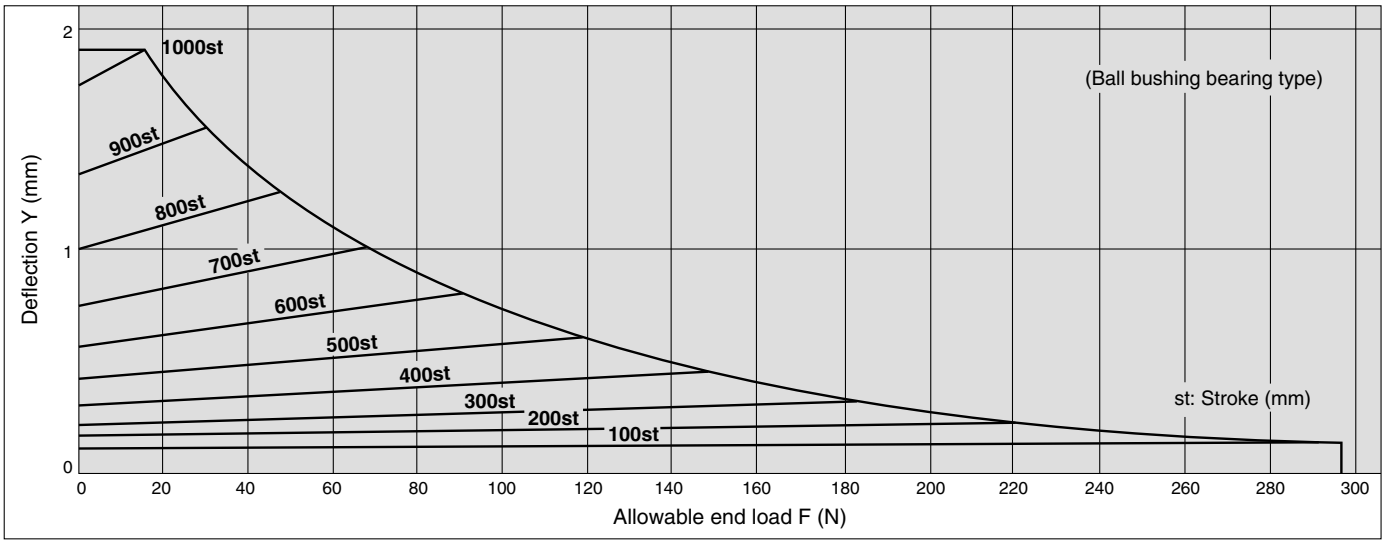

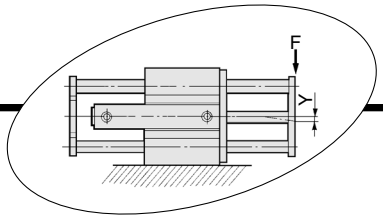

Slide Bearing
Allowable End Load and Deflection

MGGM□20-Stroke

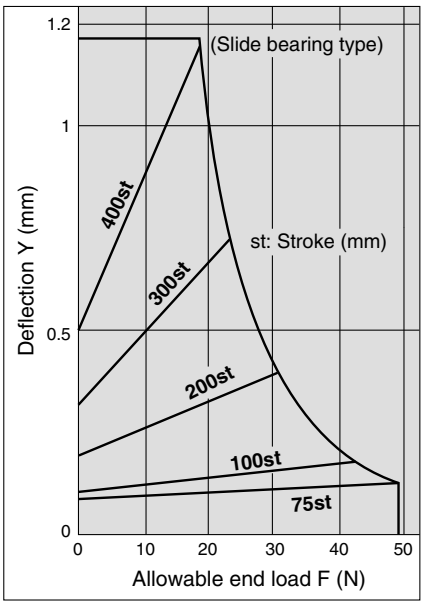

MGGM□25-Stroke

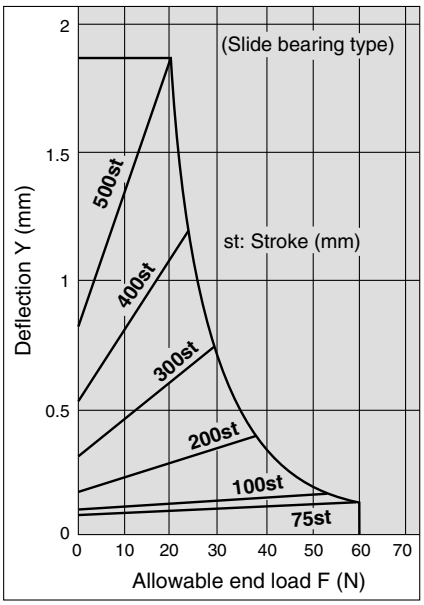

MGGM□32-Stroke

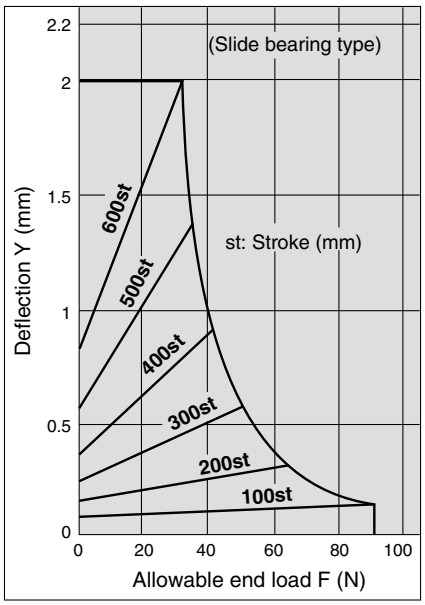

MGGM□40-Stroke

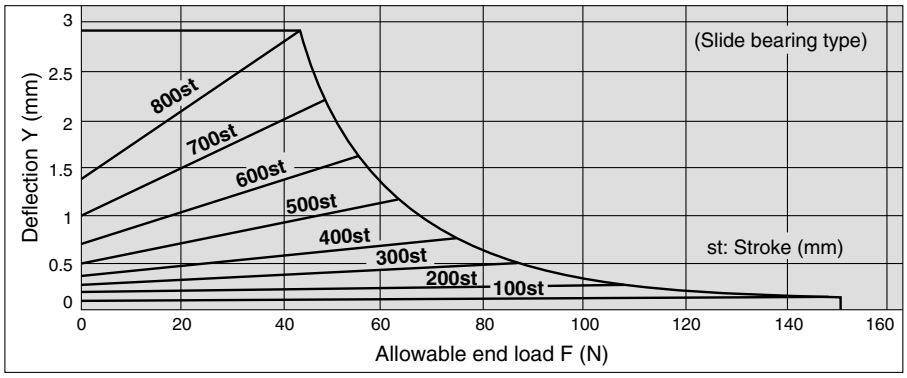

MGGM□50-Stroke

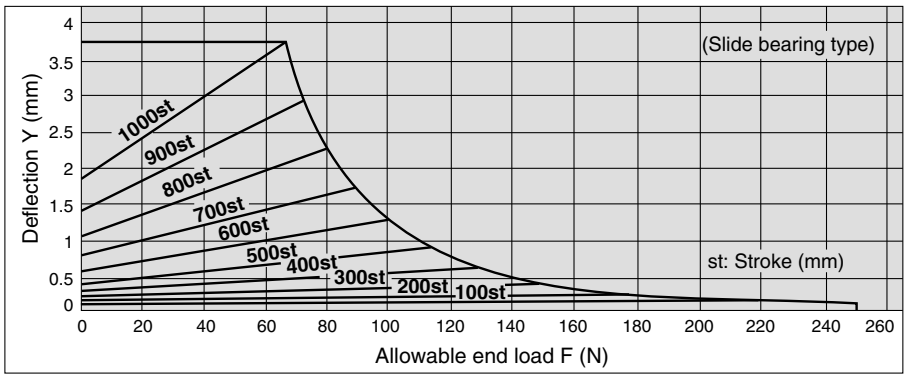

MGGM□63-Stroke

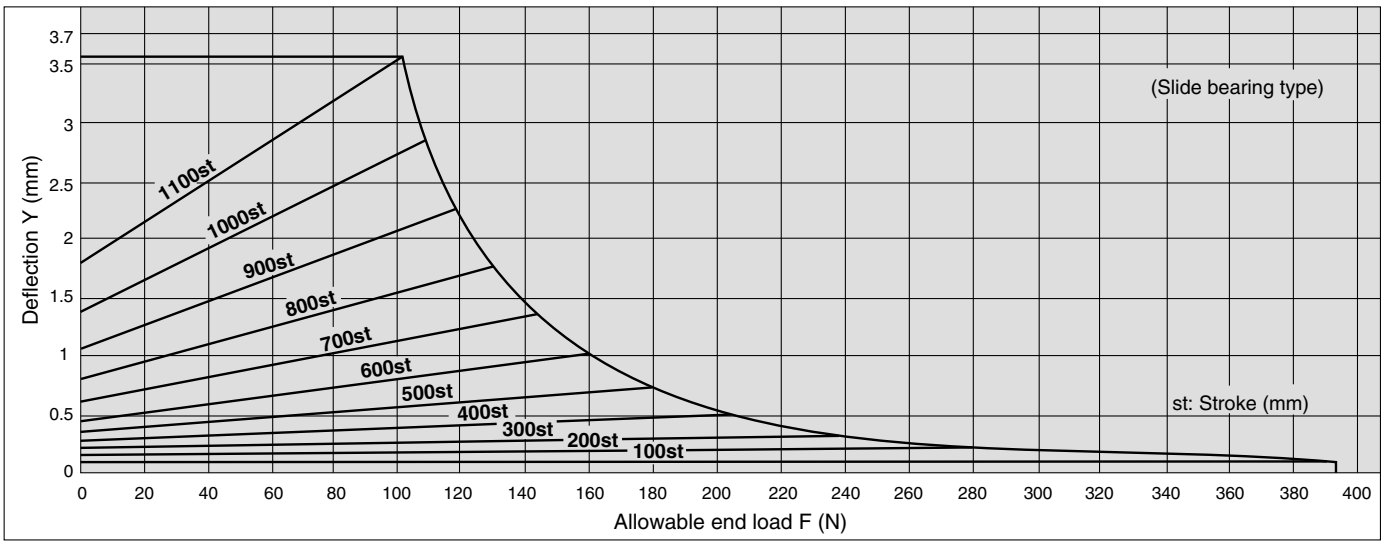

MGGM□80-Stroke

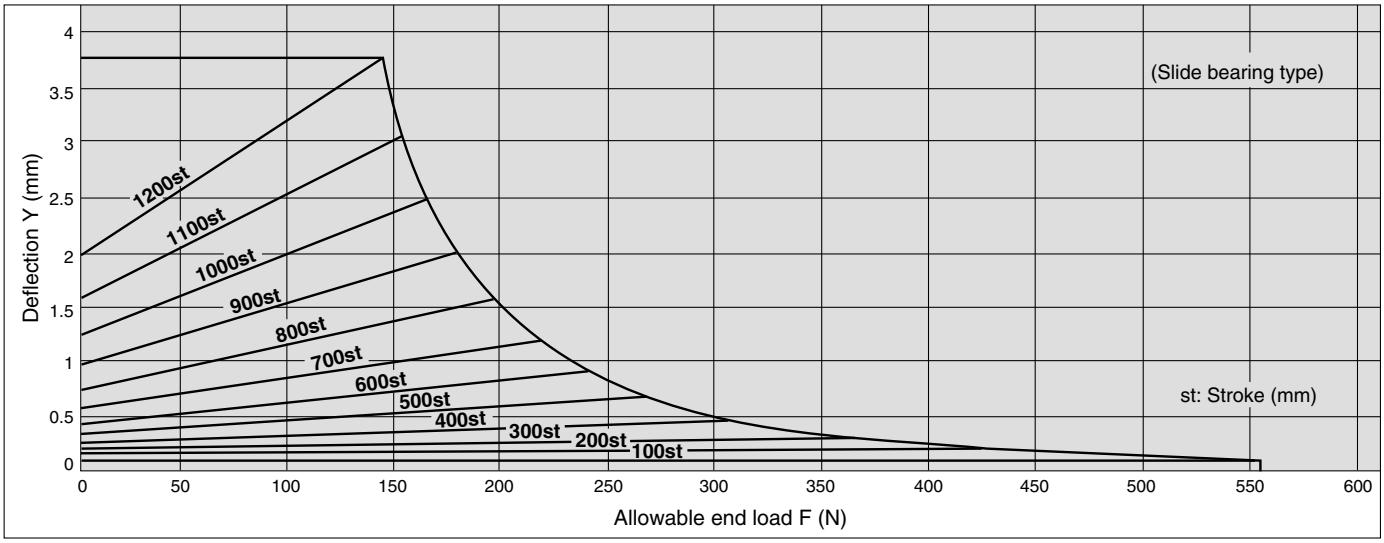

MGGM□100-Stroke

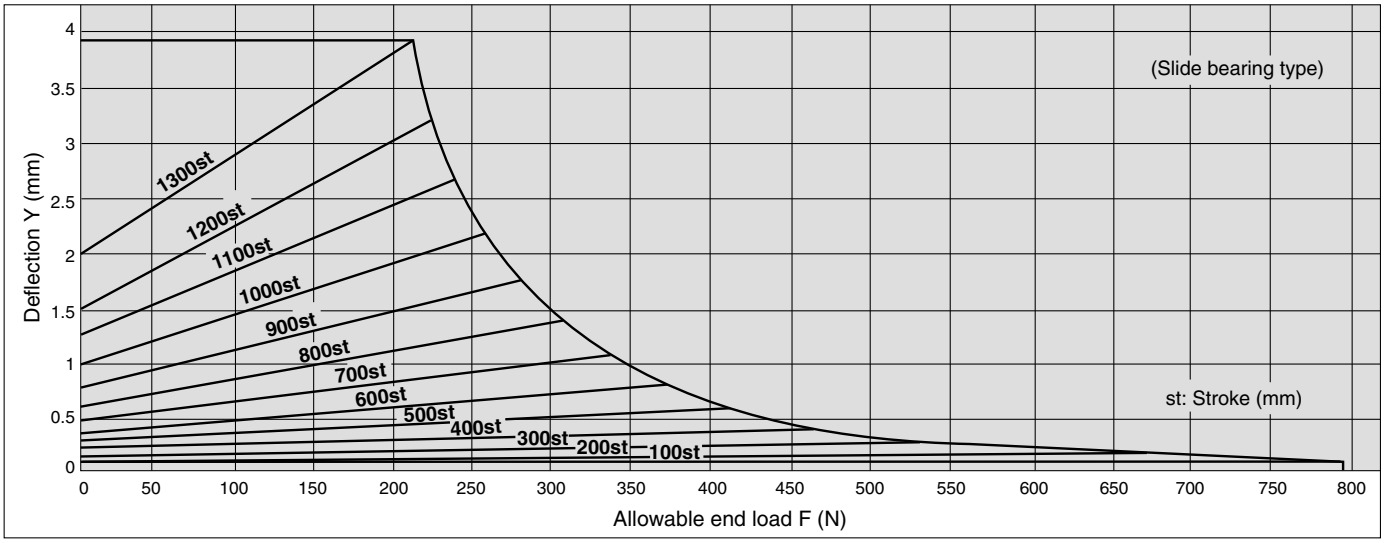

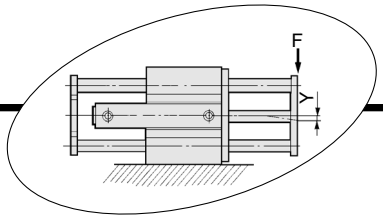

Ball Bushing Bearing
Allowable End Load and Deflection

MGGL□20-Stroke

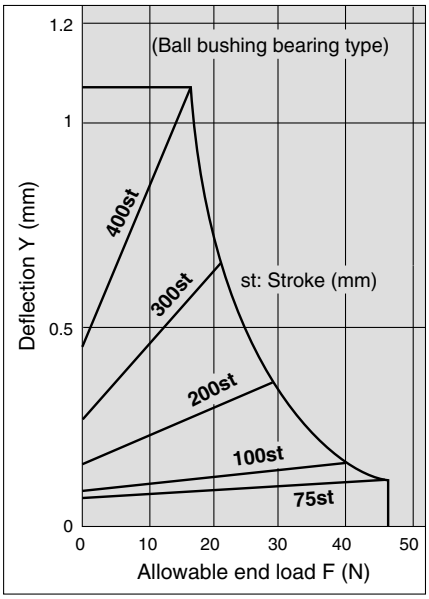

MGGL□25-Stroke

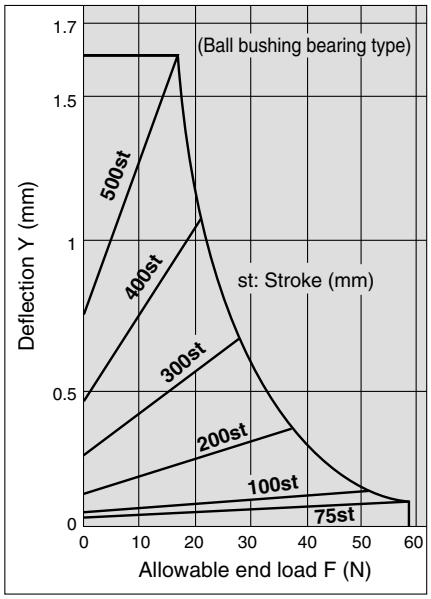

MGGL□32-Stroke

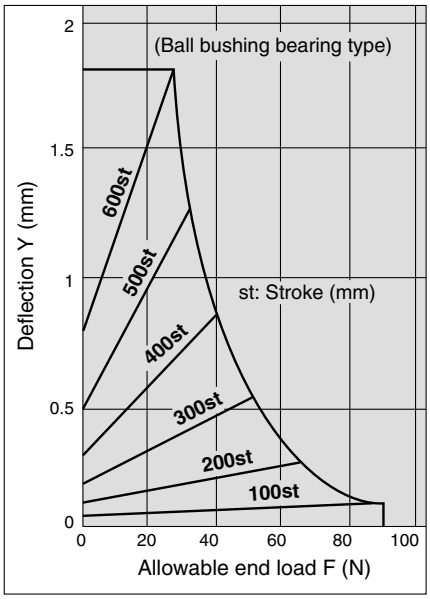

MGGL□40-Stroke

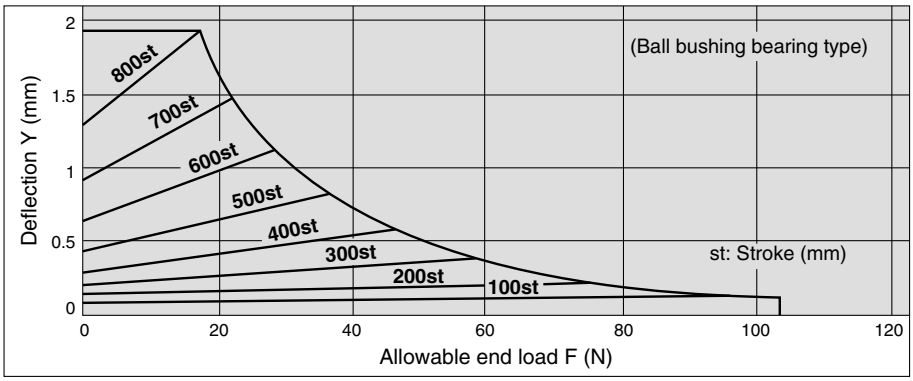

MGGL□50-Stroke

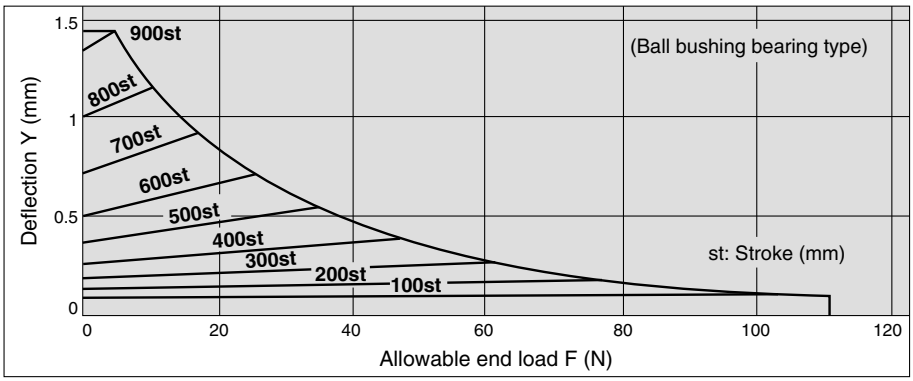

MGGL□63-Stroke

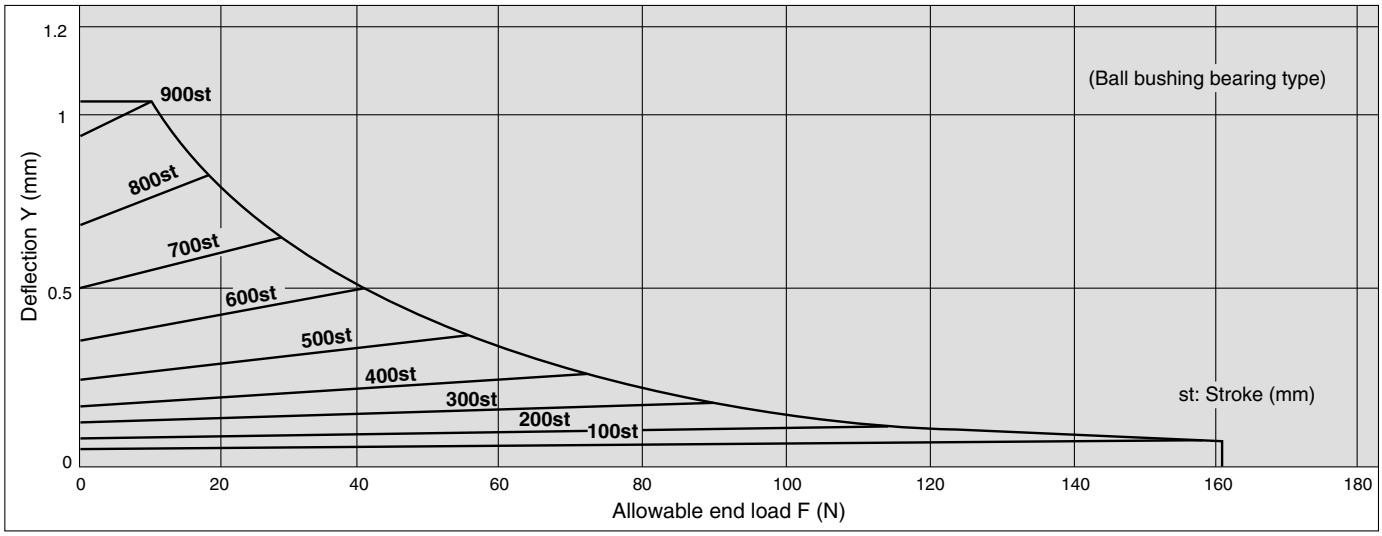

MGGL□80-Stroke

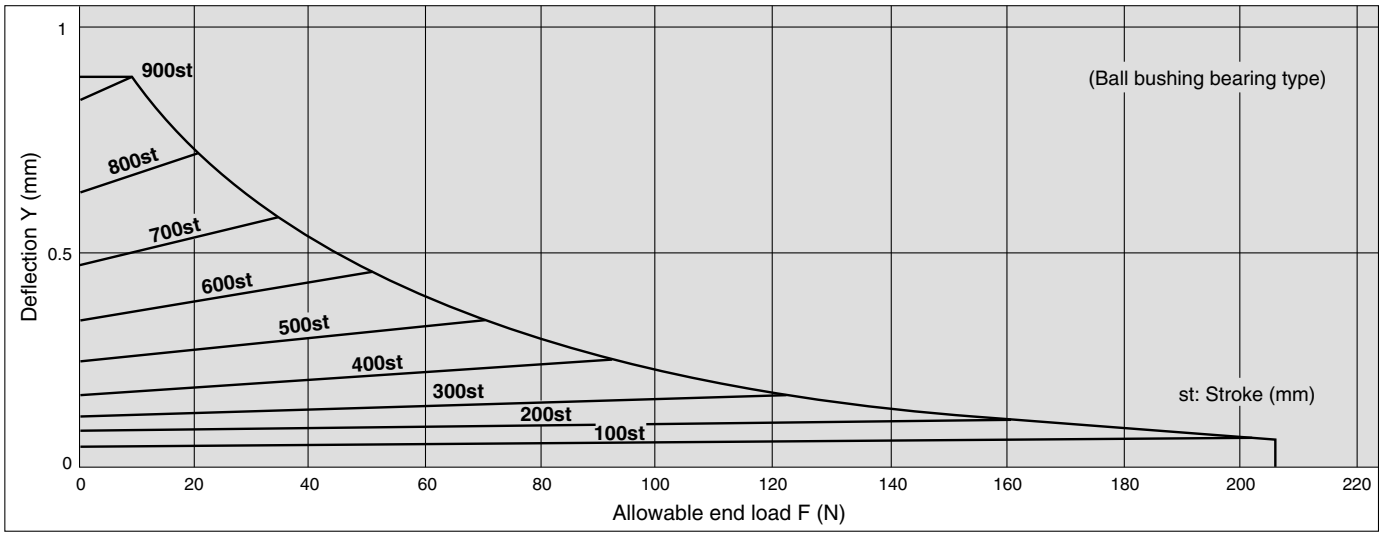

MGGL□100-Stroke

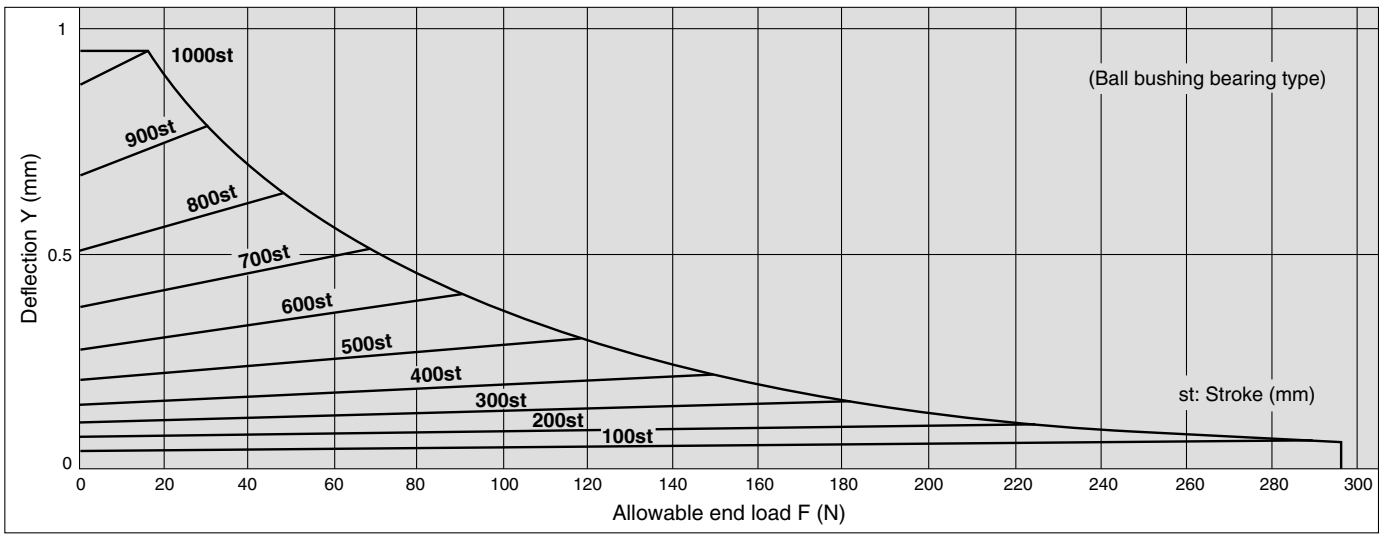

Allowable Eccentric Load

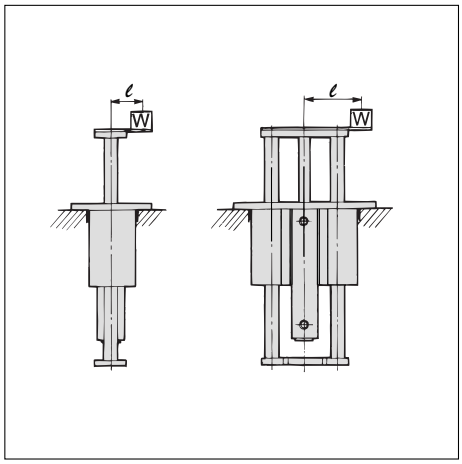

Slide Bearing: MGGM□□-Stroke

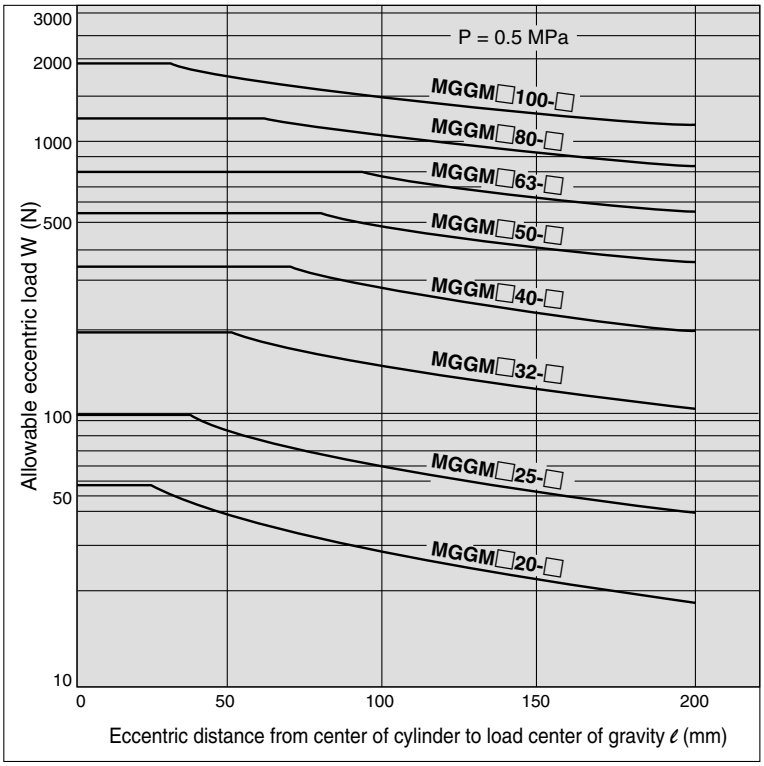

(Set the maximum allowable load so that it does not exceed the following percentages of the theoretical output: 35% for ø20, 40% for ø25, 50% for ø32, 55% for ø40 and ø50, and 50% for ø63, ø80 and ø100.)

Ball Bushing Bearing: MGGL□□-Stroke

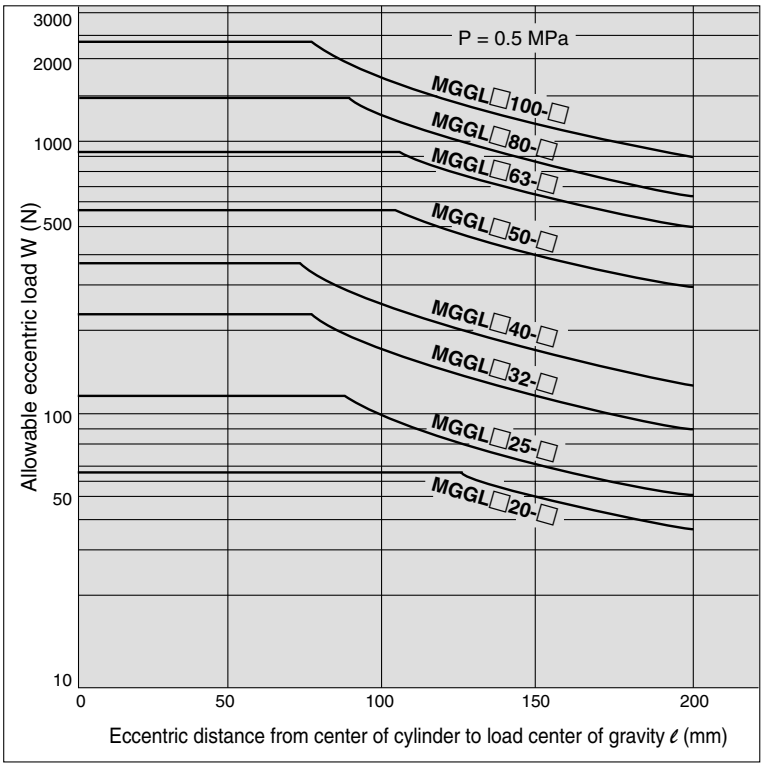

(Set the maximum allowable load so that it does not exceed the following percentages of the theoretical output: 40% for ø20, 50% for ø25, and 60% for ø32, ø40, ø50, ø63, ø80 and ø100.)

Construction

ø20 to ø50/MGG□□

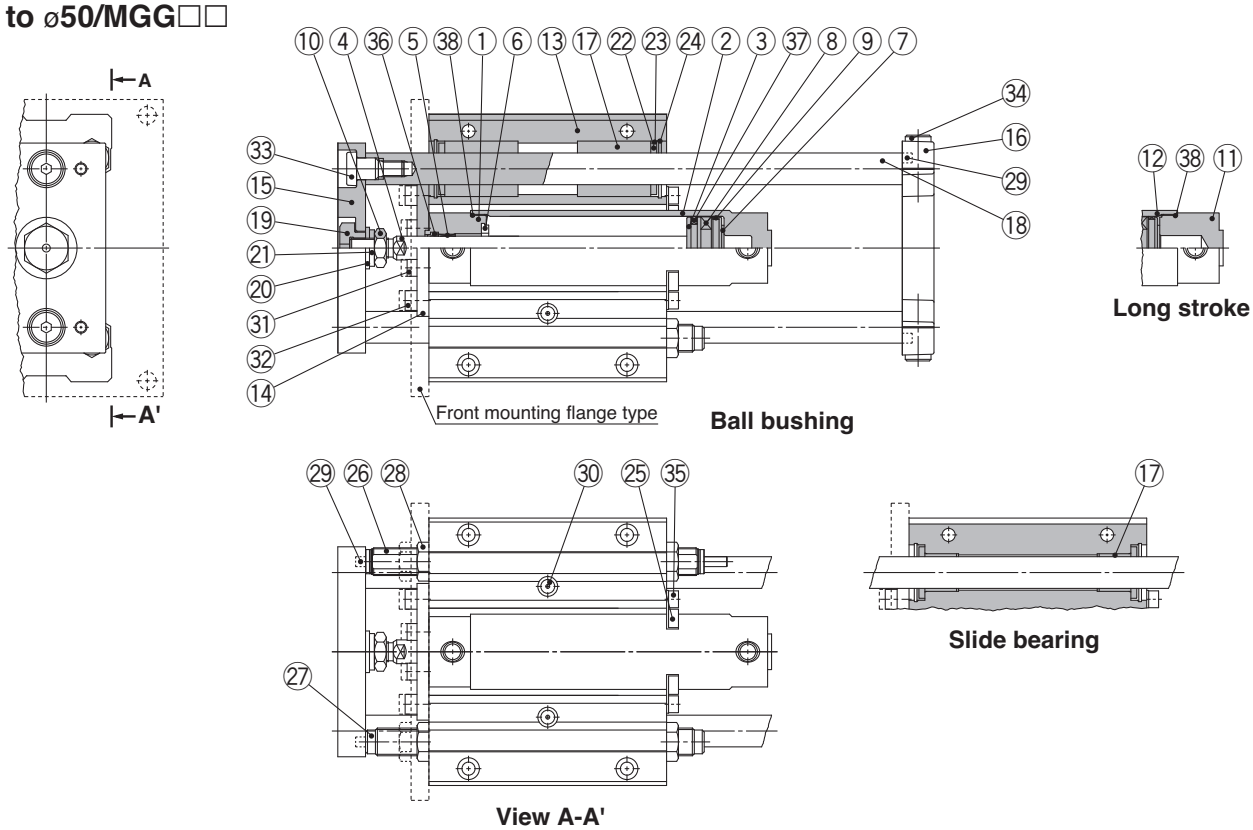

Component Parts

No.	Description	Material	Note	
1	**Rod cover**	Aluminum alloy	Hard anodized	
2	**Tube cover**	Aluminum alloy	Hard anodized	
3	**Piston**	Aluminum alloy		
4	**Piston rod**	Stainless steal	For ø20,ø25	
		Carbon steel	Hard chrome plating	For ø32 to ø100
5	**Bushing**	Bearing alloy		
6	**Bumper**	Urethane	ø32 or larger is common.	
7	**Bumper**	Urethane		
8	**Magnet**	—		
9	**Wear ring**	Resin		
10	**Rod end nut**	Carbon steel	Zinc chromated	
11	**Head cover**	Aluminum alloy	Hard anodized	For long stroke
12	**Cylinder tube**	Aluminum alloy	Hard anodized	
13	**Guide body**	Aluminum alloy	Anodized	
14	**Small flange**	Carbon steel	Nickel plating	For basic type
	Large flange	Carbon steel	Nickel plating	For front mounting flange type
15	**Front plate**	Carbon steel	Nickel plating	
16	**Rear plate**	Cast iron	Painted	
17	**Slide bearing**	Bearing alloy	For slide bearing	
	Ball bushing	—	For ball bushing	
18	**Guide rod**	Carbon steel	Hard chrome plating	For slide bearing
		Carbon steel	Quenched, hard chrome plating	For ball bushing
19	**End bracket**	Carbon steel	Nickel plating	
20	**Flat washer**	Carbon steel	Zinc chromated	
21	**Spring washer**	Carbon steel	Zinc chromated	
22	**Felt**	Felt		
23	**Holder**	Stainless steal		
24	Type C retaining ring for hole	Carbon tool steel	Phosphate coated	
25	**Bracket**	Stainless steal		
26	**Shock absorber**	—		
27	**Adjustment bolt**	Carbon steel	Nickel plating	
28	**Nut**	Carbon steel	Nickel plating	
29	**Parallel pin**	Carbon steel	Quenched, nickel plating	
30	**Nipple**	—	Nickel plating	
31	Hexagon socket head cap screw	Carbon steel	Zinc chromated	For cylinder mounting
32	Hexagon socket head cap screw	Carbon steel	Zinc chromated	For large/small flange mounting

Component Parts

No.	Description	Material	Note	
33	**Guide bolt**	Carbon steel	Nickel plating	For front plate mounting
34	Hexagon socket head cap screw	Carbon steel	Zinc chromated	For rear plate mounting
35	Hexagon socket head cap screw	Carbon steel	Zinc chromated	For bracket mounting
36	**Rod seal**	NBR		
37	**Piston seal**	NBR		
38	**Tube gasket**	NBR		

Replacement Parts: Seal Kit

Bore size (mm)	Kit no.	Contents
20	**CG1N20Z-PS**	Set of nos. above ㊱, ㊲, ㊳.
25	**CG1N25Z-PS**	
32	**CG1N32Z-PS**	
40	**CG1N40Z-PS**	

Note) Refer to the following precautions for disassembly/replacement. Order with the kit number according to the bore size.

∗ Seal kit includes a grease pack (10 g). Order with the following part number when only the grease pack is needed.
Grease pack part no.: GR-S-010 (10 g)

⚠ Caution

1. Do not replace the bushings.

2. To replace a seal, apply grease to the new seal before installing it. If the cylinder is put into operation without applying grease to the seal, it could cause the seal to wear significantly, leading to premature air leakage.

3. Basic cylinders with a bore size of ø50 cannot be disassembled. When disassembling cylinders with bore sizes of ø20 through ø40, grip the double flat part of either the tube cover or the rod cover with a vise and loosen the other side with a wrench or a monkey wrench etc., and then remove the cover. When retightening, tighten approximately 2 degrees more than the original position. (Cylinders with ø50 or larger bore sizes are tightened with a large tightening torque and cannot be disassembled. If disassembly is required, please contact SMC.)

Construction

ø63 to ø100/MGG□B

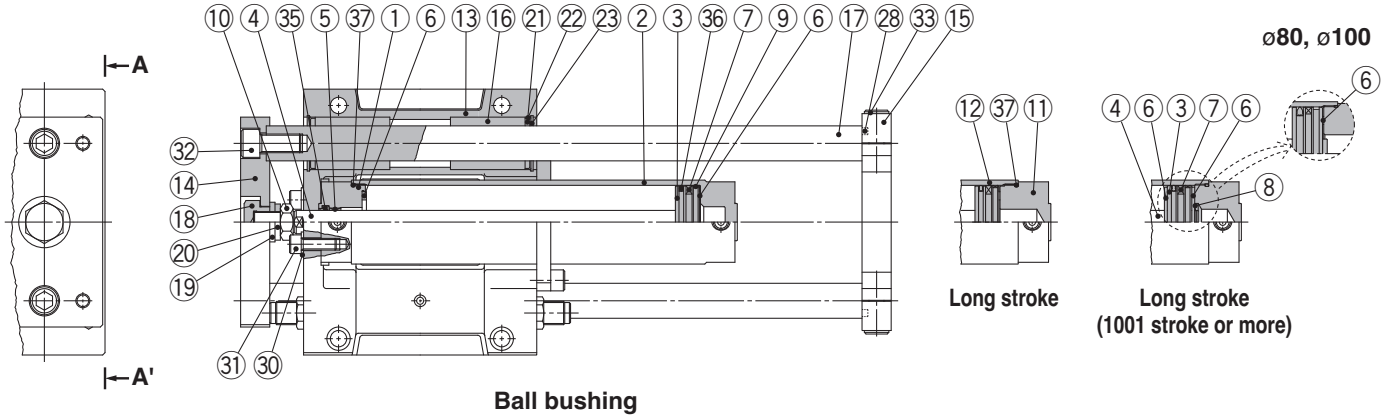

Ball bushing

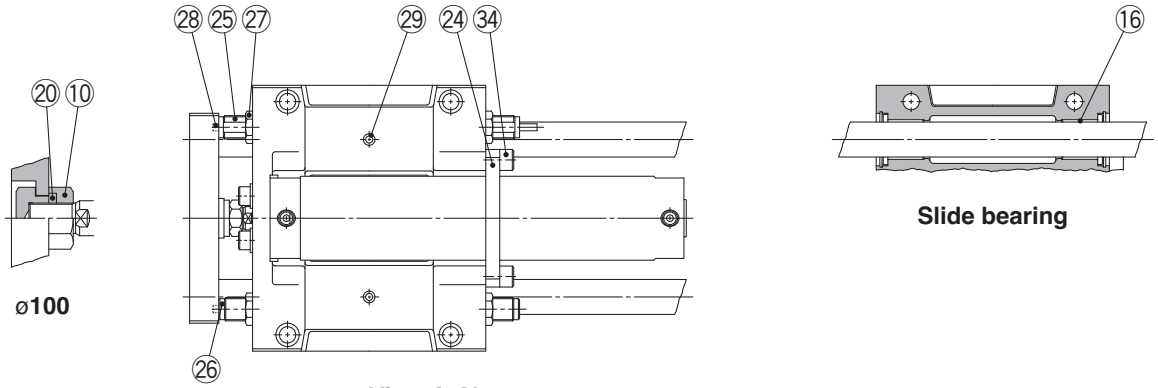

View A-A'

Component Parts

No.	Description	Material	Note	
1	**Rod cover**	Aluminum alloy	Hard anodized	
2	**Tube cover**	Aluminum alloy	Hard anodized	
3	**Piston**	Aluminum alloy		
4	**Piston rod**	Carbon steel	Hard chrome plating	
5	**Bushing**	Bearing alloy		
6	**Bumper**	Urethane		
7	**Magnet**	—		
8	**Retaining ring**	Stainless steal	For ø63 with 1001 stroke or more	
9	**Wear ring**	Resin		
10	**Rod end nut**	Carbon steel	Zinc chromated	
11	**Head cover**	Aluminum alloy	Hard anodized	For long stroke
12	**Cylinder tube**	Aluminum alloy	Hard anodized	
13	**Guide body**	Aluminum alloy	Painted	
14	**Front plate**	Carbon steel	Nickel plating	
15	**Rear plate**	Cast iron	Painted	
16	**Slide bearing**	Bearing alloy	For slide bearing	
	Ball bushing	—	For ball bushing	
17	**Guide rod**	Carbon steel	Hard chrome plating	For slide bearing
		Carbon steel	Quenched, hard chrome plating	For ball bushing
18	**End bracket**	Carbon steel	Nickel plating	
19	**Flat washer**	Carbon steel	Zinc chromated	Not required for ø100
20	**Spring washer**	Carbon steel	Zinc chromated	
21	**Felt**	Felt		

Component Parts

No.	Description	Material	Note	
22	**Holder**	Carbon steel	Nickel plating	
23	**Type C retaining ring for hole**	Carbon tool steel	Phosphate coated	
24	**Bracket**	Aluminum alloy	Anodized	
25	**Shock absorber**	—		
26	**Adjustment bolt**	Carbon steel	Nickel plating	
27	**Nut**	Carbon steel	Nickel plating	
28	**Parallel pin**	Carbon steel	Zinc chromated	
29	**Nipple**	—	Nickel plating	
30	**Flat washer**	Carbon steel	Zinc chromated	
31	**Hexagon socket head cap screw**	Carbon steel	Zinc chromated	For cylinder mounting
32	**Hexagon socket head cap screw**	Carbon steel	Zinc chromated	For front plate mounting
33	**Hexagon socket head cap screw**	Carbon steel	Zinc chromated	For rear plate mounting
34	**Hexagon socket head cap screw**	Carbon steel	Zinc chromated	For bracket mounting
35	**Rod seal**	NBR		
36	**Piston seal**	NBR		
37	**Tube gasket**	NBR		

⚠ Caution

Cylinders with ø50 or larger bore sizes are tightened with a large tightening torque and cannot be disassembled. If disassembly is required, please contact SMC.

Construction

ø63 to ø100/MGG□F

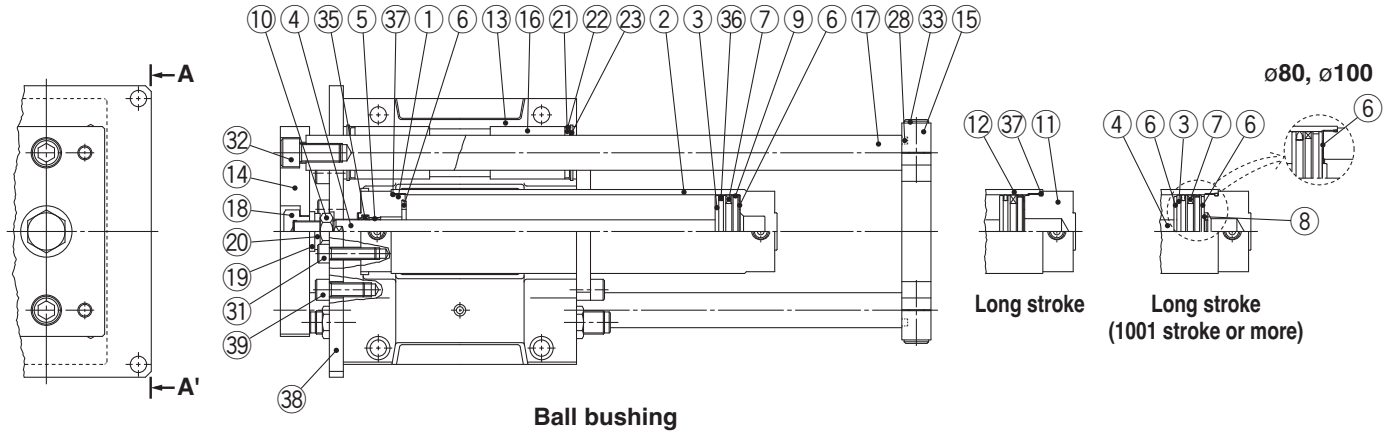

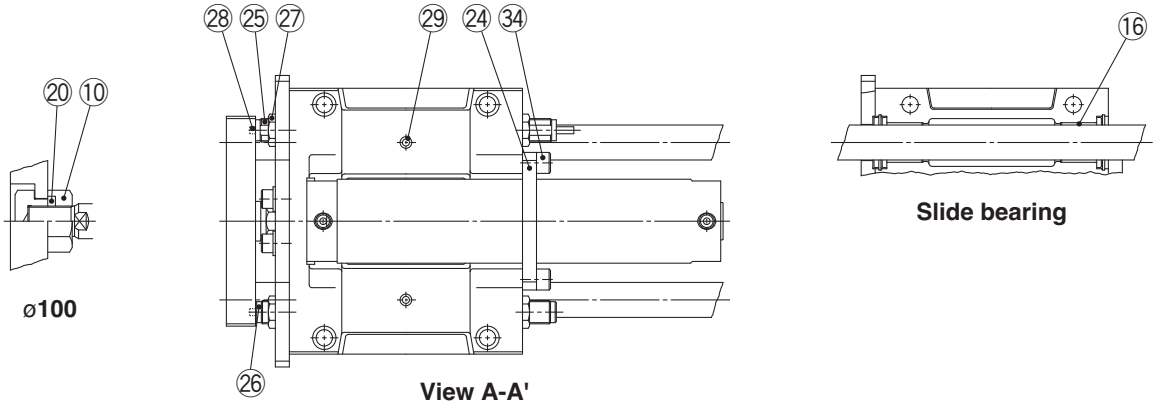

Component Parts

No.	Description	Material	Note	
1	**Rod cover**	Aluminum alloy	Hard anodized	
2	**Tube cover**	Aluminum alloy	Hard anodized	
3	**Piston**	Aluminum alloy		
4	**Piston rod**	Carbon steel	Hard chrome plating	
5	**Bushing**	Bearing alloy		
6	**Bumper**	Urethane		
7	**Magnet**	—		
8	**Retaining ring**	Stainless steal	For ø63 with 1001 stroke or more	
9	**Wear ring**	Resin		
10	**Rod end nut**	Carbon steel	Zinc chromated	
11	**Head cover**	Aluminum alloy	Hard anodized	For long stroke
12	**Cylinder tube**	Aluminum alloy	Hard anodized	
13	**Guide body**	Aluminum alloy	Painted	
14	**Front plate**	Carbon steel	Nickel plating	
15	**Rear plate**	Cast iron	Painted	
16	**Slide bearing**	Bearing alloy	For slide bearing	
	Ball bushing	—	For ball bushing	
17	**Guide rod**	Carbon steel	Hard chrome plating	For slide bearing
		Carbon steel	Quenched, hard chrome plating	For ball bushing
18	**End bracket**	Carbon steel	Nickel plating	
19	**Flat washer**	Carbon steel	Zinc chromated	Not required for ø100
20	**Spring washer**	Carbon steel	Zinc chromated	
21	**Felt**	Felt		
22	**Holder**	Carbon steel	Nickel plating	

Component Parts

No.	Description	Material	Note	
23	**Type C retaining ring for hole**	Carbon tool steel	Phosphate coated	
24	**Bracket**	Aluminum alloy	Anodized	
25	**Shock absorber**	—		
26	**Adjustment bolt**	Carbon steel	Nickel plating	
27	**Nut**	Carbon steel	Nickel plating	
28	**Parallel pin**	Carbon steel	Zinc chromated	
29	**Nipple**	—	Nickel plating	
30	—	—		
31	**Hexagon socket head cap screw**	Carbon steel	Zinc chromated	For cylinder mounting
32	**Hexagon socket head cap screw**	Carbon steel	Zinc chromated	For front plate mounting
33	**Hexagon socket head cap screw**	Carbon steel	Zinc chromated	For rear plate mounting
34	**Hexagon socket head cap screw**	Carbon steel	Zinc chromated	For bracket mounting
35	**Rod seal**	NBR		
36	**Piston seal**	NBR		
37	**Tube gasket**	NBR		
38	**Large flange**	Carbon steel	Nickel plating	
39	**Hexagon socket head cap screw**	Carbon steel	Zinc chromated	For large flange mounting

⚠ Caution

Cylinders with ø50 or larger bore sizes are tightened with a large tightening torque and cannot be disassembled. If disassembly is required, please contact SMC.

Dimensions

Basic: MGG□B
ø20 to ø50

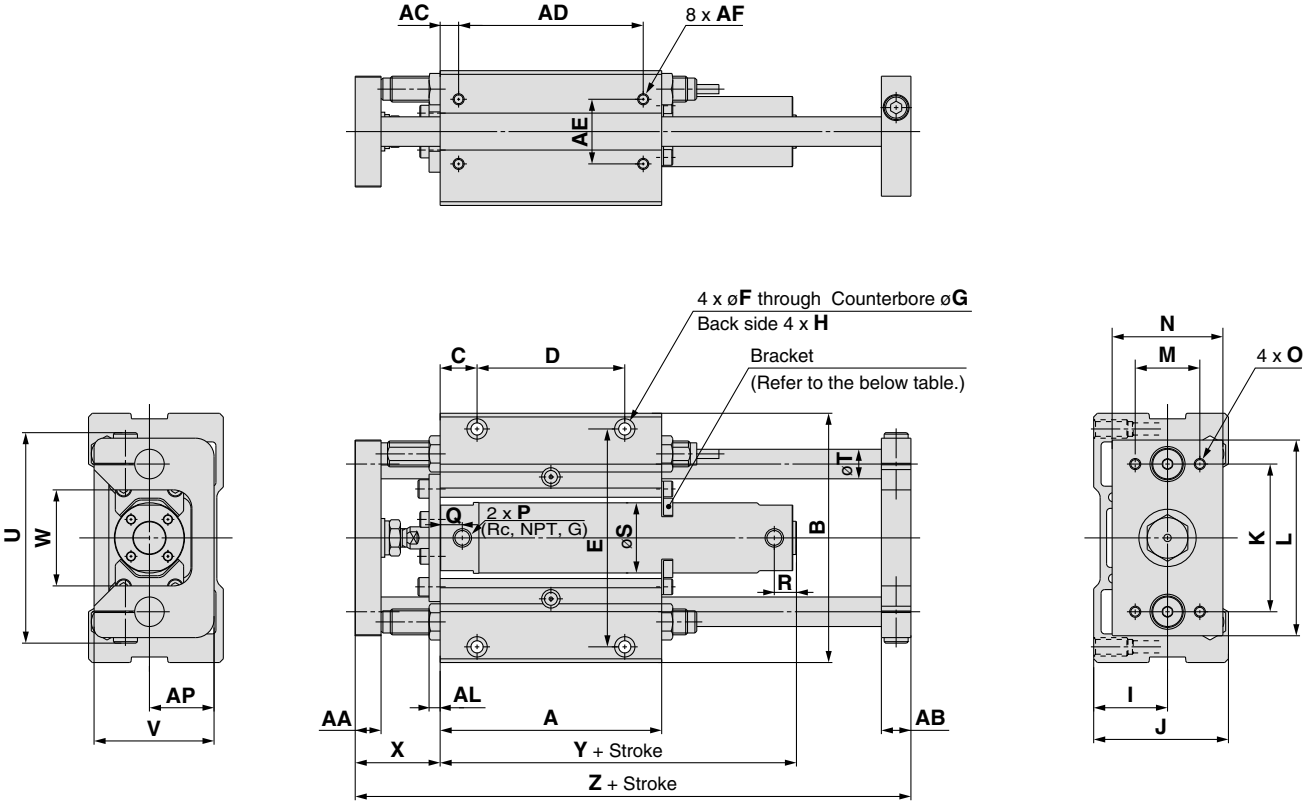

(mm)

Bore size (mm)	Stroke range (mm)	A	AA	AB	AC	AD	AE	AF	AL	AP	B	C	D	E	F	G	H	I	J	K	L	M	N
20	75, 100, 125, 150, 200	90	11	11	7.5	75	30	M5 depth 10	6	25	108	15	60	92	5.5	9.5 depth 6	M8 depth 14	30	55	60	80	25	45
25	75, 100, 125, 150, 200, 250, 300	100	14	13	7.5	85	30	M6 depth 12	6	30	130	17.5	65	113	6.6	11 depth 8	M10 depth 18	35	65	70	100	35	54
32		120	14	16	10	100	35	M6 depth 12	6	35	135	20	80	118	6.6	11 depth 8	M10 depth 18	40	73	80	106	35	60
40		140	17	19	10	120	40	M8 depth 16	9	45	170	20	100	150	9	14 depth 10	M12 depth 21	50	93	95	134	50	75
50		170	23	21	10	150	45	M10 depth 20	9	50	194	25	120	170	11	17 depth 12	M14 depth 25	55	103	115	152	56	90

Bore size (mm)	O	P Note)	Q	R	S	T	U	V	W	X	Y	Z
20	M6 depth 9	1/8	12	12	26	12	82	48	40	39	71	157
25	M6 depth 13	1/8	12	12	31	13	100	57	46	46	71	175
32	M6 depth 13	1/8	12	12	38	16	114	65	52	46	73	201
40	M8 depth 16	1/8	13	12	47	20	138	84	62	56	80	238
50	M10 depth 21	1/4	14	14	58	25	164	94	75	67	92	285

Note) Rc, NPT, G port are available.

Long Stroke

Bore size (mm)	Stroke range (mm)	R	Y
20	250 to 400	14	79
25	350 to 500	14	79
32	350 to 600	14	81
40	350 to 800	15	89
50	350 to 1000	16	104

Bracket Mounting Stroke

Bore size (mm)	Bracket mounting stroke
20	100 st or more
25	125 st or more
32	150 st or more
40	200 st or more
50	250 st or more

Dimensions

Basic: MGG□B
ø63 to ø100

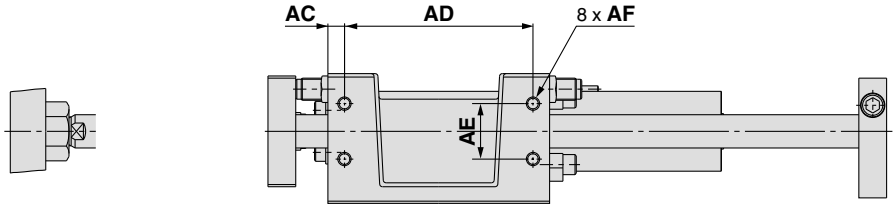

ø100 piston rod end connection

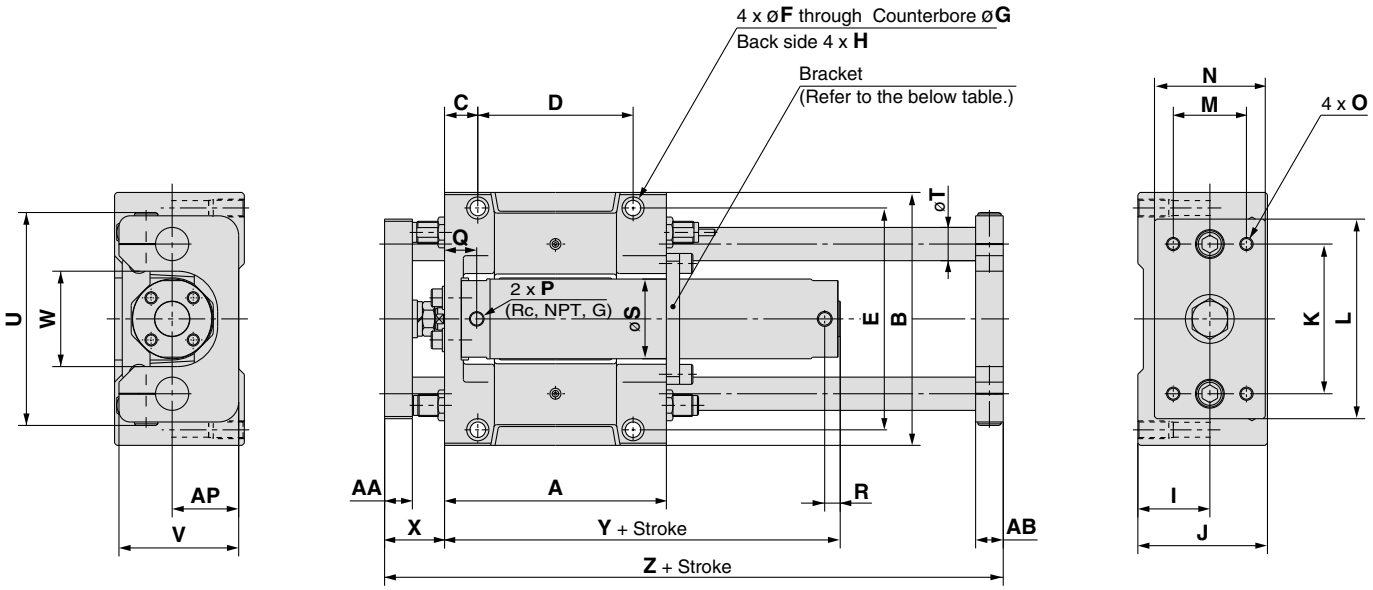

(mm)

Bore size (mm)	Stroke range (mm)	A	AA	AB	AC	AD	AE	AF	AP	B	C	D	E	F	G	H	I	J	K	L	M	N
63	75, 100 125, 150 200, 250 300	200	25	25	15	170	50	M12 depth 24	60	228	30	140	200	13.5	20 depth 14.5	M16 depth 28	65	117	135	180	66	100
80		230	30	27	15	200	55	M12 depth 24	70	262	30	170	234	13.5	20 depth 14.5	M16 depth 28	75	138	160	214	76	115
100		280	32	30	17.5	245	70	M14 depth 28	80	304	35	210	274	15	23 depth 17	M18 depth 32	85	153	190	245	80	125

Bore size (mm)	O	P Note)	Q	R	S	T	U	V	W	X	Y	Z
63	M12 depth 23	1/4	29	14	72	30	192	108	86	54	107	308
80	M12 depth 28	3/8	40	19	89	35	224	128	104	66	131	355
100	M14 depth 30	1/2	40	19	110	40	262	143	128	66	131	410

Note) Rc, NPT, G port are available.

Long Stroke

Bore size (mm)	Stroke range (mm)	R	Y
63	350 to 1100	16	119
80	350 to 1200	23	145
100	350 to 1300	23	145

Bracket Mounting Stroke

Bore size (mm)	Bracket mounting stroke
63	300 st or more
80	400 st or more
100	500 st or more

Dimensions

Front mounting flange: MGG□F
ø20 to ø50

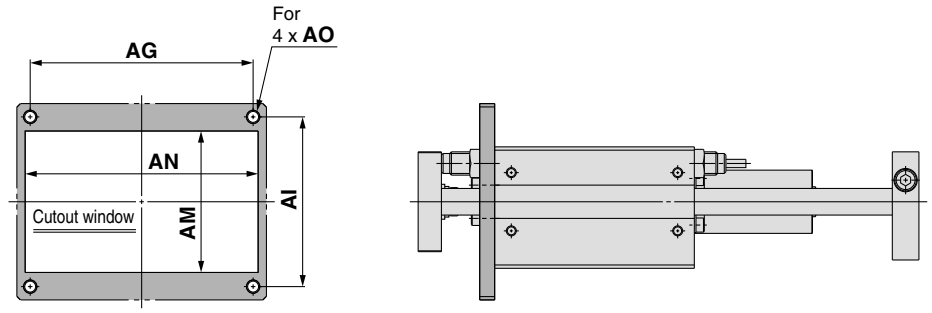

Mounting dimensions

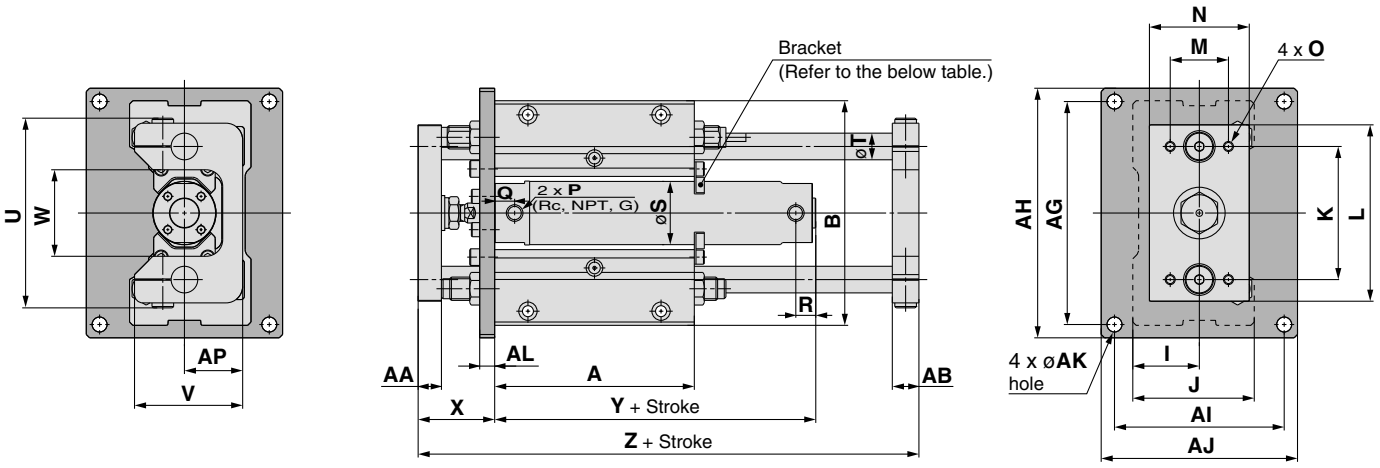

(mm)

Bore size (mm)	Stroke range (mm)	A	AA	AB	AG	AH	AI	AJ	AK	AL	AM	AN	AO	AP	B	I	J	K	L	M	N	O
20	75, 100, 125, 150, 200	90	11	11	112	125	82	95	6.6	9	65	115	M6	25	108	30	55	60	80	25	45	M6 depth 9
25	75, 100 125, 150 200, 250 300	100	14	13	134	150	92	108	9	9	75	135	M8	30	130	35	65	70	100	35	54	M6 depth 13
32		120	14	16	134	150	102	118	9	9	85	140	M8	35	135	40	73	80	106	35	60	M6 depth 13
40		140	17	19	170	186	134	150	9	12	105	175	M8	45	170	50	93	95	134	50	75	M8 depth 16
50		170	23	21	190	210	140	160	11	12	115	200	M10	50	194	55	103	115	152	56	90	M10 depth 21

Bore size (mm)	P Note)	Q	R	S	T	U	V	W	X	Y	Z
20	1/8	12	12	26	12	82	48	40	39	71	157
25	1/8	12	12	31	13	100	57	46	46	71	175
32	1/8	12	12	38	16	114	65	52	46	73	201
40	1/8	13	12	47	20	138	84	62	56	80	238
50	1/4	14	14	58	25	164	94	75	67	92	285

Note) Rc, NPT, G ports are available.

Long Stroke

Bore size (mm)	Stroke range (mm)	R	Y
20	250 to 400	14	79
25	350 to 500	14	79
32	350 to 600	14	81
40	350 to 800	15	89
50	350 to 1000	16	104

Bracket Mounting Stroke

Bore size (mm)	Bracket mounting stroke
20	100 st or more
25	125 st or more
32	150 st or more
40	200 st or more
50	250 st or more

Dimensions

Front mounting flange: MGG□F
ø63 to ø100

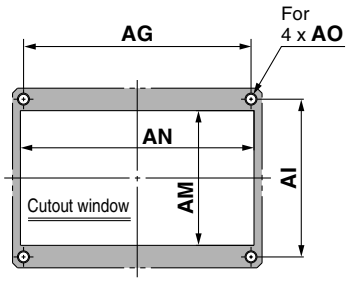

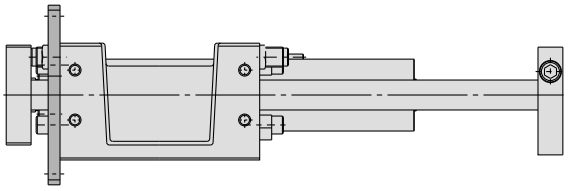



ø100 piston rod end connection

Mounting dimensions

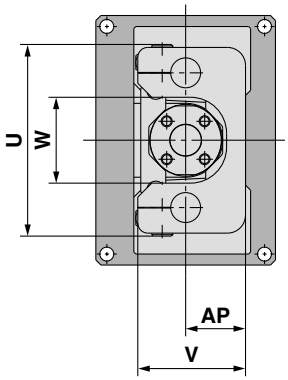

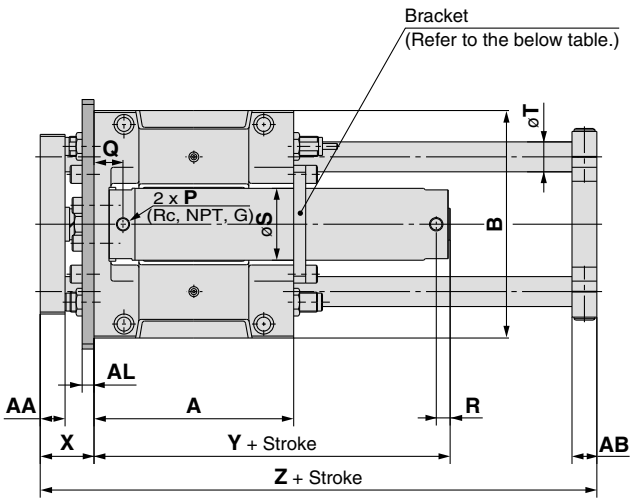

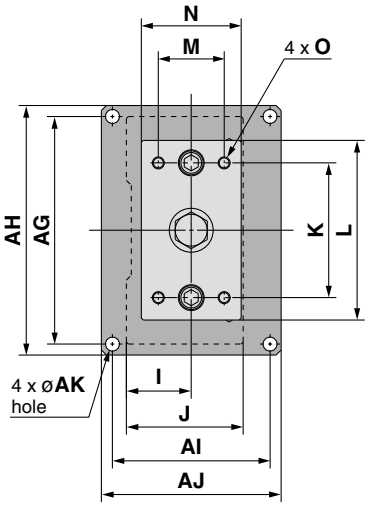

(mm)

Bore size (mm)	Stroke range (mm)	A	AA	AB	AG	AH	AI	AJ	AK	AL	AM	AN	AO	AP	B	I	J	K	L	M	N	O	P Note)
63	75, 100 125, 150 200, 250 300	200	25	25	228	250	158	180	14	12	135	234	M12	60	228	65	117	135	180	66	100	M12 depth 23	1/4
80		230	30	27	262	284	178	200	14	16	155	268	M12	70	262	75	138	160	214	76	115	M12 depth 28	3/8
100		280	32	30	300	326	200	226	16	16	175	310	M14	80	304	85	153	190	245	80	125	M14 depth 30	1/2

Bore size (mm)	Q	R	S	T	U	V	W	X	Y	Z
63	29	14	72	30	192	108	86	54	107	308
80	40	19	89	35	224	128	104	66	131	355
100	40	19	110	40	262	143	128	66	131	410

Long Stroke

Bore size (mm)	Stroke range (mm)	R	Y
63	350 to 1100	16	119
80	350 to 1200	23	145
100	350 to 1300	23	145

Bracket Mounting Stroke

Bore size (mm)	Bracket mounting stroke
63	300 st or more
80	400 st or more
100	500 st or more

Note) Rc, NPT, G ports are available.

Guide Cylinder With End Lock

Series MGG

ø20, ø25, ø32, ø40, ø50, ø63, ø80, ø100

How to Order

MGG L B 32 □ – 100 – H N – M9BW □ – C – □

Guide Cylinder

Bearing type

M	Slide bearing
L	Ball bushing bearing

Mounting type

B	Basic type
F	Front mounting flange type

Bore size

20	20 mm	50	50 mm
25	25 mm	63	63 mm
32	32 mm	80	80 mm
40	40 mm	100	100 mm

Port thread type

–	Rc
TN	NPT
TF	G

Cylinder stroke (mm)
Refer to "Standard Stroke" on page 25.

Lock position

H	Head end lock
R	Rod end lock

Manual release type

N	Non-lock type
L	Lock type

Auto switch

–	Without auto switch (Built-in magnet)

∗ For the applicable auto switch model, refer to the table below.

Number of auto switches

–	2 pcs.
S	1 pc.
n	"n" pcs.

Auto switch mounting bracket Note)
Note) This symbol is indicated when the D-A9□ or M9□ type auto switch is specified. This mounting bracket does not apply to other auto switches (D-C7□ and H7□, etc.) (Nil)

Made to Order
Refer to page 26 for details.

Applicable Auto Switches/For detailed auto switch specifications, refer to page 56 through to 70.

Type	Special function	Electrical entry	Indicator light	Wiring (Output)	Auto switch model DC	Auto switch model AC	Applicable bore (mm) ø20 to ø63 Perpendicular	ø20 to ø63 In-line	ø80, ø100 In-line	Lead wire length (m) 0.5 (Nil)	1 (M)	3 (L)	5 (Z)	None (N)	Pre-wired connector	Applicable load	
Solid state auto switch	–	Grommet	Yes	3-wire (NPN)	5 V,12 V	–	M9NV	M9N	–	●	●	●	○	–	○	IC circuit	Relay, PLC
							–	–	G59	●	–	●	○	–	○		
				3-wire (PNP)			M9PV	M9P	–	●	●	●	○	–	○		
							–	–	G5P	●	–	●	○	–	○		
				2-wire	12 V		M9BV	M9B	–	●	●	●	○	–	○	–	
							–	–	K59	●	–	●	○	–	○		
		Connector					–	H7C	–	●	–	●	●	●	–		
	Diagnostic indication (2-color indicator)	Grommet		3-wire (NPN)	24 V 5 V,12 V	–	M9NWV	M9NW	–	●	●	●	○	–	○	IC circuit	
							–	–	G59W	●	–	●	○	–	○		
				3-wire (PNP)			M9PWV	M9PW	–	●	●	●	○	–	○		
							–	–	G5PW	●	–	●	○	–	○		
				2-wire	12 V		M9BWV	M9BW	–	●	●	●	○	–	○	–	
							–	–	K59W	●	–	●	○	–	○		
	Water resistant (2-color indicator)			3-wire (NPN)	5 V,12 V		M9NAV∗1	M9NA∗1	–	○	○	●	○	–	○	IC circuit	
				3-wire (PNP)			M9PAV∗1	M9PA∗1	–	○	○	●	○	–	○		
				2-wire	12 V		M9BAV∗1	M9BA∗1	–	○	○	●	○	–	○	–	
							–	–	G5BA∗1	–	–	●	○	–	○		
	With diagnostic output (2-color indicator)			4-wire (NPN)	5 V ,12 V		–	H7NF	G59F	●	–	●	○	–	○	IC circuit	
Reed auto switch	–	Grommet	Yes	3-wire (NPN equivalent)	–	5 V	–	A96V	A96	–	●	–	●	–	–	–	IC circuit	–
			No	2-wire	24 V	12 V	100 V	A93V∗2	A93	–	●	●	●	●	–	–	–	Relay, PLC
			No				100 V or less	A90V	A90	–	●	–	●	–	–	–	IC circuit	
			Yes				100 V, 200 V	–	B54		●	–	●	●	–	–	–	
			No				200 V or less	–	B64		●	–	●	–	–	–	–	
		Connector	Yes				–	–	C73C	–	●	–	●	●	●	–	–	
			No				24 V or less	–	C80C	–	●	–	●	●	●	–	IC circuit	
	Diagnostic indication (2-color indicator)	Grommet	Yes			–	–	–	B59W		●	–	●	–	–	–	–	

∗1 Water resistant type auto switches can be mounted on the above models, but in such case SMC cannot guarantee water resistance. Consult with SMC regarding water resistant types with the above model numbers.
∗2 1 m type lead wire is only applicable to D-A93.
∗ Lead wire length symbols: 0.5 m ·····— (Example) M9NW
1 m ····· M (Example) M9NWM
3 m ····· L (Example) M9NWL
5 m ····· Z (Example) M9NWZ
None····· N (Example) H7CN
∗ Solid state auto switches marked with "○" are produced upon receipt of order.
∗ Since there are other applicable auto switches than listed, refer to page 36 for details.
∗ For details about auto switches with pre-wired connector, refer to pages 1358 and 1359.
∗ D-A9□(V)/M9□(V)/M9□W(V)/M9□A(V) auto switches are shipped together (not assembled).
∗ (Only switch mounting brackets are assembled at the time of shipment.)

Caution
When using auto switches shown inside ( ), stroke end detection may not be possible depending on the One-touch fitting or speed controller model. Please contact SMC in this case.

Model / Specifications

JIS Symbol Rubber bumper

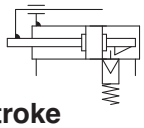

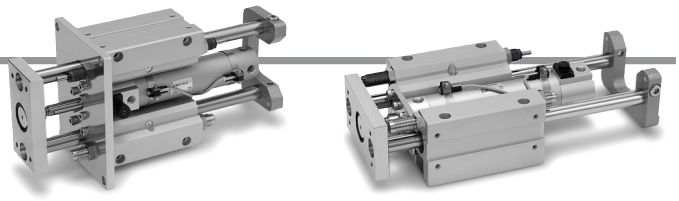

Standard Stroke

Model (Bearing type)	Bore size (mm)	Standard stroke (mm)	Long stroke (mm)
MGGM (Slide bearing) **MGGL (Ball bushing bearing)**	**20**	75, 100, 125, 150, 200	250, 300, 350, 400
	25	75, 100, 125, 150, 200, 250, 300	350, 400, 450, 500
	32		350, 400, 450, 500, 600
	40		350, 400, 450, 500, 600, 700, 800
	50		350, 400, 450, 500, 600, 700, 800, 900, 1000
	63		350, 400, 450, 500, 600, 700, 800, 900, 1000, 1100
	80		350, 400, 450, 500, 600, 700, 800, 900, 1000, 1100, 1200
	100		350, 400, 450, 500, 600, 700, 800, 900, 1000, 1100, 1200, 1300

∗ Intermediate strokes and short strokes other than the above are produced upon receipt of order.

Specifications

Model		**MGG□□20**	**MGG□□25**	**MGG□□32**	**MGG□□40**	**MGG□□50**	**MGG□□63**	**MGG□□80**	**MGG□□100**
Basic cylinder		**CDBG1BN**	**Bore size**	**Port thread**	**Stroke** -	**Lock position**	**Manual release**	- **Auto switch**	- **XC70**
Bore size (mm)		**20**	**25**	**32**	**40**	**50**	**63**	**80**	**100**
Action		Double acting							
Fluid		Air							
Proof pressure		1.5 MPa							
Maximum operating pressure		1.0 MPa							
Minimum operating pressure		0.15 MPa (Horizontal with no load)							
Ambient and fluid temperature		–10 to 60 °C							
Piston speed		50 to 1000 mm/s						50 to 700 mm/s	
Cushion	**Basic cylinder**	Rubber bumper							
	Guide unit	Built-in shock absorbers (2 pcs.)							
Stroke adjusting range (One side) [Built-in adjusting bolts (2 pcs.)]		0 to –10 mm	0 to –15 mm						
Base cylinder lubrication		Non-lube							
Thread tolerance		JIS Class 2							
Stroke length tolerance		$^{+1.9}_{+0.2}$ mm (1000 st or less), $^{+2.3}_{+0.2}$ mm (1001 st or more)							
Non-rotating accuracy*	**Slide bearing**	0.07	0.06	0.06	0.05	0.04	0.04	0.04	0.03
	Ball bushing bearing	0.06	0.05	0.04	0.04	0.04	0.03	0.03	0.02
Piping port size (Rc, NPT, G)		1/8				1/4		3/8	1/2

∗ When the cylinder is retracted (initial value), with no load or without deflection of the guide rod, the non-rotating accuracy shall be the value in the table or less.

Lock Specifications

Bore size (mm)	**20**	**25**	**32**	**40**	**50**	**63**	**80**	**100**
Holding force (Max.) (N)	215	330	550	860	1340	2140	3450	5390
Lock position	Head end, Rod end							
Backlash	2 mm or less							
Manual release	Non-lock type, Lock type							

∗ Adjust switch positions for operation at both the stroke end and backlash (2 mm) movement positions.

Shock Absorber Specifications

Shock absorber model		**RB1007**	**RB1412**	**RB2015**	**RB2725**
Applicable guide cylinder		**MGG□□20**	**MGG□□25, 32**	**MGG□□40, 50, 63**	**MGG□□80, 100**
Maximum energy absorption (J)		5.88	19.6	58.8	147
Stroke absorption (mm)		7	12	15	25
Maximum collision speed (m/s)		5			
Max. operating frequency (cycle/min*)		70	45	25	10
Ambient temperature range (C)		–10 to 80			
Spring force (N)	**Extended**	4.22	6.86	8.34	8.83
	Retracted	6.86	15.98	20.5	20.01

∗ It denotes the values at the maximum energy absorption per cycle. Therefore, the operating frequency can be increased according to the energy absorption.

Theoretical Output

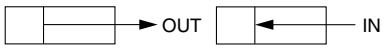

Unit: N

Bore size (mm)	Rod size (mm)	Operating direction	Piston area (mm^2)	Operating pressure (MPa)								
				0.2	0.3	0.4	0.5	0.6	0.7	0.8	0.9	1.0
20	8	OUT	314	62.8	94.2	126	157	188	220	251	283	314
		IN	264	52.8	79.2	106	132	158	185	211	238	264
25	10	OUT	491	98.2	147	196	246	295	344	393	442	491
		IN	412	82.4	124	165	206	247	288	330	371	412
32	12	OUT	804	161	241	322	402	482	563	643	724	804
		IN	691	138	207	276	346	415	484	553	622	691
40	16	OUT	1260	252	378	504	630	756	882	1010	1130	1260
		IN	1060	212	318	424	530	636	742	848	954	1060
50	20	OUT	1960	392	588	784	980	1180	1370	1570	1760	1960
		IN	1650	330	495	660	825	990	1160	1320	1490	1650
63	20	OUT	3120	624	936	1250	1560	1870	2180	2500	2810	3120
		IN	2800	560	840	1120	1400	1680	1960	2240	2520	2800
80	25	OUT	5030	1010	1510	2010	2520	3020	3520	4020	4530	5030
		IN	4540	908	1360	1820	2270	2720	3180	3630	4090	4540
100	30	OUT	7850	1570	2360	3140	3930	4710	5500	6280	7070	7850
		IN	7150	1430	2150	2860	3580	4290	5010	5720	6440	7150

Note) Theoretical output (N) = Pressure (MPa) x Piston area (mm^2)

Weight

(kg)

Bore size (mm)			20	25	32	40	50	63	80	100
Basic weight	LB type (Ball bushing bearing / Basic)		1.72	2.82	3.84	7.19	11.63	16.6	26.32	37.46
	LF type (Ball bushing bearing / Front mounting flange)		2.44	3.79	4.87	9.38	14.17	20.58	33	45.98
	MB type (Slide bearing / Basic)		1.71	2.79	3.36	7.17	11.36	16.22	25.61	36.36
	MF type (Slide bearing / Front mounting flange)		2.42	3.75	4.39	9.37	13.89	20.2	32.29	44.89
Additional weight per each 50 mm of stroke			0.14	0.17	0.25	0.4	0.61	0.82	1.11	1.48
Additional weight for long stroke			0.01	0.01	0.02	0.03	0.06	0.1	0.19	0.26
Additional weight with bracket			0.011	0.018	0.019	0.031	0.061	0.269	0.384	0.548
Additional weight of lock unit	Head end lock (H)	Non-lock type (N)	0.05	0.07	0.08	0.17	0.26	0.44	0.8	1.15
		Lock type (L)	0.07	0.08	0.1	0.21	0.3	0.48	0.88	1.23
	Rod end lock (R)	Non-lock type (N)	0.07	0.08	0.12	0.19	0.31	0.51	0.9	1.31
		Lock type (L)	0.09	0.1	0.14	0.23	0.34	0.54	0.97	1.39

Calculation: (Example) **MGGLB32-500-HN**
(Ball bushing bearing / Basic, ø32/500 st., with bracket)
- Basic weight ····· 3.84 (LB type)
- Additional stroke weight ····· 0.25/50 st
- Stroke ····· 500 st
- Additional weight for long stroke ····· 0.02
- Additional weight with bracket ····· 0.019
- Additional weight of lock unit ····· 0.08 (Head end, Non-lock type)

3.84 + 0.25 x 500/50 + 0.02 + 0.019 + 0.08 = 6.459 kg

Made to Order

Made to Order
(For details, refer to page 71.)

Symbol	Specifications
XC79	Additional machining of tapped hole, drilled hole or pinned hole

Moving Parts Weight

(kg)

Bore size (mm)	20	25	32	40	50	63	80	100
Moving parts basic weight	0.69	1.14	1.61	3.09	5.23	8.29	13.09	18.58
Additional weight per each 50 mm of stroke	0.109	0.135	0.203	0.326	0.509	0.679	0.948	1.265

Calculating weight of moving parts (Example) **MGGLB32-500-HN**
- Moving parts basic weight ····· 1.61
- Additional stroke weight ····· 0.203/50 st
- Stroke ····· 500 st

1.61 + 0.203 x 500/50 = 3.64 kg

Refer to pages 8 to 16 for the allowable end load and deflection, as well as the allowable eccentric load.

Construction

MGG□□
ø20 to ø100

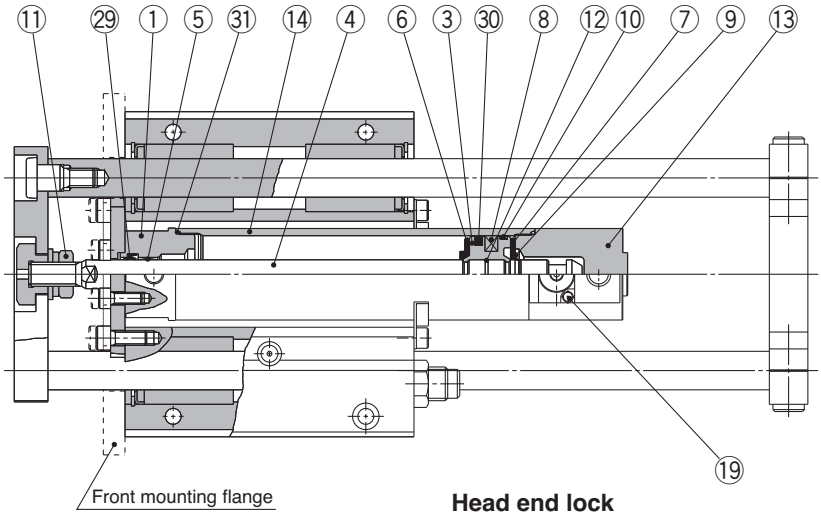

Head end lock

Manual release (Lock type)

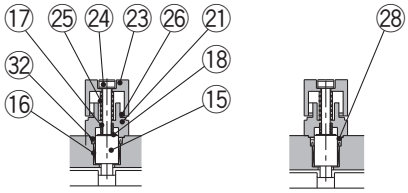

ø20 to ø63 **ø80, ø100**

Manual release (Non-lock type)

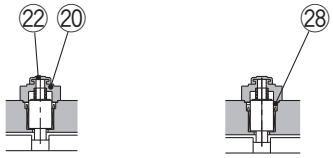

ø20 to ø63 **ø80, ø100**

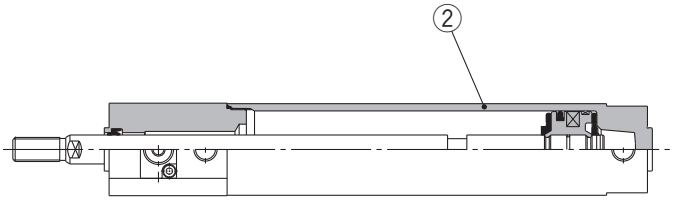

With rod end locking (Base cylinder only)

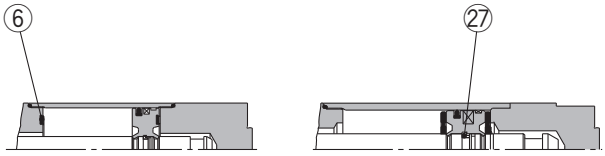

ø80, ø100 **ø40 to ø100**

∗ Since the guide unit figure is the same as the standard type, refer to page 17 through to 19.

Component Parts

No.	Description	Material	Note	
1	**Rod cover**	Aluminum alloy	White hard anodized	
2	**Tube cover**	Aluminum alloy	White hard anodized	
3	**Piston**	Aluminum alloy	Chromated	
4	**Piston rod**	Carbon steel	Hard chrome plated	ø20, ø25 are stainless steel
5	**Bushing**	Bearing alloy		
6	**Bumper A**	Urethane	Description is “Bumper” for ø63 and larger	
7	**Bumper B**	Urethane	ø40 and larger are the same as Bumper A.	
8	**Magnet**	—		
9	**Snap ring**	Stainless steel	Not required for ø80, ø100	
10	**Wear ring**	Resin		
11	**Rod end nut**	Rolled steel	Nickel plated	ø100 is carbon steel
12	**Piston gasket**	NBR		
13	**Head cover**	Aluminum alloy	White hard anodized	For head side locking type and long stroke
14	**Cylinder tube**	Aluminum alloy	Hard anodized	
15	**Lock piston**	Carbon steel	Hard chrome plated, Heat treated	
16	**Lock bushing**	Bearing alloy		
17	**Lock spring**	Stainless steel		
18	**Bumper**	Urethane		
19	**Hexagon socket head cap screw**	Chromium molybdenum steel	Black zinc chromated	
20	**Cap A**	Aluminum die-casted	Black painted	For non-lock type
21	**Cap B**	Carbon steel	Oxide film treated	For lock type
22	**Rubber cap**	Synthetic rubber	For non-lock type	
23	**M/O knob**	Zinc die-casted	Black painted	For lock type
24	**M/O bolt**	Chromium molybdenum steel	Black zinc chromated, Red painted	For lock type
25	**M/O spring**	Steel wire	Zinc chromated	For lock type ø20, ø25, ø32 are stainless stee

Component Parts

No.	Description	Material	Note	
26	**Stopper ring**	Carbon steel	Zinc chromated	For lock type
27	**Piston holder**	Urethane	Used for ø40 and larger	
28	**Seal retainer**	Rolled steel	Used for ø80 and ø100	
29	**Rod seal**	NBR		
30	**Piston seal**	NBR		
31	**Tube gasket**	NBR		
32	**Lock piston seal**	NBR		

∗ Since the guide unit parts are the same as the standard type, refer to page 17 through to 19.

Replacement Parts: Seal Kit

Bore size (mm)	Kit no.	Contents
20	CBG1N20-PS	Set of nos. above ㉙, ㉚, ㉛, ㉜.
25	CBG1N25-PS	
32	CBG1N32-PS	
40	CBG1N40-PS	

∗ Seal kit includes ㉙ to ㉜. Order the seal kit, based on each bore size.
∗ Seal kit includes a grease pack (10 g).
Order with the following part number when only the grease pack is needed.
Grease pack part no.: GR-S-010 (10 g)

⚠Caution

Basic cylinders with ø50 or larger bore sizes cannot be disassembled.
(Cylinders with ø50 or larger bore sizes are tightened with a large tightening torque and cannot be disassembled. Please contact SMC when disassembly is required.)

Dimensions

Basic: MGG□B
ø20 to ø50

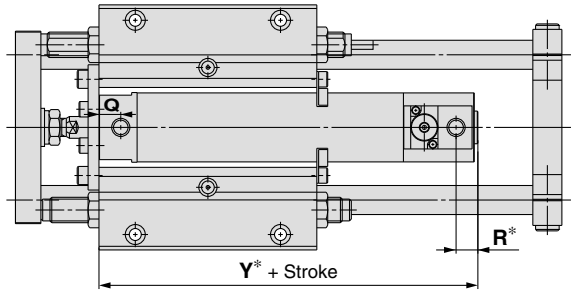

Head end lock

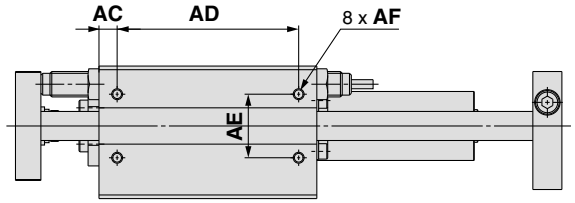

Rod end lock

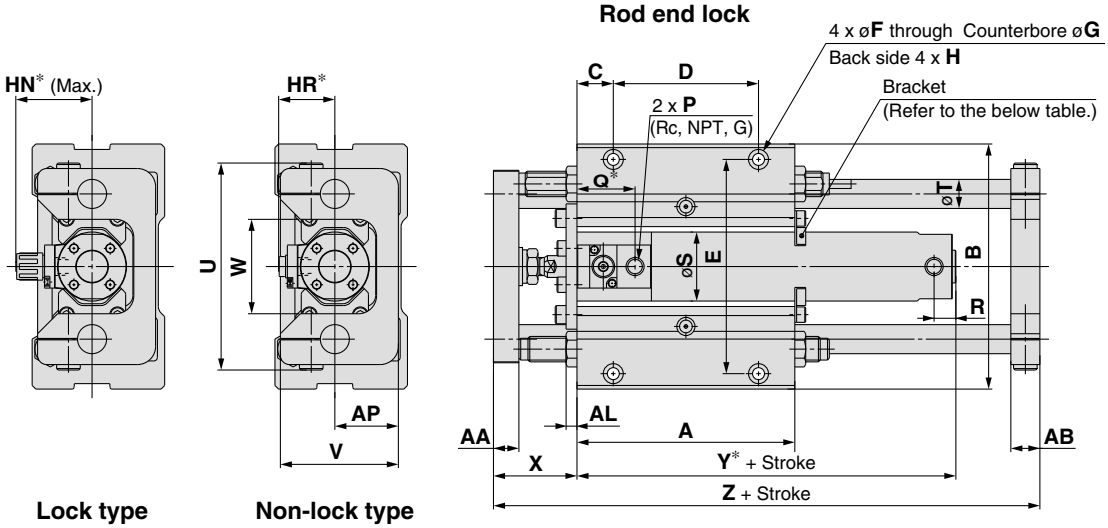

Lock type Non-lock type

Dimensions not marked with an "∗" are the same as standard type. (mm)

Bore size (mm)	Stroke range (mm)	A	AA	AB	AC	AD	AE	AF	AL	AP	B	C	D	E	F	G	H	I	J	K	L	M	N
20	75, 100, 125, 150, 200	90	11	11	7.5	75	30	M5 depth 10	6	25	108	15	60	92	5.5	9.5 depth 6	M8 depth 14	30	55	60	80	25	45
25	75, 100, 125, 150, 200, 250, 300	100	14	13	7.5	85	30	M6 depth 12	6	30	130	17.5	65	113	6.6	11 depth 8	M10 depth 18	35	65	70	100	35	54
32		120	14	16	10	100	35	M6 depth 12	6	35	135	20	80	118	6.6	11 depth 8	M10 depth 18	40	73	80	106	35	60
40		140	17	19	10	120	40	M8 depth 16	9	45	170	20	100	150	9	14 depth 10	M12 depth 21	50	93	95	134	50	75
50		170	23	21	10	150	45	M10 depth 20	9	50	194	25	120	170	11	17 depth 12	M14 depth 25	55	103	115	152	56	90

Bore size (mm)	O	P Note)	S	T	U	V	W	X	Z
20	M6 depth 9	1/8	26	12	82	48	40	39	157
25	M6 depth 13	1/8	31	13	100	57	46	46	175
32	M6 depth 13	1/8	38	16	114	65	52	46	201
40	M8 depth 16	1/8	47	20	138	84	62	56	238
50	M10 depth 21	1/4	58	25	164	94	75	67	285

Note) Rc, NPT, G port are available.

Bore size (mm)	For lock type	For non-lock type
	HN*	**HR***
20	37	25.3
25	40	28.3
32	43	31.3
40	52.5	38.3
50	58.5	44.5

Bore size (mm)	Rod end lock			Head end lock		
	Q*	**R**	**Y***	**Q**	**R***	**Y***
20	38.5	12 (14)	98 (106)	12	11	95
25	39	12 (14)	98 (106)	12	11	95
32	40	12 (14)	101 (109)	12	11	97
40	41	12 (15)	109 (118)	13	11	111
50	47	14 (16)	125 (137)	14	16	128

Note) ( ): Dimensions for long stroke.

Long Stroke

Bore size (mm)	Stroke range (mm)
20	250 to 400
25	350 to 500
32	350 to 600
40	350 to 800
50	350 to 1000

Bracket Mounting Stroke

Bore size (mm)	Bracket mounting stroke
20	100 st or more
25	125 st or more
32	150 st or more
40	200 st or more
50	250 st or more

Dimensions

Basic: MGG□B
ø63 to ø100

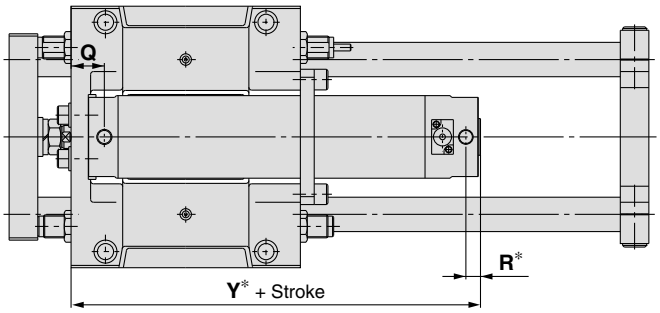

Head end lock

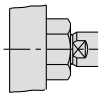

ø100 piston rod end connection

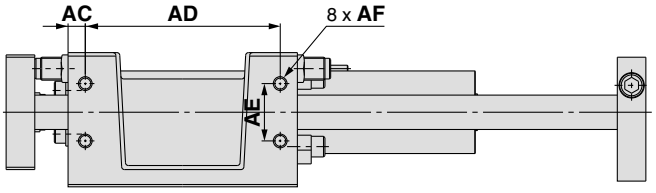

Rod end lock

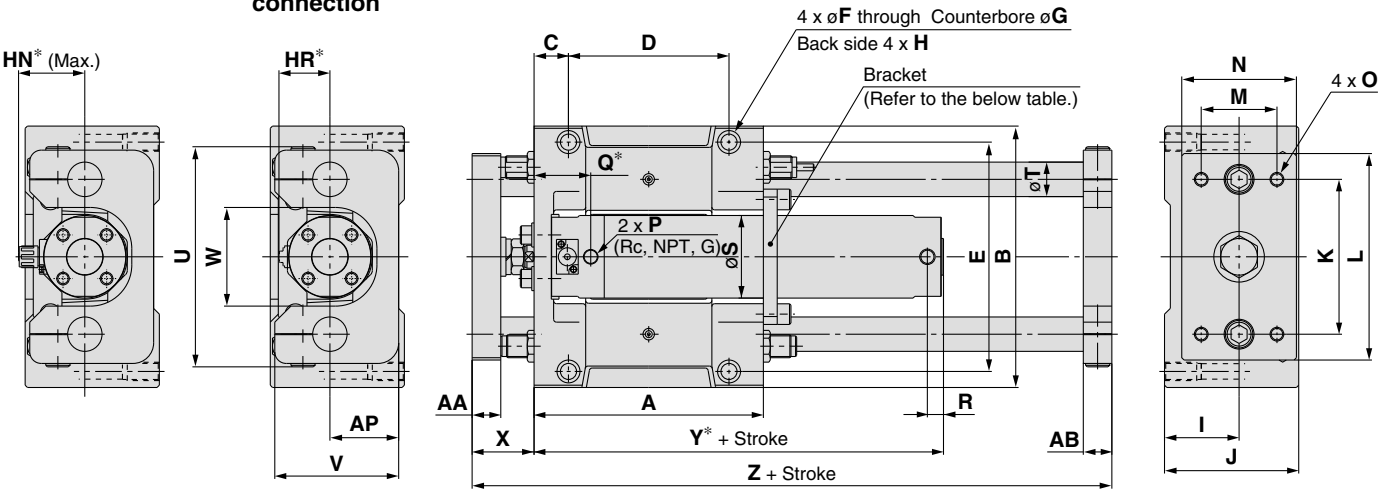

Lock type **Non-lock type**

Dimensions not marked with an "∗" are the same as standard type. (mm)

Bore size (mm)	Stroke range (mm)	A	AA	AB	AC	AD	AE	AF	AP	B	C	D	E	F	G	H	I	J	K	L	M	N
63	75, 100, 125 150, 200 250, 300	200	25	25	15	170	50	M12 depth 24	60	228	30	140	200	13.5	20 depth 14.5	M16 depth 28	65	117	135	180	66	100
80		230	30	27	15	200	55	M12 depth 24	70	262	30	170	234	13.5	20 depth 14.5	M16 depth 28	75	138	160	214	76	115
100		280	32	30	17.5	245	70	M14 depth 28	80	304	35	210	274	15	23 depth 17	M18 depth 32	85	153	190	245	80	125

Bore size (mm)	O	P Note)	S	T	U	V	W	X	Z
63	M12 depth 23	1/4	72	30	192	108	86	54	308
80	M12 depth 28	3/8	89	35	224	128	104	66	355
100	M14 depth 30	1/2	110	40	262	143	128	66	410

Note) Rc, NPT, G port are available.

Bore size (mm)	For lock type	For non-lock type
	HN*	**HR***
63	59	45
80	68	53.5
100	79	64.5

Bore size (mm)	Rod end lock			Head end lock		
	Q*	**R**	**Y***	**Q**	**R***	**Y***
63	63	14 (16)	142 (154)	29	15	147
80	82	19 (23)	175 (189)	40	17	182
100	85	19 (23)	180 (194)	40	23	188

Note) ( ): Dimensions for long stroke.

Long Stroke

Bore size (mm)	Stroke range (mm)
63	350 to 1100
80	350 to 1200
100	350 to 1300

Bracket Mounting Stroke

Bore size (mm)	Bracket mounting stroke
63	300 st or more
80	400 st or more
100	500 st or more

Dimensions

Front mounting flange: MGG□F
ø20 to ø50

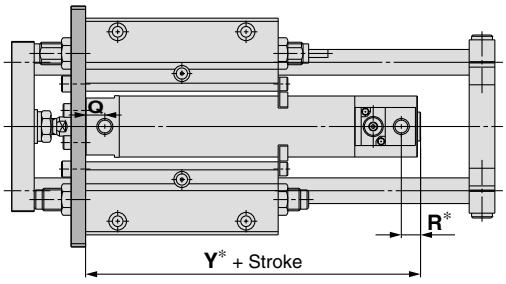

Head end lock

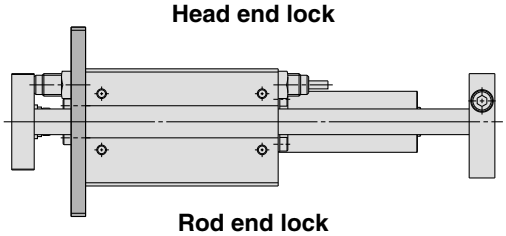

Rod end lock

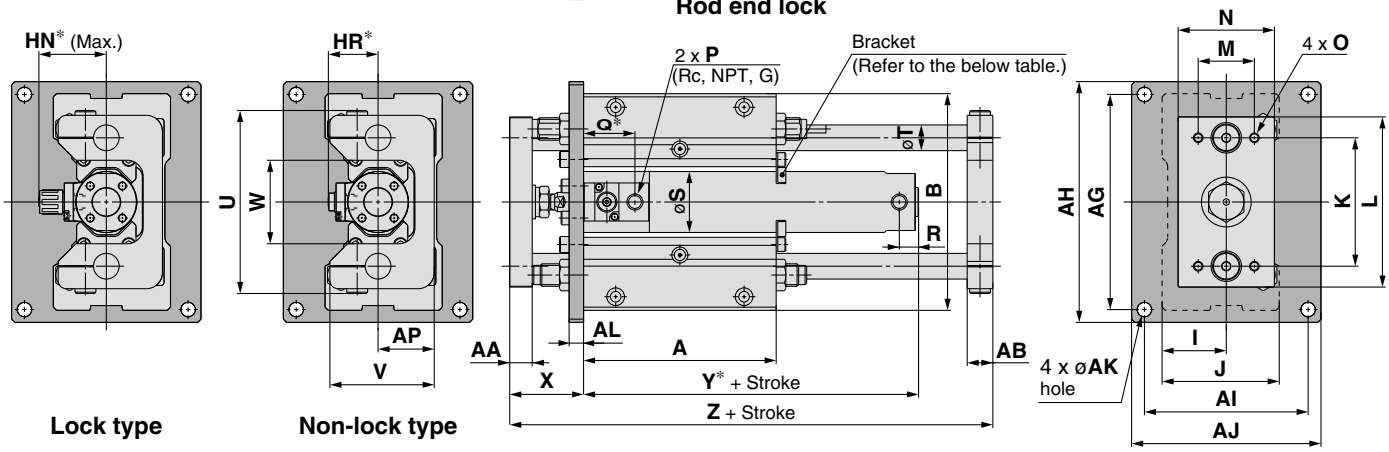

Lock type

Non-lock type

Dimensions not marked with an "∗" are the same as standard type.

(mm)

Bore size (mm)	Stroke range (mm)	A	AA	AB	AG	AH	AI	AJ	AK	AL	AP	B	I	J	K	L	M	N	O	P Note)	S	T	U	V
20	75, 100, 125, 150, 200	90	11	11	112	125	82	95	6.6	9	25	108	30	55	60	80	25	45	M6 depth 9	1/8	26	12	82	48
25	75, 100, 125, 150, 200, 250, 300	100	14	13	134	150	92	108	9	9	30	130	35	65	70	100	35	54	M6 depth 13	1/8	31	13	100	57
32		120	14	16	134	150	102	118	9	9	35	135	40	73	80	106	35	60	M6 depth 13	1/8	38	16	114	65
40		140	17	19	170	186	134	150	9	12	45	170	50	93	95	134	50	75	M8 depth 16	1/8	47	20	138	84
50		170	23	21	190	210	140	160	11	12	50	194	55	103	115	152	56	90	M10 depth 21	1/4	58	25	164	94

Bore size (mm)	W	X	Z
20	40	39	157
25	46	46	175
32	52	46	201
40	62	56	238
50	75	67	285

Bore size (mm)	For lock type	For non-lock type
	HN*	**HR***
20	37	25.3
25	40	28.3
32	43	31.3
40	52.5	38.3
50	58.5	44.5

Bore size (mm)	Rod end lock			Head end lock		
	Q*	**R**	**Y***	**Q**	**R***	**Y***
20	38.5	12 (14)	98 (106)	12	11	95
25	39	12 (14)	98 (106)	12	11	95
32	40	12 (14)	101 (109)	12	11	97
40	41	12 (15)	109 (118)	13	11	111
50	47	14 (16)	125 (137)	14	16	128

Note) ( ): Dimensions for long stroke.

Note) Rc, NPT, G ports are available.

Long Stroke

Bore size (mm)	Stroke range (mm)
20	250 to 400
25	350 to 500
32	350 to 600
40	350 to 800
50	350 to 1000

Bracket Mounting Stroke

Bore size (mm)	Bracket mounting stroke
20	100 st or more
25	125 st or more
32	150 st or more
40	200 st or more
50	250 st or more

Dimensions

Front mounting flange: MGG□F
ø63 to ø100

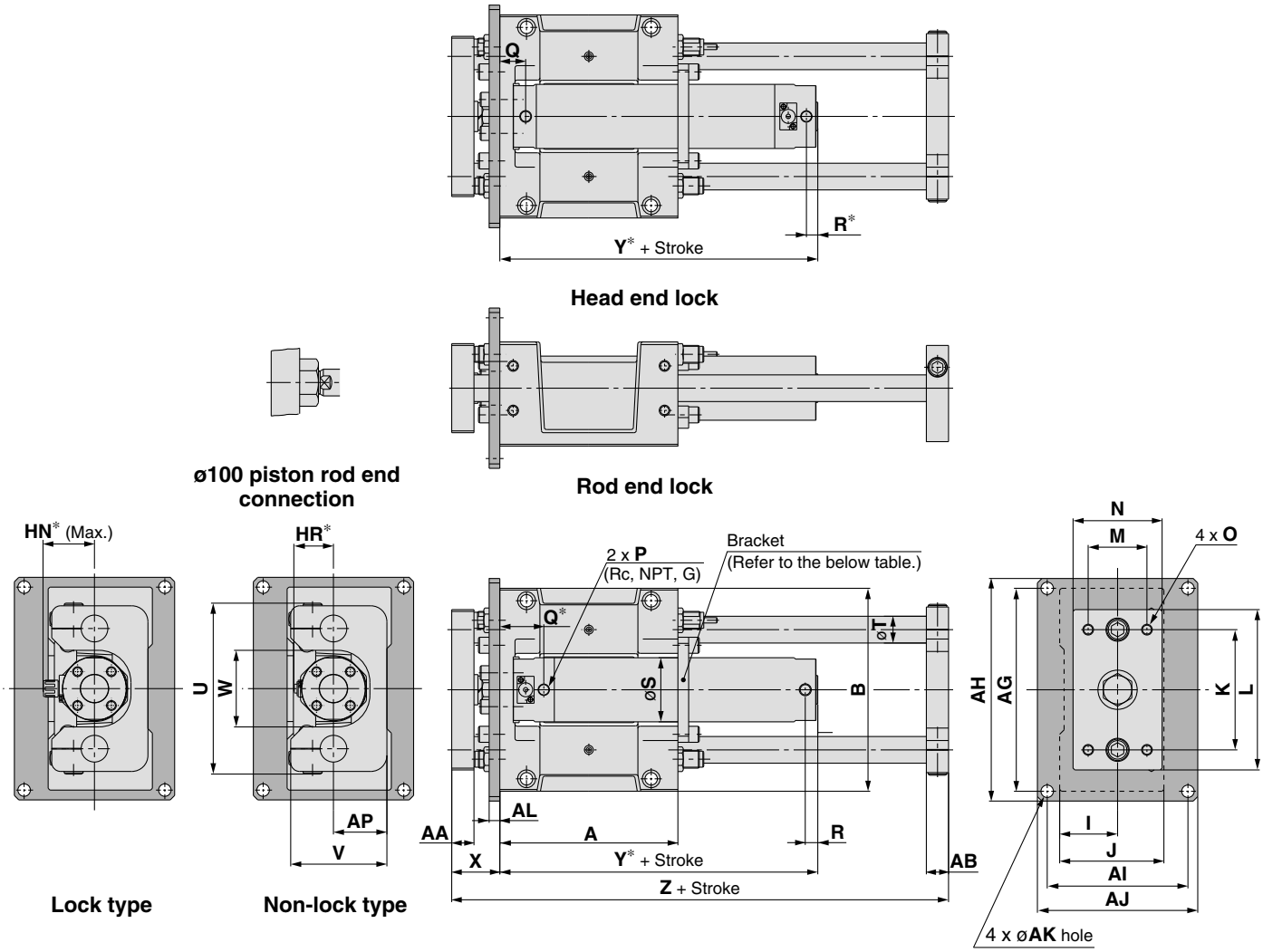

Dimensions not marked with an "∗" are the same as standard type. (mm)

Bore size (mm)	Stroke range (mm)	A	AA	AB	AG	AH	AI	AJ	AK	AL	AP	B	I	J	K	L	M	N	O	P Note)	S	T	U	V
63	75, 100, 125 150, 200 250, 300	200	25	25	228	250	158	180	14	12	60	228	65	117	135	180	66	100	M12 depth 23	1/4	72	30	192	108
80		230	30	27	262	284	178	200	14	16	70	262	75	138	160	214	76	115	M12 depth 28	3/8	89	35	224	128
100		280	32	30	300	326	200	226	16	16	80	304	85	153	190	245	80	125	M14 depth 30	1/2	110	40	262	143

Note) Rc, NPT, G ports are available.

Bore size (mm)	W	X	Z
63	86	54	308
80	104	66	355
100	128	66	410

Bore size (mm)	For lock type	For non-lock type
	HN*	**HR***
63	59	45
80	68	53.5
100	79	64.5

Bore size (mm)	Rod end lock			Head end lock		
	Q*	**R**	**Y***	**Q**	**R***	**Y***
63	63	14 (16)	142 (154)	29	15	147
80	82	19 (23)	175 (189)	40	17	182
100	85	19 (23)	180 (194)	40	23	188

Note) ( ): Dimensions for long stroke.

Long Stroke

Bore size (mm)	Stroke range (mm)
63	350 to 1100
80	350 to 1200
100	350 to 1300

Long Stroke

Bore size (mm)	Bracket mounting stroke
63	300 st or more
80	400 st or more
100	500 st or more

Auto Switch Proper Mounting Position (Detection at Stroke End) and Its Mounting Height

D-M9□, M9□W
D-M9□A
D-A9□

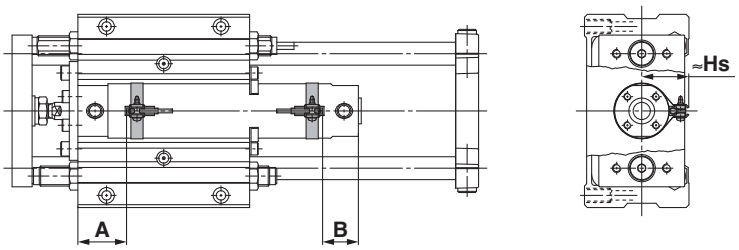

D-M9□V, M9□WV
D-M9□AV
D-A9□V

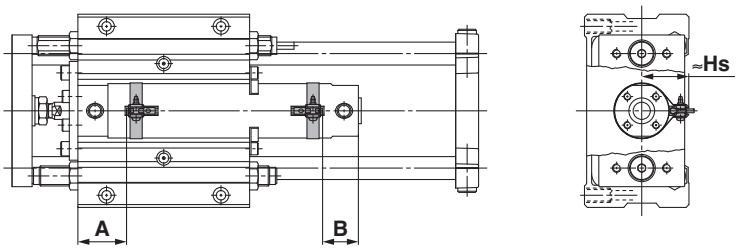

D-H7□, H7□W
D-H7NF, H7BA
D-H7C
D-C7□, C80
D-C73C, C80C

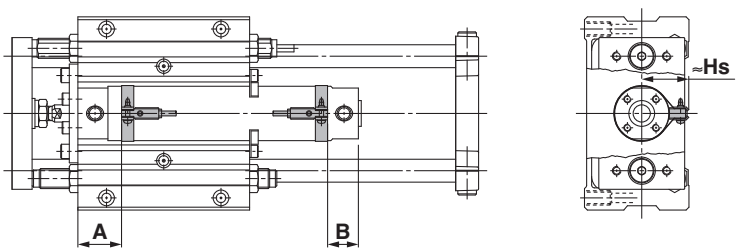

D-G5□, K59
D-G5□W, K59W
D-G59F, G5BA
D-G5NT
D-B5□, B64
D-B59W

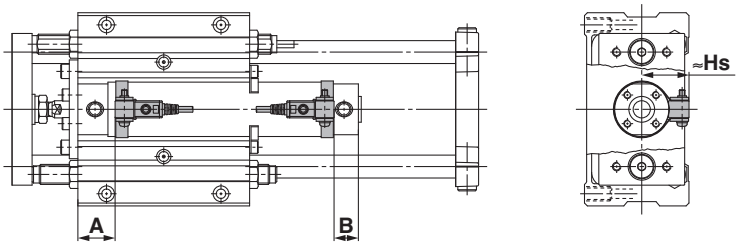

Auto Switch Proper Mounting Position

(mm)

Auto switch model / Bore size (mm)	D-A9□(V)		D-M9□(V) D-M9□W(V) D-M9□A(V)		D-C7□ D-C80 D-C73C D-C80C		D-B5□ D-B64		D-B59W		D-H7□ D-H7C D-H7NF D-H7□W D-H7BA		D-G59F D-G5□ D-K59 D-G5□W D-K59W D-G5NT D-G5BA	
	A	B	A	B	A	B	A	B	A	B	A	B	A	B
20	29	20 (28)	33	24 (32)	29.5	20.5 (28.5)	23.5	15.5 (22.5)	26.5	17.5 (25.5)	28.5	19.5 (27.5)	25	16 (24)
25	28.5	20.5 (28.5)	32.5	24.5 (32.5)	29	21 (29)	23	15 (23)	26	18 (26)	28	20 (28)	24.5	16.5 (24.5)
32	30	21 (29)	34	25 (33)	30.5	21.5 (29.5)	24.5	15.5 (23.5)	27.5	18.5 (26.5)	29.5	20.5 (28.5)	26	17 (25)
40	35	23 (32)	39	27 (36)	35.5	23.5 (32.5)	29.5	19 (26.5)	32	20.5 (29.5)	34.5	22.5 (31.5)	31	19 (28)
50	42	28 (40)	46	32 (36)	42.5	28.5 (40.5)	36.5	22.5 (34.5)	39.5	25.5 (37.5)	41.5	27.5 (39.5)	38	24 (36)
63	40.5	29.5 (41.5)	44.5	33.5 (45.5)	41	30 (42)	35	24 (36)	38	27 (39)	40	29 (41)	36.5	25.5 (37.5)
80	—	—	—	—	—	—	48	29 (43)	51	32 (46)	—	—	49.5	30.5 (44.5)
100	—	—	—	—	—	—	47	30 (44)	50	33 (47)	—	—	48.5	31.5 (45.5)

Auto Switch Mounting Height

(mm)

Auto switch model / Bore size (mm)	D-M9□(V) D-M9□W(V) D-M9□A(V) D-A9□(V) D-H7□ D-H7□W D-H7NF D-H7BA D-C7□ D-C80	D-C73C D-C80C	D-H7C Note 2) D-G5□ D-G5□W D-K59 D-K59W D-G59F D-G5BA D-G5NT D-B5□ D-B59W D-B64
	Hs	Hs	Hs
20	26.5	27	27.5
25	29	29.5	30
32	32.5	33	33.5
40	37	37.5	38
50	42.5	43	43.5
63	49.5	50	50.5
80	—	—	59
100	—	—	69.5

∗( ): Set values for long stroke, double rod
Note 1) Adjust the auto switch after confirming the operating conditions in the actual setting.
Note 2) The D-H7C cannot be mounted on ø80 and ø100.

Auto Switch Proper Mounting Position (Detection at Stroke End) and Its Mounting Height/End Lock Type: With Head End Lock

D-M9□, M9□W
D-M9□A
D-A9□

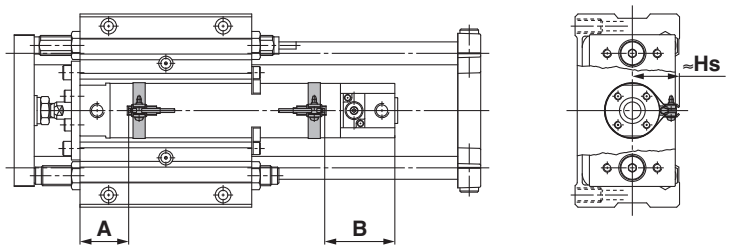

D-M9□V, M9□WV
D-M9□AV
D-A9□V

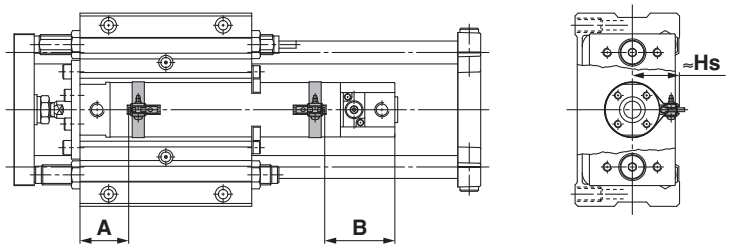

D-H7□, H7□W
D-H7NF, H7BA
D-H7C
D-C7□, C80
D-C73C, C80C

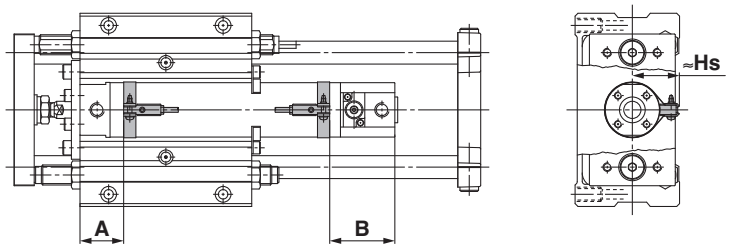

D-G5□, K59
D-G5□W, K59W
D-G59F, G5BA
D-G5NT
D-B5□, B64
D-B59W

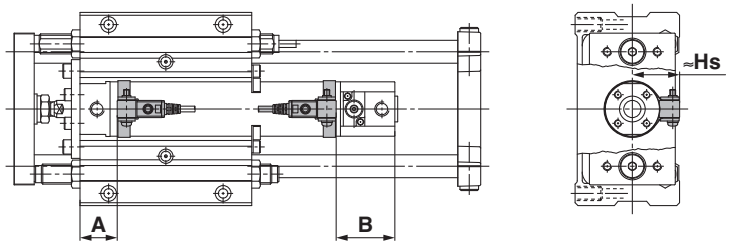

Auto Switch Proper Mounting Position

(mm)

Auto switch model / Bore size (mm)	D-A9□(V) Note 2)		D-M9□(V) D-M9□W(V) D-M9□A(V) Note 2)		D-C7□ D-C80 D-C73C D-C80C		D-B5□ D-B64		D-B59W		D-H7□ D-H7C D-H7NF D-H7□W D-H7BA		D-G59F D-G5□ D-K59 D-G5□W D-K59W D-G5NT D-G5BA	
	A	B	A	B	A	B	A	B	A	B	A	B	A	B
20	29	44	33	48	29.5	44.5	23.5	38.5	26.5	41.5	28.5	43.5	25	40
25	29	44	33	48	29.5	44.5	23.5	38.5	26.5	41.5	28.5	43.5	25	40
32	30	45	34	49	30.5	45.5	24.5	39.5	27.5	42.5	29.5	44.5	26	41
40	35	54	39	58	35.5	54.5	29.5	48.5	32	51.5	34.5	53.5	31	50
50	42	64	46	68	42.5	64.5	36.5	58.5	39.5	61.5	41.5	63.5	38	60
63	42	68	46	72	42.5	68.5	36.5	62.5	39.5	65.5	41.5	67.5	38	64
80	—	—	—	—	—	—	46.5	81.5	49.5	84.5	—	—	48	83
100	—	—	—	—	—	—	46.5	87.5	49.5	90.5	—	—	48	89

Auto Switch Mounting Height

(mm)

Auto switch model / Bore size (mm)	D-A9□(V) D-M9□(V) D-M9□W(V) D-M9□A(V) Note 2)	D-H7□ D-H7□W D-H7NF D-H7BA D-C7□ D-C80	D-C73C D-C80C	D-H7C Note 3) D-G5□ D-G5□W D-K59 D-K59W D-G59F D-G5BA D-G5NT D-B5□ D-B59W D-B64
	Hs	Hs	Hs	Hs
20	26.5	26.5	27	27.5
25	29	29	29.5	30
32	32.5	32.5	33	33.5
40	37	37	37.5	38
50	42.5	42.5	43	43.5
63	49.5	49.5	50	50.5
80	—	—	—	59
100	—	—	—	69.5

Note 1) Adjust the auto switch after confirming the operating conditions in the actual setting.
Note 2) Values when "-C" is specified at the end of the cylinder model number
Note 3) The D-H7C cannot be mounted on ø80 and ø100.

Auto Switch Proper Mounting Position (Detection at stroke end) and Its Mounting Height / End Lock Type: With Rod End Lock

D-M9□, M9□W
D-M9□A
D-A9□

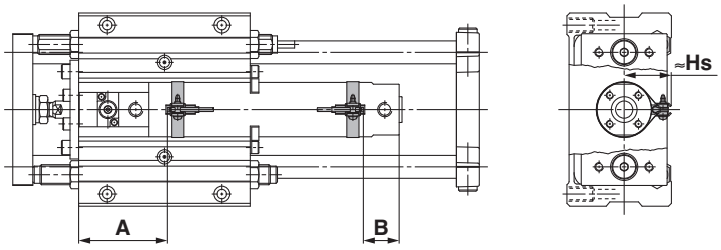

D-M9□V, M9□WV
D-M9□AV
D-A9□V

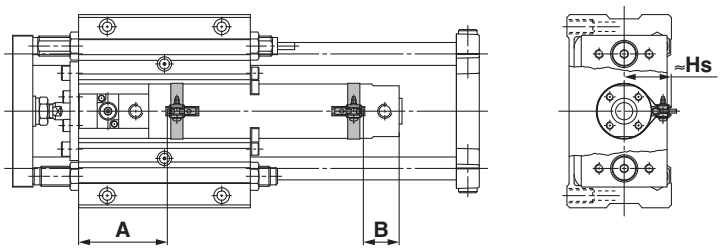

D-H7□, H7□W
D-H7NF, H7BA
D-H7C
D-C7□, C80
D-C73C, C80C

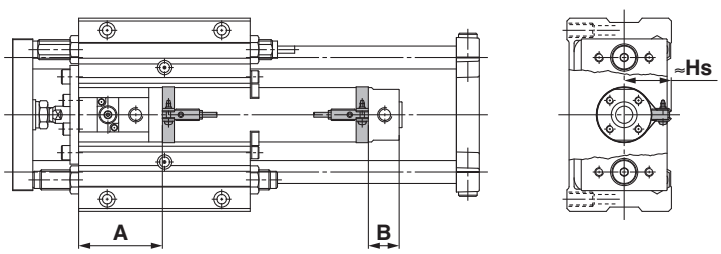

D-G5□, K59
D-G5□W, K59W
D-G59F, G5BA
D-G5NT
D-B5□, B64
D-B59W

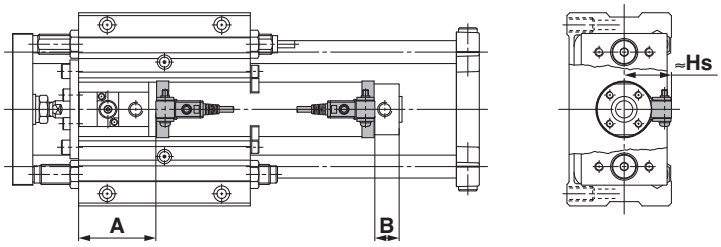

Auto Switch Proper Mounting Position

(mm)

Auto switch model / Bore size (mm)	D-A9□(V) Note 2)		D-M9□(V) D-M9□W(V) D-M9□A(V) Note 2)		D-C7□ D-C80 D-C73C D-C80C		D-B5□ D-B64		D-B59W		D-H7□ D-H7C D-H7NF D-H7□W D-H7BA		D-G59F D-G5□ D-K59 D-G5□W D-K59W D-G5NT D-G5BA	
	A	B	A	B	A	B	A	B	A	B	A	B	A	B
20	56	20 (28)	60	24 (32)	56.5	20.5 (28.5)	50.5	14.5 (22.5)	53.5	17.5 (25.5)	55.5	19.5 (27.5)	52	16 (24)
25	56	20 (28)	60	24 (32)	56.5	20.5 (28.5)	50.5	14.5 (22.5)	53.5	17.5 (25.5)	55.5	19.5 (27.5)	52	16 (24)
32	58	21 (29)	62	25 (33)	58.5	21.5 (29.5)	52.5	15.5 (23.5)	55.5	18.5 (26.5)	57.5	20.5 (28.5)	54	17 (25)
40	64	23 (32)	68	27 (36)	64.5	23.5 (32.5)	58.5	17.5 (26.5)	61	20.5 (29.5)	63.5	22.5 (31.5)	60	19 (28)
50	75	28 (40)	79	32 (44)	75.5	28.5 (40.5)	69.5	22.5 (34.5)	72.5	25.5 (37.5)	74.5	27.5 (39.5)	71	24 (36)
63	77	28 (40)	81	32 (44)	77.5	28.5 (40.5)	71.5	22.5 (34.5)	74.5	25.5 (37.5)	76.5	27.5 (39.5)	73	24 (36)
80	—	—	—	—	—	—	90.5	30.5 (44.5)	93.5	33.5 (47.5)	—	—	92	32 (46)
100	—	—	—	—	—	—	95.5	30.5 (44.5)	98.5	33.5 (47.5)	—	—	97	32 (46)

Auto Switch Mounting Height

(mm)

Auto switch model / Bore size (mm)	D-M9□(V) D-M9□W(V) D-M9□A(V) D-A9□(V) Note 2)	D-H7□ D-H7□W D-H7NF D-H7BA D-C7□ D-C80	D-C73C D-C80C	D-H7C Note 3) D-G5□ D-G5□W D-K59 D-K59W D-G59F D-G5BA D-G5NT D-B5□ D-B59W D-B64
	Hs	Hs	Hs	Hs
20	26.5	26.5	27	27.5
25	29	29	29.5	30
32	32.5	32.5	33	33.5
40	37	37	37.5	38
50	42.5	42.5	43	43.5
63	49.5	49.5	50	50.5
80	—	—	—	59
100	—	—	—	69.5

∗( ): Set values for long stroke, double rod
Note 1) Adjust the auto switch after confirming the operating conditions in the actual setting.
Note 2) Values when "-C" is specified at the end of the cylinder model number
Note 3) The D-H7C cannot be mounted on ø80 and ø100.

Minimum Auto Switch Mounting Stroke

n: No. of auto switches (mm)

Auto switch model	No. of auto switches mounted		
	1 pc.	2 pcs.	"n" pcs.
		Same surface	Same surface
D-M9□	5	40 Note 1)	55 + 35 (n-2) (n = 2, 3, 4, 5…)
D-M9□W	10	40 Note 1)	55 + 35 (n-2) (n = 2, 3, 4, 5…)
D-M9□A	10	40 Note 1)	60 + 35 (n-2) (n = 2, 3, 4, 5…)
D-A9□	5	30 Note 1)	50 + 35 (n-2) (n = 2, 3, 4, 5…)
D-M9□V	5	35	35 + 35 (n-2) (n = 2, 3, 4, 5…)
D-A9□V	5	25	25 + 35 (n-2) (n = 2, 3, 4, 5…)
D-M9□WV **D-M9□AV**	10	35	35 + 35 (n-2) (n = 2, 3, 4, 5…)
D-C7□ **D-C80**	5	50	50 + 45(n-2) (n = 2, 3, 4, 5…)
D-H7□ **D-H7□W** **D-H7BA/H7NF**	10	60	60 + 45 (n-2) (n = 2, 3, 4, 5…)
D-C73C/C80C **D-H7C**	5	65	65 + 50 (n-2) (n = 2, 3, 4, 5…)
D-B5□/B64 **D-G5□/K59□**	5	75	75 + 55 (n-2) (n = 2, 3, 4, 5…)
D-B59W	10		

Note 1) Auto switch mounting

Auto switch model	With 2 auto switches
	Same surface
	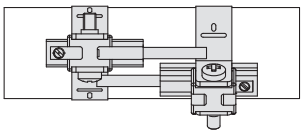 The auto switch is mounted by slightly displacing it in a direction (cylinder tube circumferential exterior) so that the auto switch and lead wire do not interfere with each other.
D-M9□ **D-M9□W**	Less than 55 stroke Note 2)
D-M9□A	Less than 60 stroke Note 2)
D-A9□	Less than 50 stroke Note 2)

Note 2) Minimum stroke for mounting auto switches in the other mounting types mentioned in note 1.

Operating Range

(mm)

Auto switch model								
	20	**25**	**32**	**40**	**50**	**63**	**80**	**100**
D-M9□(V)/M9□W(V) **D-M9□A**	4.5	5	4.5	5.5	5	5.5	—	—
D-A9□	7	6	8	8	8	9	—	—
D-C7□/C80 **D-C73C/C80C**	8	10	9	10	10	11	—	—
D-B5□/B64	8	10	9	10	10	11	11	11
D-B59W	13	13	14	14	14	17	16	18

Auto switch model	Bore size (mm)							
	20	**25**	**32**	**40**	**50**	**63**	**80**	**100**
D-H7□/H7□W **D-H7BA/H7NF**	4	4	4.5	5	6	6.5	—	—
D-H7C	7	8.5	9	10	9.5	10.5	—	—
D-G5□/K59 **D-G5□W/K59W** **D-G5NT/G5BA**	4	4	4.5	5	6	6.5	6.5	7
D-G59F	5	5	5.5	6	7	7.5	7.5	8

∗ Since this is a guideline including hysteresis, not meant to be guaranteed. (Assuming approximately ±30% dispersion) There may be the case to change substantially depending on an ambient environment.

Auto Switch Mounting Bracket: Part No.

Auto switch model	Bore size (mm)							
	20	25	32	40	50	63	80	100
D-M9□(V) **D-M9□W(V)** **D-A9□(V)**	Note 1) BMA3-020 (A set of a, b, c, d)	Note 1) BMA3-025 (A set of a, b, c, d)	Note 1) BMA3-032 (A set of a, b, c, d)	Note 1) BMA3-040 (A set of a, b, c, d)	Note 1) BMA3-050 (A set of a, b, c, d)	Note 1) BMA3-063 (A set of a, b, c, d)	—	—
D-M9□A(V) Note 2)	BMA3-020S (A set of b, c, e, f)	BMA3-025S (A set of b, c, e, f)	BMA3-032S (A set of b, c, e, f)	BMA3-040S (A set of b, c, e, f)	BMA3-050S (A set of b, c, e, f)	BMA3-063S (A set of b, c, e, f)	—	—
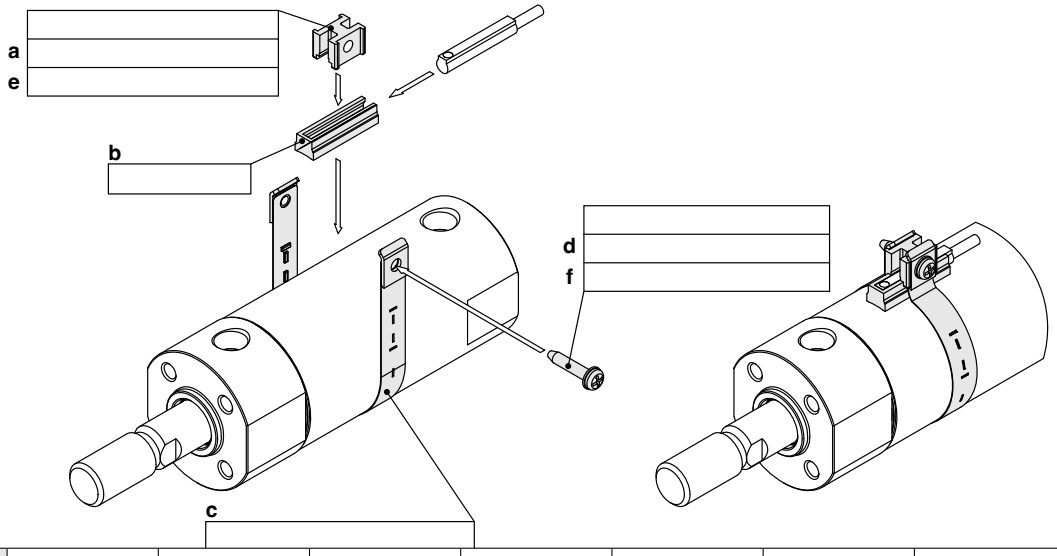								
D-H7□ **D-H7□W** **D-H7NF** **D-C7□/C80** **D-C73C/C80C**	BMA2-020A (A set of c and d)	BMA2-025A (A set of c and d)	BMA2-032A (A set of c and d)	BMA2-040A (A set of c and d)	BMA2-050A (A set of c and d)	BMA2-063A (A set of c and d)	—	—
D-H7BA	BMA2-020AS (A set of c and f)	BMA2-025AS (A set of c and f)	BMA2-032AS (A set of c and f)	BMA2-040AS (A set of c and f)	BMA2-050AS (A set of c and f)	BMA2-063AS (A set of c and f)	—	—
D-B5□/B64 **D-B59W** **D-G5□/K59** **D-G5□W/K59W** **D-G5BA/G59F** **D-G5NT**	BA-01 (A set of c and d)	BA-02 (A set of c and d)	BA-32 (A set of c and d)	BA-04 (A set of c and d)	BA-05 (A set of c and d)	BA-06 (A set of c and d)	BA-08 (A set of c and d)	BA-10 (A set of c and d)

Note 1) Since the switch bracket (made from nylon) are affected in an environment where alcohol, chloroform, methylamines, hydrochloric acid or sulfuric acid is splashed over, so it cannot be used. Please contact SMC regarding other chemicals.

Note 2) When mounting a D-M9□A(V) type auto switch, if the switch bracket is mounted on the indicator light, it may damage the auto switch. Therefore, be sure to avoid mounting the switch bracket on the indicator light.

Band Mounting Brackets Set Part No.

Set part no.	Contents
BJ4-1	· Switch bracket (White/PBT) (e) · Switch holder (b)
BJ5-1	· Switch bracket (Transparent/Nylon) (a) · Switch holder (b)

[Stainless Steel Mounting Screw]

The following stainless steel mounting screw kit is available. Use it in accordance with the operating environment.

(Since the auto switch mounting bracket is not included, order it separately.)

BBA3: D-B5/B6/G5/K5 types

Note) When the D-G5BA type auto switch is shipped independently, the BBA3 is attached.

Besides the models listed in How to Order, the following auto switches are applicable.

Type	Model	Electrical entry	Features	Applicable bore size
Solid state auto switch	D-H7A1, H7A2, H7B	Grommet (In-line)	—	Ø 20 to Ø 63
	D-H7NW, H7PW, H7BW		Diagnostic indication (2-colour indicator)	
	D-H7BA		Water resistant (2-colour indicator)	
	D-G5NT		With timer	Ø 20 to Ø 100
Reed auto switch	D-B53	Grommet (In-line)	—	
	D-C73, C76			Ø 20 to Ø 63
	D-C80		Without indicator light	

∗ For solid state auto switches, auto switches with a pre-wired connector are also available.

∗ Normally closed (NC = b contact) solid state auto switches (D-M9□E(V)) are also available.

Made to Order: Individual Specifications 1

Please contact SMC for detailed dimensions, specifications and lead times.

Made to Order

Symbol

1 With Piping Ports for Grease -X440

This type is equipped with Rc 1/8 piping ports for grease on both sides of the guide body.

How to Order

MGG [Standard model no.] **−X440**

With piping port for grease

Applicable series	MGG	MGC
Bore size (mm)	20, 25, 32, 40, 50 63, 80, 100	20, 25, 32, 40, 50
Fluid	Air	
Minimum operating pressure	0.15 MPa (Horizontal, No load)	
Piston speed	50 to 1000 mm/s	50 to 750 mm/s
Auto switch	Mountable	
Specifications other than above	Same as the standard type	

Dimensions (Dimensions other than those below are the same as the standard type.)

MGG series

ø20 to ø50

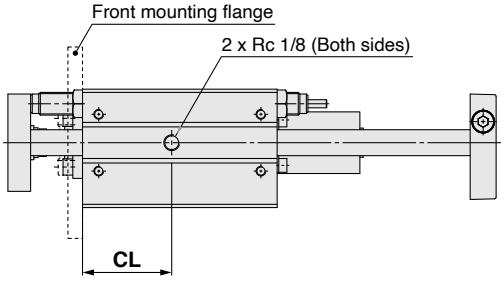

ø63 to ø100

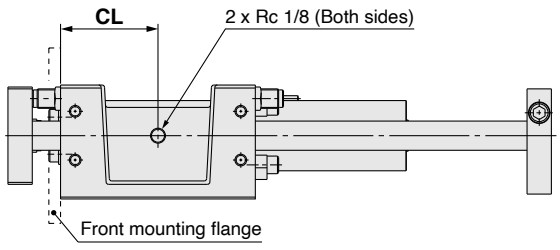

(mm)

Series	MGG
Bore size (mm)	CL
20	40
25	45
32	55
40	65
50	80
63	100
80	115
100	140

∗ The standard grease supply port has a hexagon socket head set screw.

Made to Order: Individual Specifications 2

Please contact SMC for detailed dimensions, specifications and lead times.

Made to Order

1 With Piping Ports for Grease (Water resistant type)

Symbol **-X440**

Type with piping port (Rc 1/8) for grease on both sides of water resistant cylinder guide body.

How to Order

MGG M | **Mounting type** | **Bore size** | **Port thread type** | **R** | **Stroke** | **M9NA** | **Suffix for auto switch** | **X440**

- **M**: Slide bearing
- **R**: Water resistant cylinder

R	NBR seal (Nitrile rubber)
V	FKM seal (Fluororubber)

- **M9NA**: Water resistant 2-color indicator, Solid state auto switch
- **X440**: With piping ports for grease

Specifications

Applicable series	**MGGM**
Bore size (mm)	32, 40, 50, 63, 80, 100
Fluid	Air
Minimum operating pressure	0.15 MPa (Horizontal, No-load)
Piston speed	50 to 1000 mm/s
Auto switch	Available for mounting (Water resistant type)
Bearing type	Slide bearing
Specifications other than above	Same as standard type.

∗ RBL (coolant resistant) type shock absorbers are used.

Dimensions (Dimensions other than those below are the same as the standard type.)

ø32 to ø50

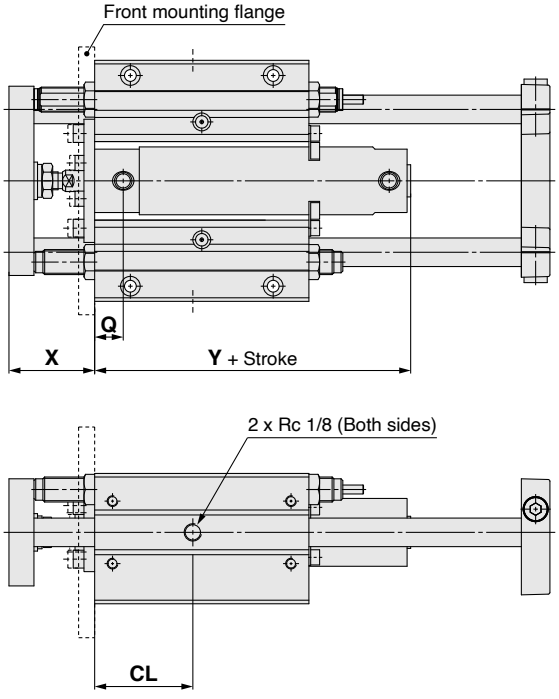

ø63 to ø100

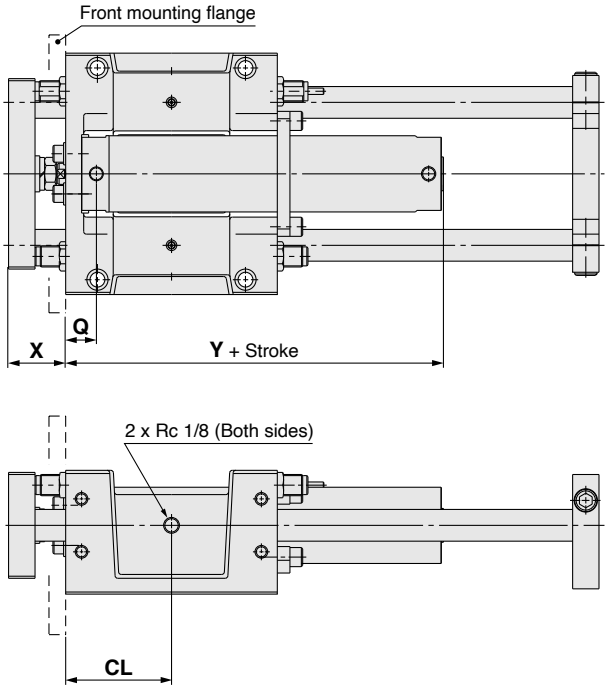

(mm)

Bore size (mm)	Q			X	Y	CL
	Rc	NPT	G			
32	16		14.5	48	77 (85)	55
40	17		17	58	84 (93)	65
50	19		19	69	97 (109)	80
63	34		34	56	112 (124)	100
80	46		43.5	68	137 (151)	115
100	47		44.5	68	138 (152)	140

∗ ( ): Denotes the dimensions for long stroke.
∗ The standard grease supply port has a hexagon socket head set screw.

2 Auto Switch Rail Mounting Type With Piping Ports for Grease

Symbol **-X772**

Cylinder with auto switch rail mounting with piping ports (Rc 1/8) for grease on both sides of guide body.

How to Order

MGG [Bearing type] [Mounting type] [Bore size] — [Stroke] — [Auto switch] — **X772**

Auto switch rail mounting type
With piping ports for grease

Dimensions (Dimensions other than those below are the same as the standard type.)

ø20 to ø50

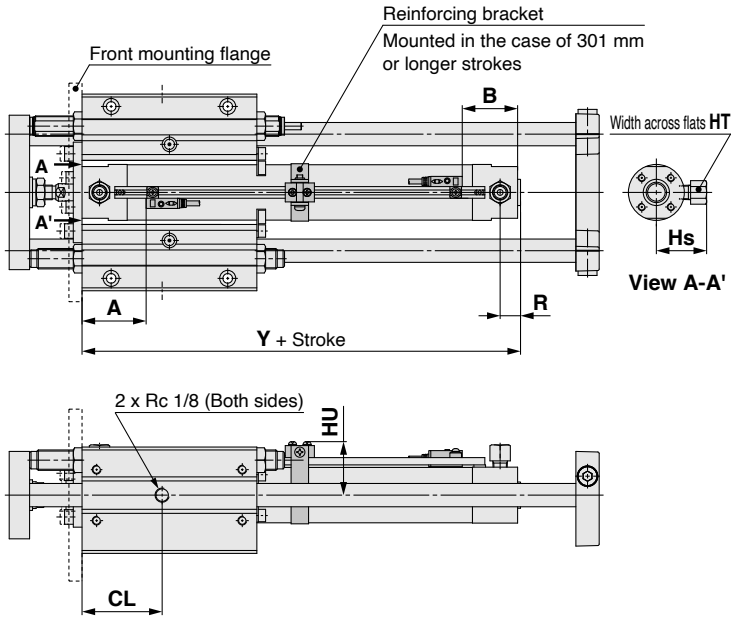

ø63 to ø100

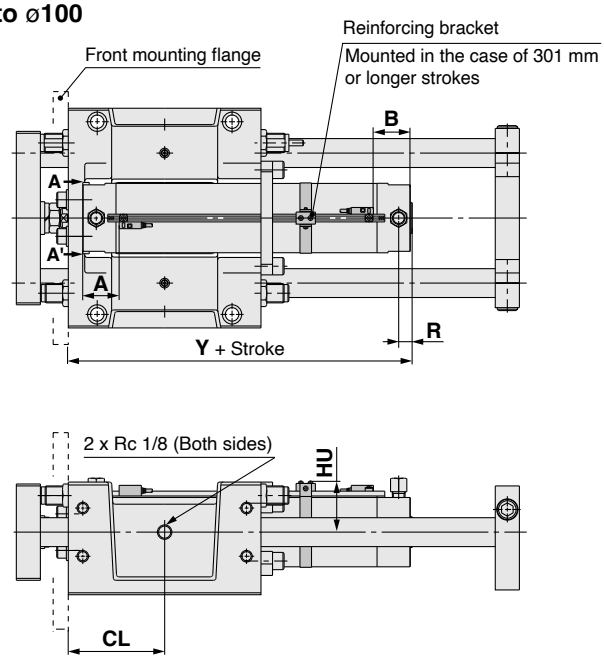

(mm)

Bore size (mm)	R	Y	CL	HS	HT	HU
20	14	99	40	28.5	14	30.7
25	14	99	45	31	14	33.2
32	14	101	55	34.5	14	36.5
40	15	109	65	39	14	41
50	16	124	80	49.5	17	46.2
63	16	139	100	56.5	17	53.2
80	23	165	115	75.5	23	62.2
100	23	165	140	86	26	72.7

∗ The standard grease supply port has a hexagon socket head set screw.

Proper Auto Switch Mounting Position/Applicable Cylinder Series: MGG/MGC (mm)

Applicable bore size (mm) \ Auto switch model	D-M9□/M9□V D-M9□W/M9□WV D-M9□A/M9□AV		D-F7□/F79F/F7□V D-J79/J79C D-F7□W/J79W/F7□WV D-F7BA/F7BAV D-A72/A7□H/A80H D-A73C/A80C		D-F7NT		D-A7□ D-A80		D-A79W	
	A	B	A	B	A	B	A	B	A	B
20	45.5	39.5	43	37	48	42	42.5	36.5	40	34
25	45.5	39.5	43	37	48	42	42.5	36.5	40	34
32	46.5	40.5	44	38	49	43	43.5	37.5	41	35
40	51.5	43.5	49	41	54	46	48.5	40.5	46	38
50	58.5	51.5	56	49	61	54	55.5	48.5	53	46
63	58.5	51.5	56	49	61	54	55.5	48.5	53	46
80	68.5	61.5	66	59	71	64	65.5	58.5	63	56
100	68.5	61.5	66	59	71	64	65.5	58.5	63	56

Auto Switch Mounting Height (mm)

D-M9□/M9□V D-M9□W/M9□WV D-M9□A/M9□AV D-F7□/F79F D-J79/F7NT D-F7□W/J79W/F7BA	D-F7□V D-F7□WV D-F7BAV	D-J79C	D-A7□ D-A80	D-A73C D-A80C	D-A79W
Hs	Hs	Hs	Hs	Hs	Hs
26.5	29	31	26.5	32.5	30
29	31.5	33.5	29	35	32.5
32.5	34.5	36.5	32	38.5	35.5
37	39	41	36.5	43	40
42	44.5	46.5	42	48	45.5
49	51.5	53.5	49	55	52.5
58	60.5	62.5	58	64	61.5
69	71	73	68.5	74.5	72

Note 1) Adjust the auto switch after confirming the operating conditions in the actual setting.
Note 2) Refer to the MGG and MGC series standard types for dimensions other than the auto switch mounting position and mounting height.

MGG Series
Specific Product Precautions 1

Be sure to read this before handling. For Safety Instructions, Actuators Common Precautions, refer to "Precautions for Handling Pneumatic Devices" (M-03-E3A).

Mounting and Adjustment

⚠ Warning

1. Install a protective cover.
Since the rear plate moves back and forth during mounting, handling and operation, be careful that hands, etc., do not get caught between the cylinder and the rear plate.
When you are going to fit this product to the outside of your equipment, take preventative measures such as installing a protective cover.

Protective cover installation example

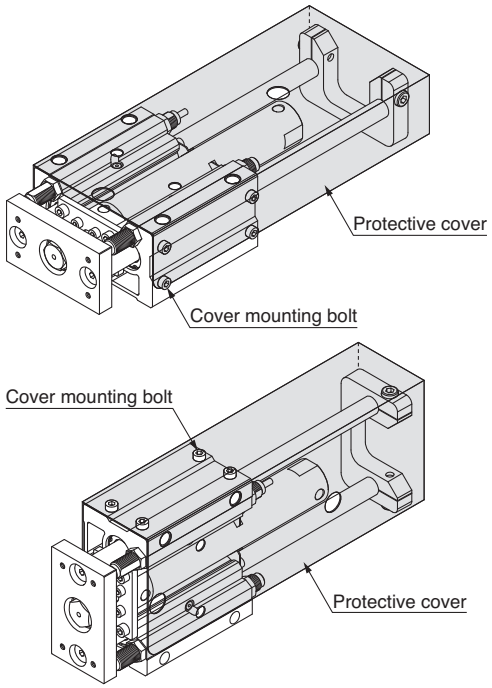

⚠ Caution

1. Use caution that no scratch or dent will be given to the slide part of the guide rod.
Because the outer circumference of the guide rod is manufactured with precise tolerances, even a slight deformation, scratch, or gouge can lead to faulty operation or reduced durability.

2. When mounting the guide body, use a mounting surface having a high degree of flatness.
If twisting or bending occurs in the guide rods, this can cause problems such as a large increase in operating resistance and reduced performance due to premature wear of the bearings.

3. Be sure that the piston rods are retracted when mounting workpieces on the plate.
If workpieces are mounted on the plate when the piston rods are extended, it can lead to distortion of the guide unit, resulting in a malfunction.

⚠ Caution

4. Mount in locations where maintenance will be easy.
Ensure enough clearance around the cylinder to allow for unobstructed maintenance and inspection work.

5. Extension stroke adjustment
To adjust the extension stroke by moving the rear plate, loosen the hexagon socket head screws on the left and right sides of the plate, move the rear plate to the desired stroke position in proximity to the guide body, and retighten the hexagon socket head screws on the left and right.

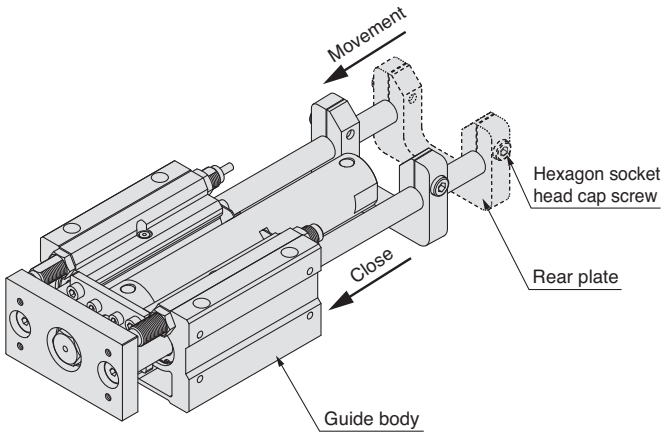

6. Lubrication of bearings
Lubricate from the grease nipple so that there is no contamination from foreign matter.
In addition, use good quality no. 2 lithium soap base grease.

7. Mounting orientation
If the guide body is mounted so that it is inclined more than 90°, the rear plate may interfere with the basic cylinder head end due to the deflection of guide rods. Please consult with SMC.

8. Fixing of base cylinder
When the product is mounted and operated in a location with low rigidity, bending moment may be applied to the base cylinder by vibrations generated at the stroke end, causing damage to the cylinder. In such cases, install a support bracket to suppress the vibration of the body of the base cylinder or reduce the piston speed until the body does not vibrate at the stroke end.

Handling on Shock Absorber

⚠ Caution

1. Be sure to confirm by referring to the shock absorber (RB series, **Web Catalog**) for details.

Series MGG
Specific Product Precautions 2

Be sure to read this before handling. For Safety Instructions, Actuators Common Precautions, refer to "Precautions for Handling Pneumatic Devices" (M-03-E3A).

With End Lock Type

Use the Recommended Pneumatic Circuit

⚠ Caution

● **This is necessary for proper operation and release of the lock.**

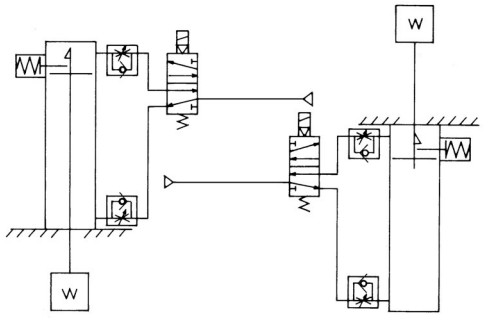

Head end lock **Rod end lock**

Operating Precautions

⚠ Caution

1. **Do not use 3 position solenoid valves.**
   Avoid use in combination with 3 position solenoid valves (especially closed center metal seal types). If pressure is trapped in the port on the lock mechanism side, the cylinder cannot be locked. Furthermore, even after being locked, the lock may be released after some time, due to air leaking from the solenoid valve and entering the cylinder.
2. **Back pressure is required when releasing the lock.**
   Before starting operation, be sure to control the system so that air is supplied to the side without the lock mechanism as shown in the figure above. There is a possibility that the lock may not be released. (→ Refer to the section on releasing the lock.)
3. **Release the lock when mounting or adjusting the cylinder.**
   If mounting or other work is performed when the cylinder is locked, the lock unit may be damaged.
4. **Operate with a load ratio of 50% or less.**
   If the load ratio exceeds 50%, this may cause problems such as failure of the lock to release, or damage to the lock unit.
5. **Do not operate multiple cylinders in synchronisation.**
   Avoid applications in which two or more end lock cylinders are synchronised to move one workpiece, as one of the cylinder locks may not be able to release when required.
6. **Use a speed controller with meter-out control.**
   The lock may not be released occasionally with meter-in control.
7. **Be sure to operate completely to the cylinder stroke end on the side with the lock.**
   If the cylinder piston does not reach the end of the stroke, locking and unlocking may not be possible. Therefore, do not adjust the stroke with the adjustment bolts or shock absorbers.
8. **Do not use an air cylinder as an air-hydro cylinder. This will cause leakage of hydraulic fluid.**
9. **Adjust an auto switch's position so that it operates for movement to both the stroke end and backlash (2 mm) positions.**
   When a 2-colour indication switch is adjusted for green indication at the stroke end, it may change to red for the backlash return, but this is not abnormal.

⚠ Warning

1. **Operate within the specified cylinder speed.**
   Otherwise, cylinder and seal damage may occur.

Operating Pressure

⚠ Caution

1. Use air pressure of at least 0.15 MPa for the port on the lock mechanism side. This is necessary to release the lock.

Exhaust Speed

⚠ Caution

1. Locking will occur automatically if the pressure applied to the port on the lock mechanism side falls to 0.05 MPa or less. In cases where the piping on the lock mechanism side is long and thin, or the speed controller is separated by some distance from the cylinder port, the exhaust speed will be reduced. Take note that some time may be required for the lock to engage. In addition, clogging of a silencer mounted on the solenoid valve exhaust port can produce the same effect.

Releasing the Lock

⚠ Warning

1. Before releasing the lock, be sure to supply air to the side without the lock mechanism, so that there is no load applied to the lock mechanism when it is released. (Refer to the recommended pneumatic circuits.) If the lock is released when the port on the other side is in an exhaust state, and with a load applied to the lock unit, the lock unit may be subjected to an excessive force and be damaged. Furthermore, sudden movement of the piston rod is very dangerous.

Manual Release

⚠ Caution

1. **Manual release (Non-lock type)**
   Insert the accessory bolt from the top of the rubber cap (it is not necessary to remove the rubber cap), and after screwing it into the lock piston, pull it to release the lock. If you stop pulling the bolt, the lock will return to an operational state.
   Thread sizes, pulling forces and strokes are as shown below.

Bore size (mm)	Thread size	Pulling force (N)	Stroke (mm)
20, 25, 32	M2.5 x 25 ℓ or more	4.9	2
40, 50, 63	M3 x 30 ℓ or more	10	3
80, 100	M5 x 40 ℓ or more	24.5	3

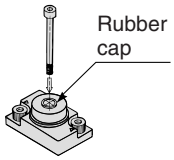

Remove the bolt for normal operation.
It can cause lock malfunction or faulty release.

2. **Manual release, Lock type**
   While pushing the M/O knob, turn it 90° counterclockwise. The lock is released (and remains in a released state) by aligning the ▲ mark on the cap with the ▼ OFF mark on the M/O knob.
   When locking is desired, turn M/O button clockwise 90° while pushing fully, correspond ▲ on cap and ▼ ON mark on M/O button. The correct position is confirmed by a "click" sound. If not confirmed, locking is not function.

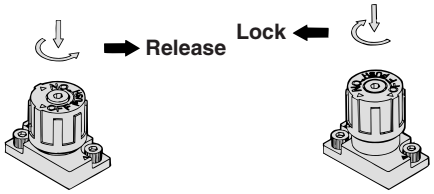

Locked condition **Released condition**

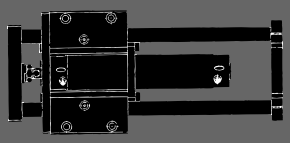

Guide Cylinder
Compact Type
Series MGC

ø20, ø25, ø32, ø40, ø50

Linear Transfer Unit with compact guide body and front plate

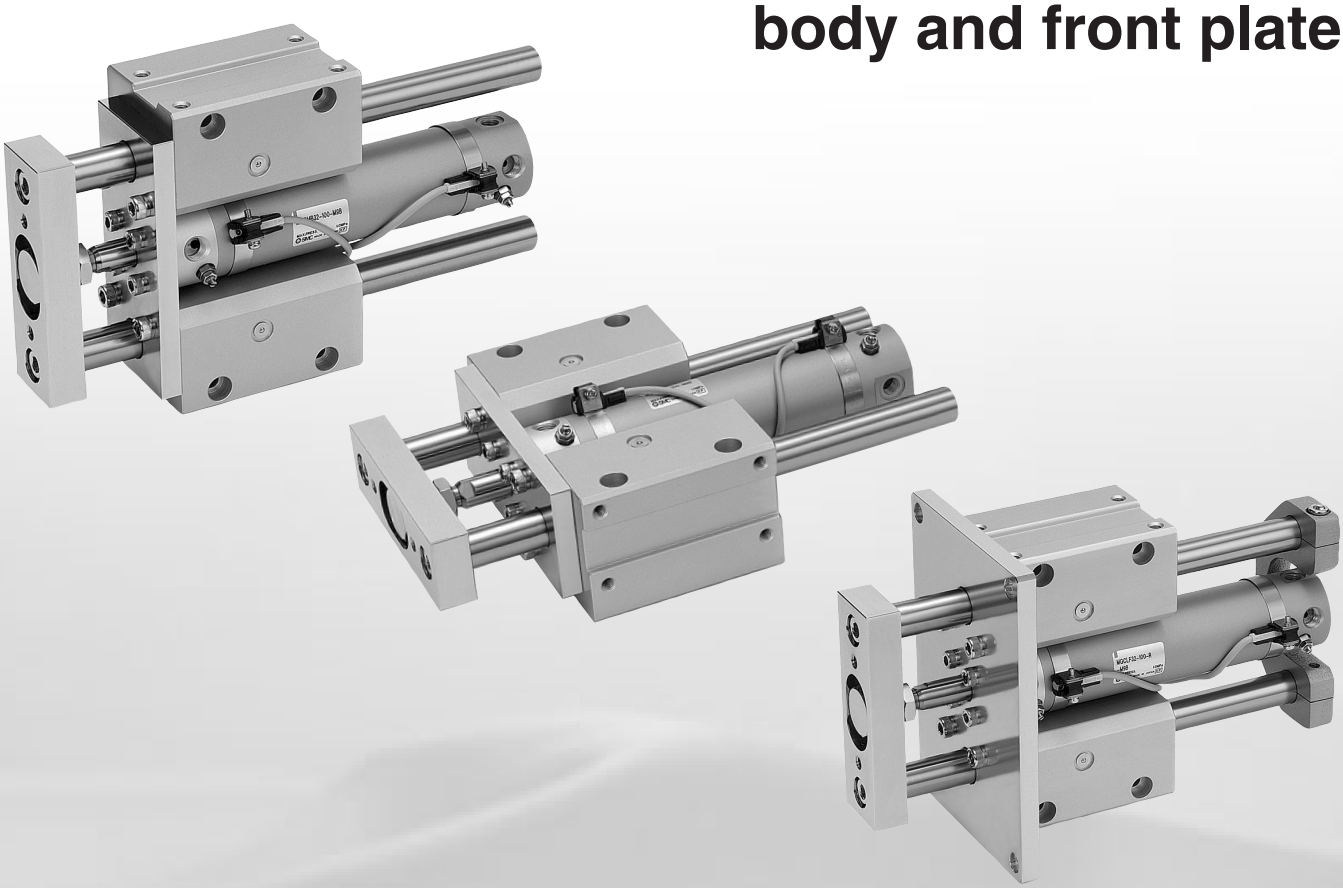

Grease nipple offers easy lubrication for bearings.

Space-saving
Length ▲20%
Height ▲18%
(In comparison with the MGG□B32 series)

Lightweight
Weight ▲28%
(In comparison with the MGG□B32 series)



Models without rear plate are available.

Compact front plate and guide body

Air cushion is standard.
Enables the impact to be absorbed at the stroke end when the cylinder is operated at high speeds.

SMC

Guide Cylinder
Compact Type
Series MGC
ø20, ø25, ø32, ø40, ø50

How to Order

MGC L B 32 ☐ – 100 – R – M9BW ☐ – ☐

Guide cylinder
(Compact type)

Bearing

M	Slide bearing
L	Ball bushing bearing

Mounting

B	Basic
F	Front mounting flange

Bore size

20	20 mm
25	25 mm
32	32 mm
40	40 mm
50	50 mm

Port thread

-	M5
	Rc
TN	NPT
TF	G

∗ For bore size 20 and 25, M5 is only available.

Cylinder stroke (mm)
Refer to "Standard Stroke" on page 41.

Rear plate

-	Without rear plate
R	With rear plate

Auto switch

-	Without auto switch (Built-in magnet)

∗ For applicable auto switch models, refer to the below table.

Number of auto switches

-	2 pcs.
S	1 pc.
n	"n" pcs.

Made to Order
For details, refer to page 41.

Applicable Auto Switches / For detailed auto switch specifications, refer to page 56 through to 70.

Type	Special function	Electrical entry	Indicator light	Wiring (Output)	Load voltage DC	Load voltage AC	Auto switch model: Applicable tubing I.D. ø20, ø25	ø32	ø40, ø50	Lead wire length (m) 0.5 (-)	1 (M)	3 (L)	5 (Z)	None (N)	Pre-wired connector	Applicable load	
Reed switch	——	Grommet	Yes	3-wire (NPN equivalent)	5 V	—	**A96**			●	—	●	—	—	—	IC circuit	—
			None	2-wire	24 V	12 V	100 V	**A93**		●	—	●	—	—	—	—	Relay, PLC
			None				100 V or less	**A90**		●	—	●	—	—	—	IC circuit	
			Yes				100 V, 200 V	**(B54)**	**B54**	●	—	●	●	—	—	—	
			None				200 V or less	**(B64)**	**B64**	●	—	●	—	—	—		
		Connector	Yes				—	**C73C**		●	—	●	●	●	—	—	
			None				24 V or less	**C80C**		●	—	●	●	●	—		
	Diagnostic indication (2-colour indication)	Grommet	Yes			—	—	**(B59W)**	**B59W**	●	—	●	—	—	—		
Solid state switch	——	Grommet	Yes	3-wire (NPN)	24 V	5 V, 12 V	—	**M9N**		●	—	●	○	—	○	IC circuit	Relay, PLC
				3-wire (PNP)				**M9P**		●	—	●	○	—	○		
				2-wire		12 V		**M9B**		●	—	●	○	—	○	—	
		Connector						**H7C**		●	—	●	●	●	—		
	Diagnostic indication (2-colour indication)	Grommet		3-wire (NPN)		5 V, 12 V		**M9NW**		●	●	●	○	—	○	IC circuit	
				3-wire (PNP)				**M9PW**		●	●	●	○	—	○		
				2-wire		12 V		**M9BW**		●	●	●	○	—	○	—	
	Water resistant (2-colour indication)							**H7BA**		—	—	●	○	—	○		
	With diagnostic output (2-colour indication)			4-wire (NPN)		5 V, 12 V		**H7NF**		●	—	●	○	—	○	IC circuit	

∗ Lead wire length symbols: 0.5 m ····· - (Example) M9NW
1 m ····· M (Example) M9NWM
3 m ····· L (Example) M9NWL
5 m ····· Z (Example) M9NWZ
None ····· N (Example) H7CN

∗ Solid state switches marked with "○" are produced upon receipt of order.
∗ D-A9□V, M9□V, M9□WV, and D-M9BA cannot be mounted.

∗ Since there are other applicable auto switches than listed, refer to page 54 for details.
∗ For details about auto switches with pre-wired connector, refer to SMC's "Best Pneumatics" catalogue.
∗ D-A9□, M9□, M9□W are shipped together (but not assembled). (Only switch mounting bracket is assembled at the time of shipment.)

Caution
When using auto switches shown inside ( ), stroke end detection may not be possible depending on the one-touch fitting or speed controller model. Please contact SMC in this case.

JIS Symbol

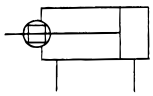



Model / Specifications

Standard Stroke

Model (Bearing type)	Bore size (mm)	Standard stroke (mm)	Long stroke (mm)
MGCM (Slide bearing) **MGCL (Ball bushing bearing)**	**20**	75, 100, 125, 150, 200	250, 300, 350, 400
	25	75, 100, 125, 150, 200, 250, 300	350, 400, 450, 500
	32		350, 400, 450, 500, 600
	40		350, 400, 450, 500, 600, 700, 800
	50		350, 400, 450, 500, 600, 700, 800, 900, 1000

∗ Intermediate strokes and short strokes other than the above are produced upon receipt of order.

Specifications

Model		MGC□□20	MGC□□25	MGC□□32	MGC□□40	MGC□□50
Basic cylinder		CDG1BA Bore size Port thread – Stroke – Auto switch				
Bore size (mm)		20	25	32	40	50
Action		Double acting				
Fluid		Air				
Proof pressure		1.5 MPa				
Maximum operating pressure		1.0 MPa				
Minimum operating pressure		0.15 MPa (Horizontal with no load)				
Ambient and fluid temperature		–10 to 60°C				
Piston speed ∗1		50 to 750 mm/s				
Cushion		Air cushion				
Base cylinder lubrication		Non-lube				
Thread tolerance		JIS Class 2				
Stroke length tolerance		$^{+1.9}_{+0.2}$ mm				
Non-rotating accuracy ∗1	**Slide bearing**	±0.07°	±0.06°	±0.06°	±0.05°	±0.04°
	Ball bushing bearing	±0.06°	±0.05°	±0.04°	±0.04°	±0.04°
Piping port size (Rc, NPT, G) ∗2		M5		1/8		1/4

∗1 When the cylinder is retracted (initial value), with no load or without deflection of the guide rod, the non-rotating accuracy shall be the value in the table or less.
∗2 For bore size 20 and 25, M5 is only available.

Made to Order

Made to Order
(For details, refer to page 71.)

Symbol	Specifications
XB6	Heat resistant cylinder (150°C)
XB13	Low speed cylinder (5 to 50 mm/s)
XC4	With heavy duty scraper
XC6□	Made of stainless steel
XC8	Adjustable stroke cylinder/ Adjustable extension type
XC9	Adjustable stroke cylinder/ Adjustable retraction type
XC11	Dual stroke cylinder/Single rod type
XC13	Auto switch rail mounting
XC22	Fluoro rubber seals
XC35	With coil scraper
XC37	Larger throttle diameter of connecting port
XC56	With knock pin hole
XC73	Built-in cylinder with lock (CDNG)
XC74	With front plate for MGG
XC78	Special dimension for mounting auto switch
XC79	Additional machining of tapped hole, drilled hole or pinned hole
X440	With piping ports for grease

Theoretical Output

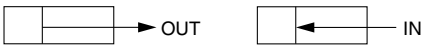

Unit: N

Bore size (mm)	Rod size (mm)	Operating direction	Piston area (mm^2)	Operating pressure (MPa)								
				0.2	**0.3**	**0.4**	**0.5**	**0.6**	**0.7**	**0.8**	**0.9**	**1.0**
20	**8**	OUT	314	62.8	94.2	126	157	188	220	251	283	314
		IN	264	52.8	79.2	106	132	158	185	211	238	264
25	**10**	OUT	491	98.2	147	196	246	295	344	393	442	491
		IN	412	82.4	124	165	206	247	288	330	371	412
32	**12**	OUT	804	161	241	322	402	482	563	643	724	804
		IN	691	138	207	276	346	415	484	553	622	691
40	**16**	OUT	1260	252	378	504	630	756	882	1010	1130	1260
		IN	1060	212	318	424	530	636	742	848	954	1060
50	**20**	OUT	1960	392	588	784	980	1180	1370	1570	1760	1960
		IN	1650	330	495	660	825	990	1160	1320	1490	1650

Note) Theoretical output (N) = Pressure (MPa) x Piston area (mm^2)

Weight

(kg)

Bore size (mm)		20	25	32	40	50
Basic weight	LB type (Ball bushing bearing / Basic)	1.3	1.92	2.61	4.18	7.99
	LF type (Ball bushing bearing / Front mounting flange)	1.82	2.56	3.33	5.47	9.49
	MB type (Slide bearing / Basic)	1.29	1.89	2.55	4.08	7.71
	MF type (Slide bearing / Front mounting flange)	1.81	2.53	3.27	5.37	9.21
Additional weight with rear plate		0.2	0.25	0.34	0.58	1.04
Additional weight per each 50 mm of stroke		0.14	0.17	0.25	0.4	0.61
Additional weight for long stroke		0.01	0.01	0.02	0.03	0.06
Additional weight with bracket		0.022	0.033	0.04	0.074	0.128

Calculation: (Example)
MGCLB32-500-R
(Ball bushing bearing / Basic, ø32/500 st., with rear plate, with bracket)
- Basic weight ····· 2.61 (LB type)
- Additional weight with rear plate ····· 0.34
- Additional stroke weight ····· 0.25/50 st
- Stroke ····· 500 st
- Additional weight for long stroke ····· 0.02
- Additional weight with bracket ····· 0.04

2.61 + 0.34 + 0.25 x 500/50 + 0.02 + 0.04 = 5.51 kg

Moving Parts Weight

(kg)

Bore size (mm)	20	25	32	40	50
Moving parts basic weight	0.35	0.57	0.74	1.29	2.65
Additional weight with rear plate	0.2	0.25	0.34	0.58	1.04
Additional weight per each 50 mm of stroke	0.11	0.14	0.2	0.33	0.51

Calculating weight of moving parts: (Example)
MGCLB32-500-R
- Moving parts basic weight ····· 0.74
- Additional weight with rear plate ····· 0.34
- Additional stroke weight ····· 0.2/50 st
- Stroke ····· 500 st

0.74 + 0.34 + 0.2 x 500/50 = 3.08 kg

Allowable Kinetic Energy (Air Cushion)

R: Rod end, H: Head end

Bore size (mm)	Effective cushion length (mm)	Allowable kinetic energy (J)
20	R: 7, H: 7.5	R: 0.35, H: 0.42
25	R: 7, H: 7.5	R: 0.56, H: 0.65
32	7.5	0.91
40	8.7	1.8
50	11.8	3.4

High kinetic energy generated by large loads and high speed operations can be absorbed by compressing air at the stroke end thus preventing shock and vibration being transmitted to the machine. If the kinetic energy is within the range of the table above, the life of the cushion packing can be expected to exceed a million operations. The air cushion has not been designed to control the piston speed in the end regions of the stroke. The load kinetic energy can be obtained by the following equation:

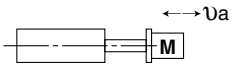

$$Ek = \frac{M + m}{2} \upsilon^2 \qquad \upsilon = 1.4\upsilon a$$

Ek: Kinetic energy (J)
M: Weight for the driven object (kg)
m: Weight for movable part of cylinder (kg)
υ: Maximum speed (m/s)
υa: Average speed (m/s)

Note) Set υa so that rush speed into cushion υ should not exceed 0.75 m/s.

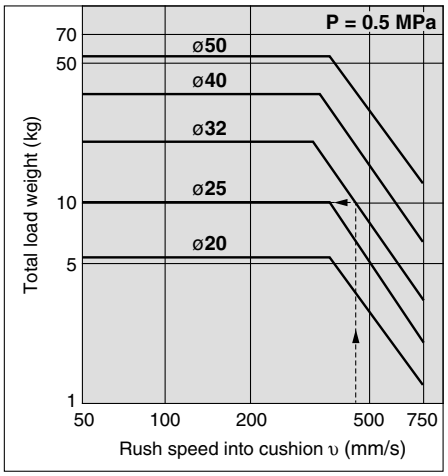

Also, selection can be made by using the graph above.

Example)

Find the maximum load weight when using a cylinder with ø32, stroke 500 mm, with rear plate as a lifter at an average speed of υa 300 mm/s.

Rush speed into cushion υ is as follows:

υ = 1.4 x 300 = 420 mm/s.

Extend upward from 420 mm/s on the axis in the graph until crossing at the line of bore size 32. Extend leftward from the intersection to find the total weight load 10 kg.

Subtract the moving parts' weight of 3.08 kg from this. (For moving parts, refer to weight.) 6.92 kg will be obtained, which is equal to the maximum load weight.

⚠Caution

In a horizontal application, pay attention to that the load weight should not exceed the allowable end load given on page 44 through to 47.

Air-hydro

Low pressure hydraulic cylinder of 1.0 MPa or less
Through the concurrent use of the CC series air-hydro unit, it becomes possible to operate at a constant or low speed or to effect an intermediate stop, just like a hydraulic unit, while using pneumatic equipment such as a valve.

MGC**H** | Bearing | Mounting | Bore size | Port thread | – | Stroke | – | With/Without rear plate

Air-hydro

Specifications

Bore size (mm)	**20, 25, 32, 40, 50**
Action	Double acting
Fluid	Turbine oil
Proof pressure	1.5 MPa
Maximum operating pressure	1.0 MPa
Minimum operating pressure	0.18 MPa (Horizontal with no load)
Piston speed	15 to 300 mm/s
Cushion	Without
Ambient and fluid temperature	+5 to 60°C
Thread tolerance	JIS Class 2
Mounting	Basic, Front mounting flange

∗ For specifications other than the above, refer to page 41.
∗ Auto switches can be mounted.

Dimensions (Dimensions other than the below are the same as the standard type.)

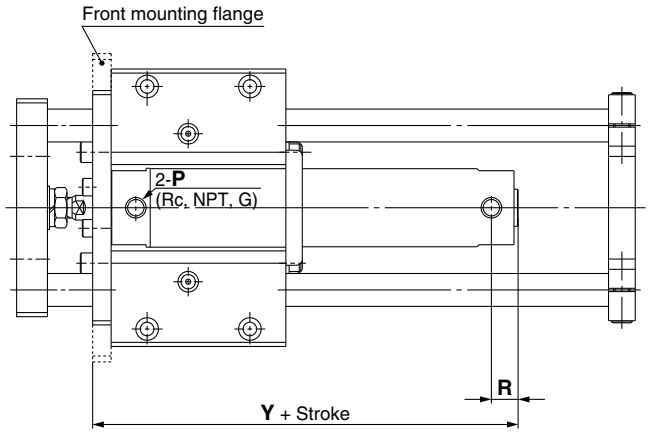

(mm)

Bore size (mm)	P	R	Y
20	1/8	14	88
25	1/8	14	88
32	1/8	14	90
40	1/8	15	101
50	1/4	16	116

Copper-free / Fluoro-free (For CRT production process)

To prevent the influence of copper ions or halogen ions during CRT manufacturing processes, copper and fluorine materials are not used in the component parts.

20-MGC | Bearing | Mounting | Bore size | Port thread | – | Stroke | – | With/Without rear plate

Copper-free / Fluoro-free

Specifications

Bore size (mm)	**20, 25, 32, 40, 50**
Action	Double acting
Fluid	Air
Maximum operating pressure	1.0 MPa
Minimum operating pressure	0.15 MPa (Horizontal with no load)
Cushion	Air cushion
Mounting	Basic, Front mounting flange

∗ For specifications other than the above, refer to page 41. For dimensions, refer to page 50 through to 51.
∗ Auto switches can be mounted.

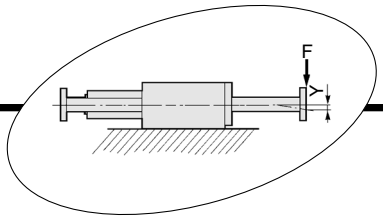

Slide Bearing
Allowable End Load and Deflection

MGCM□20-Stroke-R

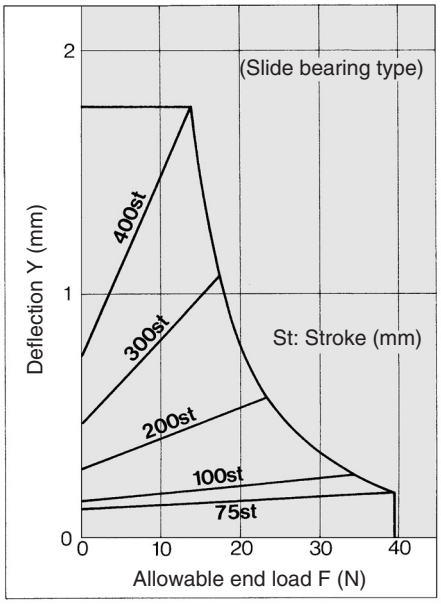

MGCM□25-Stroke-R

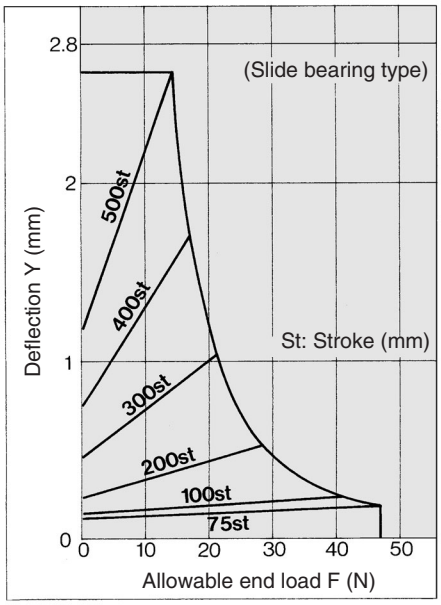

MGCM□32-Stroke-R

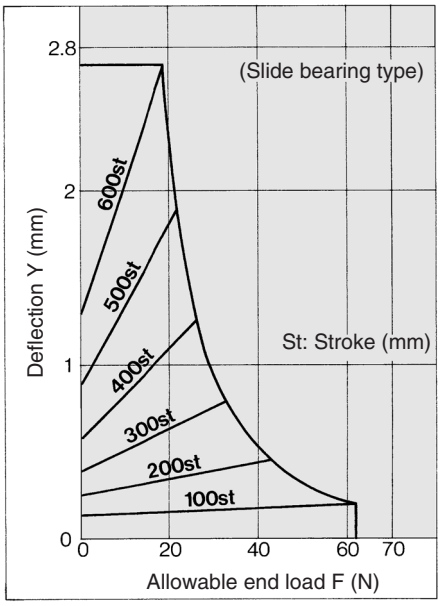

MGCM□40-Stroke-R

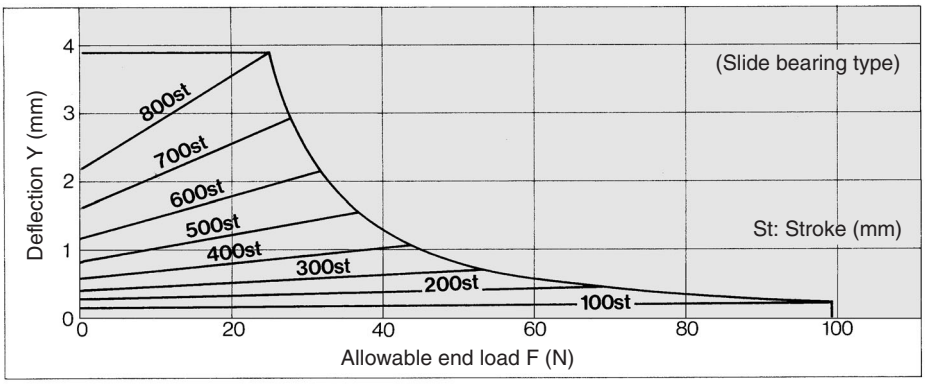

MGCM□50-Stroke-R

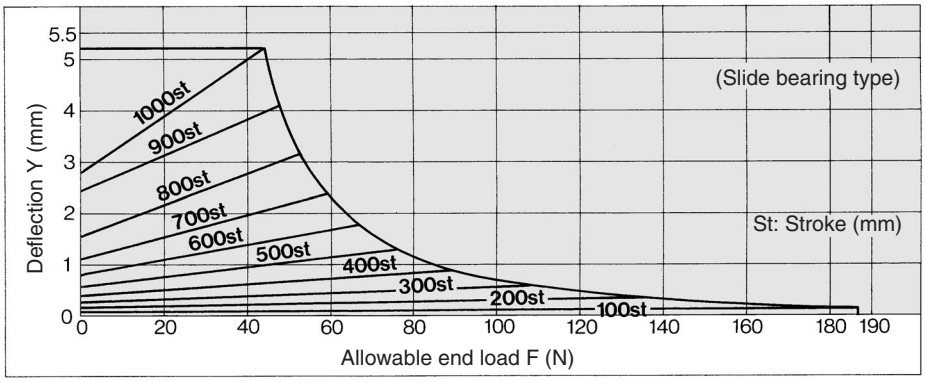

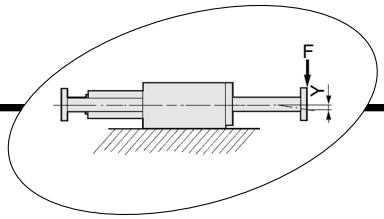

Ball Bushing Bearing
Allowable End Load and Deflection

MGCL□20-Stroke-R

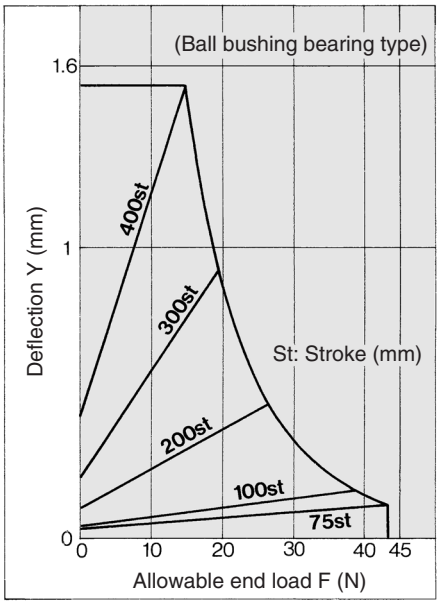

MGCL□25-Stroke-R

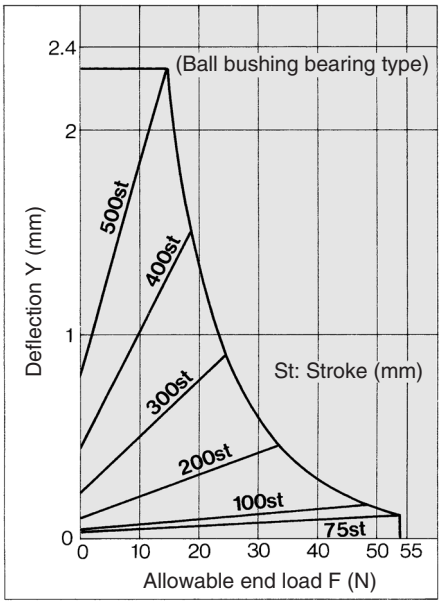

MGCL□32-Stroke-R

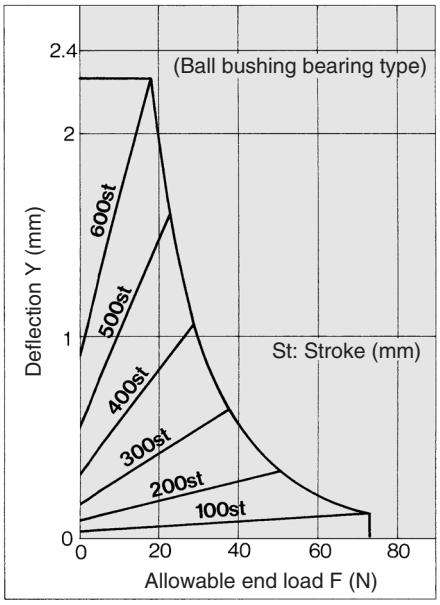

MGCL□40-Stroke-R

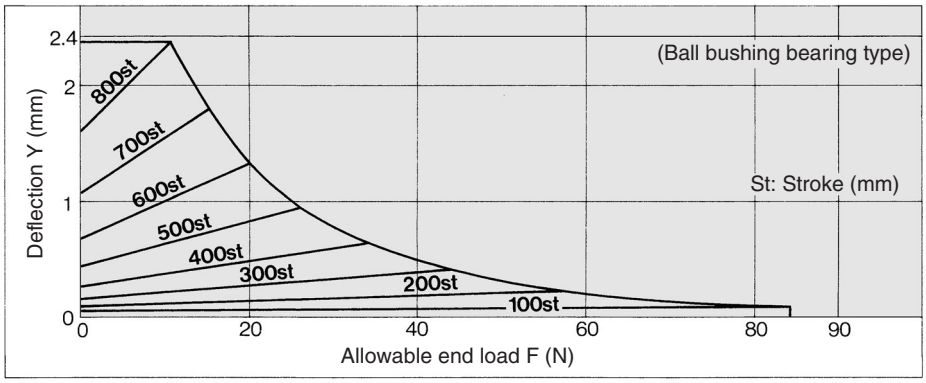

MGCL□50-Stroke-R

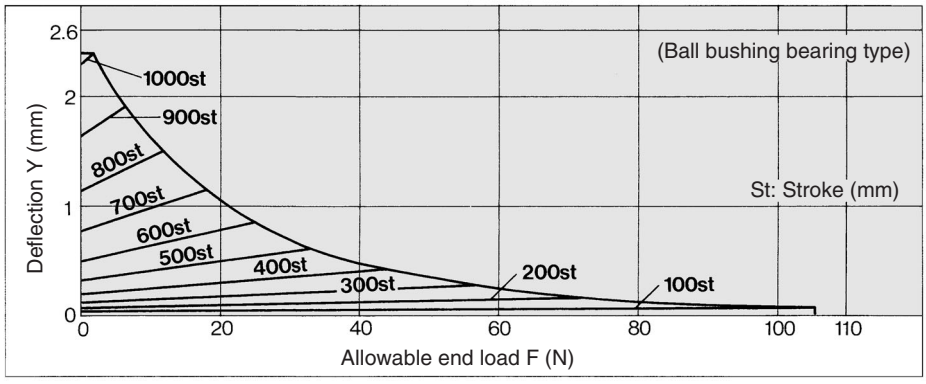

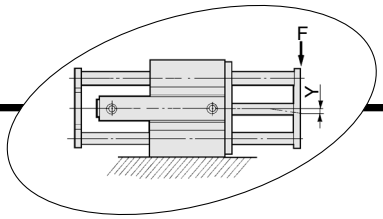

Slide Bearing
Allowable End Load and Deflection

MGCM□20-Stroke-R

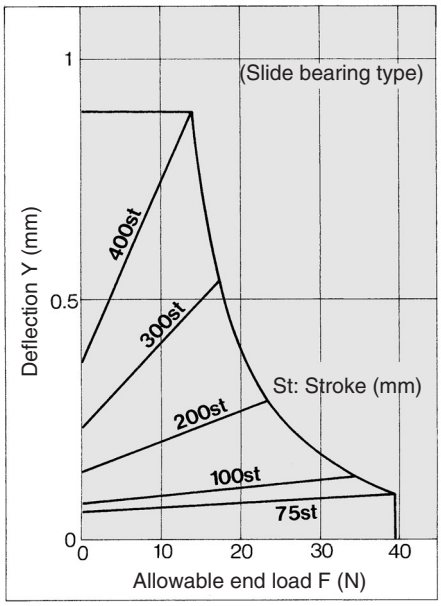

MGCM□25-Stroke-R

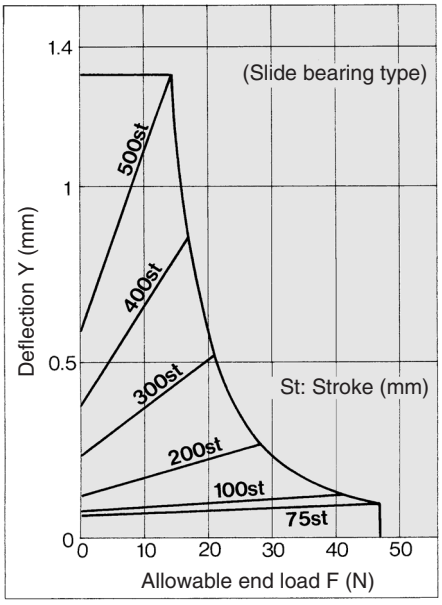

MGCM□32-Stroke-R

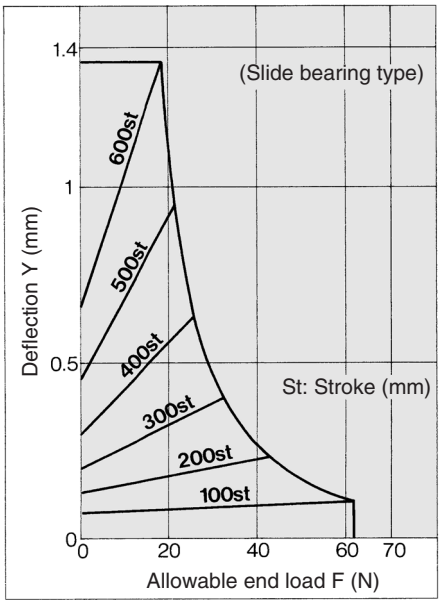

MGCM□40-Stroke-R

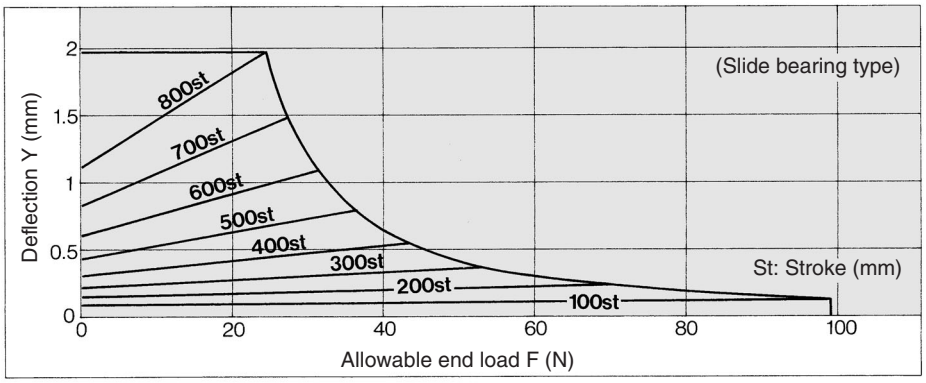

MGCM□50-Stroke-R

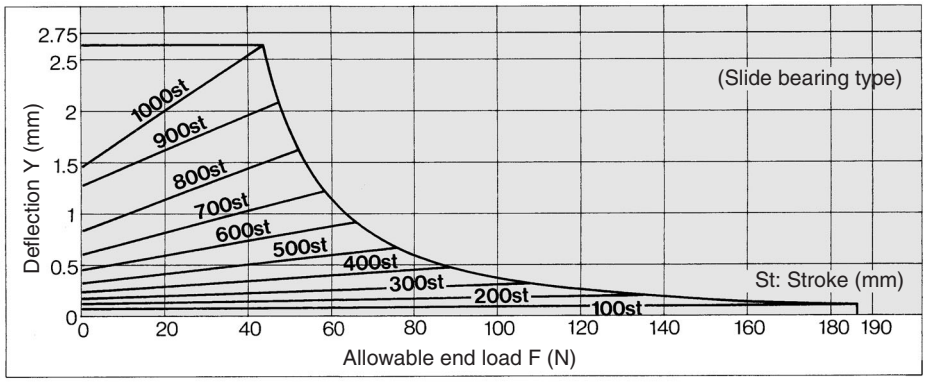

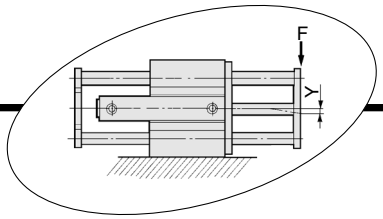

Ball Bushing Bearing
Allowable End Load and Deflection

MGCL□20-Stroke-R

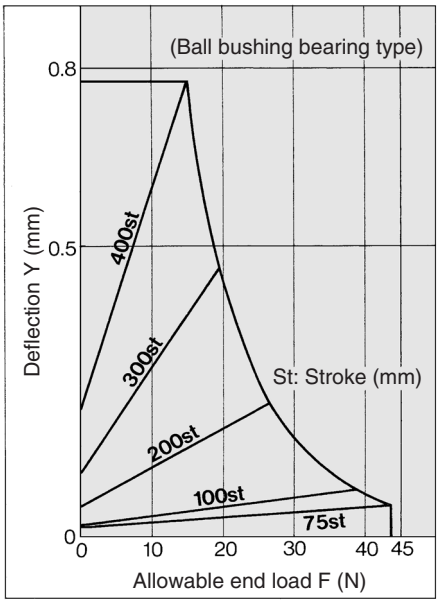

MGCL□25-Stroke-R

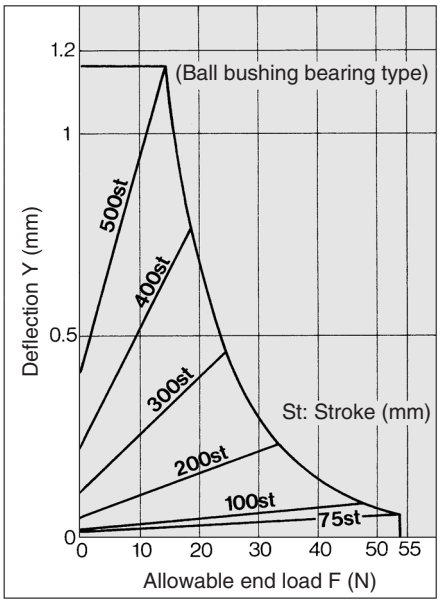

MGCL□32-Stroke-R

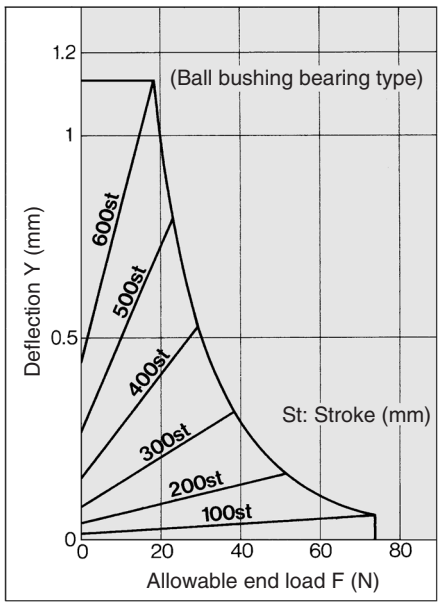

MGCL□40-Stroke-R

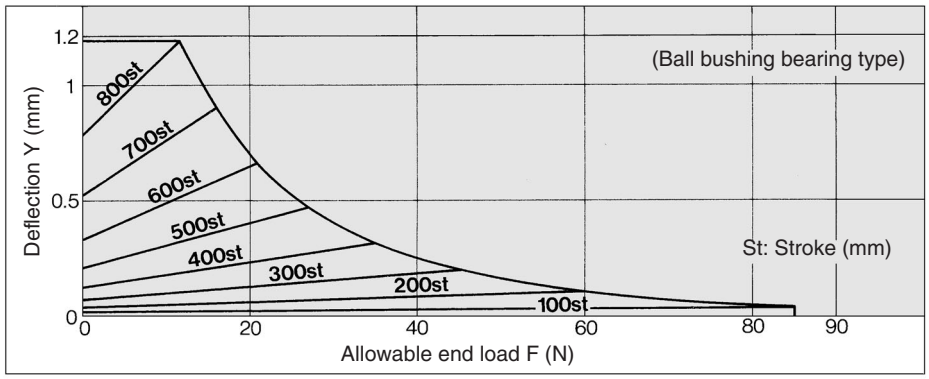

MGCL□50-Stroke-R

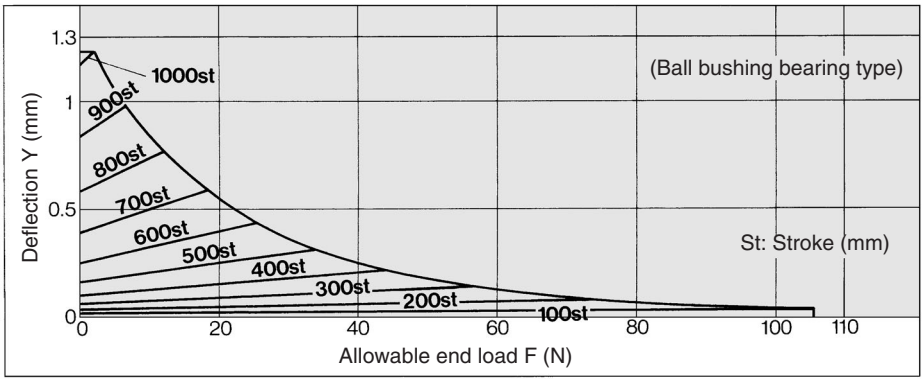

Allowable Eccentric Load

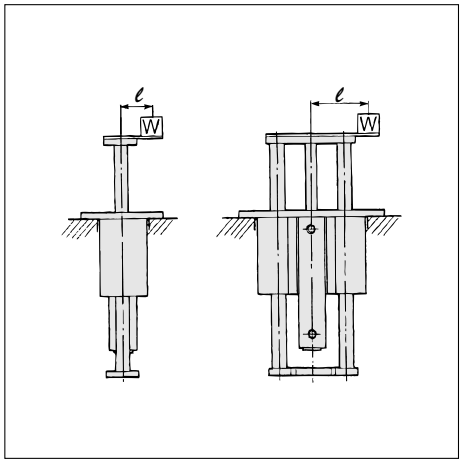

Slide Bearing
MGCM□□- Stroke -R

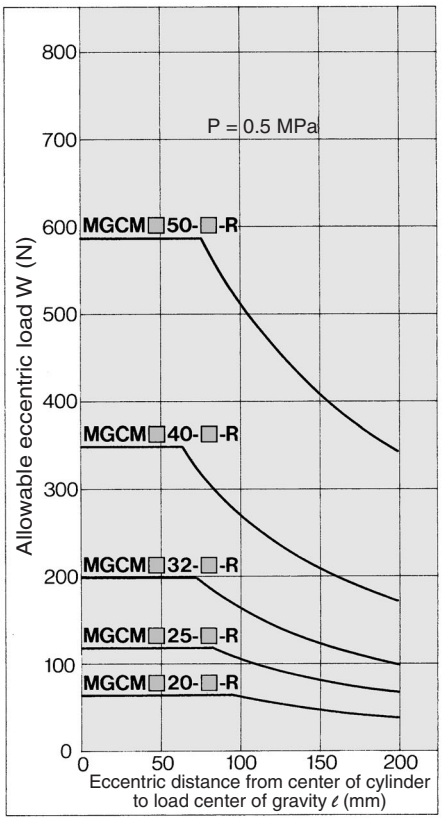

(Set the maximum allowable load so that it does not exceed the following percentages of the theoretical output: 40% for ø20, 50% for ø32, 55% for ø40 and 60% or less for ø50, respectively.)

Ball Bushing Bearing
MGCL□□- Stroke -R

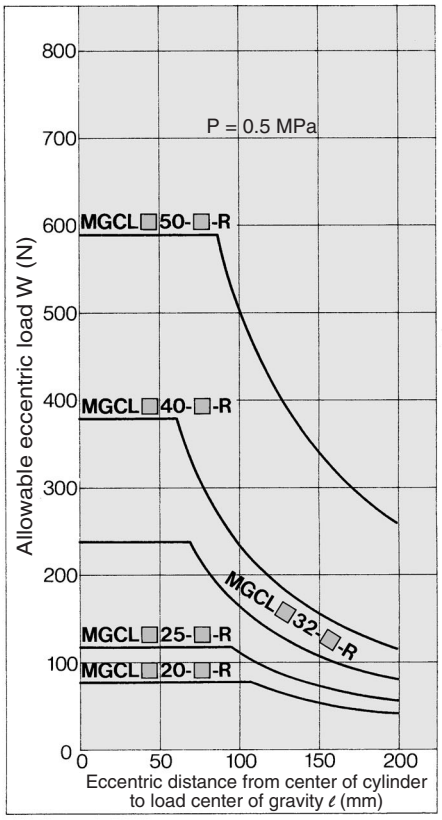

(Set the maximum allowable load so that it does not exceed the following percentages of the theoretical output: 40% for ø20, 50% for ø32, 55% for ø40 and 60% or less for ø50, respectively.)

Construction: With Rear Plate

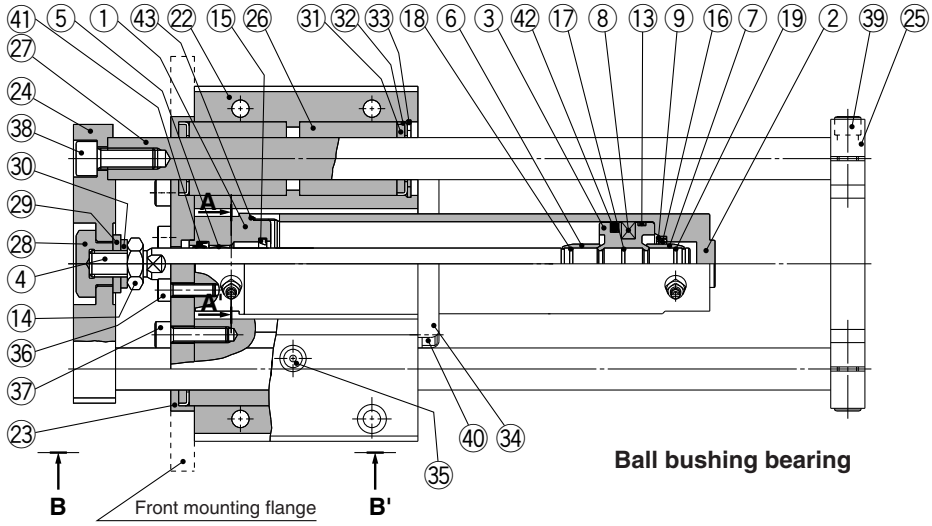

Ball bushing bearing

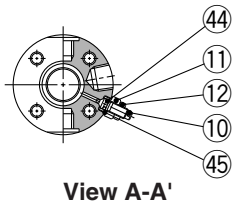

View A-A'

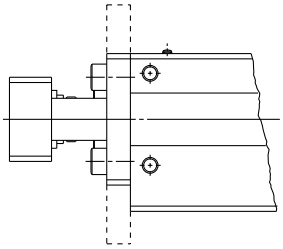

View B-B'

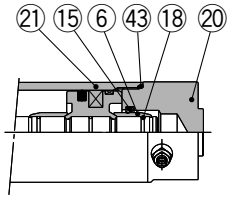

Long stroke

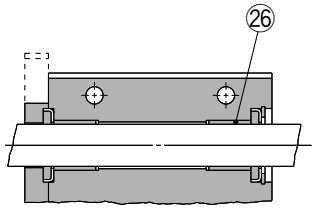

Slide bearing

Component Parts

No.	Description	Material	Note	
1	**Rod cover**	Aluminum alloy	Clear hard anodized	
2	**Tube cover**	Aluminum alloy	Clear hard anodized	
3	**Piston**	Aluminum alloy	Chromated	
4	**Piston rod**	Carbon steel	Hard chrome plated	ø20, ø25 are stainless steel
5	**Bushing**	Bearing alloy		
6	**Cushion ring A**	Brass		
7	**Cushion ring B**	Brass	Note 1)	
8	**Magnet**	—		
9	**Seal retainer**	Rolled steel	Nickel plated (Nothing for long stroke)	
10	**Cushion valve**	Rolled steel	Electroless nickel plated	
11	**Packing retainer**	Rolled steel	Electroless nickel plated	
12	**Lock nut**	Rolled steel	Nickel plated	
13	**Wear ring**	Resin		
14	**Rod end nut**	Rolled steel	Nickel plated	
15	**Cushion seal A**	Urethane		
16	**Cushion seal B**	Urethane	Note 2)	
17	**Piston gasket**	NBR		
18	**Cushion ring gasket A**	NBR		
19	**Cushion ring gasket B**	NBR	W/ cushion ring gasket A: Except standard ø20 and ø25	
20	**Head cover**	Aluminum alloy	White hard anodized	For long stroke
21	**Cylinder tube**	Aluminum alloy	Hard anodized	
22	**Guide body**	Aluminum alloy	White anodized	
23	**Small flange**	Rolled steel	Flat nickel plated	For basic type
	Large flange			For front mounting flange style
24	**Front plate**	Rolled steel	Flat nickel plated	
25	**Rear plate**	Cast iron	Metallic gold	
26	**Slide bearing**	Bearing alloy	For slide bearing	
	Ball bushing bearing	—	For ball bushing bearing	
27	**Guide rod**	Carbon steel	Carbon steel	For slide bearing
		High carbon chrome bearing steel	Quenched, Hard chrome plated	For ball bushing bearing
28	**End bracket**	Carbon steel	Flat nickel plated	
29	**Washer**	Rolled steel	Nickel plated	

Note 1) Common with cushion ring A: Except standard ø20 and ø25
Note 2) Common with cushion packing A: Except standard ø20 and ø25
Note 3) In the case of the product a without rear plate, ㉕ and ㊴ will not be required.

Component Parts

No.	Description	Material	Note	
30	**Spring washer**	Steel wire	Nickel plated	
31	**Felt**	Felt		
32	**Holder**	Stainless steel		
33	**C-type snap ring for hole**	Carbon tool steel	Nickel plated	
34	**Bracket**	Stainless steel		
35	**Grease nipple**	—	Nickel plated	
36	**Hexagon socket head cap screw**	Chromium molybdenum steel	Nickel plated	For cylinder mounting
37	**Hexagon socket head cap screw**	Chromium molybdenum steel	Nickel plated	Small/Large flange mounting
38	**Hexagon socket head cap screw**	Chromium molybdenum steel	Nickel plated	For front plate mounting
39	**Hexagon socket head cap screw**	Chromium molybdenum steel	Nickel plated	For rear plate mounting
40	**Hexagon socket head cap screw**	Chromium molybdenum steel	Nickel plated	For bracket mounting
41	**Rod seal**	NBR		
42	**Piston seal**	NBR		
43	**Tube gasket**	NBR		
44	**Valve seal**	NBR		
45	**Valve retainer gasket**	NBR		

Replacement Parts: Seal Kit

Bore size (mm)	Kit no.	Contents
20	CG1A20-PS	Set of nos. above ㊶, ㊷, ㊸, ㊹, ㊺.
25	CG1A25-PS	
32	CG1A32-PS	
40	CG1A40-PS	

∗ Seal kit includes ㊶ to ㊺. Order the seal kit, based upon the bore size.

⚠Caution

When disassembling basic cylinders with bore sizes of ø20 through ø40, grip the double flat part of either the head cover or the rod cover with a vise and loosen the other side with a wrench or a monkey wrench, etc., and then remove the cover. When re-tightening, tighten approximately 2 degrees more than the original position.
(Cylinders with ø50 or larger bore sizes are tightened with a large tightening torque and cannot be disassembled. Please contact SMC when disassembly is required.)

Dimensions

Basic: With rear plate
MGC□B□□-□-R

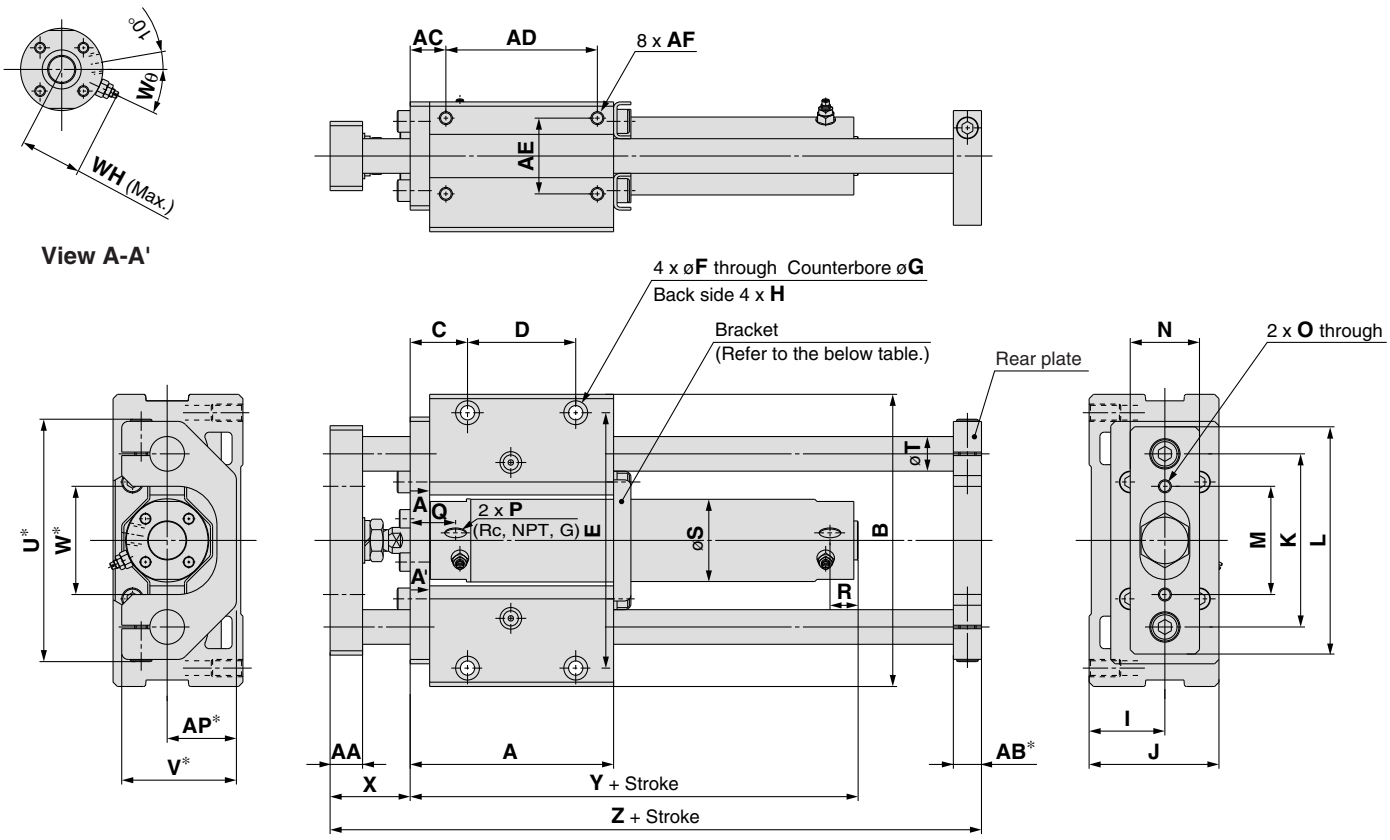

(mm)

Bore size (mm)	Stroke range (mm)	A	AA	AB	AC	AD	AE	AF	AP	B	C	D	E	F	G	H
20	75, 100, 125, 150, 200	84	12	13	15.5	62	25	M5 depth 10	22	106	24	45	90	5.6	9.5 depth 6	M6 depth 10
25	75, 100, 125, 150 200, 250, 300	89	16	13	16.5	65	30	M6 depth 12	27	120	26.5	45	103	6.8	11 depth 8	M8 depth 14
32		94	16	13	16.5	70	35	M6 depth 12	32	135	26.5	50	118	6.8	11 depth 8	M8 depth 14
40		107	19	16	22	75	40	M8 depth 16	37	160	34.5	50	140	8.6	14 depth 10	M10 depth 18
50		142	25	19	22	110	45	M10 depth 20	42	194	37	80	170	10.5	17 depth 12	M12 depth 21

Bore size (mm)	I	J	K	L	M	N	O	P Note 2)	Q	R	S	T	U	V	W	WH	Wθ	X	Y	Z
20	25	44	60	80	38	25	M6	M5	21	12	26	12	86	40	36	23	30°	30	80	140
25	30	52	70	95	46	32	M6	M5	21	12	31	13	98	47	44	25	30°	37	80	153
32	35	60	80	105	50	32	M6	1/8	21	12	38	16	112	53	50	28.5	25°	37	82	161
40	40	70	95	125	60	38	M8	1/8	25	12	47	20	132	63	60	33	20°	44	92	188
50	45	82.5	115	150	75	50	M8	1/4	26	14	58	25	162	73	70	40.5	20°	55	104	241

Without Rear Plate

Bore size (mm)	Z
20	119
25	131
32	136
40	156
50	202

Long Stroke

Bore size (mm)	Stroke range (mm)	R	Y
20	250 to 400	14	88
25	350 to 500	14	88
32	350 to 600	14	90
40	350 to 800	15	101
50	350 to 1000	16	116

Bracket Mounting Stroke

Bore size (mm)	Bracket mounting stroke
20	100 st or more
25	125 st or more
32	150 st or more
40	200 st or more
50	250 st or more

Note 1) Dimensions marked with "∗" are not required for without rear plate.
Note 2) For bore sizes 20 and 25, M5 is only available.
Rc, NPT, G ports are available for bore size 32 or greater.

Dimensions

Front mounting flange: With rear plate
MGC□F□□-□-R

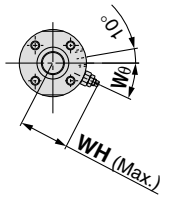

View A-A'

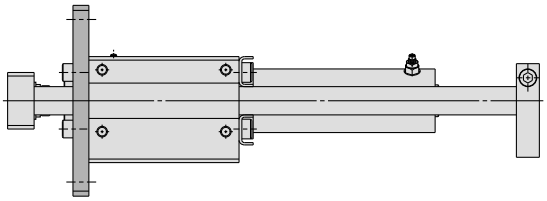

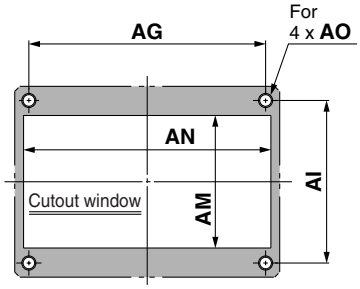

Mounting dimensions

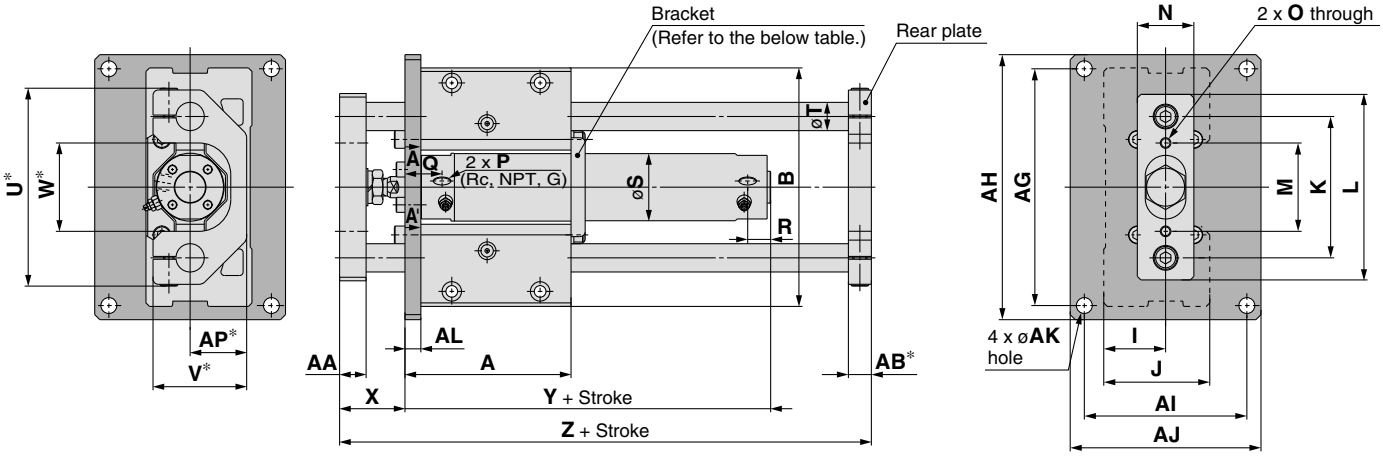

(mm)

Bore size (mm)	Stroke range (mm)	A	AA	AB	AG	AH	AI	AJ	AK	AL	AM	AN	AO	AP	B	I	J	K	L	M	N
20	75, 100, 125, 150, 200	84	12	13	105	120	75	90	6.6	9	55	110	M6	22	106	25	44	60	80	38	25
25	75, 100, 125, 150 200, 250, 300	89	16	13	120	136	84	100	9	9	65	125	M8	27	120	30	52	70	95	46	32
32		94	16	13	134	150	92	108	9	9	75	140	M8	32	135	35	60	80	105	50	32
40		107	19	16	160	176	110	125	9	12	85	165	M8	37	160	40	70	95	125	60	38
50		142	25	19	190	210	115	135	11	12	95	200	M10	42	194	45	82.5	115	150	75	50

Bore size (mm)	O	P Note 2)	Q	R	S	T	U	V	W	WH	Wθ	X	Y	Z
20	M6	M5	21	12	26	12	86	40	36	23	30°	30	80	140
25	M6	M5	21	12	31	13	98	47	44	25	30°	37	80	153
32	M6	1/8	21	12	38	16	112	53	50	28.5	25°	37	82	161
40	M8	1/8	25	12	47	20	132	63	60	33	20°	44	92	188
50	M8	1/4	26	14	58	25	162	73	70	40.5	20°	55	104	241

Without Rear Plate

Bore size (mm)	Z
20	119
25	131
32	136
40	156
50	202

Long Stroke

Bore size (mm)	Stroke range (mm)	R	Y
20	250 to 400	14	88
25	350 to 500	14	88
32	350 to 600	14	90
40	350 to 800	15	101
50	350 to 1000	16	116

Bracket Mounting Stroke

Bore size (mm)	Bracket mounting stroke
20	100 st or more
25	125 st or more
32	150 st or more
40	200 st or more
50	250 st or more

Note 1) Dimensions marked with "∗" are not required for without rear plate.
Note 2) For bore size 20 and 25, M5 is only available.
Rc, NPT, G ports are available for bore size 32 or greater.

Auto Switch Proper Mounting Position (Detection at stroke end) and Its Mounting Height

D-A9 type,
D-M9/M9□W type

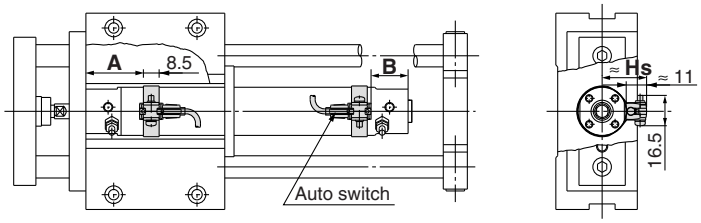

D-C7/C8/H7 type

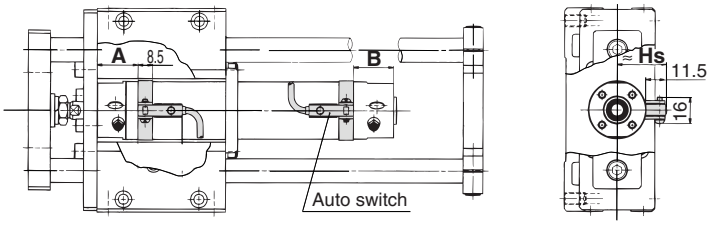

D-B5/B6/G5/K5 type

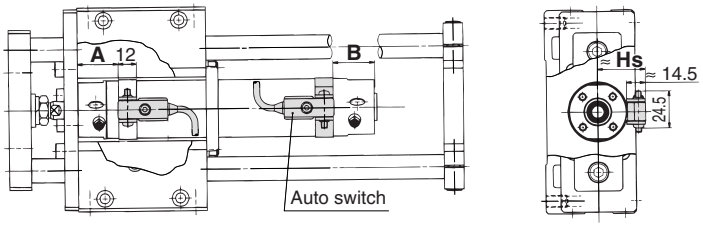

D-B7/B8/G7/K7 type

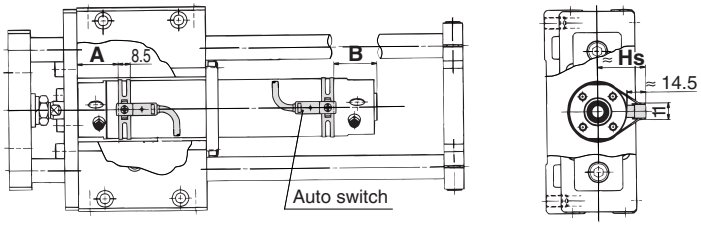

Auto Switch Proper Mounting Position (mm)

Auto switch model / Bore size	D-A9□		D-M9□ D-M9□W		D-B7□/B80 D-B73C D-B80C D-G79/K79 D-K79C		D-C7□ D-C80 D-C73C D-C80C		D-B5□ D-B64		D-B59W		D-H7□W D-H7BAL D-H7□ D-H7C D-H7NF		D-G59F D-G5□W D-K59W D-G5BAL D-G5□ D-K59 D-G5NTL	
	A	B	A	B	A	B	A	B	A	B	A	B	A	B	A	B
20	29	20 (28)	33	24 (32)	30.5	21.5 (29.5)	29.5	20.5 (28.5)	23.5	14.5 (22.5)	26.5	17.5 (25.5)	28.5	19.5 (27.5)	25	16 (24)
25	29	20 (28)	33	24 (32)	30.5	21.5 (29.5)	29.5	20.5 (28.5)	23.5	14.5 (22.5)	26.5	17.5 (25.5)	28.5	19.5 (27.5)	25	16 (24)
32	30	21 (29)	34	25 (33)	31.5	22.5 (30.5)	30.5	21.5 (29.5)	24.5	15.5 (23.5)	27.5	18.5 (26.5)	29.5	20.5 (28.5)	26	17 (25)
40	35	23 (32)	39	27 (36)	36.5	24.5 (33.5)	35.5	23.5 (32.5)	29.5	17.5 (26.5)	32	20.5 (29.5)	34.5	22.5 (31.5)	31	19 (28)
50	42	28 (40)	46	32 (36)	43.5	29.5 (41.5)	42.5	28.5 (40.5)	36.5	22.5 (34.5)	39.5	25.5 (37.5)	41.5	27.5 (39.5)	38	24 (36)

Auto Switch Mounting Height (mm)

Auto switch model / Bore size	D-A9□ D-M9□ D-M9□W	D-C7□/C80 D-H7□ D-H7□W D-H7NF D-H7BAL	D-C73C D-C80C	D-B7□/B80 D-B73C D-B80C D-G79/K79 D-K79C D-H7C D-G5NTL / D-G5□/K59 D-G5□W D-K59W D-B5□/B64 D-B59W D-G5BAL D-G59F
	Hs	Hs	Hs	Hs
20	24	24.5	27	27.5
25	26.5	27	29.5	30
32	30	30.5	33	33.5
40	34.5	35	37.5	38
50	40	40.5	43	43.5

∗ ( ): Values for long strokes, double rods.
Note) When setting an auto switch, confirm the operation and adjust its mounting position.

Minimum Stroke for Auto Switch Mounting

n: Number of auto switches (mm)

Auto switch model	Number of auto switches mounted		
	With 1 pc.	With 2 pcs.	With n pcs.
		Same side	Same side
D-A9□ **D-M9□** **D-M9□W**	10	45 Note)	45 + 45 (n-2)
D-C7□ **D-C80**	10	50	50 + 45 (n-2)
D-H7□ **D-H7□W** **D-H7BAL** **D-H7NF**	10	60	60 + 45 (n-2)
D-C73C **D-C80C** **D-H7C**	10	65	65 + 50 (n-2)
D-B5□ **D-B64** **D-G5□** **D-K59□** **D-B59W**	10	75	75 + 55 (n-2)
D-B7□ **D-B80** **D-G79** **D-K79**	10	45	50 + 45 (n-2)

Note) Caution when two D-A93, M9□, M9□W auto switches are used.

Auto switch model	With two auto switches Same side
	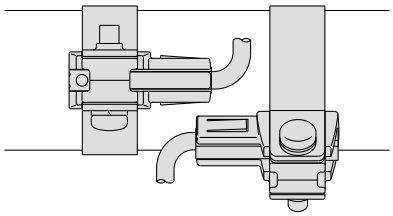 The auto switches are offset (one auto switch is displaced more around the outside of the cylinder tube) so that the auto switches and lead wires do not interfere with each other.
D-A93	Less than 50 stroke
D-M9□ **D-M9□W**	Less than 55 stroke

Operating Range

(mm)

Auto switch model	Bore size				
	20	25	32	40	50
D-A9□	7	6	8	8	8
D-M9□	3	3	4	3.5	4
D-M9□W	5	5.5	5	5.5	6.5
D-B7□/B80 D-B73C/B80C	8	10	9	10	10
D-C7□/C80 D-C73C/C80C	8	10	9	10	10
D-B5□/B64	8	10	9	10	10
D-B59W	13	13	14	14	14
D-G79/K79/K79C	8	10	9	10	10
D-H7□/H7□W D-H7BAL/H7NF	4	4	4.5	5	6
D-H7C	7	8.5	9	10	9.5
D-G5□/K59 D-G5□W/K59W D-G5NTL/G5BAL	4	4	4.5	5	6
D-G59F	5	5	5.5	6	7
D-G5NBL	35	40	40	45	45

∗ This is a guideline including hysteresis, and is not meant to be guaranteed. (Assuming approximately ±30% dispersion.)
Therefore it may vary substantially depending on an ambient environment.

Auto Switch Mounting Bracket Part No.

Auto switch model	Bore size (mm)				
	ø20	ø25	ø32	ø40	ø50
D-A9□ D-M9□ D-M9□W	Note) ①BMA2-020 ②BJ3-1	Note) ①BMA2-025 ②BJ3-1	Note) ①BMA2-032 ②BJ3-1	Note) ①BMA2-040 ②BJ3-1	Note) ①BMA2-050 ②BJ3-1
D-C7□/C80 D-C73C D-C80C D-H7□/H7C D-H7□W D-H7BAL D-H7NF	BMA2-020	BMA2-025	BMA2-032	BMA2-040	BMA2-050
D-B5□/B64 D-B59W D-G5□/K59 D-G5□W/K59W D-G5BAL/G59F D-G5NTL D-G5NBL	BA-01	BA-02	BA-32	BA-04	BA-05
D-B7□/B80 D-B73C/B80C D-G79/K79 D-K79C	BM1-01	BM1-02	BM1-32	BM1-04	BM1-05

Note) Two types of brackets are used as a set.

[Mounting screws set made of stainless steel]

The following set of mounting screws made of stainless steel are also available. Use it in accordance with the operating environment. (Please order the switch mounting bracket separately, since it is not included.)

BBA3: For D-B5, B6, G5, K5 type

BBA4: For D-C7, C8, H7 type

"D-H7BAL/G5BAL" switch is set on the cylinder with the stainless steel screws above when shipped.

When only a switch is shipped independently, "BBA3" or "BBA4" screws are attached.

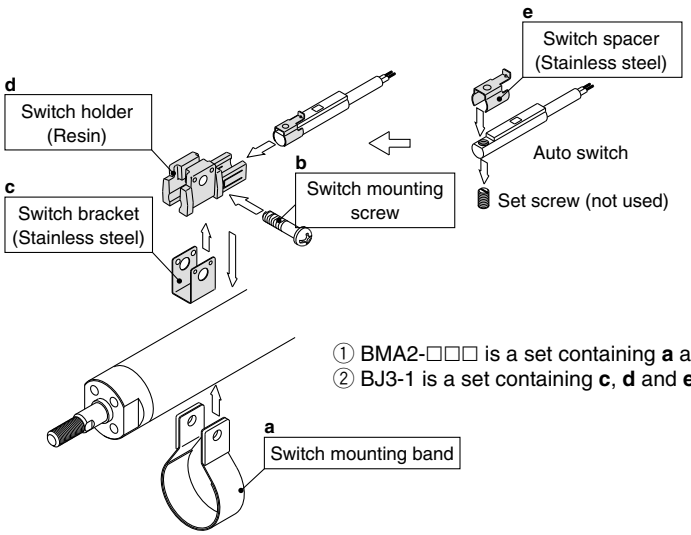

① BMA2-□□□ is a set containing **a** and **b** in the drawing.
② BJ3-1 is a set containing **c**, **d** and **e** in the drawing.

Other than the applicable auto switches listed in "How to Order", the following auto switches can be mounted.
For detailed specifications, refer to SMC's "Best Pneumatics" catalogue, etc.

Type	Model	Electrical entry (Direction)	Features	Applicable bore size
Reed switch	D-C73, C76, B73, B73C, B76	Grommet (in-line)	—	ø20 to ø50
	D-C80, B80C		Without indicator light	
	D-B53		—	
Solid state switch	D-H7A1, H7A2, H7B, G79, K79, K79C		—	
	D-H7NW, H7PW, H7BW		Diagnostic indication (2-colour indication)	
	D-G5NTL		With timer	

∗ With pre-wired connector is available for solid state auto switches. For details, refer to SMC's "Best Pneumatics" catalogue.
∗ Normally closed (NC = b contact), solid state switches (D-F9G, F9H type) are also available. For details, refer to SMC's "Best Pneumatics" catalogue.
∗ Wide range detection type, solid state auto switch (D-G5NBL type) is also available. For details, refer to SMC's "Best Pneumatics" catalogue.

Series MGC
Specific Product Precautions

Be sure to read this before handling. For Safety Instructions, Actuators Common Precautions, refer to "Precautions for Handling Pneumatic Devices" (M-03-E3A).

Mounting and Adjustment

⚠ Warning

1. Installing a protective cover (In the case of rear plate)

During mounting, handling and operation, the rear plate makes reciprocating movements. Therefore, pay careful attention not to insert your hand, etc., between the cylinder and the rear plate.

When you are going to fit this product to the outside of your equipment, take preventative measures such as installing a protective cover.

Protective cover installation example

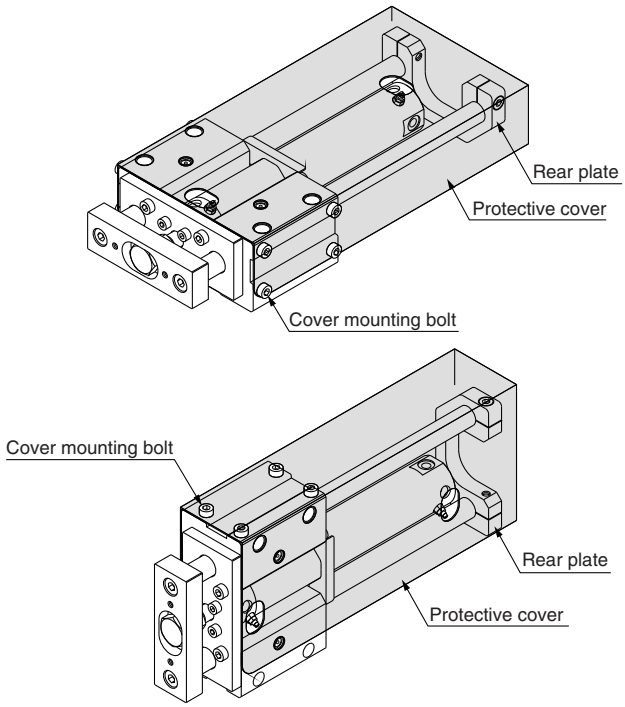

⚠ Caution

1. Use caution not to scratch or dent the sliding part of the guide rod.

Because the outer circumference of the guide rod is manufactured with precise tolerances, even a slight deformation, scratch, or gouge can lead to faulty operation or reduced durability.

2. When fitting the guide body, use the guide body with a fitting surface that has a high level of flatness.

If the guide rod has twisted, operation resistance will become abnormally higher and the bearing will wear at an early stage, thereby resulting in poor performance.

3. Allow an ample space around the cylinder.

Ensure enough clearance around the cylinder to allow for unobstructed maintenance and inspection work.

4. Do not adjust the rod stroke by moving the rear plates.

The resulting impact cannot be absorbed easily, the stroke position cannot be maintained, and faulty operation may ensue.

5. Lubrication

To prevent foreign particles from mixing with the grease, use a grease applicator that has a check valve. Use a high-quality lithium soap-based no. 2 grease.

6. Mounting orientation

For ceiling mount (opening of the rear plate face downwards), the base cylinder head end and the rear plate may interfere due to the deflection of the guide rod.

Series MGG/MGC
Auto Switch Specifications

Auto Switch Common Specifications

Type	Reed switch	Solid state switch
Leakage current	None	3-wire: 100 μA or less 2-wire: 0.8 mA or less
Operating time	1.2 ms	1 ms or less
Impact resistance	300 m/s^2	1000 m/s^2
Insulation resistance	50 MΩ or more at 500 VDC Mega (between lead wire and case)	
Withstand voltage	1500 VAC for 1 minute (between lead wire and case) Note)	1000 VAC for 1 minute (between lead wire and case)
Ambient temperature	–10 to 60°C	
Enclosure	IEC529 standard IP67, JIS C 0920 waterproof construction	
Standard	Conforming to CE Standards	

Note) D-C73C/C80C type: 1000 VAC/min. (Between lead wire and case)

Lead Wire Length

Lead wire length indication

(Example) **D-M9BW L**

Lead wire length

-	0.5 m
M	1 m
L	3 m
Z	5 m

Note 1) Applicable auto switch with 5 m lead wire "Z"
Solid state switch: Manufactured upon receipt of order as standard.
Note 2) To designate solid state switches with flexible specifications, add "-61" after the lead wire length. Flexible cable is used for D-M9□, D-M9□W as standard. There is no need to place the suffix -61 at the end of part number.

(Example) **D-H7BAL- 61**

Flexible specification

Note 3) 1 m (M): D-M9□W only.
Note 4) Lead wire tolerance

Lead wire length	Tolerance
0.5 m	±15 mm
1 m	±30 mm
3 m	±90 mm
5 m	±150 mm

Part No. of Lead Wires with Connectors (Applicable for Connector Type Only)

Model	Lead wire length
D-LC05	0.5 m
D-LC30	3 m
D-LC50	5 m

Contact Protection Boxes: CD-P11, CD-P12

<Applicable switch model>

D-A9/C73C/C80C/B7□/B8□ type
The auto switches below do not have a built-in contact protection circuit. Therefore, please use a contact protection box with the switch for any of the following cases:
① **Where the operation load is an inductive load.**
② **Where the wiring length to load is greater than 5 m.**
③ **Where the load voltage is 100 VAC.**
The contact life may be shortened (due to permanent energising conditions).

Specifications

Part no.	CD-P11		CD-P12
Load voltage	100 VAC	200 VAC	24 VDC
Max. load current	25 mA	12.5 mA	50 mA

∗ Lead wire length —— Switch connection side 0.5 m
Load connection side 0.5 m



Internal Circuit

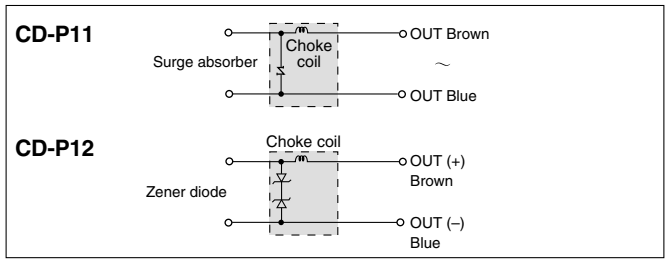

Dimensions

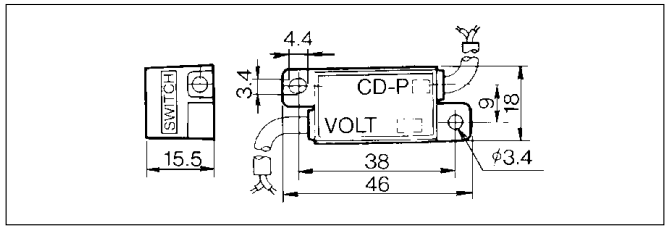

Connection

To connect a switch unit to a contact protection box, connect the lead wire from the side of the contact protection box marked SWITCH to the lead wire coming out of the switch unit. Keep the switch as close as possible to the contact protection box, with a lead wire length of no more than 1 metre.

Auto Switch Connections and Examples

Basic Wiring

Solid state 3-wire, NPN

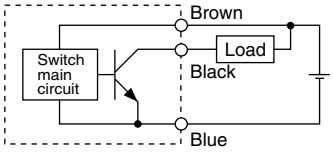

Solid state 3-wire, PNP

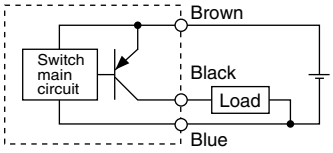

2-wire (Solid state)

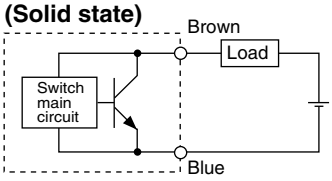

2-wire (Reed)

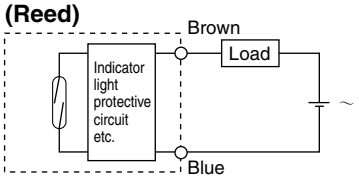

(Power supplies for switch and load are separate.)

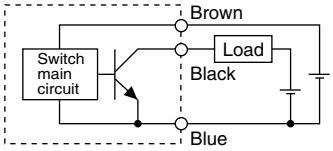

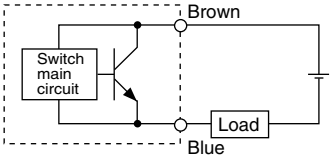

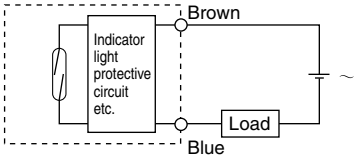

Example of Connection to PLC (Programmable Logic Controller)

• Sink input specification

3-wire, NPN

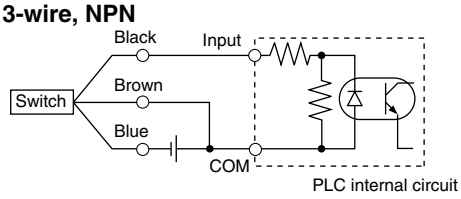

2-wire

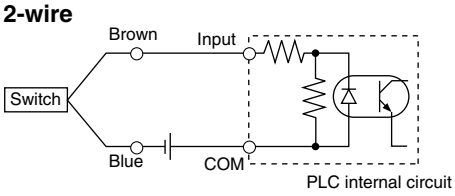

• Source input specification

3-wire, PNP

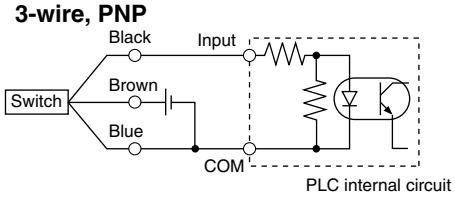

2-wire

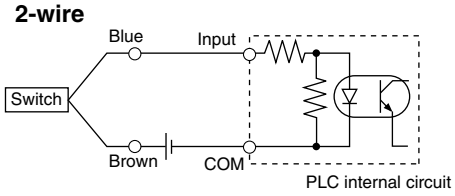

Connect according to the applicable PLC input specifications, since the connection method will vary depending on the PLC input specifications.

Example of AND (Serial) and OR (Parallel) Connection

• 3-wire

AND connection for NPN output (using relays)

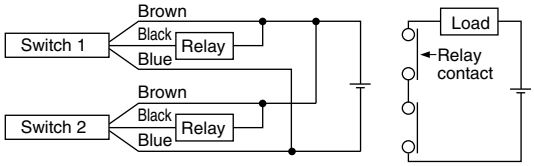

AND connection for NPN output (performed with switches only)

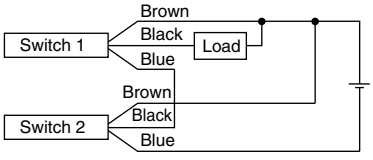

The indicator lights will illuminate when both switches are turned ON.

OR connection for NPN output

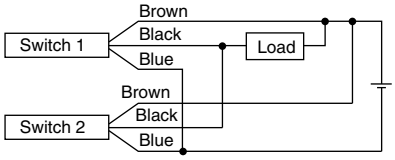

2-wire with 2-switch AND connection

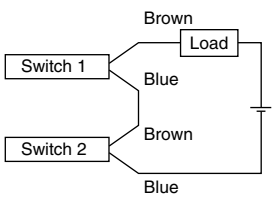

When two switches are connected in series, a load may malfunction because the load voltage will decrease when in the ON state.
The indicator lights will illuminate if both of the switches are in the ON state.

$$\text{Load voltage at ON} = \left(\text{Power supply voltage} - \text{Residual voltage}\right) \times 2 \text{ pcs.}$$
$$= 24 \text{ V} - 4 \text{ V} \times 2 \text{ pcs.}$$
$$= 16 \text{ V}$$

Example: Power supply is 24 VDC.
Internal voltage drop in switch is 4 V.

2-wire with 2-switch OR connection

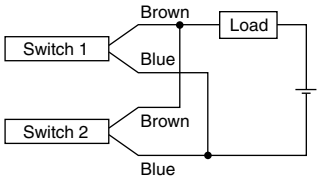

(Solid state)
When two switches are connected in parallel, a malfunction may occur because the load voltage will increase when in the OFF state.

$$\text{Load voltage at OFF} = \text{Leakage current} \times 2 \text{ pcs.} \times \text{Load impedance}$$
$$= 1 \text{ mA} \times 2 \text{ pcs.} \times 3 \text{ k}\Omega$$
$$= 6 \text{ V}$$

Example: Load impedance is 3 kΩ.
Leakage current from switch is 1 mA.

(Reed)
Because there is no current leakage, the load voltage will not increase when turned OFF. However, depending on the number of switches in the ON state, the indicator lights may sometimes dim or not light because of the dispersion and reduction of the current flowing to the switches.

Reed Switch: Direct Mounting Style
D-A90/D-A93/D-A96

CE

Grommet



⚠Caution

Operating Precautions

Fix the switch with the existing screw installed on the switch body. The switch may be damaged if a screw other than the one supplied is used.

Auto Switch Internal Circuit

D-A90

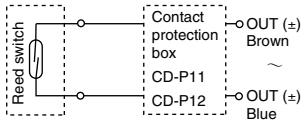

D-A93

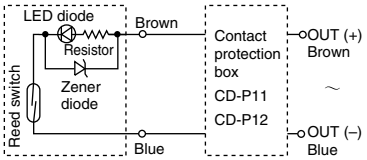

D-A96

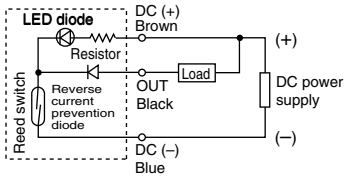

Note) ① In a case where the operation load is an inductive load.
② In a case where the wiring load is greater than 5 m.
③ In a case where the load voltage is 100 VAC.

Use the auto switch with a contact protection box in any of the above mentioned cases. (For details about the contact protection box, refer to page 56.)

Auto Switch Specifications

PLC: Programmable Logic Controller

D-A90 (Without indicator light)			
Auto switch part no.	D-A90		
Electrical entry direction	In-line		
Applicable load	IC circuit, Relay, PLC		
Load voltage	24 VAC/DC or less	48 VAC/DC or less	100 VAC/DC or less
Maximum load current	50 mA	40 mA	20 mA
Contact protection circuit	None		
Internal resistance	1 Ω or less (including lead wire length of 3 m)		

D-A93/D-A96 (With indicator light)			
Auto switch part no.	D-A93		D-A96
Electrical entry direction	In-line		
Applicable load	Relay, PLC		IC circuit
Load voltage	24 VDC	100 VAC	4 to 8 VDC
Load current range and max. load current	5 to 40 mA	5 to 20 mA	20 mA
Contact protection circuit	None		
Internal voltage drop	D-A93 — 2.4 V or less (to 20 mA)/ 3 V or less (to 40 mA)		0.8 V or less
Indicator light	Red LED illuminates when turned ON.		
Standard	Conforming to CE Standards		

- Lead wires
  D-A90/D-A93 — Oilproof heavy-duty vinyl cable: ø2.7, 0.18 mm² x 2 cores (Brown, Blue), 0.5 m
  D-A96 — Oilproof heavy-duty vinyl cable: ø2.7, 0.15 mm² x 3 cores (Brown, Black, Blue), 0.5 m

Note 1) Refer to page 56 for reed switch common specifications.
Note 2) Refer to page 56 for lead wire lengths.

Weight

Unit: g

Auto switch part no.		D-A90	D-A93	D-A96
Lead wire length (m)	0.5	6	6	8
	3	30	30	41

Dimensions

Unit: mm

D-A90/D-A93/D-A96

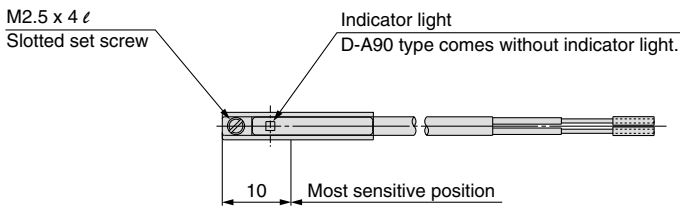

( ): dimensions for D-A93.

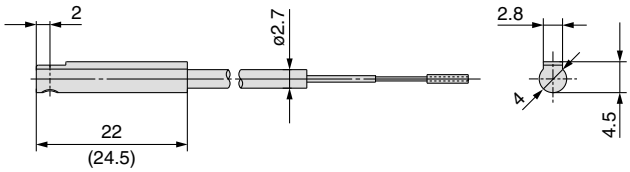

SMC

Reed Switch: Band Mounting Style
D-B54/D-B64

Grommet



Auto Switch Specifications

PLC: Programmable Logic Controller

D-B5 (With indicator light)			
Auto switch part no.	**D-B54**		
Applicable load	Relay, PLC		
Load voltage	24 VDC	100 VAC	200 VAC
Load current range Note 3)	5 to 50 mA	5 to 25 mA	5 to 12.5 mA
Contact protection circuit	Built-in		
Internal voltage drop	2.4 V or less (to 20 mA)/3.5 V or less (to 50 mA)		
Indicator light	Red LED illuminates when turned ON.		
D-B6 (Without indicator light)			
Auto switch part no.	**D-B64**		
Applicable load	Relay, PLC		
Load voltage	24 VAC/DC or less	100 VAC	200 VAC
Maximum load current	Max. 50 mA	Max. 25 mA	Max. 12.5 mA
Contact protection circuit	Built-in		
Internal resistance	25 Ω or less		
Standard	Conforming to CE Standards		

● Lead wires — Oilproof heavy-duty vinyl cable: ø4, 0.3 mm² x 2 cores (Brown, Blue), 0.5 m

Note 1) Refer to page 56 for reed switch common specifications.

Note 2) Refer to page 56 for lead wire lengths.

Note 3) Under 5 mA, the strength of the indicator light is poor. In some cases, visibility of the indicator light will not be possible where the output signal is less than 2.5 mA. However, there is no problem in terms of contact output, when an output signal exceeds 1 mA or more.

Auto Switch Internal Circuit

D-B54

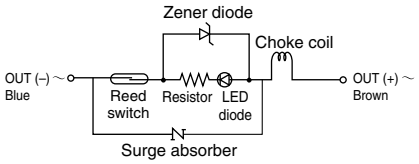

D-B64

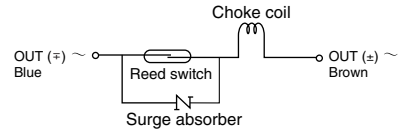

Weight

Unit: g

Auto switch part no.		D-B54	D-B64
Lead wire length (m)	0.5	22	22
	3	78	78
	5	126	—

Dimensions

Unit: mm

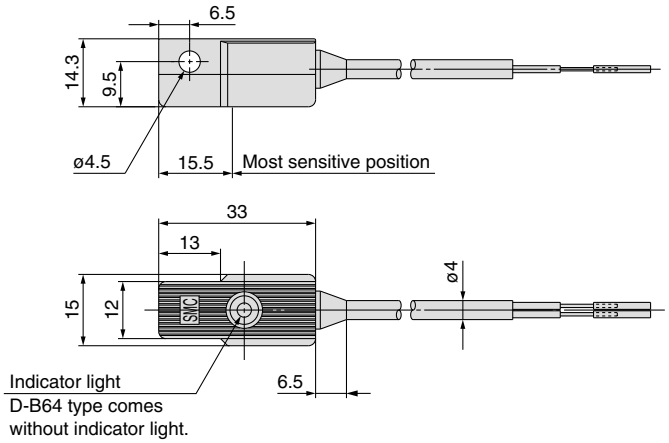

Reed Switch: Band Mounting Style
D-C73C/D-C80C

Connector



⚠Caution

Operating Precautions

1. Confirm that the connector is appropriately tightened. If tightened insufficiently, the waterproof performance will deteriorate.
2. For how to handle a connector, refer to SMC's "Best Pneumatics" catalogue.

Auto Switch Internal Circuit

D-C73C

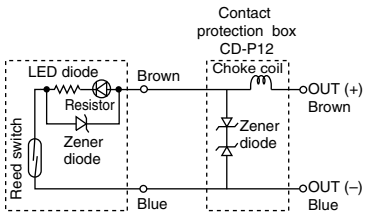

D-C80C

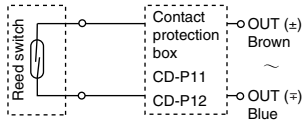

Note) ① In a case where the operation load is an inductive load.
② In a case where the wiring load is greater than 5 m.

Use the contact protection box in any of the above listed situations. The contact point life may decrease. (Refer to page 56 for contact protection box.)

Auto Switch Specifications

PLC: Programmable Logic Controller

D-C73C (With indicator light)	
Auto switch part no.	**D-C73C**
Applicable load	Relay, PLC
Load voltage	24 VDC
Load current range Note 4)	5 to 40 mA
Contact protection circuit	None
Internal voltage drop	2.4 V or less
Indicator light	Red LED illuminates when turned ON.
D-C80C (Without indicator light)	
Auto switch part no.	**D-C80C**
Applicable load	Relay, PLC
Load voltage	24 VAC/DC or less
Maximum load current	50 mA
Contact protection circuit	None
Internal resistance	1 Ω or less (including lead wire length of 3 m)
Standard	Conforming to CE Standards

● Lead wires — Oilproof heavy-duty vinyl cable: ø3.4, 0.2 mm² x 2 cores (Brown, Blue), 0.5 m
Note 1) Refer to page 56 for reed switch common specifications.
Note 2) Refer to page 56 for lead wire lengths.
Note 3) Lead wire with connector may be shipped with switch.
Note 4) Under 5 mA, the strength of the indicator light is poor. In some cases, visibility of the indicator light will not be possible where the output signal is less than 2.5 mA. However, there is no problem in terms of contact output, when an output signal exceeds 1 mA or more.

Weight

Unit: g

Auto switch part no.		D-C73C	D-C80C
Lead wire length (m)	0.5	14	14
	3	53	53
	5	83	83

Dimensions

Unit: mm

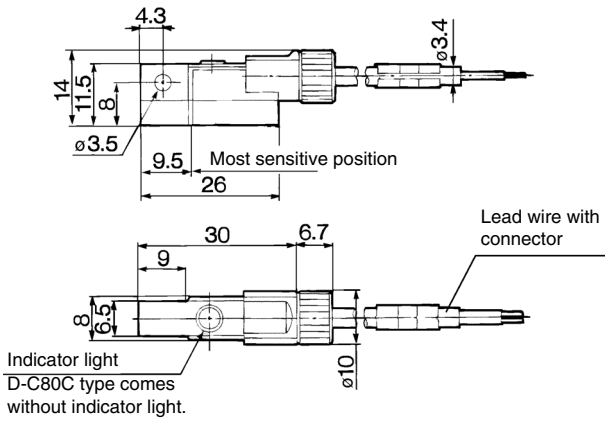

2-Colour Indication Reed Switch: Band Mounting Style
D-B59W

Grommet

- **The optimum operating position can be determined by the colour of the light. (Red → Green ← Red)**



Auto Switch Internal Circuit

D-B59W

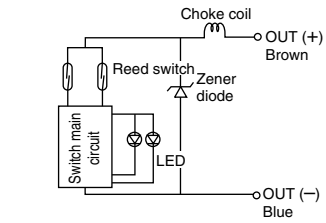

Indicator light / Display method

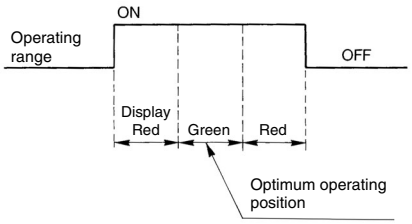

Auto Switch Specifications

PLC: Programmable Logic Controller

D-B59W (With indicator light)	
Auto switch part no.	**D-B59W**
Applicable load	Relay, PLC
Load voltage	24 VDC
Load current range Note 3)	5 to 40 mA
Contact protection circuit	Built-in
Internal voltage drop	4 V or less
Indicator light	Operating position ····· Red LED illuminates. Optimum operating position ····· Green LED illuminates.
Standard	Conforming to CE Standards

● Lead wires — Oilproof heavy-duty vinyl cable: ø4, 0.3 mm² x 2 cores (Brown, Blue), 0.5 m

Note 1) Refer to page 56 for reed switch common specifications.

Note 2) Refer to page 56 for lead wire lengths.

Note 3) Under 5 mA, the strength of the indicator light is poor. In some cases, visibility of the indicator light will not be possible where the output signal is less than 2.5 mA. However, there is no problem in terms of contact output, when an output signal exceeds 1 mA or more.

Weight

Unit: g

Auto switch part no.		**D-B59W**
Lead wire length (m)	0.5	20
	3	76
	5	—

Dimensions

Unit: mm

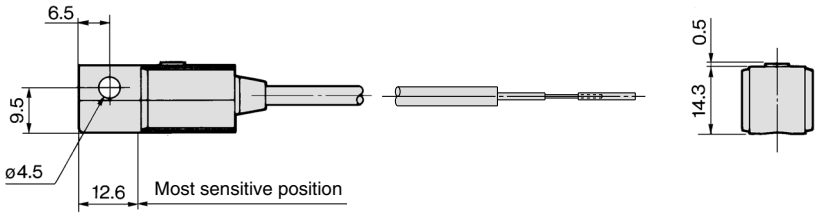

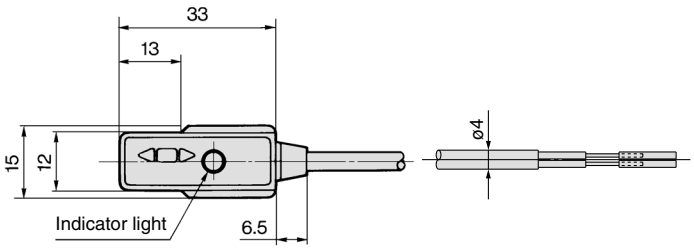

Solid State Switch: Direct Mounting Style
D-M9N/D-M9P/D-M9B

Grommet

- **2-wire load current is reduced (2.5 to 40 mA).**
- **Lead free**
- **UL certified (style 2844) lead cable is used.**
- **Flexibility is 1.5 times greater than the conventional model (SMC comparison).**
- **Flexible cable specification is standard.**



⚠Caution

Operating Precautions

Fix the switch with the existing screw installed on the switch body. The switch may be damaged if a screw other than the one supplied is used.

Auto Switch Internal Circuit

D-M9N

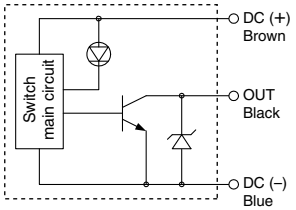

D-M9P

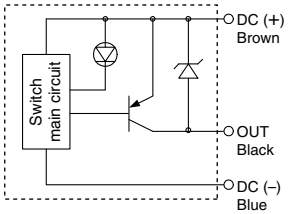

D-M9B

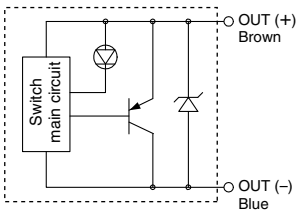

Auto Switch Specifications

PLC: Programmable Logic Controller

D-M9□ (With indicator light)			
Auto switch part no.	D-M9N	D-M9P	D-M9B
Electrical entry direction	In-line		
Wiring type	3-wire		2-wire
Output type	NPN	PNP	—
Applicable load	IC circuit, Relay, PLC		24 VDC relay, PLC
Power supply voltage	5, 12, 24 VDC (4.5 to 28 V)		—
Current consumption	10 mA or less		—
Load voltage	28 VDC or less	—	24 VDC (10 to 28 VDC)
Load current	40 mA or less		2.5 to 40 mA
Internal voltage drop	0.8 V or less		4 V or less
Leakage current	100 μA or less at 24 VDC		0.8 mA or less
Indicator light	Red LED illuminates when turned ON.		
Standard	Conforming to CE Standards		

- Lead wires
  Oilproof heavy-duty vinyl cable: ø2.7 x 3.2 ellipse
  D-M9B 0.15 mm² x 2 cores
  D-M9N, D-M9P 0.15 mm² x 3 cores

Note 1) Refer to page 56 for solid state switch common specifications.
Note 2) Refer to page 56 for lead wire lengths.

Weight

Unit: g

Auto switch part no.		D-M9N	D-M9P	D-M9B
Lead wire length (m)	0.5	8	8	7
	3	41	41	38
	5	68	68	63

Dimensions

Unit: mm

D-M9□

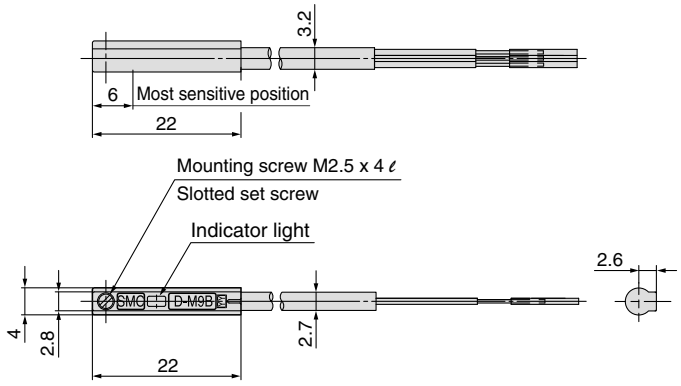

Solid State Switch: Band Mounting Style
D-G59/D-G5P/D-K59

Grommet



Auto Switch Specifications

PLC: Programmable Logic Controller

D-G5□/D-K59 (With indicator light)			
Auto switch part no.	D-G59	D-G5P	D-K59
Wiring type	3-wire		2-wire
Output type	NPN	PNP	—
Applicable load	IC circuit, Relay, PLC		24 VDC relay, PLC
Power supply voltage	5, 12, 24 VDC (4.5 to 28 V)		—
Current consumption	10 mA or less		—
Load voltage	28 VDC or less	—	24 VDC (10 to 28 VDC)
Load current	40 mA or less	80 mA or less	5 to 40 mA
Internal voltage drop	1.5 V or less (0.8 V or less at load current 10 mA)	0.8 V or less	4 V or less
Leakage current	100 μA or less at 24 VDC		0.8 mA or less at 24 VDC
Indicator light	Red LED illuminates when turned ON.		
Standard	Conforming to CE Standards		

● Lead wires — Oilproof heavy-duty vinyl cable: ø4, 0.3 mm² x 3 cores (Brown, Black, Blue), 2 cores (Brown, Blue), 0.5 m

Note 1) Refer to page 56 for solid state switch common specifications.

Note 2) Refer to page 56 for lead wire lengths.

Auto Switch Internal Circuit

D-G59

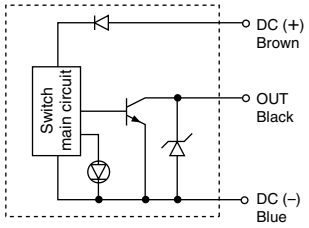

D-G5P

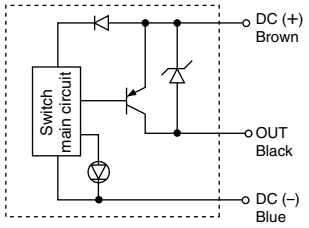

D-K59

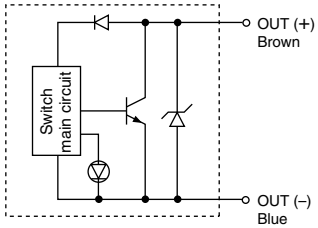

Weight

Unit: g

Auto switch part no.		D-G59	D-G5P	D-K59
Lead wire length (m)	0.5	20	20	18
	3	78	78	68
	5	124	124	108

Dimensions

Unit: mm

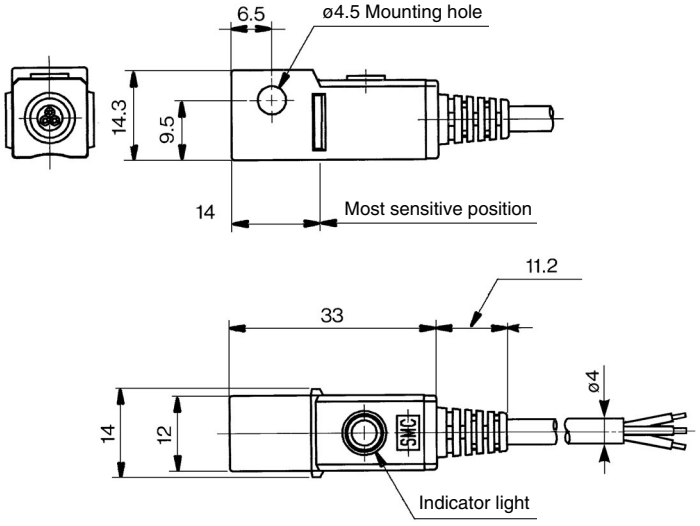

Solid State Switch: Band Mounting Style
D-H7C

Connector

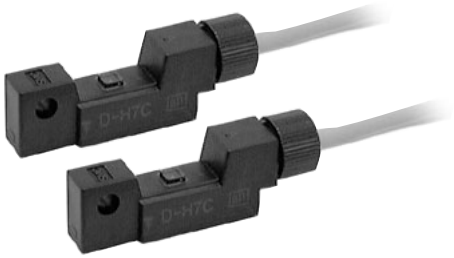

⚠Caution

Operating Precautions

1. Confirm that the connector is appropriately tightened. If tightened insufficiently, the waterproof performance will deteriorate.
2. For how to handle a connector, refer to SMC's "Best Pneumatics 2004" catalogue.

Auto Switch Internal Circuit

D-G59

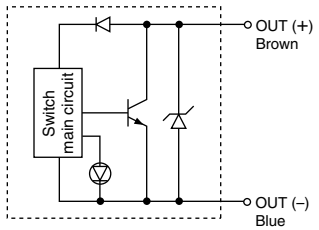

Auto Switch Specifications

PLC: Programmable Logic Controller

D-H7C (With indicator light)	
Auto switch part no.	**D-H7C**
Wiring type	2-wire
Output type	—
Applicable load	24 VDC Relay, PLC
Power supply voltage	—
Current consumption	—
Load voltage	24 VDC (10 to 28 VDC)
Load current	5 to 40 mA
Internal voltage drop	4 V or less
Leakage current	0.8 mA or less at 24 VDC
Indicator light	Red LED illuminates when turned ON.
Standard	Conforming to CE Standards

● Lead wires — Oilproof heavy-duty vinyl cable: ø3.4, 0.2 mm² x 2 cores (Brown, Blue), 0.5 m
Note 1) Refer to page 56 for solid state switch common specifications.
Note 2) Refer to page 56 for lead wire lengths and lead wire with connector.

Weight

Unit: g

Auto switch part no.		**D-H7C**
Lead wire length (m)	0.5	15
	3	54
	5	85

Dimensions

Unit: mm

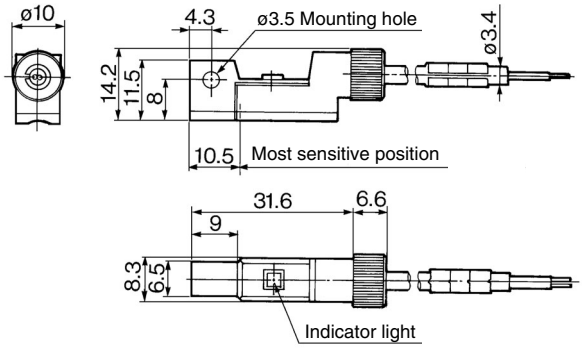

SMC

2-Colour Indication Solid State Switch: Direct Mounting Style
D-M9NW/D-M9PW/D-M9BW

Grommet

- **2-wire load current is reduced (2.5 to 40 mA).**
- **UL certified (style 2844) lead cable is used.**
- **The optimum operating position can be determined by the colour of the light. (Red → Green → Red)**



Auto Switch Specifications

PLC: Programmable Logic Controller

D-M9□W (With indicator light)			
Auto switch part no.	D-M9NW	D-M9PW	D-M9BW
Electrical entry direction	In-line		
Wiring type	3-wire		2-wire
Output type	NPN	PNP	—
Applicable load	IC circuit, Relay, PLC		24 VDC relay, PLC
Power supply voltage	5, 12, 24 VDC (4.5 to 28 V)		—
Current consumption	10 mA or less		—
Load voltage	28 VDC or less	—	24 VDC (10 to 28 VDC)
Load current	40 mA or less		2.5 to 40 mA
Internal voltage drop	0.8 V or less at 10 mA (2 V or less at 40 mA)		4 V or less
Leakage current	100 μA or less at 24 VDC		0.8 mA or less
Indicator light	Operating position ····· Red LED illuminates. Optimum operating position ····· Green LED illuminates.		
Standard	Conforming to CE Standards		

- Lead wires
  Oilproof heavy-duty vinyl cable: ø2.7 x 3.2 ellipse
  D-M9BW 0.15 mm² x 2 cores
  D-M9NW, D-M9PW 0.15 mm² x 3 cores

Note 1) Refer to page 56 for solid state switch common specifications.
Note 2) Refer to page 56 for lead wire lengths.

Weight

Unit: g

Auto switch part no.		D-M9NW	D-M9PW	D-M9BW
Lead wire length (m)	0.5	8	8	7
	1	14	14	13
	3	41	41	38
	5	68	68	63

Dimensions

Unit: mm

D-M9□W

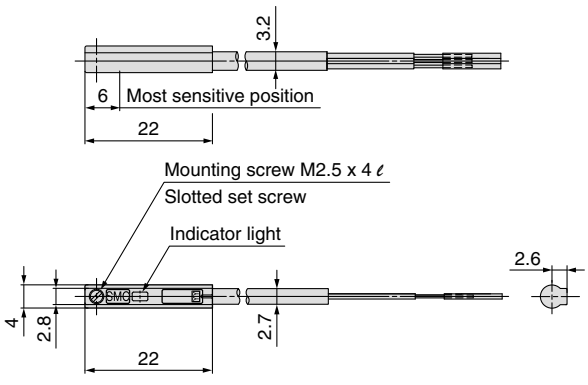

Auto Switch Internal Circuit

D-M9NW

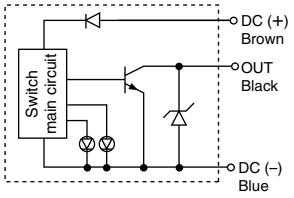

D-M9PW

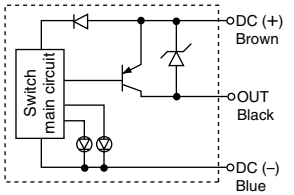

D-M9BW

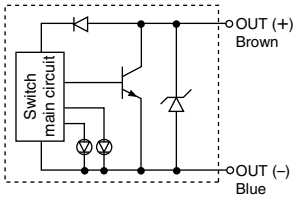

Indicator light / Display method

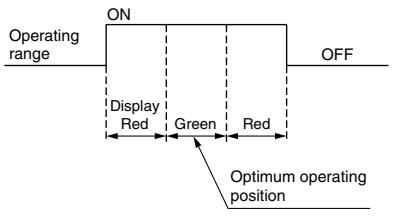

2-Colour Indication Solid State Switch: Band Mounting Style
D-G59W/D-G5PW/D-K59W

Grommet

- **The optimum operating position can be determined by the colour of the light. (Red → Green ← Red)**



Auto Switch Internal Circuit

D-G59W

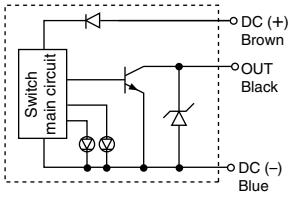

D-G5PW

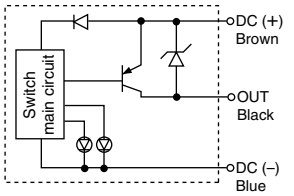

D-K59W

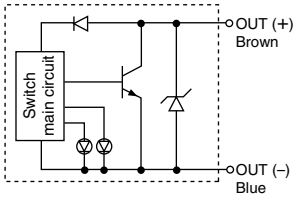

Indicator light / Display method

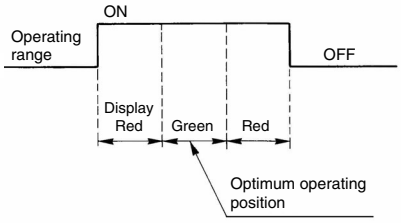

Auto Switch Specifications

PLC: Programmable Logic Controller

D-G5□W/D-K59W (With indicator light)			
Auto switch part no.	**D-G59W**	**D-G5PW**	**D-K59W**
Wiring type	3-wire		2-wire
Output type	NPN	PNP	—
Applicable load	IC circuit, Relay, PLC		24 VDC relay, PLC
Power supply voltage	5, 12, 24 VDC (4.5 to 28 V)		—
Current consumption	10 mA or less		—
Load voltage	28 VDC or less	—	24 VDC (10 to 28 VDC)
Load current	40 mA or less	80 mA or less	5 to 40 mA
Internal voltage drop	1.5 V or less (0.8 V or less at load current 10 mA)	0.8 V or less	4 V or less
Leakage current	100 μA or less at 24 VDC		0.8 mA or less at 24 VDC
Indicator light	Operating position ····· Red LED illuminates. Optimum operating position ····· Green LED illuminates.		
Standard	Conforming to CE Standards		

- Lead wires — Oilproof heavy-duty vinyl cable: ø4, 0.3 mm² x 3 cores (Brown, Black, Blue), 2 cores (Brown, Blue), 0.5 m

Note 1) Refer to page 56 for solid state switch common specifications.
Note 2) Refer to page 56 for lead wire lengths.

Weight

Unit: g

Auto switch part no.		D-G59W	D-G5PW	D-K59W
Lead wire length (m)	0.5	20	20	18
	3	78	78	68
	5	124	124	108

Dimensions

Unit: mm

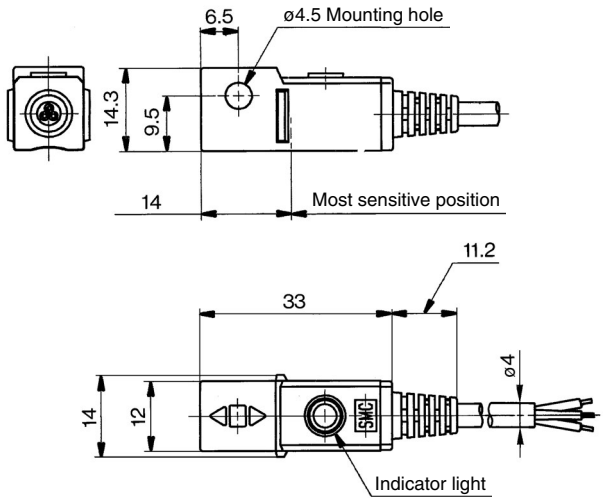

Water Resistant 2-Colour Indication Solid State Switch: Band Mounting Style
D-H7BAL

Grommet

- **Water (coolant) resistant type**
- **The optimum operating position can be determined by the colour of the light. (Red → Green → Red)**



⚠Caution

Operating Precautions

Please consult SMC if using a coolant liquid other than a water based solution.

Auto Switch Internal Circuit

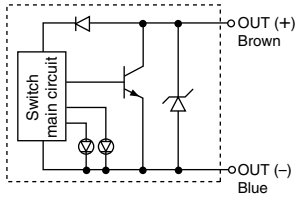

Indicator light / Display method

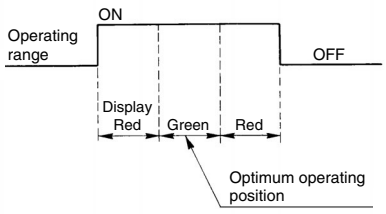

Auto Switch Specifications

PLC: Programmable Logic Controller

D-H7BAL (With indicator light)	
Auto switch part no.	**D-H7BAL**
Wiring type	2-wire
Output type	—
Applicable load	24 VDC Relay, PLC
Power supply voltage	—
Current consumption	—
Load voltage	24 VDC (10 to 28 VDC)
Load current	5 to 40 mA
Internal voltage drop	4 V or less
Leakage current	0.8 mA or less at 24 VDC
Indicator light	Operating position ····· Red LED illuminates. Optimum operating position ····· Green LED illuminates.
Standard	Conforming to CE Standards

● Lead wires — Oilproof heavy-duty vinyl cable: ø3, ø4, 0.2 mm² x 2 cores (Brown, Blue), 3 m (Standard)

Note 1) Refer to page 56 for solid state switch common specifications.

Note 2) Refer to page 56 for lead wire lengths.

Weight

Unit: g

Auto switch part no.		**D-H7BA**
Lead wire length (m)	0.5	—
	3	50
	5	81

Dimensions

Unit: mm

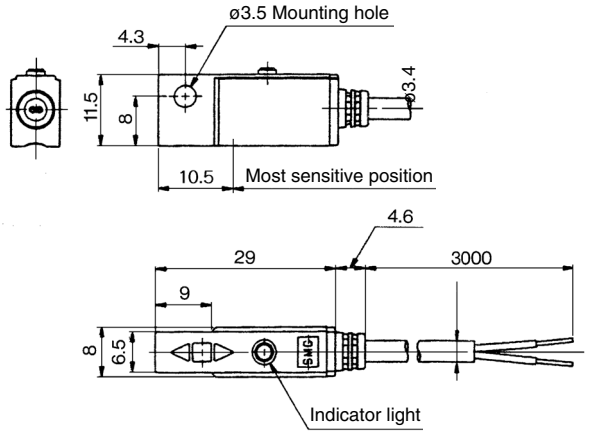

Water Resistant 2-Colour Indication Solid State Switch: Band Mounting Style
D-G5BAL

Grommet

- **Water (coolant) resistant type**
- **The optimum operating position can be determined by the colour of the light. (Red → Green → Red)**



⚠Caution

Operating Precautions

Please consult SMC if using a coolant liquid other than a water based solution.

Auto Switch Internal Circuit

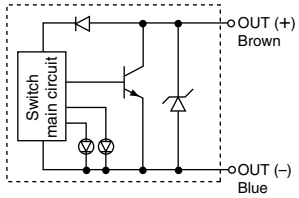

Indicator light / Display method

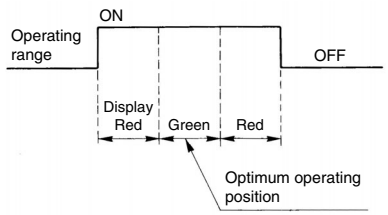

Auto Switch Specifications

PLC: Programmable Logic Controller

D-G5BAL (With indicator light)	
Auto switch part no.	**D-G5BAL**
Wiring type	2-wire
Output type	—
Applicable load	24 VDC Relay, PLC
Power supply voltage	—
Current consumption	—
Load voltage	24 VDC (10 to 28 VDC)
Load current	5 to 40 mA
Internal voltage drop	4 V or less
Leakage current	0.8 mA or less at 24 VDC
Indicator light	Operating position ····· Red LED illuminates. Optimum operating position ····· Green LED illuminates.
Standard	Conforming to CE Standards

● Lead wires — Oilproof heavy-duty vinyl cable: ø3, ø4, 0.2 mm² x 2 cores (Brown, Blue), 3 m (Standard)

Note 1) Refer to page 56 for solid state switch common specifications.

Note 2) Refer to page 56 for lead wire lengths.

Weight

Unit: g

Auto switch part no.		**D-G5BA**
Lead wire length (m)	0.5	—
	3	68
	5	108

Dimensions

Unit: mm

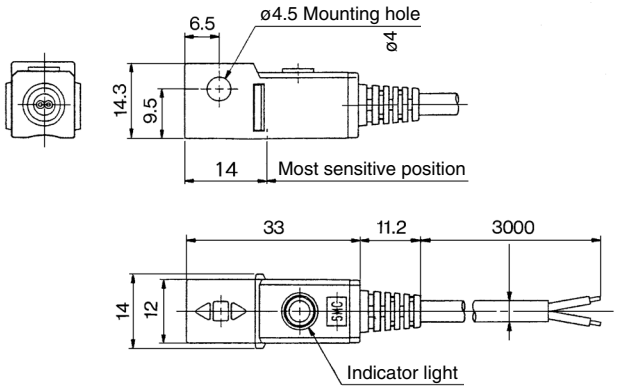

2-Colour Indication with Diagnostic Output Solid State Switch: Band Mounting Style
D-H7NF

Grommet

- **Since the output signal can be detected in an unsteady detecting area, the difference of the detecting position can be confirmed on the PLC side (Programmable Logic Controller).**
- **The optimum operating position can be determined by the colour of the light. (Red → Green → Red)**



Auto Switch Internal Circuit

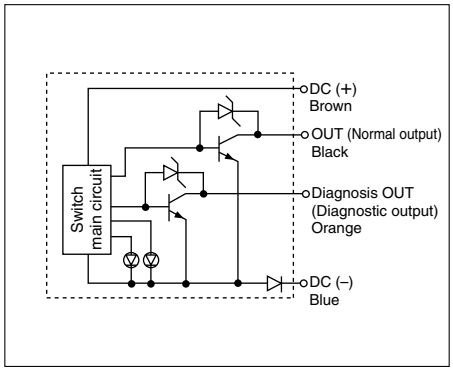

Auto Switch Specifications

PLC: Programmable Logic Controller

D-H7NF (With indicator light)	
Auto switch part no.	**D-H7NF**
Wiring type	4-wire
Output type	NPN
Diagnostic output type	Normal operation
Applicable load	IC circuit, Relay, PLC
Power supply voltage	5, 12, 24 VDC (4.5 to 28 VDC)
Current consumption	10 mA or less
Load voltage	28 VDC or less
Load current	50 mA or less at the total amount of normal output and diagnostic output
Internal voltage drop	1.5 V or less (0.8 V or less at 5 mA)
Leakage current	100 μA or less at 24 VDC
Indicator light	Operating position ····· Red LED illuminates. Optimum operating position ····· Green LED illuminates.
Standard	Conforming to CE Standards

● Lead wires — Oilproof heavy-duty vinyl cable: ø3.4, 0.2 mm^2 x 4 cores (Brown, Black, Orange, Blue), 0.5 m

Note 1) Refer to page 56 for solid state switch common specifications.

Note 2) Refer to page 56 for lead wire lengths.

Weight

Unit: g

Auto switch part no.		D-H7NF
Lead wire length (m)	0.5	13
	3	56
	5	90

Diagnostic Output Operation

The diagnostic signal is output within the unsteady detecting area (when indicator light is Red), and the diagnostic output turns OFF when the detecting position remains within the optimum operating position (when indicator light is Green). When the detecting position is not adjusted, the diagnostic output turns ON.

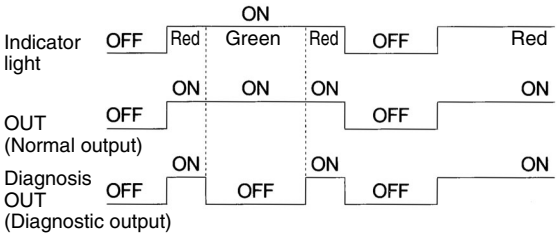

Dimensions

Unit: mm

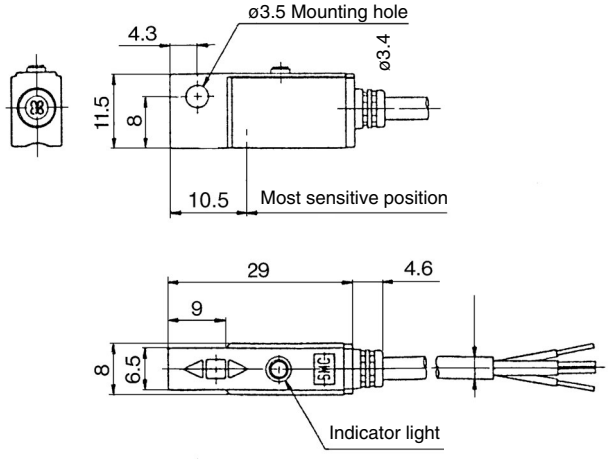

2-Colour Indication with Diagnostic Output Solid State Switch: Band Mounting Style
D-G59F

Grommet

- **Since the output signal can be detected in an unsteady detecting area, the difference of the detecting position can be confirmed on the PLC side (Programmable Logic Controller).**
- **The optimum operating position can be determined by the colour of the light. (Red → Green → Red)**



Auto Switch Internal Circuit

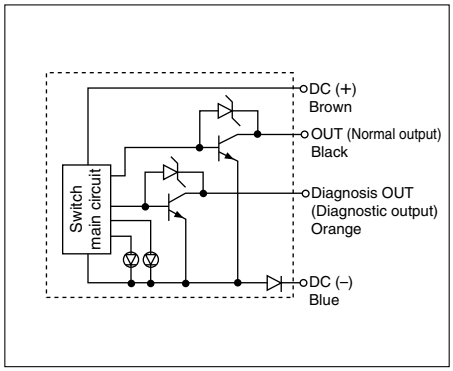

Auto Switch Specifications

PLC: Programmable Logic Controller

D-G59F (With indicator light)	
Auto switch part no.	**D-G59F**
Wiring type	4-wire
Output type	NPN
Diagnostic output type	Normal operation
Applicable load	IC circuit, Relay, PLC
Power supply voltage	5, 12, 24 VDC (4.5 to 28 VDC)
Current consumption	10 mA or less
Load voltage	28 VDC or less
Load current	50 mA or less at the total amount of normal output and diagnostic output
Internal voltage drop	1.5 V or less (0.8 V or less at 5 mA)
Leakage current	100 μA or less at 24 VDC
Indicator light	Operating position ····· Red LED illuminates. Optimum operating position ····· Green LED illuminates.
Standard	Conforming to CE Standards

● Lead wires — Oilproof heavy-duty vinyl cable: ø4, 0.2 mm² x 4 cores (Brown, Black, Orange, Blue), 0.5 m
Note 1) Refer to page 56 for solid state switch common specifications.
Note 2) Refer to page 56 for lead wire lengths.

Weight

Unit: g

Auto switch part no.		D-G59F
Lead wire length (m)	0.5	20
	3	74
	5	117

Diagnostic Output Operation

The diagnostic signal is output within the unsteady detecting area (when indicator light is Red), and the diagnostic output turns OFF when the detecting position remains within the optimum operating position (when indicator light is Green). When the detecting position is not adjusted, the diagnostic output turns ON.

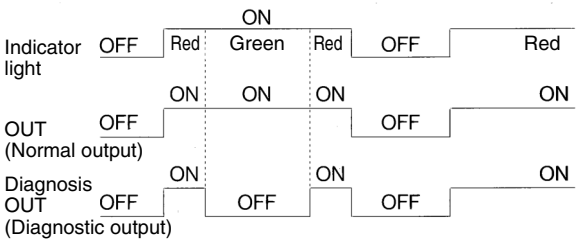

Dimensions

Unit: mm

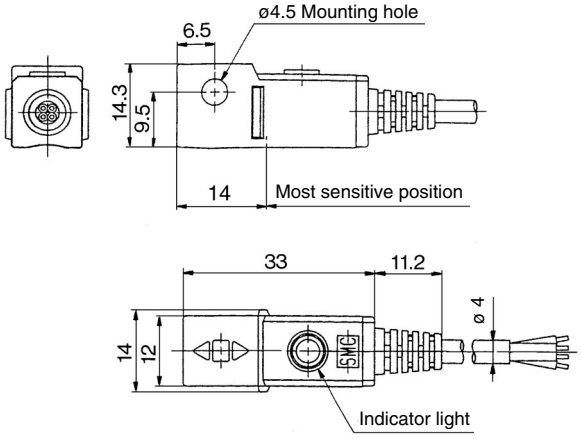

SMC

Series MGG/MGC
Made to Order Simple Specials

Please contact SMC for detailed specifications, lead times, and prices.



■ Simple Specials

The Simple Specials System is applied to the below specials.
Please contact your SMC representative for details.

Symbol	Specifications/Contents	Model		
		MGG	**MGG (End-lock)**	**MGC**
XC79	Additional machining of tapped hole, drilled hole or pinned hole	●	●	●

■ Made to Order

Symbol	Specifications/Contents	Model		
		MGG	**MGG (End-lock)**	**MGC**
XB6	Heat resistant cylinder (150°C)	●	—	●
XB13	Low speed cylinder (5 to 50 mm/s)	●	—	●
XC4	With heavy duty scraper	●	—	●
XC6□	Piston rod and rod end nut made of stainless steel	●	—	●
XC8	Adjustable stroke cylinder / Adjustable extension type	●	—	●
XC9	Adjustable stroke cylinder / Adjustable retraction type	●	—	●
XC11	Dual stroke cylinder / Single rod type	●	—	●
XC13	Auto switch rail mounting style	●	—	●
XC22	Fluoro rubber seals	●	—	●
XC35	With coil scraper	●	—	●
XC37	Larger throttle diameter of connecting port	●	—	●
XC56	With knock pin hole	●	—	●
XC71	Helical insert thread specifications	●	—	—
XC72	Without built-in auto switch magnet	●	—	—
XC73	Built-in cylinder with lock (CDNG)	●	—	●
XC74	With front plate for MGG cylinder	—	—	●
XC78	Auto switch mounting special dimensions at stroke end	—	—	●
XC83	Built-in cylinder with lock (MDNB)	●	—	—
X440	With piping part for grease	●	—	●
X772	Auto switch rail mounting style / With piping ports for grease	●	—	—

Series MGG/MGC
Simple Specials

We apply the Simple Specials System is applied to the below specials.
Please contact your SMC representative for details.

Made to Order

Symbol

Additional Machining of Tapped Hole, Drilled Hole or Pinned Hole — XC79

This simple special is meant for the additional machining of tapped hole, drilled hole or pinned hole according to customer request, on parts designed largely for mounting a workpiece, etc. on the combined air cylinders.
But, for each model, since they have portions which are impossible to machine additionally, refer to the imitation for additional machining.

Precautions

- SMC cannot take any responsibility for the strength of the additionally machined holes and the effects of the decreased strength of the product itself.
- The additionally machined parts will not be re-plated.
- Be sure to fill in 'through' for a through-hole and the effective depth for a blind hole.
- When using an additionally machined through-hole ensure that the tip of the bolt, etc. used for mounting a work piece does not stick through into the cylinder side. Otherwise this may result in an unexpected problem.
- Use caution not to interfere with the existing mounting holes on the standard product with an additionally machined hole. It is possible to additionally drill a larger hole size in the same location as an existing hole.

Explanation of the Additional Machining / The following 3 types of holes can be additionally machined.

Tapped hole
A tapped hole with a designated nominal diameter and pitch is machined. (Maximum nominal thread diameter M20.
The depth of the prepared blind hole is the sum of the dimensions A to C in Fig. 1, in contrast to the effective depth of the tapped hole. When there is a condition that does not allow a through-hole, etc., please allow suffient thickness for the lower part of the hole.

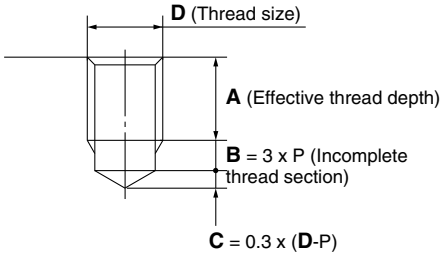

Note) P stands for thread pitch.

Drilled hole
A drilled hole with a designated internal diameter is machined. (Maximum hole diameter 20 mm). If a blind hole is required, please specify the effective depth. (Refer to Fig. 2.) Additionally the dimensional accuracy for the internal diameter will be -0.2 mm.

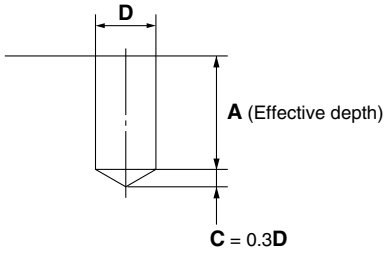

Pinned hole
A pinned hole with a designated diameter (reamed hole) is machined. (Maximum hole diameter 20 mm).
The internal dimension of the designated hole diameter has an H7 tolerance. (Refer to the table below.)

Hole dia.	3 or less	Over 3, 6 or less	Over 6, 10 or less	Over 10, 18 or less	Over 18, 20 or less
Tolerance	+0.01 0	+0.012 0	+0.015 0	+0.018 0	+0.021 0

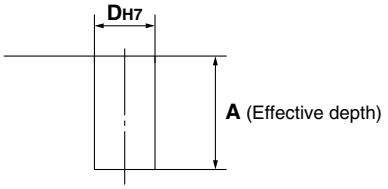

Limitation for Additional Machining / The slanted lines below denote the restricted range for additional machining. When specifying the dimensions for additional machining, please refer to the table below.

Series MGG — Front plate material: Iron

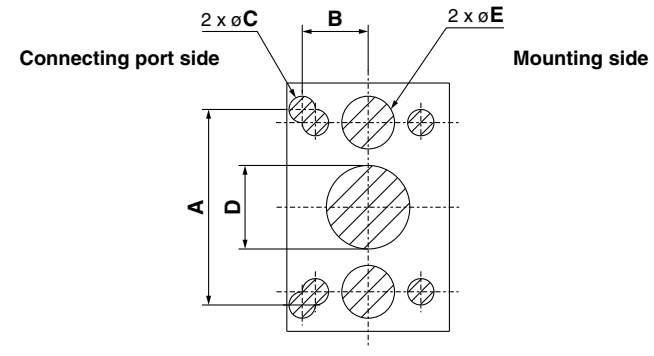

Dimensional Range Which is Not Possible to Additionally Machine (mm)

Bore size	A	B	C	D	E
20	70	17.5	9	24	12.5
25	85	20	13	31	13
32	91	23	13	31	19
40	114	29	19	36	23
50	132	34	19	44	29
63	156	38	19	44	30
80	186	44	26	58	35
100	214	49	26	64	40

Series MGC — Front plate material: Iron

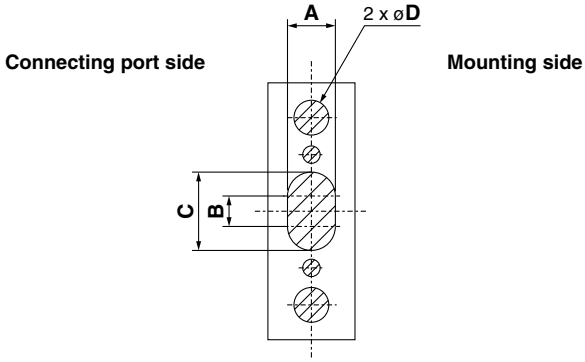

Dimensional Range Which is Not Possible to Additionally Machine (mm)

Bore size	A	B	C	D
20	19	10	28	12
25	24	13	36	13
32	24	13	36	16
40	30	15	42	20
50	36	19	52	25

Series MGG/MGC
Made to Order 1

Please contact SMC for detailed specifications, lead times, and prices.

Made to Order

1 Heat Resistant Cylinder (–10 to 150°C)

Symbol: XB6

Air cylinder in which the seal material and grease are changed, so that it can be used at even higher temperature up to 150°C from –10°C.

How to Order

MGG / MGC — Standard model no. — XB6

XB6: Heat resistant cylinder

⚠Warning

Precautions

Be aware that smoking cigarettes, etc. after your hands have come into contact with the grease used in this cylinder can create a gas that is hazardous to humans.

Specifications

Ambient temperature range	–10 to 150°C
Seals material	Fluoro rubber
Grease	Heat resistant grease
Specifications other than above and external dimensions	Same as standard type.

Note 1) Operate without lubrication from a pneumatic system lubricator.
Note 2) Please contact SMC for details on the maintenance intervals for this cylinder, which differs from those of the standard cylinder.
Note 3) It is impossible to make built-in magnet type and the one with auto switch. (Please contact SMC for the availability with auto switch.)
Note 4) Piston speed range is from 50 to 500 mm/s.
Note 5) No shock absorber and rubber bumper are equipped for the MGG series.

2 Low Speed Cylinder

Symbol: XB13

Even if driving at lower speeds from 5 to 50 mm/s, there will be no stick-slip phenomenon and it can run smoothly.

How to Order

MGGM — Mounting — Bore size — Port thread — Stroke — Auto switch — XB13

MGCM — Mounting — Bore size — Port thread — Stroke — With/Without rear plate — Auto switch — XB13

M: Slide bearing

XB13: Low speed cylinder

Specifications

Piston speed	5 to 50 mm/s
Specifications other than above and external dimensions	Same as standard type.

Note 1) Operate without lubrication from a pneumatic system lubricator.
Note 2) For speed adjustment, use speed controllers for controlling at lower speeds. (Series AS-FM/AS-M)
Note 3) No shock absorber is equipped for the MGG series.
Note 4) Rubber bumper is equipped for the MGC series.

3 With Heavy Duty Scraper

Symbol: XC4

It is suitable for using cylinders in an environment, where there is much dust in a the surrounding area by using a heavy duty scraper on the wiper ring, or using cylinders under earth and sand exposed to the die-casted equipment, construction machinery, or industrial vehicles.

How to Order

MGG / MGC — Standard model no. — XC4

XC4: With heavy duty scraper (SCB scraper)

Specifications: Same as standard type.

Note 1) Except ø20, ø25.
Note 2) A heavy duty scraper is installed on the piston rod and guide rod (front, rear).
Note 3) The rod-side heavy duty scraper for ø32–ø50 is press fit into the large/small flange, so when replacing this part, please replace the large/small flange assembly.

Dimensions (Dimensions other than below are the same as standard type.)

Series MGG□B
ø32 to ø50

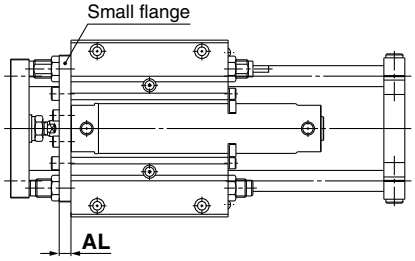

(mm)

Bore size (mm)	AL
32	9
40	12
50	12

Series MGG/MGC
Made to Order 2

Please contact SMC for detailed specifications, lead times, and prices.

Made to Order

4 Piston Rod and Rod End Nut Made of Stainless Steel

Symbol: **XC6**

Suitable for cases where it is likely to generate rust by being immersed in the water and corroding.

Series MGG
How to Order

MGG [Standard model no.] **–XC6** [ ]

Made of stainless steel ●

Suffix ●

-	Piston rod, Rod end nut made of stainless steel
A	Stainless steel used on all standard iron parts
B	Stainless steel rod end moving parts
C	Stainless steel rod parts

Stainless Steel Modified Parts

Symbol	Bore size (mm)	Parts no.	Note
-XC6	20, 25, 32, 40, 50	④⑪	
	63, 80, 100	④⑩	
-XC6A	20, 25, 32, 40, 50	④⑪⑯⑰⑱⑲⑳㉑㉒㉓㉖㉙㉚㉛㉝㉞㉟㊱㊲	⑲ is type L only.
	63, 80, 100	④⑩⑮⑯⑰⑱⑲⑳㉑㉓㉔㉗㉘㉙㉛㉜㉝㉞㉟㊴㊵	⑰ is type L only, ㉛ is type B only, ㊴ and ㊵ are type F only.
-XC6B	20, 25, 32, 40, 50	④⑪⑰⑳㉑㉒㉓㉛㉟	㉛ is rod side only.
	63, 80, 100	④⑩⑮⑱⑲⑳㉑㉙㉝	㉙ is rod side only.
-XC6C	20, 25, 32, 40, 50	④⑪⑳	
	63, 80, 100	④⑩⑱	

∗ For parts number, refer to the construction of standard type (page 17 through to 19 and page 27).
∗ Specifications other than above are the same as standard type.
Note) The RBL (coolant resistant) type shock absorbers are used (-XC6A only).

Dimensions (Dimensions other than below are the same as standard type.)

MGG□B20 & 50-□-XC6A

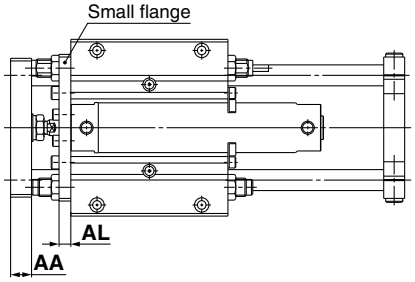

(mm)

Bore size (mm)	AA	AL
20	12	9
25	16	9
32	16	9
40	19	12
50	25	12

MGG□B20 & 50-□-XC6B
MGG□B20 & 50-□-XC6C

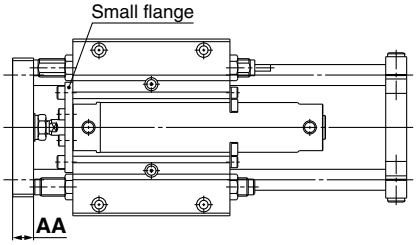

(mm)

Bore size (mm)	AA
20	12
25	16
32	16
40	19
50	25

MGG□F20 & 50-□-XC6A
MGG□F20 & 50-□-XC6B
MGG□F20 & 50-□-XC6C

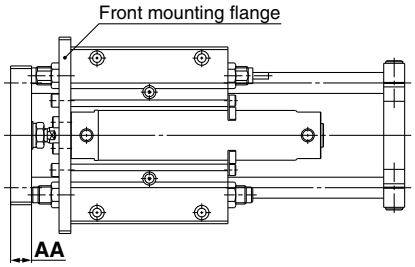

(mm)

Bore size (mm)	AA
20	12
25	16
32	16
40	19
50	25

Series MGC
How to Order

MGC [Bearing] [Mounting] [Bore size] **–** [Stroke] **–** [With/Without rear plate] **–** [Auto switch] **–XC6** [ ]

Made of stainless steel ●

Suffix ●

-	Piston rod, Rod end nut made of stainless steel
A	Stainless steel used on all standard iron parts
B	Stainless steel rod end moving parts
C	Stainless steel rod parts

Stainless Steel Modified Parts

Symbol	Bore size (mm)	Parts no.	Note
-XC6	20, 25, 32, 40, 50	④⑭	
-XC6A	20, 25, 32, 40, 50	④⑩⑪⑫⑭㉓㉔㉕㉖㉗㉘㉙㉚㉝㉟㊱㊲㊳㊴㊵	㉖ is type L only.
-XC6B	20, 25, 32, 40, 50	④⑩⑪⑫⑭㉔㉗㉘㉙㉚㊳	
-XC6C	20, 25, 32, 40, 50	④⑩⑪⑫⑭㉗	

∗ For parts number, refer to the construction of standard type (page 49).
∗ Specifications and external dimensions other than above are the same as standard type.

SMC

Made to Order 3

Please contact SMC for detailed specifications, lead times, and prices.

Made to Order

Symbol

5 Adjustable Stroke Cylinder / Adjustable Extension Type — XC8

Possible to adjust the extending stroke by the stroke adjustable mechanism equipped in the head side. (After the stroke is adjusted, with bothside cushion style is changed to single-side cushion style.)

How to Order

MGG | Bearing | Mounting | Bore size | Port thread | — | Stroke | Stroke adjustment symbol | — | Auto switch | — | XC8

MGC | Bearing | Mounting | Bore size | Port thread | — | Stroke | Stroke adjustment symbol | — | With/Without rear plate | — | Auto switch | — | XC8

Adjustable stroke cylinder / Adjustable extension type

Specifications

Applicable series	Stroke adjustment symbol	Stroke adjustment range (mm)
MGG	A	0 to 25
MGC	B	0 to 50

Note) Specifications other than above are the same as standard type of each series.

⚠Warning

Precautions

1. When the cylinder is operating, if something gets caught between the stopper bracket for adjusting the stroke and the cylinder body, it could injure personnel or damage the peripheral equipment. Therefore, take preventive measures as necessary, such as installing a protective cover.
2. To adjust the stroke, make sure to secure the wrench flats of the stopper bracket before loosening the nut. If the nut is loosened without securing the stopper bracket, be aware that the area that joins the load to the piston rod or the area in which the piston rod is joined with the load side and the stopper bracket side could loosen first.

JIS Symbol

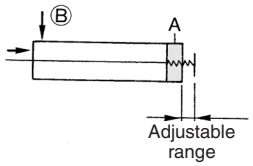

Dimensions (Dimensions other than below are the same as standard type.)

Series MGG
ø20 to ø50

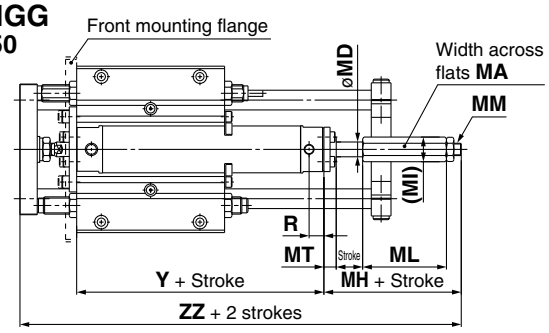

ø63

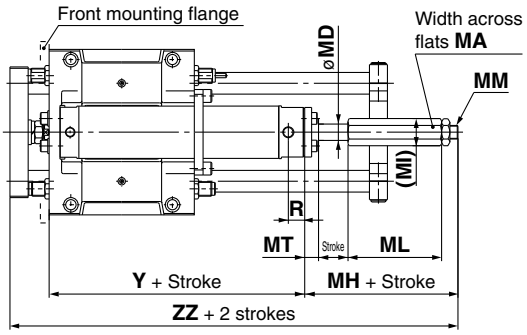

Series MGG (mm)

Bore size (mm)	R	Y	MA	MD	MI	MM	MT
20	12	77	14	8	16.2	M8	9
25	12	77	17	10	19.7	M10 x 1.25	11
32	12	79	17	12	19.7	M10 x 1.25	11
40	13	87	24	16	27.8	M14 x 1.5	11
50	14	102	32	20	37	M18 x 1.5	11
63	14	117	32	20	37	M18 x 1.5	13

Bore size (mm)	Adjustment 0 to 25 mm			Adjustment 0 to 50 mm		
	MH	ML	ZZ	MH	ML	ZZ
20	63	43	179	88	68	204
25	66	43	189	91	68	214
32	66	43	191	91	68	216
40	72	47	215	97	72	240
50	85	53	254	110	78	279
63	85	53	256	110	78	281

∗ Piston speed of the extension side is 50 to 500 mm/s.

Series MGC
ø20 to ø50

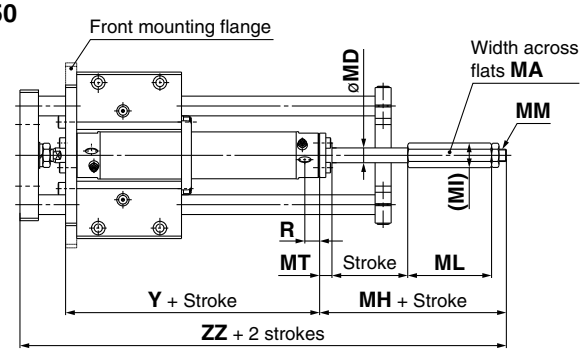

Series MGC (mm)

Bore size (mm)	R	Y	MA	MD	MI	MM	MT
20	12	86	14	8	16.2	M8	9
25	12	86	17	10	19.7	M10 x 1.25	11
32	12	88	17	12	19.7	M10 x 1.25	11
40	13	99	24	16	27.8	M14 x 1.5	11
50	14	114	32	20	37	M18 x 1.5	11

Bore size (mm)	Adjustment 0 to 25 mm			Adjustment 0 to 50 mm		
	MH	ML	ZZ	MH	ML	ZZ
20	63	43	179	88	68	204
25	66	43	189	91	68	214
32	66	43	191	91	68	216
40	72	47	215	97	72	240
50	85	53	254	110	78	279

∗ Piston speed of the extension side is 50 to 500 mm/s.

Series MGG/MGC
Made to Order 4

Please contact SMC for detailed specifications, lead times, and prices.

Made to Order

6 Adjustable Stroke Cylinder / Adjustable Retraction Type

Symbol **XC9**

The retract stroke of the cylinder can be adjusted by the adjusting bolt. (After the stroke is adjusted, both-side cushion style is changed into single-side cushion style.)

How to Order

MGG | Bearing | Mounting | Bore size | Port thread | — | Stroke | Stroke adjustment symbol | — | Auto switch | — | XC9

MGC | Bearing | Mounting | Bore size | Port thread | — | Stroke | Stroke adjustment symbol | — | With/Without rear plate | — | Auto switch | — | XC9

Adjustable stroke cylinder / Adjustable retraction type

Specifications

Applicable series	Stroke adjustment symbol	Stroke adjustment range (mm)
MGG MGC	A	0 to 25
	B	0 to 50

Note) Specifications other than above are the same as standard type of each series.

⚠Warning

Precautions

1. When air is supplied to the cylinder, if the stroke adjusting bolt is loosened in excess of the allowable stroke adjustment amount, be aware that the stroke adjusting bolt could fly out or air could be discharged, which could injure personnel or damage the peripheral equipment.
2. Adjust the stroke when the cylinder is not pressurised.
   If it is adjusted in the pressurised state, the seal of he adjustment section could become deformed, leading to air leakage.

JIS Symbol

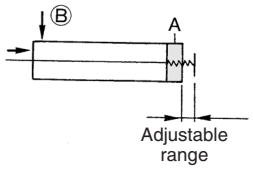

Dimensions (Dimensions other than below are the same as standard type.)

Series MGG
ø20 to ø50

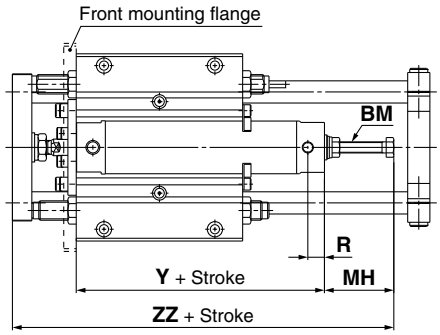

ø63

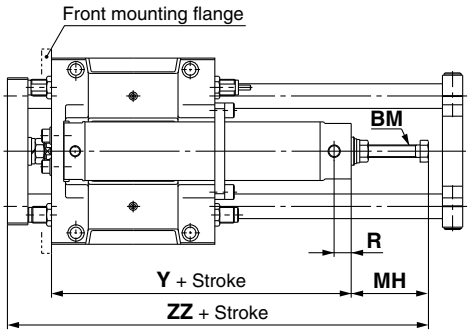

Series MGG (mm)

Bore size (mm)	R	Y	BM	Adjustment 0 to 25 mm		Adjustment 0 to 50 mm	
				MH	ZZ	MH	ZZ
20	12	77	M6	48	164	73	189
25	12	77	M6	48	171	73	196
32	12	79	M8	50	175	75	200
40	13	87	M12	65	208	90	233
50	14	102	M12	58	227	83	252
63	14	117	M16	65	236	90	261

∗ Piston speed of the retraction side is 50 to 500 mm/s.

Series MGC
ø20 to ø50

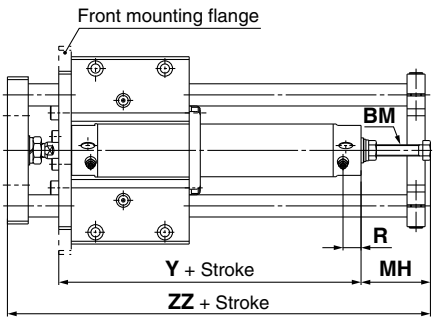

Series MGC (mm)

Bore size (mm)	R	Y	BM	Adjustment 0 to 25 mm		Adjustment 0 to 50 mm	
				MH	ZZ	MH	ZZ
20	12	86	M6	46	162	71	187
25	12	86	M6	46	169	71	194
32	12	88	M8	50	175	75	200
40	13	99	M12	64	207	89	232
50	14	114	M12	62	231	87	256

∗ Piston speed of the retraction side is 50 to 500 mm/s.

SMC

Series MGG/MGC
Made to Order 5

Please contact SMC for detailed specifications, lead times, and prices.

Made to Order

7 Dual Stroke Cylinder / Single Rod Type

Symbol **XC11**

Two cylinders can be integrated by connecting them in line, and the cylinder stroke can be controlled in two stages in both directions.

How to Order

MGG | Bearing | Mounting | Bore size | − | Stroke A | + | Stroke B-A | − | Auto switch | − XC11

MGC | Bearing | Mounting | Bore size | − | Stroke A | + | Stroke B-A | − | With/Without rear plate | − | Auto switch | − XC11

Specifications: Same as standard type.

Dual stroke cylinder / Single rod type

JIS Symbol

Function

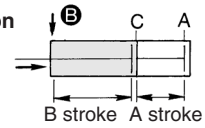

When air pressure is supplied to port (B), both A and B strokes retract.

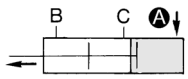

When air pressure is supplied to port (A), the rod extends by the A stroke length.

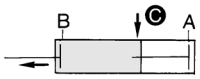

When air pressure is supplied to port (C), the rod extends by the B stroke length.

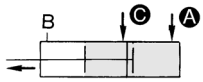

When air pressure is supplied to both ports (A) and (C), the rod extends by double the output force over the A stroke length.

⚠Warning

Precautions

1. Do not supply air until the cylinder is fixed.
2. If air is supplied without securing the cylinder, the cylinder could lurch, posing the risk of injury to personnel or damage to the peripheral equipment.

Dimensions (Dimensions other than below are the same as standard type.)

Series MGG
ø20 to ø50

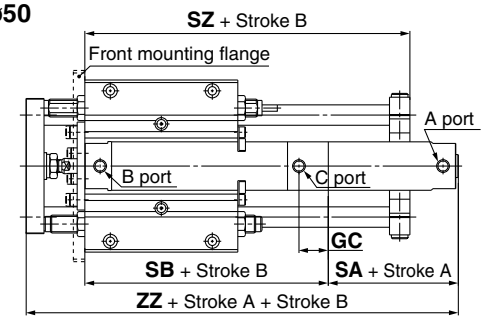

ø63

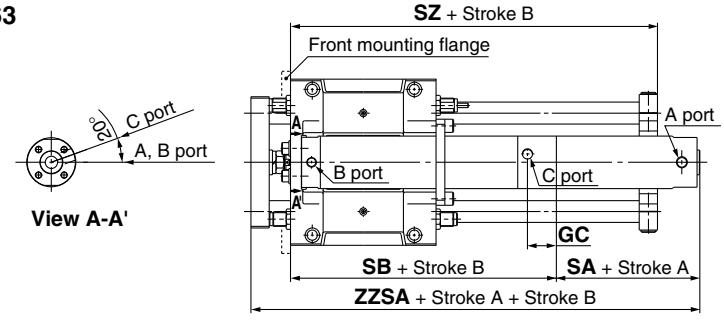

Series MGG (mm)

Bore size (mm)	GC	SA	SB	SZ	ZZ	Bracket mounting stroke (Stroke A + Stroke B)	Stroke A availability
20	21	50	87	118	176	35 st or more	Up to 200
25	21	50	87	129	183	60 st or more	Up to 300
32	23	52	91	155	189	80 st or more	
40	24	59	99	182	214	125 st or more	
50	28	66	107	218	250	160 st or more	
63	28	66	132	254	252	210 st or more	

∗ Piston speed of the retraction side of the B stroke is 50 to 500 mm/s.

Series MGC
ø20 to ø50

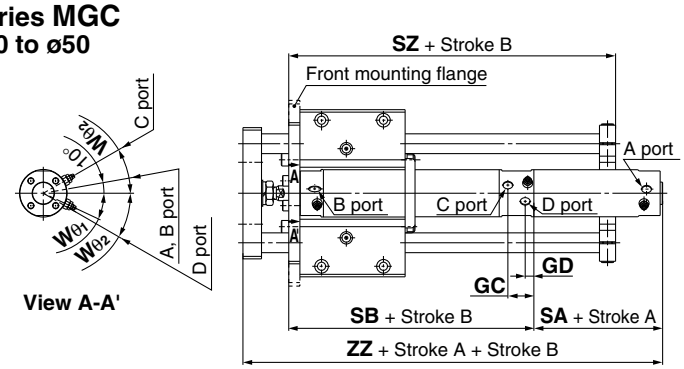

Series MGC (mm)

Bore size (mm)	GC	GD	SA	SB	Wθ1	Wθ2
20	21	9	50	96	30°	30°
25	21	9	50	96	30°	30°
32	23	9	52	100	25°	30°
40	24	8	59	111	20°	20°
50	28	12	66	129	20°	20°

Bore size (mm)	SZ: With R	SZ: Without R	ZZ	Bracket mounting stroke (Stroke A + Stroke B)	Stroke A availability
20	110	89	176	35 st or more	Up to 200
25	116	94	183	60 st or more	Up to 300
32	124	99	189	80 st or more	
40	144	112	214	125 st or more	
50	186	147	250	160 st or more	

∗ Piston speed of the retraction side of the B stroke is 50 to 500 mm/s.

Series MGG/MGC
Made to Order 6

Please contact SMC for detailed specifications, lead times, and prices.

Made to Order

8 Auto Switch Rail Mounting Style

Symbol
XC13

A cylinder on which a rail is mounted to enable auto switches, in addition to the standard method (Band mounting style), to be mounted.

How to Order

MGG | Bearing | Mounting | Bore size | – | Stroke | – | Auto switch | – **XC13**

MGC | Bearing | Mounting | Bore size | – | Stroke | – | With/Without rear plate | – | Auto switch | – **XC13**

Specifications: Same as standard type.

Auto switch rail mounting style

Dimensions (Dimensions other than below are the same as standard type.)

Series MGG
ø20 to ø50

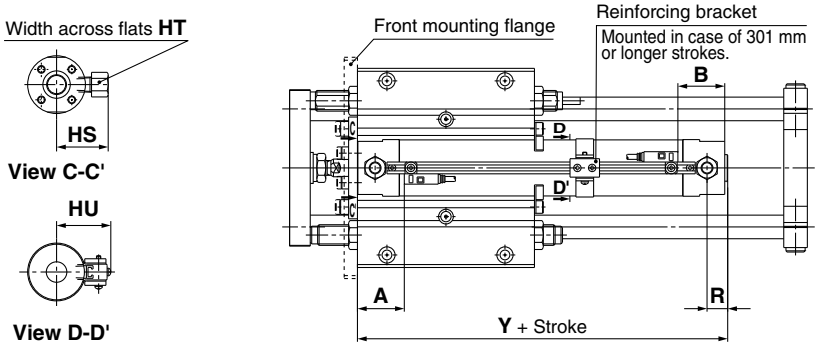

Series MGG (mm)

Bore size (mm)	R	Y	HS	HT	HU
20	14	99	28.5	14	30.7
25	14	99	31	14	33.2
32	14	101	34.5	14	36.5
40	15	109	39	14	41
50	16	124	49.5	17	46.2
63	16	139	56.5	17	53.2
80	23	165	75.5	23	62.2
100	23	165	86	26	72.7

ø63 to ø100

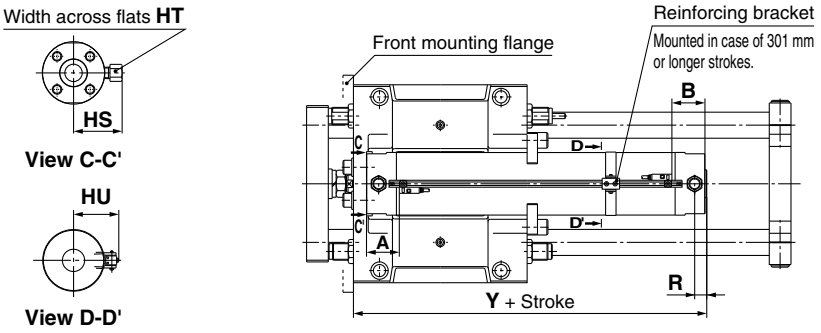

Series MGC
ø20 to ø50

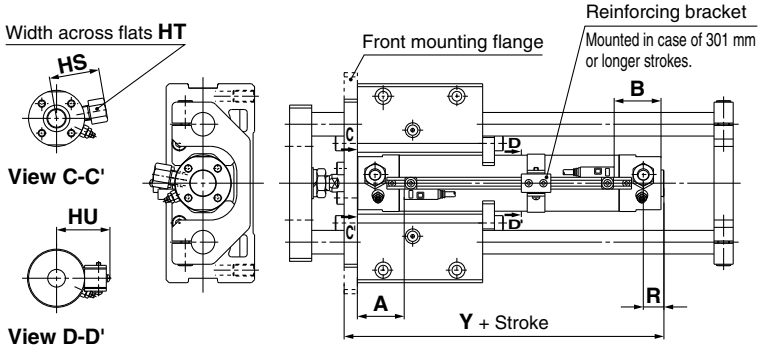

Series MGC (mm)

Bore size (mm)	R	Y	HS	HT	HU
20	14	108	26	7	30.7
25	14	108	28.5	7	33.2
32	14	110	34.5	14	36.5
40	15	121	39	14	41
50	16	136	49.5	17	46.2

Auto Switch Mounting Position (mm)

Auto switch model / Applicable bore size	D-A72/A7□H/A80H D-A73C/A80C D-F7□/F7□V/F7□W D-F7□WV/F7BAL D-J7□/F79F/F7BAVL		D-A73 D-A80		D-A79W		D-F7NTL	
	A	B	A	B	A	B	A	B
20	40.5	39.5	40	39	37.5	36.5	45.5	44.5
25	40.5	39.5	40	39	37.5	36.5	45.5	44.5
32	41.5	40.5	41	40	38.5	37.5	46.5	45.5
40	46.5	43.5	46	43	43.5	40.5	51.5	48.5
50	53.5	51.5	53	51	50.5	48.5	58.5	56.5
63	53.5	51.5	53	51	50.5	48.5	58.5	56.5
80	63.5	51.5	63	51	60.5	48.5	68.5	56.5
100	63.5	51.5	63	51	60.5	48.5	68.5	56.5

Auto Switch Mounting Height (mm)

Auto switch model / Applicable bore size	D-A7□ D-A80	D-A7□H/J79W D-A80H/F7BAL D-F7□/F79F D-J79/F7NTL D-F7□W	D-A73C D-A80C	D-F7□V D-F7□WV D-F7BAVL	D-J79C	D-A79W
	Hs	Hs	Hs	Hs	Hs	Hs
20	26.5	26.5	32.5	29	31	30
25	29	29	35	31.5	33.5	32.5
32	32	32.5	38.5	34.5	36.5	35.5
40	36.5	37	43	39	41	40
50	42	42	48	44.5	46.5	45.5
63	49	49	55	51.5	53.5	52.5
80	58	58	64	60.5	62.5	61.5
100	68.5	69	74.5	71	73	72

Note) When setting an auto switch, confirm the operation and adjust its mounting position.

Please contact SMC for detailed specifications, lead times, and prices.

Made to Order

9 Fluoro Rubber Seals

Symbol: **XC22**

How to Order

MGG / MGC — Standard model no. — **XC22**

XC22: Fluoro rubber seals

Specifications

Seal material	Fluoro rubber
Specifications other than above and external dimensions	Same as standard type.

Note 1) Please confirm with SMC, as the type of chemical and the operating temperature may not allow the use of this product.
Note 2) Auto switch related parts (auto switch units, mounting bracket, built-in magnets) are the same as standard products. Before using these, please contact SMC regarding their suitability for the operating environment.
Note 3) The MGG series is using a shock absorber RBL type.
Note 4) No rubber bumper is equipped for the MGG series.

10 With Coil Scraper

Symbol: **XC35**

It removes frost, ice, weld spatter, cutting chips adhered to the piston rod, and protects the seals, etc.

How to Order

MGG / MGC — Standard model no. — **XC35**

XC35: With coil scraper

Specifications: Same as standard type.

Note 1) Except ø20, ø25.
Note 2) Coil scraper is installed on the piston rod and guide rods (front, rear).

Dimensions (Dimensions other than below are the same as standard type.)

Series MGG□B
ø32 to ø50

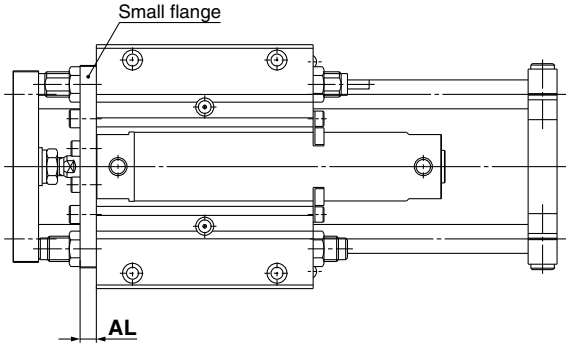

(mm)

Bore size (mm)	AL
32	9
40	12
50	12

11 Larger Throttle Diameter of Connection Port

Symbol: **XC37**

This is a cylinder with a piping port larger than the standard type.

How to Order

MGG — Bearing — Mounting — Bore size — Stroke — Auto switch — **XC37**

MGC — Bearing — Mounting — Bore size — Stroke — With/Without rear plate — Auto switch — **XC37**

XC37: Larger throttle diameter of connection port

Specifications: Same as standard type.

Dimensions (Dimensions other than below are the same as standard type.)

Series MGG (mm)

Bore size (mm)	Throttle dia. (ø)
20	5
25	5
32	6
40	7
50	9
63	9

Series MGC (mm)

Bore size (mm)	Throttle dia. (ø)
20	3
25	3.5
32	6
40	7
50	9

Series MGG/MGC
Made to Order 8

Please contact SMC for detailed specifications, lead times, and prices.

Made to Order

12 With Knock Pin Hole

Symbol **XC56**

Cylinder with knock positioning pin hole.

How to Order

MGG [Bearing] [B] [Bore size] [Port thread] – [Stroke] – [Auto switch] – XC56

MGC [Bearing] [B] [Bore size] [Port thread] – [Stroke] – [With/Without rear plate] – [Auto switch] – XC56

B: Basic

XC56: With knock pin hole

Specifications: Same as standard type.

Dimensions (Dimensions other than below are the same as standard type.)

Series MGG
ø20 to ø50

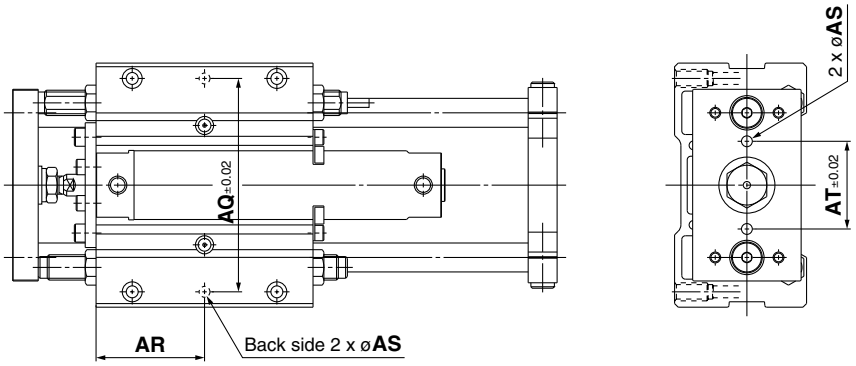

Series MGG (mm)

Bore size (mm)	AQ	AR	AS	AT
20	92	45	$5^{H7}{}^{+0.012}_{0}$ depth 6	36
25	113	50	$6^{H7}{}^{+0.012}_{0}$ depth 8	45
32	118	60	$6^{H7}{}^{+0.012}_{0}$ depth 8	48
40	150	70	$8^{H7}{}^{+0.015}_{0}$ depth 11	56
50	170	85	$10^{H7}{}^{+0.015}_{0}$ depth 13	68
63	200	100	$10^{H7}{}^{+0.015}_{0}$ depth 13	74
80	234	115	$12^{H7}{}^{+0.018}_{0}$ depth 15	92
100	274	140	$12^{H7}{}^{+0.018}_{0}$ depth 15	106

ø63 to ø100

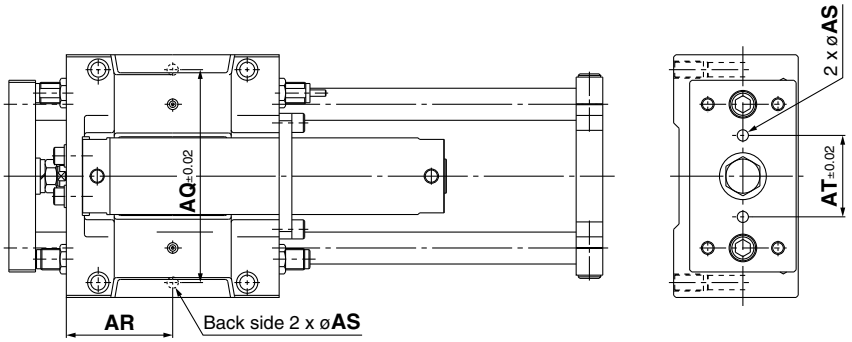

Series MGC
ø20 to ø50

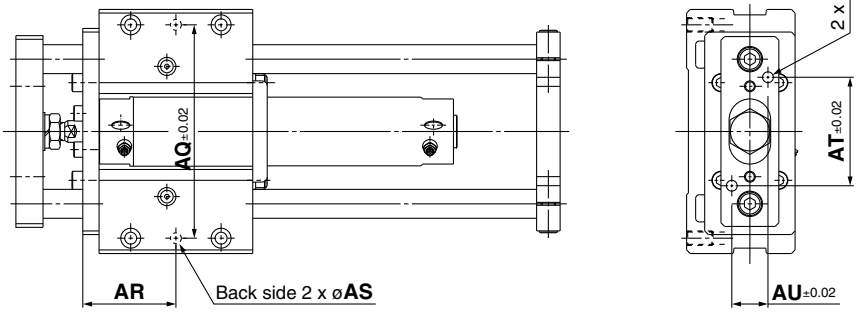

Series MGC (mm)

Bore size (mm)	AQ	AR	AS	AT	AU
20	90	46.5	$5^{H7}{}^{+0.012}_{0}$ depth 6	45	15
25	103	49	$6^{H7}{}^{+0.012}_{0}$ depth 8	55	20
32	118	51.5	$6^{H7}{}^{+0.012}_{0}$ depth 8	60	20
40	140	59.5	$8^{H7}{}^{+0.015}_{0}$ depth 11	70	22
50	170	77	$8^{H7}{}^{+0.015}_{0}$ depth 11	85	30

Made to Order 9

Please contact SMC for detailed specifications, lead times, and prices.

Made to Order

13 Helical Insert Thread Specifications

Symbol **XC71**

The guide body mounting threads are helical insert threads.

How to Order

MGG [Bearing] **B** [Bore size] [Port thread] – [Stroke] – [Auto switch] – **XC71**

B: Basic

XC71: Helical insert thread specifications

Specifications

Series	MGG□B
Bore size (mm)	20, 25, 32, 40, 50
Mounting	Basic

∗ Specifications other than above are the same as standard type.

Dimensions (Dimensions other than below are the same as standard type.)

ø20 to ø50

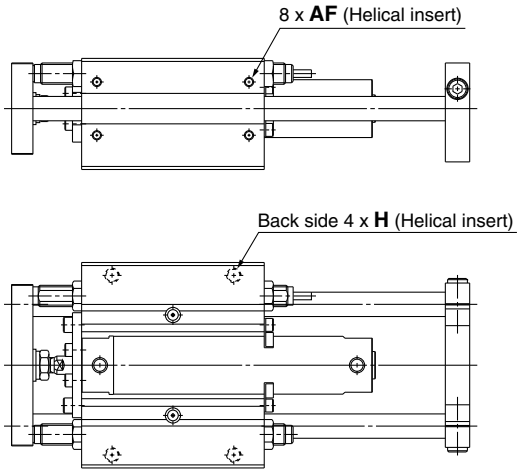

(mm)

Bore size (mm)	H	AF
20	M6 depth 12	M5 depth 7.5
25	M8 depth 16	M6 depth 9
32	M8 depth 16	M6 depth 9
40	M10 depth 20	M8 depth 12
50	M12 depth 24	M10 depth 15

14 Without Built-in Auto Switch Magnet

Symbol **XC72**

This cylinder type does not have built-in auto switch magnet.

How to Order

MGG [Standard model no.] – **XC72**

XC72: Without built-in auto switch magnet

Specifications

Series	MGG
Bore size (mm)	20, 25, 32, 40, 50
Auto switch	Not mountable

∗ Specifications and external dimensions other than above are the same as standard type.

Series MGG/MGC
Made to Order 10

Please contact SMC for detailed specifications, lead times, and prices.

Made to Order

15 Built-in Cylinder with Lock (CDNG)

Symbol
XC73

This type has a built-in cylinder with lock, which accommodates intermediate stops, emergency stops and drop prevention, etc.

How to Order

MGG [Bearing] [Mounting] [Bore size] – [Stroke] – [Auto switch] – **XC73**

XC73: Built-in cylinder with lock

Specifications

Series		MGG			
Bore size (mm)		20	25	32	40
Basic cylinder		CDNGBN	Bore size	– Stroke – D –	Auto switch
Minimum operating pressure		0.2 MPa (Horizontal with no load)			
Piston speed		50 to 1000 mm/s Note)			
Stroke adjustment range (One side) [Built-in adjusting bolts (2 pcs.)]		0 to –15 mm			
Non-rotating accuracy *2	Slide bearing	±0.06°	±0.05°		±0.04°
	Ball bushing bearing	±0.04°	±0.04°		±0.04°
Shock absorber model		RB1412	RB2015		

Note) When the piston is locked, the load weight is limited by the mounting orientation and the operating pressure. For lock specifications, etc., refer to the CNG series in SMC's "Best Pneumatics" catalogue.

*1 Specifications other than these shown, on the left are the same as standard type.

*2 When the cylinder is retracted (initial value), with no load or without deflection of the guide rod, the non-rotating accuracy shall be the value in the table or less.

Dimensions

Basic / MGG□B
ø20 to ø40

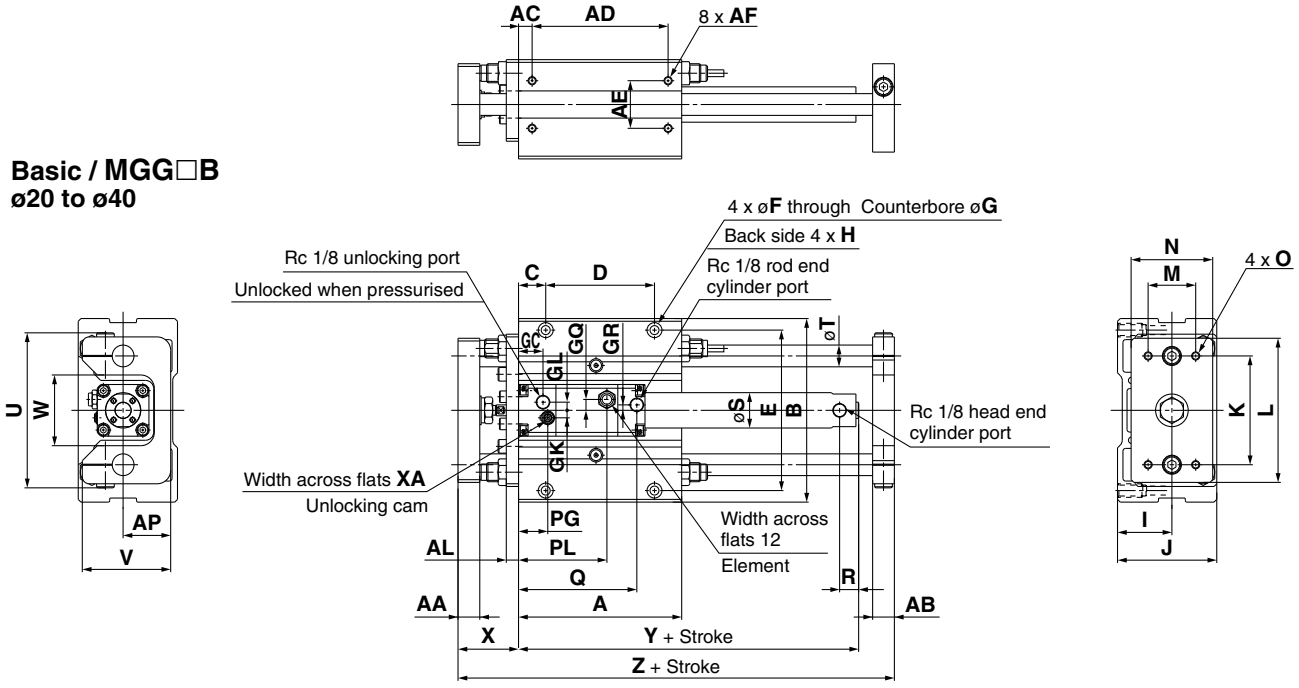

Standard Stroke

(mm)

Bore size (mm)	Stroke range (mm)	A	AA	AB	AC	AD	AE	AF	AL	AP	B	C	D	E	F	G	GC	GK	GL	GQ	GR	H	I	J
20	75, 100, 125, 150, 200	120	12	16	10	100	35	M6 depth 12	9	35	135	20	80	118	6.6	11 depth 8	18	5.5	6	8	4	M10 depth 18	40	73
25	75, 100, 125 150, 200 250, 300	140	16	19	10	120	40	M8 depth 16	9	45	170	20	100	150	9	14 depth 10	25	6.5	9	10	7	M12 depth 21	50	93
32		140	16	19	10	120	40	M8 depth 16	9	45	170	20	100	150	9	14 depth 10	25	6.5	9	10	7	M12 depth 21	50	93
40		170	19	21	10	150	45	M10 depth 20	12	50	194	25	120	170	11	17 depth 12	26	7	11	12	7	M14 depth 25	55	103

Bore size (mm)	K	L	M	N	O	PG	PL	Q	R	S	T	U	V	W	X	XA	Y	Z
20	80	106	35	60	M6 depth 9	21.5	65	85	12	26	16	114	65	52	39	3	143	194
25	95	134	50	75	M8 depth 13	26.5	73	96	12	31	20	138	84	62	46	3	153	228
32	95	134	50	75	M8 depth 13	26.5	73	97	12	38	20	138	84	62	46	3	156	228
40	115	152	56	90	M10 depth 16	28	81	104	12	47	25	164	94	75	56	4	171	274

Long Stroke

Bore size (mm)	Stroke range (mm)	R	Y
20	250 to 400	14	151
25	350 to 500	14	161
32	350 to 600	14	164
40	350 to 800	15	180

SMC

Made to Order

Symbol
XC73

15 Built-in Cylinder with Lock (CDNG)

Dimensions

Front mounting flange: MGG□F
ø20 to ø40

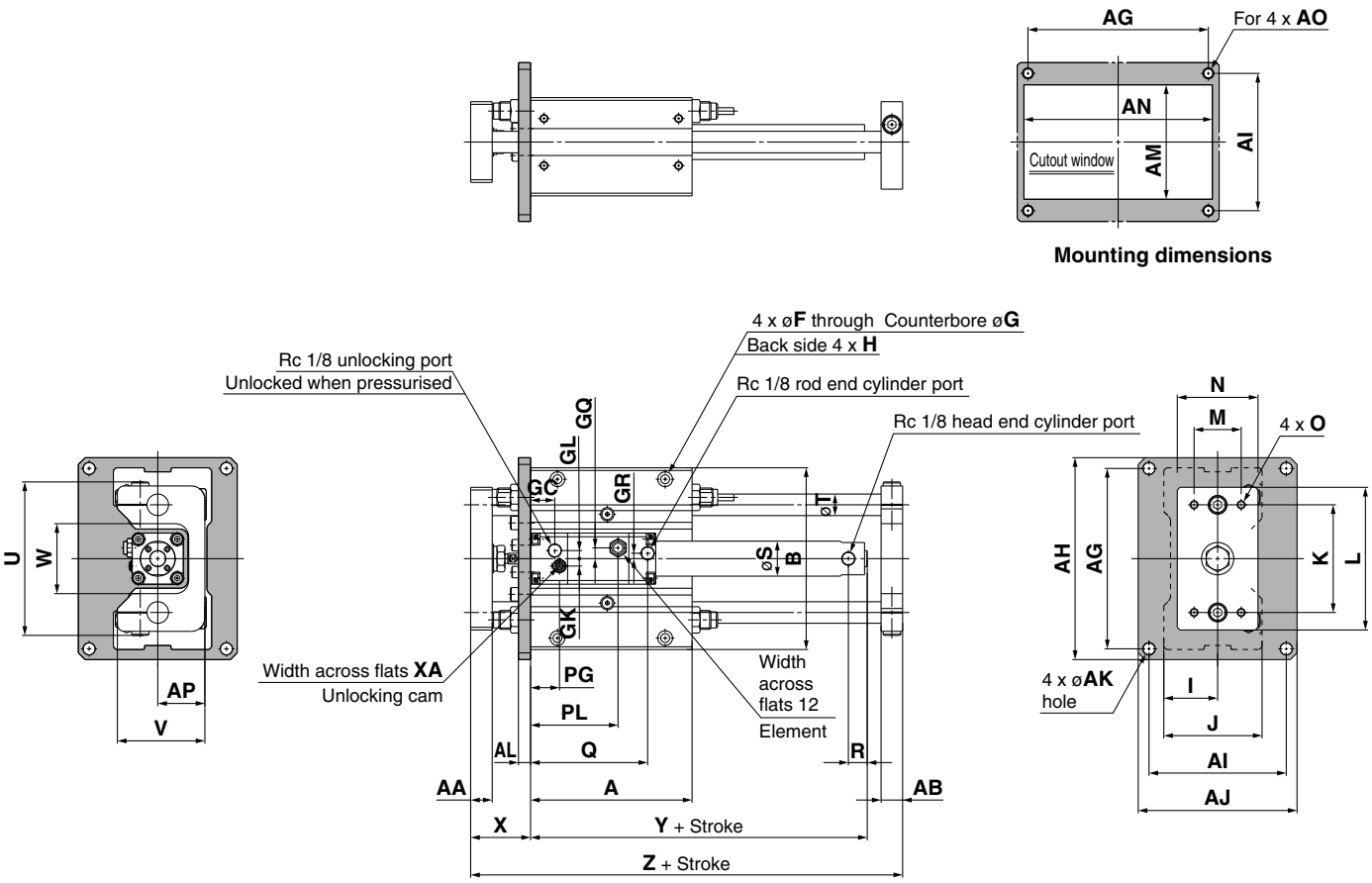

Standard Stroke (mm)

Bore size (mm)	Stroke range (mm)	A	AA	AB	AG	AH	AI	AJ	AK	AL	AM	AN	AO	AP	B	GC	GK	GL	GQ	GR	I	J	K	L	M	N
20	75, 100, 125, 150, 200	120	12	16	134	150	102	118	9	9	85	140	M8	35	135	18	5.5	6	8	4	40	73	80	106	35	60
25	75, 100, 125	140	16	19	170	186	134	150	9	9	105	175	M8	45	170	25	6.5	9	10	7	50	93	95	134	50	75
32	150, 200	140	16	19	170	186	134	150	9	9	105	175	M8	45	170	25	6.5	9	10	7	50	93	95	134	50	75
40	250, 300	170	19	21	190	210	140	160	11	12	115	200	M10	50	194	26	7	11	12	7	55	103	115	152	56	90

Bore size (mm)	O	PG	PL	Q	R	S	T	U	V	W	X	XA	Y	Z
20	M6 depth 9	21.5	65	85	12	26	16	114	65	52	39	3	143	194
25	M8 depth 13	26.5	73	96	12	31	20	138	84	62	46	3	153	228
32	M8 depth 13	26.5	73	97	12	38	20	138	84	62	46	3	156	228
40	M10 depth 16	28	81	104	12	47	25	164	94	75	56	4	171	274

Long Stroke

Bore size (mm)	Stroke range (mm)	R	Y
20	250 to 400	14	151
25	350 to 500	14	161
32	350 to 600	14	164
40	350 to 800	15	180

Series MGG/MGC
Made to Order 12

Please contact SMC for detailed specifications, lead times, and prices.

Made to Order

Symbol

15 Built-in Cylinder with Lock (CDNG) — XC73

This type is a built-in cylinder with lock, which accommodates intermediate stops, emergency stops and drop prevention, etc.

How to Order

MGC | Bearing | Mounting | Bore size | – | Stroke | – | With/Without rear plate | – | Auto switch | – **XC73**

XC73: Built-in cylinder with lock

Specifications

Series		MGC			
Bore size (mm)		20	25	32	40
Basic cylinder		CDNGBA	Bore size	– Stroke – D –	Auto switch
Minimum operating pressure		0.2 MPa (Horizontal with no load)			
Piston speed		50 to 750 mm/s Note)			
Non-rotating accuracy *2	Slide bearing	±0.06°	±0.05°		±0.04°
	Ball bushing bearing	±0.04°	±0.04°		±0.04°

Note) When the piston is locked, the load weight is limited by the mounting orientation and the operating pressure. For lock specifications, etc., refer to the CNG series in SMC's "Best Pneumatics" catalogue.

*1 Specifications other than those shown on the left are the same as standard type.

*2 When the cylinder is retracted (initial value), with no load or without deflection of the guide rod, the non-rotating accuracy shall be the value in the table or less.

Dimensions

Basic / MGC□B
ø20 to ø40

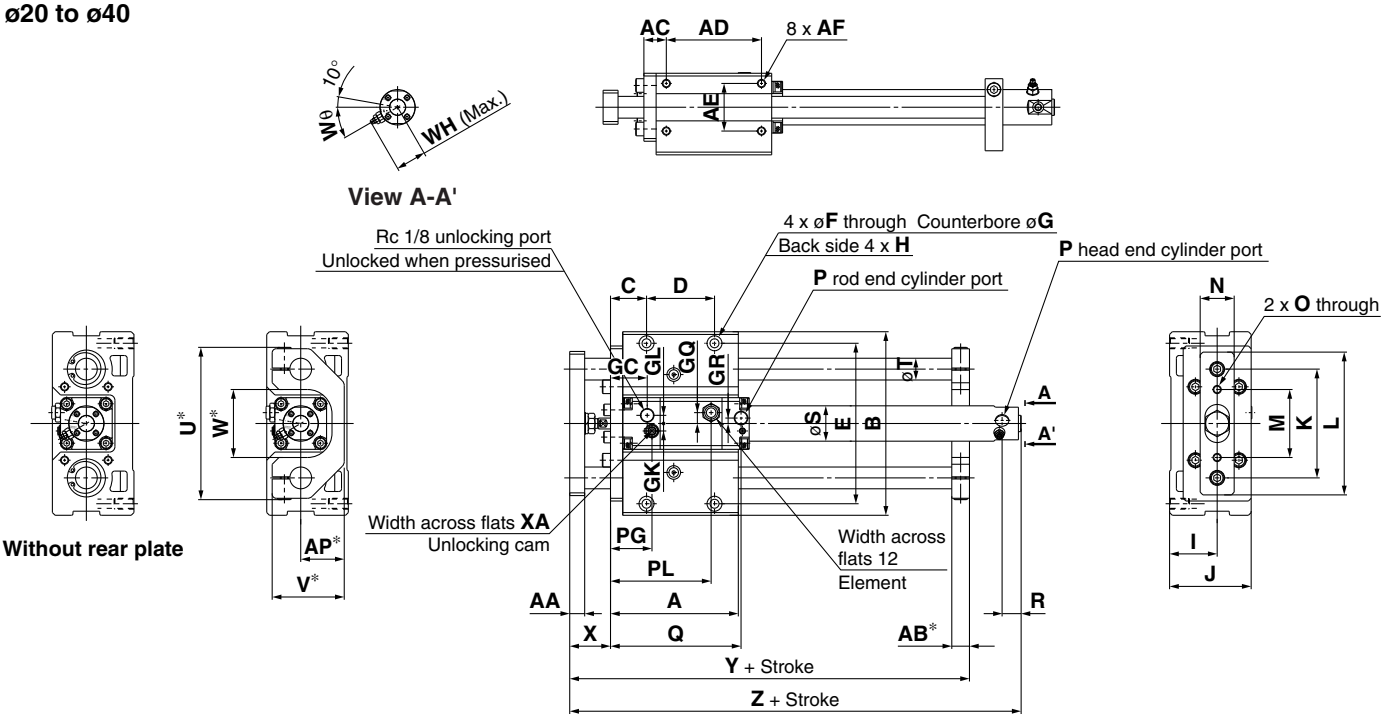

Standard Stroke

(mm)

Bore size (mm)	Stroke range (mm)	A	AA	AB*	AC	AD	AE	AF	AP*	B	C	D	E	F	G	GC	GK	GL	GQ	GR	H	I	J	K
20	75, 100, 125, 150, 200	94	12	13	16.5	70	35	M6 depth 12	32	135	26.5	50	118	6.8	11 depth 8	27	5.5	6	10	4	M8 depth 14	35	60	80
25	75, 100, 125	104	16	16	19	75	40	M8 depth 16	37	160	31.5	50	140	8.6	14 depth 10	34	6.5	9	10	7	M10 depth 18	40	70	95
32	150, 200	104	16	16	19	75	40	M8 depth 16	37	160	31.5	50	140	8.6	14 depth 10	34	6.5	9	12	7	M10 depth 18	40	70	95
40	250, 300	142	19	19	22	110	45	M10 depth 20	42	194	37	80	170	10.5	17 depth 12	38	7	11		7	M12 depth 21	45	82.5	115

Bore size (mm)	L	M	N	O	P	PG	PL	Q	R	S	T	U*	V*	W*	WH	Wθ	X	XA	Y	Z
20	105	50	25	M6	M5	30.5	74	96	12	26	16	112	53	50	23	30°	30	3	148	182
25	125	60	32	M8	M5	35.5	82	106	12	31	20	132	63	60	25	30°	37	3	169	199
32	125	60	32	M8	Rc 1/8	35.5	82	106	12	38	20	132	63	60	28.5	25°	37	3	169	202
40	150	75	38	M8	Rc 1/8	40	93	116	12	47	25	162	73	70	33	20°	44	4	210	227

Long Stroke

Bore size (mm)	Stroke range (mm)	R	Y
20	250 to 400	14	190
25	350 to 500	14	207
32	350 to 600	14	210
40	350 to 800	15	236

Note) In the case of the one without rear plate, the dimension with * is not required.

SMC

Made to Order

Symbol
15 Built-in Cylinder with Lock (CDNG) — XC73

Dimensions

Front mounting flange: MGC□F
ø20 to ø40

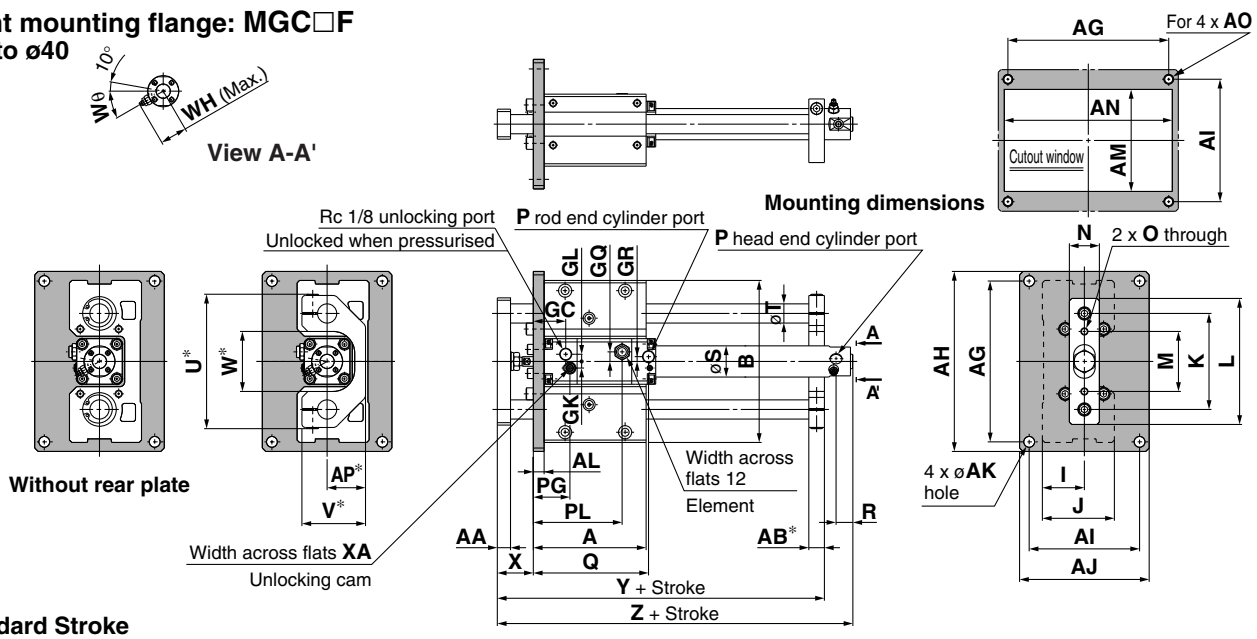

Standard Stroke (mm)

Bore size (mm)	Stroke range (mm)	A	AA	AB*	AG	AH	AI	AJ	AK	AL	AM	AN	AO	AP*	B	GC	GK	GL	GQ	GR	I	J	K	L	M	N
20	75, 100, 125, 150, 200	94	12	13	134	150	92	108	9	9	75	140	M8	32	135	27	5.5	6	8	4	35	60	80	105	50	25
25	75, 100, 125 150, 200, 250 300	104	16	16	160	176	110	125	9	9	88	165	M8	37	160	34	6.5	9	10	7	40	70	95	125	60	32
32		104	16	16	160	176	110	125	9	9	88	165	M8	37	160	34	6.5	9	10	7	40	70	95	125	60	32
40		142	19	19	190	210	115	135	11	12	96	200	M10	42	194	38	7	11	12	7	45	82.5	115	150	75	38

Bore size (mm)	O	P	PG	PL	Q	R	S	T	U*	V*	W*	WH	Wθ	X	XA	Y	Z
20	M6	M5	30.5	74	96	12	26	16	112	53	50	23	30°	30	3	148	182
25	M8	M5	35.5	82	106	12	31	20	132	63	60	25	30°	37	3	169	199
32	M8	Rc 1/8	35.5	82	106	12	38	20	132	63	60	28.5	25°	37	3	169	202
40	M8	Rc 1/8	40	93	116	12	47	25	162	73	70	33	20°	44	4	210	227

Long Stroke

Bore size (mm)	Stroke range (mm)	R	Y
20	250 to 400	14	190
25	350 to 500	14	207
32	350 to 600	14	210
40	350 to 800	15	236

Note) In the case of the one without rear plate, the dimension with ∗ is not required.

Symbol
16 With Front Plate for MGG Cylinder — XC74

Type using equivalent to MGG cylinder's standard front plate.

How to Order

MGC [Standard model no.] **—XC74**
With front plate for MGG cylinder

Specifications

Applicable series	MGC
Bore size (mm)	20, 25, 32, 40, 50
Fluid	Air
Minimum operating pressure	0.15 MPa (Horizontal, No-load)
Piston speed	50 to 750 mm/s
Auto switch	Mountable

∗ Specifications other than above are the same as standard type.

Dimensions (Dimensions other than below are the same as standard type.)

ø20 to ø50

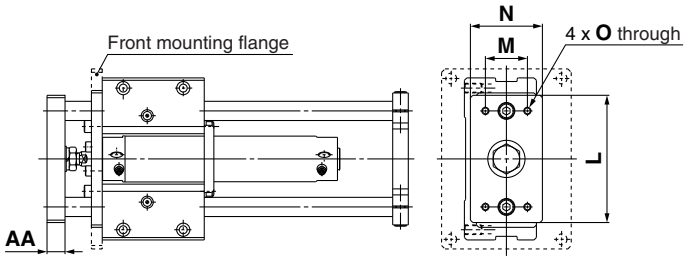

(mm)

Bore size (mm)	L	M	N	O	AA
20	80	25	45	M6	12
25	100	35	54	M6	16
32	106	35	60	M6	16
40	134	50	75	M8	19
50	152	56	90	M10	25

Made to Order 14

Please contact SMC for detailed specifications, lead times, and prices.

Made to Order

Symbol

17 Auto Switch Mounting Special Dimensions at Stroke End — XC78

Auto switch mounting position at stroke end is assembled as below.

How to Order

MGC [**Standard model no.**] **−XC78**

XC78: Auto switch mounting special dimensions at stroke end

Specifications

Applicable series	MGC
Bore size (mm)	20, 25, 32, 40, 50
Applicable cylinder	Guide cylinder
Specifications other than above	Same as standard type.

Dimensions (Dimensions other than below are the same as standard type.)

D-A9 type, D-M9/M9□W type

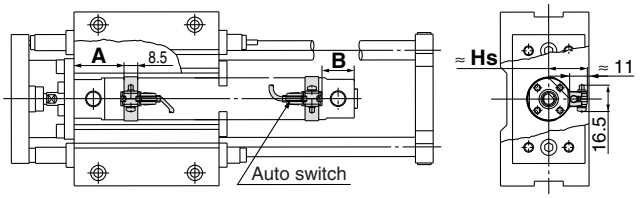

D-B5/B6 type, D-G5/K5 type

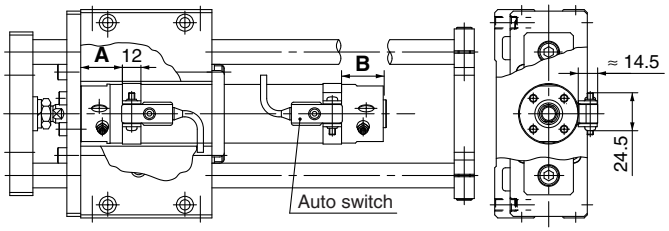

D-C7/C8 type, D-H7 type

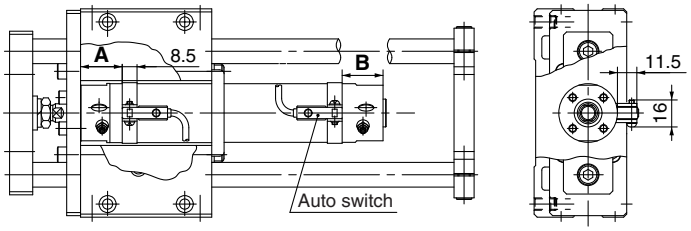

D-B7/B8 type, D-G7/K7 type

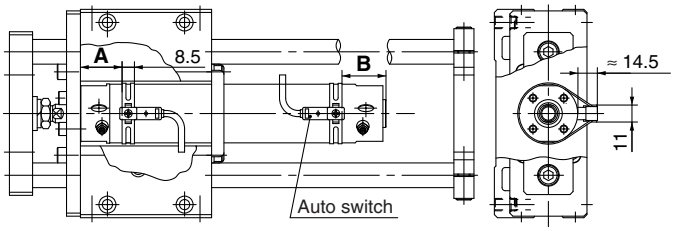

Auto Switch Proper Mounting Position

(mm)

Auto switch model / Bore size (mm)	D-A9□		D-M9□ D-M9□W		D-B7/B8 D-B73C D-B80C D-G7/K7 D-K79C		D-C7□ D-C80 D-C73C D-C80C		D-B5□ D-B64		D-B59W		D-H7□ D-H7C D-H7NF D-H7□W D-H7BAL		D-G59F/G5□ D-K59 D-G5□W D-K59W D-G5NTL D-G5BAL	
	A	B	A	B	A	B	A	B	A	B	A	B	A	B	A	B
20	29	20 (28)	33	24 (32)	30.5	21.5 (29.5)	29.5	20.5 (28.5)	23.5	15.5 (22.5)	26.5	17.5 (25.5)	28.5	19.5 (27.5)	25	16 (24)
25	29	20 (28)	33	24 (32)	30.5	21.5 (29.5)	29.5	20.5 (28.5)	23.5	15.5 (22.5)	26.5	17.5 (25.5)	28.5	19.5 (27.5)	25	16 (24)
32	30	21 (29)	34	25 (33)	31.5	22.5 (30.5)	30.5	21.5 (29.5)	24.5	15.5 (23.5)	27.5	18.5 (26.5)	29.5	20.5 (28.5)	26	17 (25)
40	35	23 (32)	39	27 (36)	36.5	24.5 (33.5)	35.5	23.5 (32.5)	29.5	19 (26.5)	32	20.5 (29.5)	34.5	22.5 (31.5)	31	19 (28)
50	42	28 (40)	46	32 (36)	43.5	29.5 (41.5)	42.5	28.5 (40.5)	36.5	22.5 (34.5)	39.5	25.5 (37.5)	41.5	27.5 (39.5)	38	24 (36)

∗ ( ): Values for long strokes and double rods.

Note) When setting an auto switch, confirm the operation and adjust its mounting position.

Please contact SMC for detailed specifications, lead times, and prices.

Made to Order

Symbol
XC83

18 Built-in Cylinder with Lock (MDNB)

This type is a built-in cylinder with lock, which accommodates intermediate stops, emergency stops and drop prevention, etc.

How to Order

MGG [Bearing] [Mounting] [Bore size] – [Stroke] – [Auto switch] – XC83

Built-in cylinder with lock

Specifications

Series		MGG			
Bore size (mm)		50	63	80	100
Basic cylinder		MDNBB [Bore size] – [Stroke] – D – [Auto switch] – X1189			
Minimum operating pressure		0.2 MPa (Horizontal with no load)			
Piston speed Note)		50 to 1000 mm/s	50 to 700 mm/s		
Stroke adjustment range (One side) [Built-in adjusting bolts (2 pcs.)]		0 to –15mm			
Non-rotating accuracy *2	Slide bearing	±0.04°		±0.03°	
	Ball bushing bearing	±0.03°		±0.02°	
Shock absorber model		RB2015	RB2725		

Note) When the piston is locked, the load weight is limited by the mounting orientation and the operating pressure. For lock specifications, etc., refer to the CNG series in SMC's "Best Pneumatics" catalogue.
*1 Specifications other than those shown above are the same as standard type.
*2 When the cylinder is retracted (initial value), with no load or without deflection of the guide rod, the non-rotating accuracy shall be the value in the table or less.

Applicable Auto Switches / For detailed auto switch specifications, refer to page 56 through to 70.

Type	Special function	Electrical entry	Indicator light	Wiring (Output)	Load voltage DC		Load voltage AC	Auto switch model Tie-rod mounting	Auto switch model Band mounting	Lead wire length (m) 0.5 (-)	1 (M)	3 (L)	5 (Z)	Pre-wired connector	Applicable load	
Reed switch	——	Grommet	Yes	3-wire (NPN equivalent)	—	5V	—	A96	—	●	—	●	—	—	IC circuit	—
			No	2-wire	24V	12V	100 V	A93	—	●	—	●	—	—	—	Relay, PLC
							100 V or less	A90	—	●	—	●	—	—	IC circuit	
		Terminal conduit	Yes				—	—	A33	—	—	—	—	—	—	PLC
							100 V, 200 V	—	A34	—	—	—	—	—	—	Relay, PLC
		DIN terminal						—	A44	—	—	—	—	—		
Solid state switch	——	Grommet	Yes	3-wire (NPN)	24V	5V,12V	—	M9N	—	●	—	●	○	○	IC circuit	Relay, PLC
				3-wire (PNP)				M9P	—	●	—	●	○	○		
				2-wire		12V		M9B	—	●	—	●	○	○		
		Terminal conduit		3-wire (NPN)		5V,12V	—	—	G39	—	—	—	—	—	—	
				2-wire		12V		—	K39	—	—	—	—	—		
	Diagnostic indication (2-colour indication)	Grommet		3-wire (NPN)		5V,12V		M9NW	—	●	●	●	○	○	IC circuit	
				3-wire (PNP)				M9PW	—	●	●	●	○	○		
				2-wire		12V		M9BW	—	●	●	●	○	○	—	
	Water resistant (2-colour indication)							M9BA	—	—	—	●	○	○		

* Lead wire length symbols: 0.5 m ····· - (Example) M9NW
1 m ····· M (Example) M9NWM
3 m ····· L (Example) M9NWL
5 m ····· Z (Example) M9NWZ

* Solid state switches marked with "○" are produced upon receipt of order.

* Since there are other applicable auto switches than listed, refer to page 36 for details.
* For details about auto switches with pre-wired connector, refer to SMC's "Best Pneumatics" catalogue.
* D-A9□, M9□, M9□W, M9BA are shipped together (but not assembled). (Only switch mounting bracket is assembled at the time of shipment.)

Auto Switch Mounting Bracket Part No.

Auto switch model	Bore size (mm) ø50	ø63	ø80	ø100
D-A9□/A9□V D-M9□/M9□V D-M9□W/M9□WV D-M9BAL	BA7-040	BA7-040	BA7-063	BA7-063
D-A3□/A44 D-G39/K39	BMB1-050	BMB1-063	BMB1-080	BMB1-100
D-Z7□/Z80 D-Y59□/Y69□ D-Y7P/Y7PV D-Y7□W/Y7□WV D-Y7BAL	BMB4-050	BMB4-050	BA4-063	BA4-063

[Mounting screws set made of stainless steel]

The following set of mounting screws made of stainless steel is also available. Use it in accordance with the operating environment.

BBA1: For D-A5, A6, F5, J5 type

"D-M9BAL/Y7BAL" switch is set on the cylinder with the stainless steel screws above when shipped.

Series MGG/MGC
Made to Order 16

Please contact SMC for detailed specifications, lead times, and prices.

Made to Order

18 Built-in Cylinder with Lock (MDNB)

Symbol
XC83

Other than the applicable auto switches listed in “How to Order”, the following auto switches can be mounted.
For detailed specifications, refer to SMC's “Best Pneumatics” catalogue, etc.

Type	Model	Electrical entry (Direction)	Features
Reed switch	D-A93V, A96V	Grommet (Perpendicular)	—
	D-A90V		Without indicator light
	D-Z73, Z76	Grommet (in-line)	—
	D-Z80		Without indicator light
Solid state switch	D-M9NV, M9PV, M9BV	Grommet (Perpendicular)	—
	D-Y69A, Y69B, Y7PV		
	D-M9NWV, M9PWV, M9BWV		Diagnostic indication (2-colour indication)
	D-Y7NWV, Y7PWV, Y7BWV		
	D-Y59A, Y59B, Y7P	Grommet (in-line)	—
	D-Y7NW, Y7PW, Y7BW		Diagnostic indication (2-colour indication)
	D-Y7BAL		Water resistant (2-colour indication)

∗ With pre-wired connector is available for solid state auto switches. For details, refer to SMC's “Best Pneumatics” catalogue.
∗ Normally closed (NC = b contact), solid state switches (D-F9G, F9H, Y7G, Y7H type) are also available. For details, refer to SMC's “Best Pneumatics” catalogue.

Regarding the minimum stroke for auto switch mounting, proper mounting position, operating range, refer to the MNB series SMC's “Best Pneumatics” catalogue.

Dimensions

Basic
ø50 to ø100



ø100 piston rod end tightening part

Standard Stroke (mm)

Bore size (mm)	Stroke range (mm)	A	AA	AB	AC	AD	AE	AF	AL	AP	B	C	D	E	F	G	GC	GD	GL	GL1	GR	H	I
50	75, 100, 125 150, 200 250, 300	200	25	25	15	170	50	M12 depth 24	12	60	228	30	140	200	13.5	20 depth 14.5	58.5	19	12.5	15	5	M16 depth 28	65
63		230	25	27	15	200	55	M12 depth 24	12	70	262	30	170	234	13.5	20 depth 14.5	68	23	17.5	12	9	M16 depth 28	75
80		280	30	30	17.5	245	70	M14 depth 28	16	80	304	35	210	274	15	23 depth 17	81	33	22	18	11.5	M18 depth 32	85
100		280	32	30	17.5	245	70	M14 depth 28	16	80	304	35	210	274	15	23 depth 17	96	37.5	25	20	17	M18 depth 32	85

Bore size (mm)	J	K	L	M	N	O	P	Q	R	S	S1	T	U	V	VA	VB	W	X	Y	Z
50	117	135	180	66	100	M12 depth 23	Rc 1/4	104.5	19.5	75	65	30	192	108	20	9	86	69	187	323
63	138	160	214	76	115	M12 depth 23	Rc 3/8	119.5	20.5	90	75	35	224	128	23	8.5	104	69	201	358
80	153	190	245	80	125	M14 depth 28	Rc 3/8	150	23	102	95	40	262	143	23	10.5	128	87	249	431
100	153	190	245	80	125	M14 depth 30	Rc 1/2	170	23	116	114	40	262	143	37.5	10.5	128	87	269	431

Long Stroke

Bore size (mm)	Stroke range (mm)
50	350 to 1000
63	350 to 1000
80	350 to 1000
100	350 to 1000

SMC

Please contact SMC for detailed specifications, lead times, and prices.

Made to Order

Symbol
XC83

18 Built-in Cylinder with Lock (MDNB)

Dimensions

Front mounting flange
ø50 to ø100

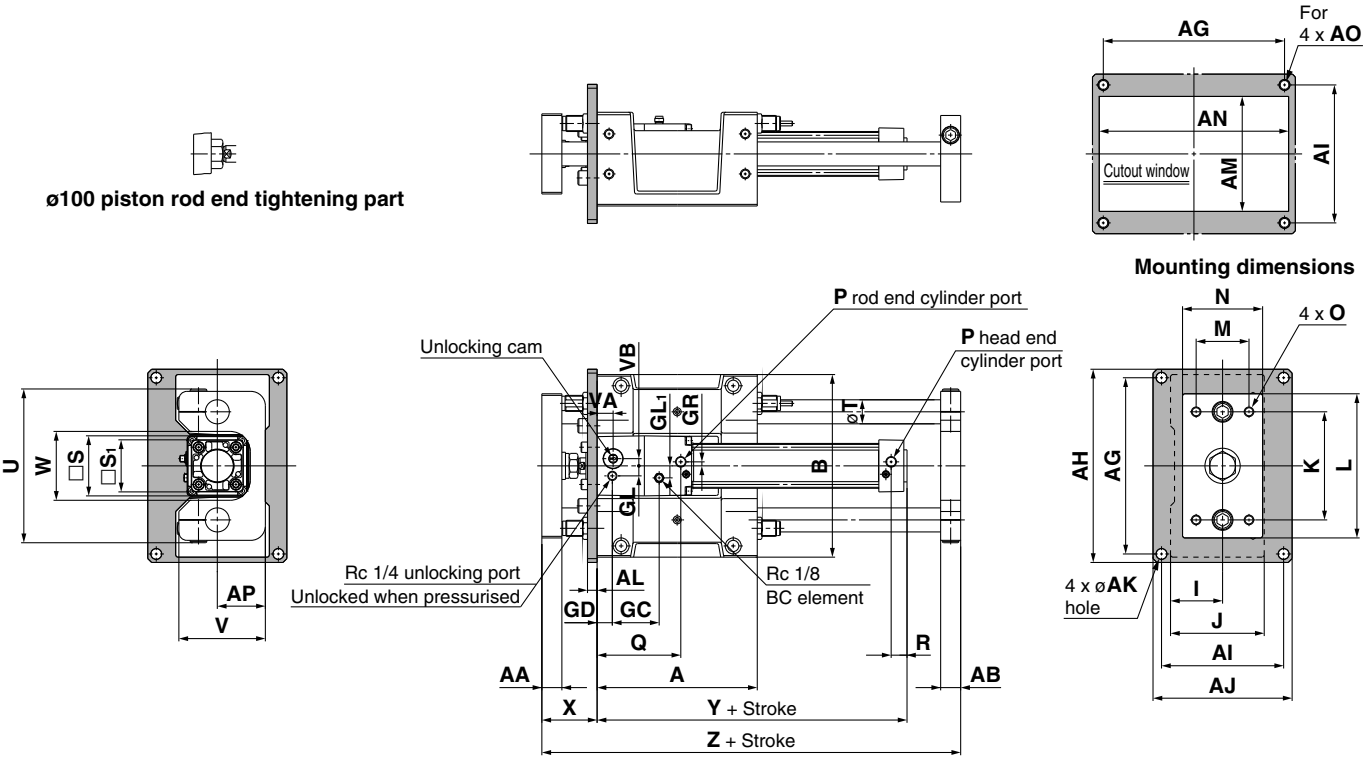

Standard Stroke (mm)

Bore size (mm)	Stroke range (mm)	A	AA	AB	AG	AH	AI	AJ	AK	AL	AM	AN	AO	AP	B	GC	CD	GL	GL_1	GR	I	J	K	L	M	N
50	75, 100, 125 150, 200 250, 300	200	25	25	228	250	158	180	14	12	135	234	M12	60	228	58.5	19	12.5	15	5	65	117	135	180	66	100
63		230	25	27	262	284	178	200	14	12	155	268	M12	70	262	68	23	17.5	12	9	75	138	160	214	76	115
80		280	30	30	300	326	200	226	16	16	175	310	M14	80	304	81	33	22	18	11.5	85	153	190	245	80	125
100		280	32	30	300	326	200	226	16	16	175	310	M14	80	304	96	37.5	25	20	17	85	153	190	245	80	125

Bore size (mm)	O	P	Q	R	S	S_1	T	U	V	VA	VB	W	X	Y	Z
50	M12 depth 23	Rc 1/4	104.5	19.5	75	65	30	192	108	20	9	86	69	187	323
63	M12 depth 23	Rc 3/8	119.5	20.5	90	75	35	224	128	23	8.5	104	69	201	358
80	M14 depth 28	Rc 3/8	150	23	102	95	40	262	143	33	10.5	128	87	249	431
100	M14 depth 30	Rc 1/2	170	23	116	114	40	262	143	37.5	10.5	128	87	269	431

Long Stroke

Bore size (mm)	Stroke range (mm)
50	350 to 1000
63	350 to 1000
80	350 to 1000
100	350 to 1000

Please contact SMC for detailed specifications, lead times, and prices.

Made to Order

19 With Piping Ports for Grease

Symbol **X440**

This type is equipped with Rc 1/8 piping grease ports on both sides of the guide body.

How to Order

MGG
MGC
Standard model no. **−X440**

With piping ports for grease

Specifications

Applicable series	MGG	MGC
Bore size (mm)	20, 25, 32, 40, 50 63, 80, 100	20, 25, 32, 40, 50
Fluid	Air	
Minimum operating pressure	0.15 MPa (Horizontal, No load)	
Piston speed	50 to 1000 mm/s	50 to 750 mm/s
Auto switch	Mountable	
Specifications other than above	Same as standard type.	

Dimensions (Dimensions other than below are the same as standard type.)

Series MGG
ø20 to ø50

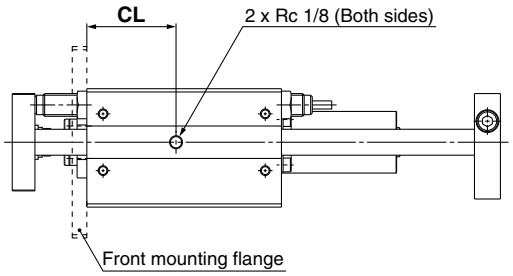

ø63 to ø100

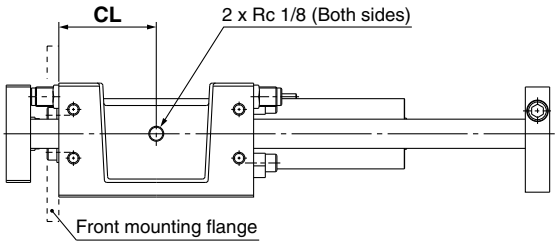

(mm)

Series	MGG	MGC
Bore size (mm)	CL	CL
20	40	42
25	45	44
32	55	46.5
40	65	54.5
50	80	70.5
63	100	—
80	115	—
100	140	—

∗ The standard grease supply port has a hexagon socket head set screw.

Series MGC
ø20 to ø50

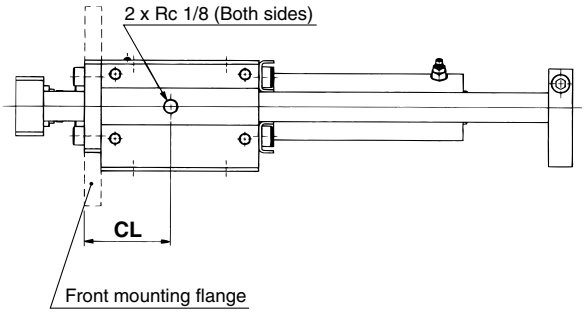

Please contact SMC for detailed specifications, lead times, and prices.

Made to Order

Symbol

19 With Piping Ports for Grease (Water resistant type) — X440

Type with piping ports (Rc 1/8) for grease on both sides of guide body.

How to Order

MGG M | Mounting | Bore size | Port thread | R | — | Stroke | — | G5BAL | Suffix for auto switch | — | X440

- M: Slide bearing
- R: Water resistant cylinder

R	NBR seal (Nitrile rubber)
V	FKM seal (Fluoro rubber)

- G5BAL: Water resistant 2-colour indication solid state switch
- X440: With piping ports for grease

Specifications

Applicable series	MGGM
Bore size (mm)	32, 40, 50, 63, 80, 100
Fluid	Air
Minimum operating pressure	0.15 MPa (Horizontal, No load)
Piston speed	50 to 1000 mm/s
Auto switch	Available for mounting (Water resistant type)
Bearing type	Slide bearing
Specifications other than above	Same as standard type.

∗ The RBL (coolant resistant type) shock absorbers are used.

Dimensions (Dimensions other than below are the same as standard type.)

ø20 to ø50

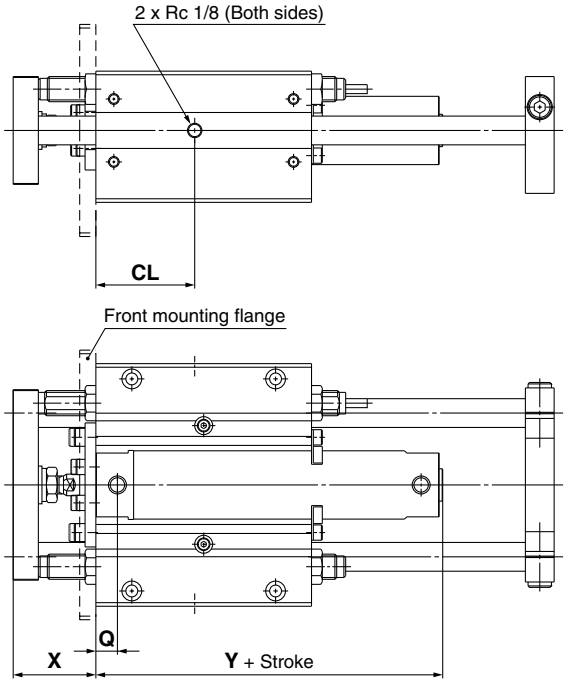

ø63 to ø100

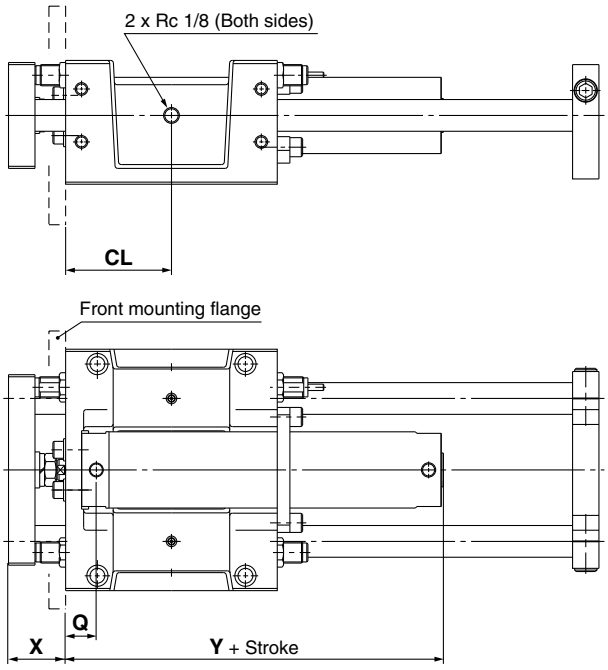

(mm)

Bore size (mm)	Q	X	Y	CL
32	16	48	77 (85)	55
40	17	58	84 (93)	65
50	19	69	97 (109)	80
63	34	56	112 (124)	100
80	46	68	137 (151)	115
100	47	68	138 (152)	140

∗ ( ): Values for long strokes.
∗ The standard grease supply port has a hexagon socket head set screw.

Series MGG/MGC
Made to Order 20

Please contact SMC for detailed specifications, lead times, and prices.

Made to Order

Symbol

20 Auto Switch Rail Mounting Style / With Piping Ports for Grease — X772

Cylinder with auto switch rail mounting with piping grease ports (Rc 1/8) on both sides of guide body.

How to Order

MGG [Bearing] [Mounting] [Bore size] — [Stroke] — [Auto switch] — **X772**

X772: Auto switch rail mounting style with piping ports for grease

Dimensions (Dimensions other than below are the same as standard type.)

ø20 to ø50

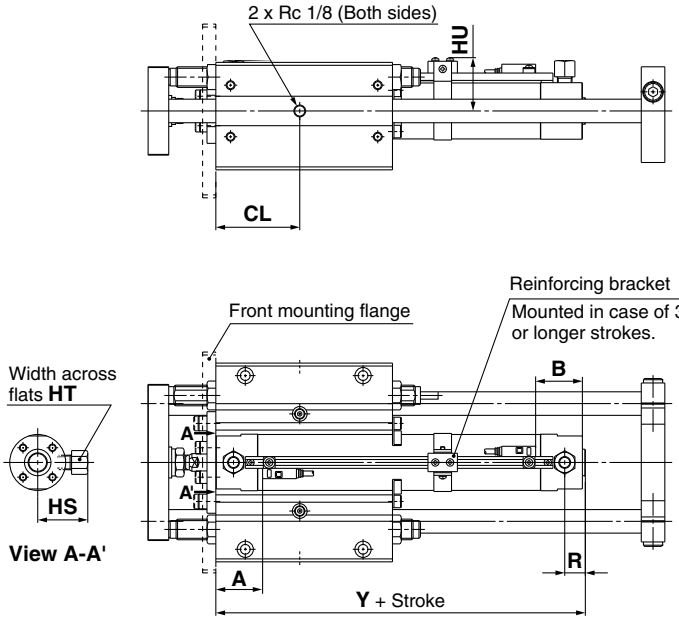

ø63 to ø100

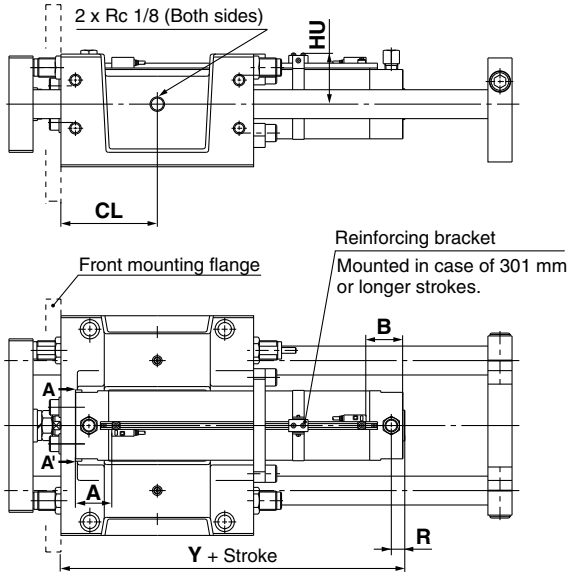

(mm)

Bore size (mm)	R	Y	CL	HS	HT	HU
20	14	99	40	28.5	14	30.7
25	14	99	45	31	14	33.2
32	14	101	55	34.5	14	36.5
40	15	109	65	39	14	41
50	16	124	80	49.5	17	46.2
63	16	139	100	56.5	17	53.2
80	23	165	115	75.5	23	62.2
100	23	165	140	86	26	72.7

∗ The standard grease supply port has a hexagon socket head set screw.

Auto Switch Mounting Position

(mm)

Auto switch model / Applicable bore size	D-A72/A7H/A80H D-A73C/A80C D-F7□/F7□V/F7□W D-F7□WV/F7BAL D-J7□/F79F/F7BAVL		D-A73 D-A80		D-A79W		D-F7NTL	
	A	B	A	B	A	B	A	B
20	40.5	39.5	40	39	37.5	36.5	45.5	44.5
25	40.5	39.5	40	39	37.5	36.5	45.5	44.5
32	41.5	40.5	41	40	38.5	37.5	46.5	45.5
40	46.5	43.5	46	43	43.5	40.5	51.5	48.5
50	53.5	51.5	53	51	50.5	48.5	58.5	56.5
63	53.5	51.5	53	51	50.5	48.5	58.5	56.5
80	63.5	51.5	63	51	60.5	48.5	68.5	56.5
100	63.5	51.5	63	51	60.5	48.5	68.5	56.5

Auto Switch Mounting Height

(mm)

Auto switch model / Applicable bore size	D-A7□ D-A80	D-A7□H/J79W D-A80H/F7BAL D-F7□/F79F D-F79/F7NTL D-F7□W	D-A73C D-A80C	D-F7□V D-F7□WV D-F7BAVL	D-J79C	D-A79W
	Hs	Hs	Hs	Hs	Hs	Hs
20	26.5	26.5	32.5	29	31	30
25	29	29	35	31.5	33.5	32.5
32	32	32.5	38.5	34.5	36.5	35.5
40	36.5	37	43	39	41	40
50	42	42	48	44.5	46.5	45.5
63	49	49	55	51.5	53.5	52.5
80	58	58	64	60.5	62.5	61.5
100	68.5	69	74.5	71	73	72

Note) When setting an auto switch, confirm the operation and adjust its mounting position.

SMC

Please contact SMC for detailed specifications, lead times, and prices.

Made to Order

Symbol

20 Auto Switch Rail Mounting Style / With Piping Ports for Grease (Water resistant type) X772

Type with piping ports (Rc 1/8) for grease on both sides of guide body.

How to Order

MGG **M** | Mounting | Bore size | **R** | − | Stroke | − **F7BAL** | Suffix for auto switch | − **X772**

- **M**: Slide bearing
- **R**: Water resistant cylinder

R	NBR seal (Nitrile rubber)
V	FKM seal (Fluoro rubber)

- **F7BAL**: Water resistant 2-colour indication solid state switch
- **X772**: Auto switch rail mounting with piping ports for grease

Specifications

Applicable series	MGGM
Bore size (mm)	32, 40, 50, 63, 80, 100
Fluid	Air
Minimum operating pressure	0.15 MPa (Horizontal, No load)
Piston speed	50 to 1000 mm/s
Auto switch	Available for mounting (Water resistant type)
Bearing type	Slide bearing
Specifications other than above	Same as standard type.

∗ The RBL (coolant resistant type) shock absorbers are used.

Dimensions (Dimensions other than below are the same as standard type.)

ø32 to ø50

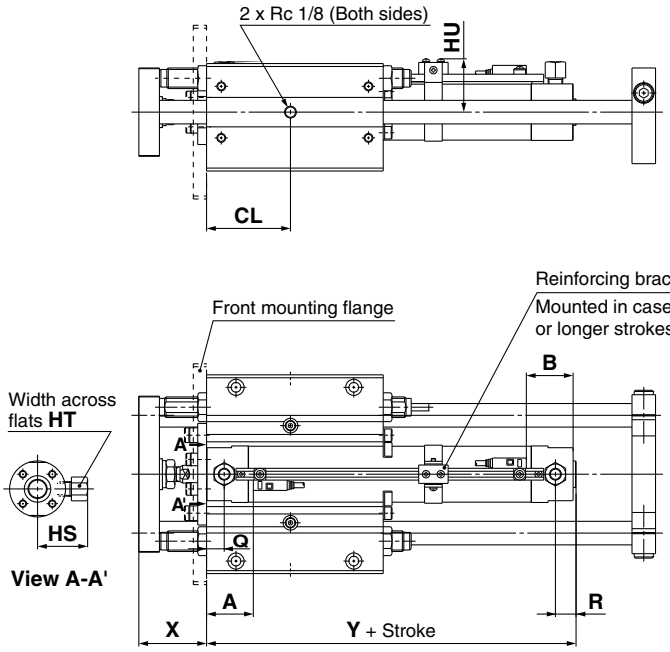

ø63 to ø100

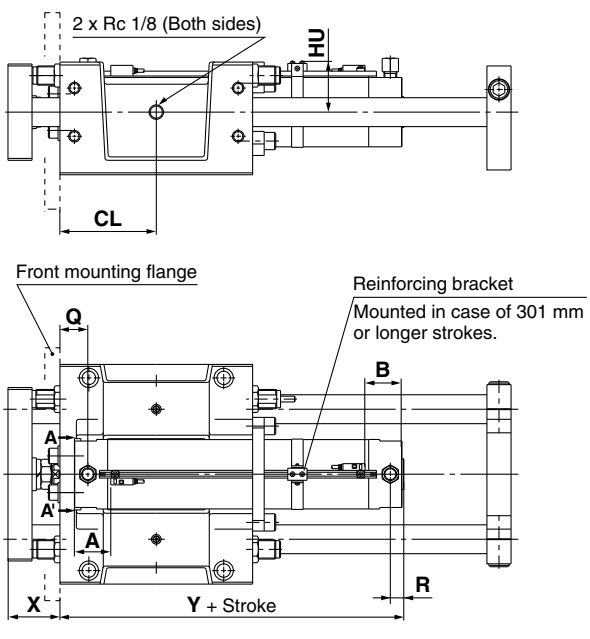

(mm)

Bore size (mm)	Q	R	X	Y	CL	HS	HT	HU
32	16	14	48	105	55	34.5	14	36.5
40	17	15	58	113	65	39	14	41
50	19	16	69	129	80	49.5	17	46.2
63	34	16	56	144	100	56.5	17	53.2
80	46	23	68	171	115	75.5	23	62.2
100	47	23	68	172	140	86	26	72.2

∗ The standard grease supply port has a hexagon socket head set screw.

Auto Switch Mounting Position (mm)

Applicable bore size \ Auto switch model	D-F7BAL/F7BAVL	
	A	**B**
32	41.5	40.5
40	46.5	43.5
50	53.5	51.5
63	53.5	51.5
80	63.5	51.5
100	63.5	51.5

Note) When setting an auto switch, confirm the operation and adjust its mounting position.

Auto Switch Mounting Height (mm)

Applicable bore size \ Auto switch model	D-F7BAL	D-F7BAVL
	Hs	**Hs**
32	32.5	34.5
40	37	39
50	42	44.5
63	49	51.5
80	58	60.5
100	69	71

Series MGG/MGC
Safety Instructions

These safety instructions are intended to prevent a hazardous situation and/or equipment damage. These instructions indicate the level of potential hazard by labels of **"Caution", "Warning"** or **"Danger"**. To ensure safety, be sure to observe ISO 4414 Note 1), JIS B 8370 Note 2) and other safety practices.

■ Explanation of the Labels

Labels	Explanation of the labels
⚠ **Danger**	In extreme conditions, there is a possible result of serious injury or loss of life.
⚠ **Warning**	Operator error could result in serious injury or loss of life.
⚠ **Caution**	Operator error could result in injury Note 3) or equipment damage. Note 4)

Note 1) ISO 4414: Pneumatic fluid power – General rules relating to systems
Note 2) JIS B 8370: General Rules for Pneumatic Equipment
Note 3) Injury indicates light wounds, burns and electrical shocks that do not require hospitalisation or hospital visits for long-term medical treatment.
Note 4) Equipment damage refers to extensive damage to the equipment and surrounding devices.

■ Selection/Handling/Applications

1. The compatibility of the pneumatic equipment is the responsibility of the person who designs the pneumatic system or decides its specifications.
Since the products specified here are used in various operating conditions, their compatibility for the specific pneumatic system must be based on specifications or post analysis and/or tests to meet the specific requirements. The expected performance and safety assurance are the responsibility of the person who has determined the compatibility of the system. This person should continuously review the suitability of all items specified, referring to the latest catalogue information with a view to giving due consideration to any possibility of equipment failure when configuring a system.

2. Only trained personnel should operate pneumatically operated machinery and equipment.
Compressed air can be dangerous if handled incorrectly. Assembly, handling or repair of pneumatic systems should be performed by trained and experienced operators. (Understanding JIS B 8370 General Rules for Pneumatic Equipment, and other safety rules are included.)

3. Do not service machinery/equipment or attempt to remove components until safety is confirmed.
1. Inspection and maintenance of machinery/equipment should only be performed once measures to prevent falling or runaway of the driven objects have been confirmed.
2. When equipment is removed, confirm that safety process as mentioned above. Turn off the supply pressure for this equipment and exhaust all residual compressed air in the system, and release all the energy (liquid pressure, spring, condenser, gravity).
3. Before machinery/equipment is restarted, take measures to prevent quick extension of a cylinder piston rod, etc.

4. If the equipment will be used in the following conditions or environment, please contact SMC first and be sure to take all necessary safety precautions.
1. Conditions and environments beyond the given specifications, or if product is used outdoors.
2. Installation on equipment in conjunction with atomic energy, railway, air navigation, vehicles, medical equipment, food and beverages, recreation equipment, emergency stop circuits, clutch and brake circuits in press applications, or safety equipment.
3. An application which has the possibility of having negative effects on people, property, requiring special safety analysis.
4. If the products are used in an interlock circuit, prepare a double interlock style circuit with a mechanical protection function for the prevention of a breakdown. And, examine the devices periodically if they function normally or not.

■ Exemption from Liability

1. SMC, its officers and employees shall be exempted from liability for any loss or damage arising out of earthquakes or fire, action by a third person, accidents, customer error with or without intention, product misuse, and any other damages caused by abnormal operating conditions.

2. SMC, its officers and employees shall be exempted from liability for any direct or indirect loss or damage, including consequential loss or damage, loss of profits, or loss of chance, claims, demands, proceedings, costs, expenses, awards, judgments and any other liability whatsoever including legal costs and expenses, which may be suffered or incurred, whether in tort (including negligence), contract, breach of statutory duty, equity or otherwise.

3. SMC is exempted from liability for any damages caused by operations not contained in the catalogues and/or instruction manuals, and operations outside of the specification range.

4. SMC is exempted from liability for any loss or damage whatsoever caused by malfunctions of its products when combined with other devices or software.

Series MGG/MGC
Auto Switches Precautions 1

Be sure to read this before handling.

Design and Selection

⚠Warning

1. Confirm the specifications.

Read the specifications carefully and use this product appropriately. The product may be damaged or malfunction if it is used outside the range of specifications of current load, voltage, temperature or impact. We do not guarantee any damage in any case the product is used outside of the specification range.

2. Pay attention to the length of time that a switch is on at an intermediate stroke position.

When an auto switch is placed at an intermediate position of the stroke and a load is driven at the time the piston passes, the auto switch will operate. However if the speed is too great, the operating time will be shortened and the load may not operate properly. The maximum detectable piston speed is:

$$V\ (mm/s) = \frac{\text{Auto switch operating range (mm)}}{\text{Load operating time (ms)}} \times 1000$$

In cases of high piston speed, the use of an auto switch (D-G5NTL) with a built-in OFF delay timer (≈ 200 ms) makes it possible to extend the load operating time.
Wide range detection type, D-G5NBL (operating range 35 to 45 mm) is also available.

3. Keep wiring as short as possible.

<Reed switch>

As the length of the wiring to a load gets longer, the rush current at switching ON becomes greater, and this may shorten the product's life. (The switch will stay ON all the time.)
Use a contact protection box when the wire length is 5 m or longer.

<Solid state switch>

Although wire length should not affect switch function, use a wire 100 m or shorter.
If the wiring is longer it will likely increase noise although the length is less than 100 m.
When the wire length is long, we recommend attaching the ferrite core to the both ends of the cable to prevent excess noise.

4. Do not use a load that generates surge voltage. If a surge voltage is generated, the discharge occurs at the contact, possibly resulting in the shortening of product life.

<Reed switch>

If driving a load such as a relay that generates a surge voltage, use a contact protection box.

<Solid state switch>

Although a zener diode for surge protection is connected at the output side of a solid state auto switch, damage may still occur if the surge is applied repeatedly. When a load, such as a relay or solenoid, which generates surge is directly driven, use a type of switch with a built-in surge absorbing element.

5. Cautions for use in an interlock circuit

When an auto switch is used for an interlock signal requiring high reliability, devise a double interlock system to avoid trouble by providing a mechanical protection function, or by also using another switch (sensor) together with the auto switch. Also perform periodic maintenance and confirm proper operation.

6. Do not make any modifications to the product.

Do not take the product apart. It may cause human injuries and accidents.

⚠Caution

1. Take precautions when multiple actuators are used close together.

When two or more actuators are lined up in close proximity to each other, magnetic field interference may cause the switches to malfunction. Maintain a minimum cylinder separation of 40 mm.
(When the allowable interval is specified for each cylinder series, use the indicated value.) The auto switches may malfunction due to the interference from the magnetic fields.

2. Take note of the internal voltage drop of the switch.

<Reed switch>

1) Switches with an indicator light (Except D-A96)
   - If auto switches are connected in series as shown below, take note that there will be a large voltage drop because of internal resistance in the light emitting diodes. (Refer to internal voltage drop in the auto switch specifications.)
     [The voltage drop will be "n" times larger when "n" auto switches are connected.]
     Even though an auto switch operates normally, the load may not operate.

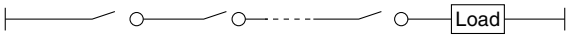

   - In the same way, when operating under a specified voltage, although an auto switch may operate normally, the load may not operate. Therefore, the formula below should be satisfied after confirming the minimum operating voltage of the load.

$$\text{Supply voltage} - \text{Internal voltage drop of switch} > \text{Minimum operating voltage of load}$$

2) If the internal resistance of a light emitting diode causes a problem, select a switch without an indicator light (Model D-A90).

<Solid state switch>

3) Generally, the internal voltage drop will be greater with a 2-wire solid state auto switch than with a reed switch. Take the same precautions as in 1).
   Also, note that a 12 VDC relay is not applicable.

Series MGG/MGC
Auto Switches Precautions 2

Be sure to read this before handling.

Design and Selection

⚠Caution

3. Pay attention to leakage current.

<Solid state switch>

With a 2-wire solid state auto switch, current (leakage current) flows to the load to operate the internal circuit even when in the OFF state.

Operating current of load (OFF condition) > Leakage current

If the criteria given in the above formula are not met, it will not reset correctly (stays ON). Use a 3-wire switch if this specification will not be satisfied.

Moreover, leakage current flow to the load will be “n” times larger when “n” auto switches are connected in parallel. Refer to SMC's “Best Pneumatics” catalogue.

4. Ensure sufficient clearance for maintenance activities.

When designing an application, be sure to allow sufficient clearance for maintenance and inspections.

Mounting and Adjustment

⚠Warning

1. Instruction manual

Install the products and operate them only after reading the instruction manual carefully and understanding its contents. Also keep the manual where it can be referred to as necessary.

2. Do not drop or bump.

Do not drop, bump or apply excessive impacts (300 m/s² or more for reed switches and 1000 m/s² or more for solid state switches) while handling. Although the body of the switch may not be damaged, the inside of the switch could be damaged and cause a malfunction.

3. Mount switches using the proper fastening torque.

When a switch is tightened beyond the range of fastening torque, the mounting screws, mounting bracket or switch may be damaged. On the other hand, tightening below the range of fastening torque may allow the switch to slip out of position. (For mounting and moving auto switches, tightening torque, etc., refer to each series.)

4. Mount a switch at the center of the operating range.

Adjust the mounting position of an auto switch so that the piston stops at the center of the operating range (the range in which a switch is ON). (The mounting position shown in a catalogue indicates the optimum position at stroke end.) If mounted at the end of the operating range (around the borderline of ON and OFF), operation will be unstable or the service life will be shortened.

<D-M9□>

When the D-M9□ auto switch is used to replace old series auto switch, it may not activate depending on operating condition because of its shorter operating range.

Such as

- **Application where the stop position of actuator may vary and exceed the operating range of the auto switch, for example, pushing, pressing, clamping operation, etc.**
- **Application where the auto switch is used for detecting an intermediate stop position of the actuator. (In this case the detecting time will be reduced.)**

In these applications, set the auto switch to the center of the required detecting range.

Mounting and Adjustment

⚠Caution

1. Do not carry an actuator by the auto switch lead wires.

Never carry a cylinder (actuator) by its lead wires. This may not only cause broken lead wires, but it may cause internal elements of the switch to be damaged by the stress.

2. Fix the switch with appropriate screw installed on the switch body. If using other screws, switch may be damaged.

Wiring

⚠Warning

1. Confirm proper insulation of wiring.

Be certain that there is no faulty wiring insulation (contact with other circuits, ground fault, improper insulation between terminals, etc.). Damage may occur due to excess current flow into a switch.

2. Do not wire with power lines or high voltage lines.

Wire separately from power lines or high voltage lines, avoiding parallel wiring or wiring in the same conduit with these lines. Control circuits, including auto switches, may malfunction due to noise from these other lines.

⚠Caution

1. Avoid repeatedly bending or stretching lead wires.

Repeated bending or tensile force applied to the lead wire may cause the sheath to fall off or disconnection of the wire.

If bending or tensile force are not avoidable, fix the lead wire close to the switch and allow a bend radius of R40 to 80 mm or larger. Please consult SMC for details. Stress and tensile force applied to the connection between the cable and switch increases the possibility of disconnection.

Fix the cable in the middle so that it is not movable in the area where it connects with the switch.

2. Be sure to connect the load before power is applied.

<2-wire type>

If the power is turned ON when an auto switch is not connected to a load, the switch will be instantly damaged because of excess current.

It is the same as when the 2-wire brown cord (+, output) is directly connected to the (+) power supply terminal.

Back page 3

Series MGG/MGC
Auto Switches Precautions 3

Be sure to read this before handling.

Wiring

⚠Caution

3. Do not allow short circuit of loads.

<Reed switch>

If the power is turned ON with a load in a short circuited condition, the switch will be instantly damaged because of excess current flow into the switch.

<Solid state switch>

Model D-M9□ and all models of PNP output type switches do not have built-in short circuit prevention circuits. If loads are short circuited, the switches will be instantly damaged, as in the case of reed switches.

Take special care to avoid reverse wiring with the power supply line (brown) and the output line (black) on 3-wire type switches.

4. Avoid incorrect wiring.

<Reed switch>

A 24 VDC switch with indicator light has polarity. The brown lead wire is (+) and the blue lead wire is (–).

1) If connections are reversed, a switch will operate, however, the light emitting diode will not light up.
Also note that a current greater than that specified will damage a light emitting diode and it will no longer operate.
Applicable models:
D-A93, C73C

<Solid state switch>

1) If connections are reversed on a 2-wire type switch, the switch will not be damaged if protected by a protection circuit, but the switch will always stay in an ON state. However, it is still necessary to avoid reversed connections, since the switch could be damaged by a load short circuit in this condition.
2) If connections are reversed (power supply line + and power supply line –) on a 3-wire type switch, the switch will be protected by a protection circuit. However, if the power supply line (+) is connected to the blue wire and the power supply line (–) is connected to the black wire, the switch will be damaged.

<D-M9□>

D-M9□ does not have built-in short circuit protection circuit. Be aware that if the power supply connection is reversed (e.g. (+) power supply wire and (–) power supply wire connection is reversed), the switch will be damaged.

5. When the cable sheath is stripped, confirm the stripping direction. The insulator may be split or damaged depending on the direction. (D-M9□, M9□W only)

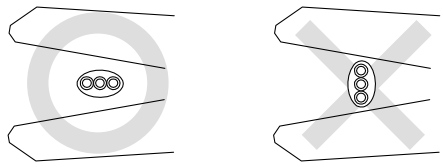

Recommended Tool

Model name	Model no.
Wire stripper	D-M9N-SWY

∗ Stripper for a round cable (ø2.0) can be used for a 2-wire type cable.

Operating Environment

⚠Warning

1. Never use in an atmosphere of explosive gases.

The construction of auto switches is not intended to prevent explosion. Never use in an atmosphere with an explosive gas since this may cause a serious explosion.

2. Do not use in an area where a magnetic field is generated.

Auto switches will malfunction or magnets inside actuators will become demagnetised.

3. Do not use in an environment where the auto switch will be in water or continually exposed to water.

Although switches satisfy IEC standard IP67 construction (JIS C 0920: waterproof construction), do not use switches in applications where continually exposed to water splash or spray. Poor insulation or swelling of the potting resin inside switches may cause malfunction.

4. Do not use in an environment with oil or chemicals.

Please consult SMC if auto switches will be used in an environment with coolant, cleaning solvent, various oils or chemicals. If auto switches are used under these conditions for even a short time, they may be adversely affected by improper insulation, malfunction due to swelling of the potting resin, or hardening of the lead wires.

5. Do not use in an environment with temperature cycles.

Please consult SMC if switches are used where there are temperature cycles other than normal temperature changes, as they may be adversely affected internally.

6. Do not use in an environment where there is excessive impact shock.

<Reed switch>

When excessive impact (300 m/s^2 or more) is applied to a reed switch during operation, the contact point will malfunction and generate or cut off a signal momentarily (1 ms or less). Please consult SMC regarding the need to use a solid state switch depending upon the environment.

7. Do not use in an area where surges are generated.

<Solid state switch>

When there are units (solenoid type lifter, high frequency induction furnace, motor, radio equipment etc.) which generate large surges or electromagnetic waves in the area around actuators with solid state auto switches, this may cause deterioration or damage to the switches. Avoid sources of surge generation and crossed lines.

Series MGG/MGC
Auto Switches Precautions 4

Be sure to read this before handling.

Operating Environment

⚠Caution

1. Avoid accumulation of iron debris or close contact with magnetic substances.

When a large amount of ferrous debris such as machining chips or spatter is accumulated, or a magnetic substance (something attracted by a magnet) is brought into close proximity with an auto switch actuator, it may cause the auto switch to malfunction due to a loss of the magnetic force inside the actuator.

2. Please consult SMC concerning water resistance, elasticity of lead wires, usage at welding sites, etc.

3. Do not use in direct sunlight.

4. Do not mount the product in locations where it is exposed to radiant heat.

Maintenance

⚠Warning

1. Perform the following maintenance periodically in order to prevent possible danger due to unexpected auto switch malfunction.

1) Securely tighten switch mounting screws.
If screws become loose or the mounting position is dislocated, retighten them after readjusting the mounting position.

2) Confirm that there is no damage to lead wires.
To prevent faulty insulation, replace switches or repair lead wires, etc., if damage is discovered.

3) Confirm the lighting of the green light on the 2-colour indicator type switch.
Confirm that the green LED is turned on when stopped at the established position. If the red LED is turned on, the mounting position is not appropriate. Readjust the mounting position until the green LED lights up.

2. Maintenance procedures are outlined in the operation manual.

Not following proper procedures could cause the product to malfunction and could lead to damage to the equipment or machine.

3. Removal of equipment, and supply/exhaust of compressed air

Before any machinery or equipment is removed, first ensure that the appropriate measures are in place to prevent the fall or erratic movement of driven objects and equipment, then cut off the electric power and reduce the pressure in the system to zero. Only then should you proceed with the removal of any machinery and equipment.
When machinery is restarted, proceed with caution after confirming that appropriate measures are in place to prevent actuators from sudden movement.

Back page 5

⚠ Safety Instructions

These safety instructions are intended to prevent hazardous situations and/or equipment damage. These instructions indicate the level of potential hazard with the labels of **"Caution," "Warning"** or **"Danger."** They are all important notes for safety and must be followed in addition to International Standards (ISO/IEC) [1)], and other safety regulations.

⚠ **Danger:**	**Danger** indicates a hazard with a high level of risk which, if not avoided, will result in death or serious injury.
⚠ **Warning:**	**Warning** indicates a hazard with a medium level of risk which, if not avoided, could result in death or serious injury.
⚠ **Caution:**	**Caution** indicates a hazard with a low level of risk which, if not avoided, could result in minor or moderate injury.

1) ISO 4414: Pneumatic fluid power – General rules and safety requirements for systems and their components.
ISO 4413: Hydraulic fluid power – General rules and safety requirements for systems and their components.
IEC 60204-1: Safety of machinery – Electrical equipment of machines. (Part 1: General requirements)
ISO 10218-1: Robots and robotic devices - Safety requirements for industrial robots - Part 1: Robots.
etc.

⚠ Warning

1. The compatibility of the product is the responsibility of the person who designs the equipment or decides its specifications.
Since the product specified here is used under various operating conditions, its compatibility with specific equipment must be decided by the person who designs the equipment or decides its specifications based on necessary analysis and test results. The expected performance and safety assurance of the equipment will be the responsibility of the person who has determined its compatibility with the product. This person should also continuously review all specifications of the product referring to its latest catalogue information, with a view to giving due consideration to any possibility of equipment failure when configuring the equipment.

2. Only personnel with appropriate training should operate machinery and equipment.
The product specified here may become unsafe if handled incorrectly. The assembly, operation and maintenance of machines or equipment including our products must be performed by an operator who is appropriately trained and experienced.

3. Do not service or attempt to remove product and machinery/ equipment until safety is confirmed.
1. The inspection and maintenance of machinery/equipment should only be performed after measures to prevent falling or runaway of the driven objects have been confirmed.
2. When the product is to be removed, confirm that the safety measures as mentioned above are implemented and the power from any appropriate source is cut, and read and understand the specific product precautions of all relevant products carefully.
3. Before machinery/equipment is restarted, take measures to prevent unexpected operation and malfunction.

4. SMC products cannot be used beyond their specifications.
They are not developed, designed, and manufactured to be used under the following conditions or environments.
Use under such conditions or environments is not allowed.
1. Conditions and environments outside of the given specifications, or use outdoors or in a place exposed to direct sunlight.
2. Use for nuclear power, railways, aviation, space equipment, ships, vehicles, military application, equipment affecting human life, body, and property, combustion equipment, entertainment equipment, emergency shut-off circuits, press clutches, brake circuits, safety equipment, etc., and use for applications that do not conform to standard specifications such as catalogues and operation manuals.
3. Use for interlock circuits, except for use with double interlock such as installing a mechanical protection function in case of failure. Please periodically inspect the product to confirm that the product is operating properly.

⚠ Caution

SMC develops, designs, and manufactures products to be used for automatic control equipment, and provides them for peaceful use in manufacturing industries.
Use in non-manufacturing industries is not allowed.
Products SMC manufactures and sells cannot be used for the purpose of transactions or certification specified in the Measurement Act of each country.
The new Measurement Act prohibits use of any unit other than SI units in Japan.

Limited warranty and Disclaimer/Compliance Requirements

The product used is subject to the following "Limited warranty and Disclaimer" and "Compliance Requirements".Read and accept them before using the product.

Limited warranty and Disclaimer

1. The warranty period of the product is 1 year in service or 1.5 years after the product is delivered, whichever is first. [2)] Also, the product may have specified durability, running distance or replacement parts. Please consult your nearest sales branch.
2. For any failure or damage reported within the warranty period which is clearly our responsibility, a replacement product or necessary parts will be provided. This limited warranty applies only to our product independently, and not to any other damage incurred due to the failure of the product.
3. Prior to using SMC products, please read and understand the warranty terms and disclaimers noted in the specified catalogue for the particular products.

2) **Suction cups (Vacuum pads) are excluded from this 1 year warranty.**
A suction cup (vacuum pad) is a consumable part, so it is warranted for a year after it is delivered. Also, even within the warranty period, the wear of a product due to the use of the suction cup (vacuum pad) or failure due to the deterioration of rubber material are not allowed by the limited warranty.

Compliance Requirements

1. The use of SMC products with production equipment for the manufacture of weapons of mass destruction (WMD) or any other weapon is strictly prohibited.
2. The exports of SMC products or technology from one country to another are governed by the relevant security laws and regulations of the countries involved in the transaction. Prior to the shipment of a SMC product to another country, assure that all local rules governing that export are known and followed.

⚠ **Safety Instructions**	Be sure to read the "Handling Precautions for SMC Products" (M-E03-3) and "Operation Manual" before use.

SMC Corporation (Europe)

Austria	+43 (0)2262622800	www.smc.at	office.at@smc.com
Belgium	+32 (0)33551464	www.smc.be	info@smc.be
Bulgaria	+359 (0)2807670	www.smc.bg	sales.bg@smc.com
Croatia	+385 (0)13707288	www.smc.hr	sales.hr@smc.com
Czech Republic	+420 541424611	www.smc.cz	office.at@smc.com
Denmark	+45 70252900	www.smcdk.com	smc.dk@smc.com
Estonia	+372 651 0370	www.smcee.ee	info.ee@smc.com
Finland	+358 207513513	www.smc.fi	smc.fi@smc.com
France	+33 (0)164761000	www.smc-france.fr	supportclient.fr@smc.com
Germany	+49 (0)61034020	www.smc.de	info.de@smc.com
Greece	+30 210 2717265	www.smchellas.gr	sales@smchellas.gr
Hungary	+36 23513000	www.smc.hu	office.hu@smc.com
Ireland	+353 (0)14039000	www.smcautomation.ie	technical.ie@smc.com
Italy	+39 03990691	www.smcitalia.it	mailbox.it@smc.com
Latvia	+371 67817700	www.smc.lv	info.lv@smc.com
Lithuania	+370 5 2308118	www.smclt.lt	info.lt@smc.com
Netherlands	+31 (0)205318888	www.smc.nl	info@smc.nl
Norway	+47 67129020	www.smc-norge.no	post.no@smc.com
Poland	+48 22 344 40 00	www.smc.pl	office.pl@smc.com
Portugal	+351 214724500	www.smc.eu	apoiocliente.pt@smc.com
Romania	+40 213205111	www.smcromania.ro	office.ro@smc.com
Russia	+7 (812)3036600	www.smc.eu	sales@smcru.com
Slovakia	+421 (0)413213212	www.smc.sk	sales.sk@smc.com
Slovenia	+386 (0)73885412	www.smc.si	office.si@smc.com
Spain	+34 945184100	www.smc.eu	post.es@smc.com
Sweden	+46 (0)86031240	www.smc.nu	order.se@smc.com
Switzerland	+41 (0)523963131	www.smc.ch	helpcenter.ch@smc.com
Turkey	+90 212 489 0 440	www.smcturkey.com.tr	satis.tr@smc.com
UK	+44 (0)845 121 5122	www.smc.uk	sales.gb@smc.com
South Africa	+27 10 900 1233	www.smcza.co.za	Sales.za@smc.com

Printing ES 00 Printed in Spain

Specifications are subject to change without prior notice and any obligation on the part of the manufacturer