Basic Pad *ZP Series*

RoHS

Ø 2, Ø 4, Ø 6, Ø 8, Ø 10, Ø 13, Ø 16, Ø 20, Ø 25, Ø 32, Ø 40, Ø 50

Flat Type, Flat Type with Ribs, Bellows Type, Thin Flat Type, Thin Flat Type with Ribs, Deep Type

12 sizes, 6 types of pad forms, and a wide range of adapter variations

Pad form	Application
Flat type	For workpieces with flat and undeformed surfaces
Flat type with ribs	For workpieces which are easily deformed Workpieces can be removed easily thanks to the ribs.
Bellows type	For use where there is no space for a buffer or for workpieces with inclined surfaces
Thin flat type	For soft workpieces such as thin sheets or vinyl Wrinkling or deformation during adsorption can be reduced.
Thin flat type with ribs	For soft workpieces such as thin sheets or vinyl Workpieces can be removed easily thanks to the ribs.
Deep type	For workpieces with curved surfaces or for spherical workpieces

Mounting bracket	Application
Ball joint	For workpieces with inclined or curved surfaces
With adapter	The adapter can be selected according to the installation conditions.
With buffer	For workpieces of varying heights The buffer can reduce the impact to the workpiece during adsorption.

CONTENTS

Basic Pad *ZP Series*

Variations ..... p. 2
Specifications ..... p. 4

Flat Type
· How to Order ..... p. 6
· Dimensions/Models ..... p. 7

Flat Type with Ribs
· How to Order ..... p. 26
· Dimensions/Models ..... p. 27

Flat, Ball Joint Type
· How to Order ..... p. 38
· Dimensions/Models ..... p. 39

Bellows Type
· How to Order ..... p. 44
· Dimensions/Models ..... p. 45

Thin Flat Type
· How to Order ..... p. 64
· Dimensions/Models ..... p. 65

Thin Flat Type with Ribs
· How to Order ..... p. 73
· Dimensions/Models ..... p. 74

Deep Type
· How to Order ..... p. 82
· Dimensions/Models ..... p. 83

Construction ..... p. 94
(Flat type/Flat type with ribs/Bellows type/Thin flat type/Thin flat type with ribs/Deep type)
Construction ..... p. 119
(Flat, Ball joint type)
Mounting Bracket Assembly ..... p. 100
(Flat type/Flat type with ribs/Bellows type/Thin flat type/Thin flat type with ribs/Deep type)
Mounting Bracket Assembly ..... p. 106
(Flat, Ball joint type)

Specific Product Precautions ..... p. 110

Variations

Vacuum inlet direction		Vacuum inlet direction	Flat type	Flat type with ribs	Bellows type	Thin flat type	Thin flat type with ribs	Deep type
Vacuum inlet direction	Single unit		p. 32	p. 51	p. 68	p. 87	p. 96	p. 105
Vertical ▲	ZPT With adapter	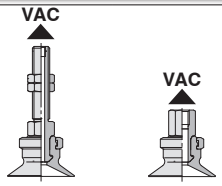	p. 33 p. 34	p. 51 p. 52	p. 69 p. 70	p. 87	p. 96	p. 105 p. 106
Lateral ▶	ZPR With adapter	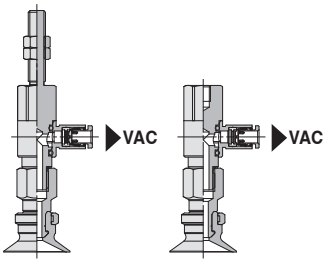	p. 35 p. 37	p. 53 p. 54	p. 71 p. 73	p. 88 p. 89	p. 97 p. 98	p. 107 p. 108
Lateral ▶	ZPY With adapter	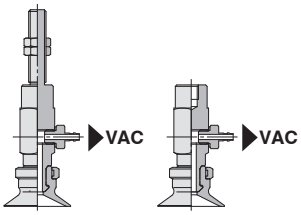	p. 39 p. 41	p. 55 p. 56	p. 75 p. 77	p. 90 p. 91	p. 99 p. 100	p. 109 p. 110
Vertical ▲	ZPT With buffer	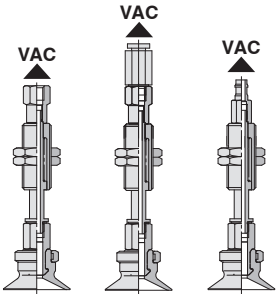	p. 43	p. 57	p. 79	p. 92	p. 101	p. 111
Lateral ▶	ZPR With buffer	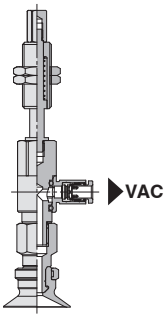	p. 46	p. 59	p. 82	p. 93	p. 102	p. 113
Lateral ▶	ZPY With buffer	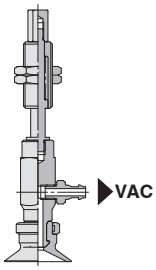	p. 48	p. 60	p. 84	p. 94	p. 103	p. 114

Ball Joint Type

Vacuum inlet direction		Vacuum inlet direction	Flat type
Vacuum inlet direction	Single unit	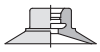	p. 62
Vertical	ZPT With adapter	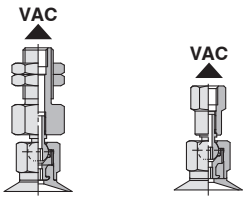	p. 62 p. 63
Lateral	ZPR With adapter	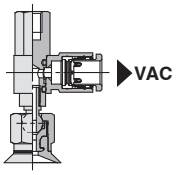	p. 64
Vertical	ZPT With buffer	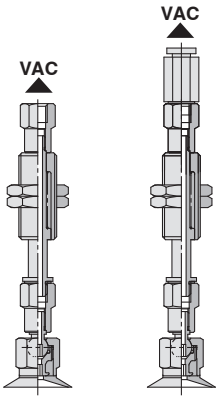	p. 65
Lateral	ZPR With buffer	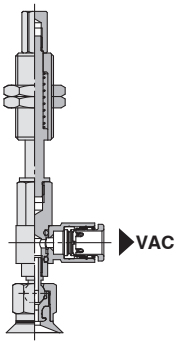	p. 66

Basic Pad *ZP Series*
Specifications

Pad Material

Material	NBR (Nitrile rubber)	Silicone rubber*1*2	Urethane rubber	FKM (Fluoro rubber)	Conductive NBR (Nitrile rubber)	Conductive silicone rubber
Colour of rubber	Black	White	Brown	Black		
Rubber hardness (Shore A: ±5°)	50	40	50 to 60	60	50 to 70	50 to 60

*1 Uses a material compliant with a dissolution test of the FDA (U.S. Food and Drug Administration) regulation 21CFR§177.2600 for "Rubber articles intended for repeated use."
*2 Uses a material compliant with the standards for "Rubber apparatus (excluding baby drinking apparatus) and containers/packaging" (D3) (Partial revision: Japanese Ministry of Health, Labour, and Welfare Notification No. 595, 2012) in Section 3 "Apparatus and Containers/Packaging" of the Japan Food Sanitation Act, Article 18 "Specifications and Standards for Food and Food Additives, etc." (Japanese Ministry of Health and Welfare Notification No. 370, 1959)

Adapter Specifications

Vertical

Vacuum Inlet Direction Vertical T Type/ZPT

Connection		Male thread							Female thread			
Pad diameter		Ø 2 to Ø 8	Ø 10 to Ø 16		Ø 20 to Ø 32		Ø 40, Ø 50		Ø 2 to Ø 8*1	Ø 10 to Ø 16	Ø 20 to Ø 32	Ø 40, Ø 50
Connection thread		M5 x 0.8 M6 x 1	M5 x 0.8 M6 x 1	M5 x 0.8 M6 x 1 G1/8	M5 x 0.8 M6 x 1 M8 x 1	M5 x 0.8 M6 x 1 G1/8	M6 x 1 M8 x 1	M6 x 1 G1/4	M4 x 0.7 M5 x 0.8	M5 x 0.8 M6 x 1 G1/8 1/8 (Rc, NPT, NPTF)	M5 x 0.8 M6 x 1 M8 x 1.25 G1/8 1/8 (Rc, NPT, NPTF)	M6 x 1 M8 x 1.25 G1/4 1/8 (Rc, NPT, NPTF)
Vacuum inlet	Female thread	Use the connection thread.	M3 x 0.5	Use the connection thread.	M3 x 0.5 M5 x 0.8	Use the connection thread.	M3 x 0.5 M5 x 0.8	Use the connection thread.	Use the connection thread.			

*1 Refer to Ø 2 to Ø 8 for the thin flat type and thin flat type with ribs.

Lateral

Vacuum Inlet Direction Lateral R Type/ZPR

Connection		Male thread			Female thread			
Pad diameter		Ø 2 to Ø 16	Ø 20 to Ø 32	Ø 40, Ø 50	Ø 2 to Ø 8*1	Ø 10 to Ø 16	Ø 20 to Ø 32	Ø 40, Ø 50
Connection thread		M5 x 0.8 M6 x 1	M6 x 1 M8 x 1		M4 x 0.7 M5 x 0.8	M5 x 0.8 M6 x 1	M5 x 0.8 M6 x 1 M8 x 1.25	M6 x 1 M8 x 1.25
Vacuum inlet	One-touch fitting	Ø 4, Ø 6	Ø 4, Ø 6, Ø 8	Ø 6, Ø 8	Ø 4, Ø 6		Ø 4, Ø 6, Ø 8	Ø 6, Ø 8

*1 Refer to Ø 2 to Ø 8 for the thin flat type and thin flat type with ribs.

Vacuum Inlet Direction Lateral Y Type/ZPY

Connection		Male thread			Female thread			
Pad diameter		Ø 2 to Ø 16	Ø 20 to Ø 32	Ø 40, Ø 50	Ø 2 to Ø 8*1	Ø 10 to Ø 16	Ø 20 to Ø 32	Ø 40, Ø 50
Connection thread		M5 x 0.8 M6 x 1	M6 x 1 M8 x 1		M4 x 0.7 M5 x 0.8	M5 x 0.8 M6 x 1	M5 x 0.8 M6 x 1 M8 x 1.25	M6 x 1 M8 x 1.25
Vacuum inlet	Barb fitting*2	Ø 4, Ø 6		Ø 6	Ø 4, Ø 6			Ø 6

*1 Refer to Ø 2 to Ø 8 for the thin flat type and thin flat type with ribs.
*2 Applicable tubing: Nylon tubing, Soft tubing

Buffer Specifications

Vertical
Lateral

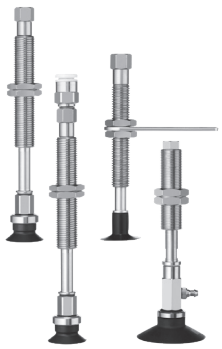

Pad diameter		Ø 2 to Ø 8*1	Ø 10 to Ø 32	Ø 40, Ø 50
Non-rotating specification		J: Rotating, K: Non-rotating		
Stroke [mm]		6, 10, 15, 25	10, 20, 30, 40, 50	10, 20, 30, 50
Connection thread		M8 x 1	M10 x 1	M14 x 1
Spring reactive force [N]	At 0 stroke	0.8	1.0	2.0
	At full stroke	1.2	3.0	5.0

*1 Refer to Ø 2 to Ø 8 for the thin flat type and thin flat type with ribs.

Specifications

Adapter Specifications (Ball Joint Type)

Ball joint rotating angle	30°

Vacuum Inlet Direction Vertical T Type/ZPT□F

Vertical

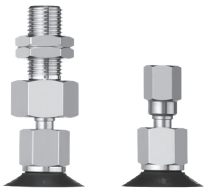

Connection	Male thread			Female thread		
Pad diameter	Ø 10 to Ø 16	Ø 20 to Ø 32	Ø 40, Ø 50	Ø 10 to Ø 16	Ø 20 to Ø 32	Ø 40, Ø 50
Connection thread	M8 x 1	M10 x 1	M14 x 1	M5 x 0.8	M5 x 0.8 M8 x 1.25 1/8 (Rc, NPT, NPTF)	M8 x 1.25 1/8 (Rc, NPT, NPTF)
Vacuum inlet	M5 x 0.8			Use the connection thread.		

Vacuum Inlet Direction Lateral R Type/ZPR□F

Lateral

Connection		Female thread		
Pad diameter		Ø 10 to Ø 16	Ø 20 to Ø 32	Ø 40, Ø 50
Connection thread		M5 x 0.8	M5 x 0.8 M8 x 1.25	M5 x 0.8 M8 x 1.25
Vacuum inlet	One-touch fitting	Ø 4, Ø 6	Ø 6, Ø 8	Ø 6, Ø 8

Buffer Specifications (Ball Joint Type)

Vertical Lateral

Pad diameter		Ø 10 to Ø 16	Ø 20 to Ø 50
Non-rotating specification		J: Rotating, K: Non-rotating	
Stroke [mm]		10, 20, 30, 40, 50	10, 20, 30, 50
Connection thread		M10 x 1	M14 x 1
Spring reactive force [N]	At 0 stroke	1.0	2.0
	At full stroke	3.0	5.0

Basic Pad

Flat Type

ZP Series

How to Order

		Dimensions/ Models	Construction	Mounting Bracket Assembly
Pad unit	ZP□ 02 U N – □	p. 7	p. 94 p. 96	p. 100
With adapter	ZP□ T 02 U N – A5 – □	From p. 8	p. 94 p. 96	p. 100
With buffer	ZP T 02 U N J 6 – B3 – A8	From p. 19	p. 95 p. 97	From p. 103

❶ ❷ ❸ ❹ ❺ ❻ ❼ ❽ ❾

● Flat type

∗ Pad unit's sales unit: 10 pcs. (Pad diameter: Ø 20 mm or less)

❶ Adapter (Lock ring) material

—	Brass
S∗1	Stainless steel (Stainless steel 304)

∗1 Only applicable to the pad unit (with lock ring) and the pad with adapter (Vacuum inlet direction: Vertical (Option "T"))

❷ Vacuum inlet direction

—	Pad unit
T	Vertical
R	Lateral (With One-touch fitting)
Y	Lateral (With barb fitting)

❸ Pad diameter

02	Ø 2	16	Ø 16
04	Ø 4	20	Ø 20
06	Ø 6	25	Ø 25
08	Ø 8	32	Ø 32
10	Ø 10	40	Ø 40
13	Ø 13	50	Ø 50

❹ Material

N	NBR
S	Silicone rubber∗1 ∗2
U	Urethane rubber
F	FKM
GN	Conductive NBR
GS	Conductive silicone rubber

∗1 Uses a material compliant with a dissolution test of the FDA (U.S. Food and Drug Administration) regulation 21CFR§177.2600 for "Rubber articles intended for repeated use."

∗2 Uses a material compliant with the standards for "Rubber apparatus (excluding baby drinking apparatus) and containers/packaging" (D3) (Partial revision: Japanese Ministry of Health, Labour, and Welfare Notification No. 595, 2012) in Section 3 "Apparatus and Containers/Packaging" of the Japan Food Sanitation Act, Article 18 "Specifications and Standards for Food and Food Additives, etc." (Japanese Ministry of Health and Welfare Notification No. 370, 1959)

❺ Buffer specification

J	Rotating
K	Non-rotating
JN∗1	Rotating (Without buffer plate)
KN∗1	Non-rotating (Without buffer plate)

∗1 Only for pad diameters Ø 2 to Ø 8

❻ Buffer stroke

Stroke [mm]	Pad diameter [mm]											
	Ø 2	Ø 4	Ø 6	Ø 8	Ø 10	Ø 13	Ø 16	Ø 20	Ø 25	Ø 32	Ø 40	Ø 50
6	●	●	●	●	—	—	—	—	—	—	—	—
10	●	●	●	●	●	●	●	●	●	●	●	●
15	●	●	●	●	—	—	—	—	—	—	—	—
20	—	—	—	—	●	●	●	●	●	●	●	●
25	●	●	●	●	—	—	—	—	—	—	—	—
30	—	—	—	—	●	●	●	●	●	●	●	●
40	—	—	—	—	●	●	●	●	●	●	—	—
50	—	—	—	—	●	●	●	●	●	●	●	●

With adapter

❼ Vacuum inlet

○: ZP□T/Vertical ●: ZPR/Lateral (With One-touch fitting) △: ZPY/Lateral (With barb fitting)

Type	Symbol	Size	Pad diameter [mm]			
			Ø 2 to Ø 8	Ø 10 to Ø 16	Ø 20 to Ø 32	Ø 40, Ø 50
Male thread	A5	M5 x 0.8	○∗1	—	—	—
	AS5		—	○∗1	○∗1	—
	A6	M6 x 1	○∗1	—	—	—
	AS6		—	○∗1	○∗1	○∗1
	AG01	G1/8	—	○∗1	○∗1	—
	AG02	G1/4	—	—	—	○∗1
Female thread	—	M3 x 0.5	—	○ (❽ Connection thread: A5/A6)	○ (❽ Connection thread: A6)	○ (❽ Connection thread: A6)
		M5 x 0.8	—	—	○ (❽ Connection thread: A8)	○ (❽ Connection thread: A8)
	B4	M4 x 0.7	○∗1	—	—	—
	B5	M5 x 0.8	○∗1	○∗1	○∗1	—
	B6	M6 x 1	—	○∗1	○∗1	○∗1
	B8	M8 x 1.25	—	—	○∗1	○∗1
	BG01	G1/8	—	○∗1	○∗1	—
	BG02	G1/4	—	—	—	○∗1
	B01	Rc1/8	—	○∗1	○∗1	○∗1
	N01∗4	NPT1/8	—	○∗1	○∗1	○∗1
	T01∗4	NPTF1/8	—	○∗1	○∗1	○∗1
One-touch fitting	04	Ø 4	●	●	●	—
	06	Ø 6	●	●	●	●
	08	Ø 8	—	—	●	●
Barb fitting	N4	For Ø 4 nylon tubing∗2	△	△	△	—
	N6	For Ø 6 nylon tubing∗2	△	△	△	△
	U4	For Ø 4 soft tubing∗3	△	△	△	—
	U6	For Ø 6 soft tubing∗3	△	△	△	△

∗1 Use the connection thread. ∗2 Nylon tube piping ∗3 Soft nylon/Polyurethane tube piping ∗4 Not compatible with stainless steel materials

❽ Connection thread

○: ZP□T/Vertical ●: ZPR/Lateral (With One-touch fitting) △: ZPY/Lateral (With barb fitting)

Type	Symbol	Size	Pad diameter [mm]			
			Ø 2 to Ø 8	Ø 10 to Ø 16	Ø 20 to Ø 32	Ø 40, Ø 50
Male thread∗1	A5	M5 x 0.8	●△	○∗2●△	—	—
	A6	M6 x 1	●△	○∗2●△	○∗2●△	○∗2●△
	A8	M8 x 1	—	—	○∗2●△	○∗2●△
Female thread	B4	M4 x 0.7	●△	—	—	—
	B5	M5 x 0.8	●△	●△	●△	—
	B6	M6 x 1	—	●△	●△	●△
	B8	M8 x 1.25	—	—	●△	●△

∗1 The mounting nut is shipped together with the product (unassembled). ∗2 ○: ZP□T/Vertical comes with a vacuum inlet (female thread).

With buffer

❼ Vacuum inlet

○: ZPT/Vertical ●: ZPR/Lateral (With One-touch fitting) △: ZPY/Lateral (With barb fitting)

Type	Symbol	Size	Pad diameter [mm]			
			Ø 2 to Ø 8	Ø 10 to Ø 16	Ø 20 to Ø 32	Ø 40, Ø 50
Female thread	B3	M3 x 0.5	○	—	—	—
	B5	M5 x 0.8	○	○	○	○
	B01	Rc1/8	—	—	—	○
	N01	NPT1/8	—	—	—	○
	T01	NPTF1/8	—	—	—	○
One-touch fitting	04	Ø 4	○●	○●	○●	—
	06	Ø 6	○●	○●	○●	○●
	08	Ø 8	—	—	●	○●
Barb fitting	N4	For Ø 4 nylon tubing∗1	○△	△	△	—
	N6	For Ø 6 nylon tubing∗1	△	○△	○△	○△
	U4	For Ø 4 soft tubing∗2	○△	△	△	—
	U6	For Ø 6 soft tubing∗2	△	○△	○△	○△

∗1 Nylon tube piping ∗2 Soft nylon/Polyurethane tube piping

❽ Connection thread

○: ZPT/Vertical ●: ZPR/Lateral (With One-touch fitting) △: ZPY/Lateral (With barb fitting)

Type	Symbol	Size	Pad diameter [mm]			
			Ø 2 to Ø 8	Ø 10 to Ø 16	Ø 20 to Ø 32	Ø 40, Ø 50
Male thread∗1	A8	M8 x 1	○●△	—	—	—
	A10	M10 x 1	—	○●△	○●△	—
	A14	M14 x 1	—	—	—	○●△

∗1 The mounting nut, buffer plate, and ○: ZPT/Vertical buffer are shipped together with the product (unassembled).

❾ Lock ring

Symbol	Pad diameter [mm]	
	Ø 2 to Ø 8	Ø 10 to Ø 50
—	None∗1	With lock ring
X19		Without lock ring

∗1 The lock ring cannot be used for pad diameters Ø 2 to Ø 8.

Lock ring unit

Part no.	Pad diameter [mm]
ZP□L1	Ø 10 to Ø 16
ZP□L2	Ø 20 to Ø 32
ZP□L3	Ø 40, Ø 50

□: —/Brass S/Stainless steel

∗ The pad unit lock ring is shipped together with the product (unassembled).

Dimensions/Models

Single unit Ø 2 to Ø 8

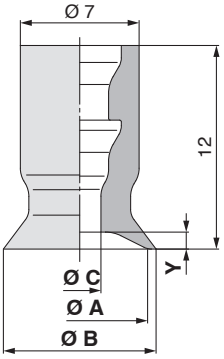

Construction p. 94
Mounting Bracket Assembly From p. 100

ZP 02 U N
❶ ❷

Model				A	B	C	Y
	❶ Pad dia.	Form	❷ *1 Material				
ZP	02	U	N S U F GN GS	2	2.6	1.2	0.5
	04			4	4.8	1.6	0.8
	06			6	7	2.5	
	08			8	9		1

*1 N: NBR, S: Silicone rubber, U: Urethane rubber, F: FKM, GN: Conductive NBR, GS: Conductive silicone rubber

Single unit Ø 10 to Ø 50

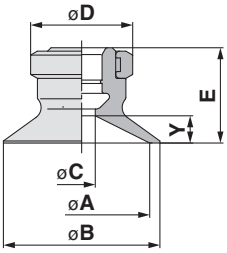

Construction p. 96
Mounting Bracket Assembly From p. 100

ZP □ 10 U N
❶ ❷ ❸

❶ Lock ring material

—	Brass
S	Stainless steel (Stainless steel 304)

Model					A	B	C	D	E	Y
	❶ Lock ring material	❷ Pad dia.	Form	❸ *1 Material						
ZP	— S	10	U	N S U F GN GS	10	12	4	13	12	3
		13			13	15				
		16			16	18			12.5	3.5
		20			20	23		15	14	4
		25			25	28				
		32			32	35			14.5	4.5
		40			40	43	7	18	18.5	6.5
		50			50	53			19.5	7.5

*1 N: NBR, S: Silicone rubber, U: Urethane rubber, F: FKM, GN: Conductive NBR, GS: Conductive silicone rubber

Dimensions/Models

With adapter Ø 2 to Ø 8

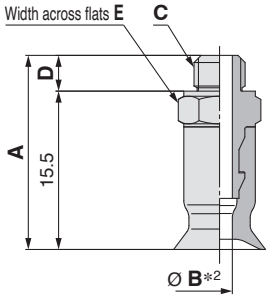

Construction	p. 94
Adapter Assembly	p. 100

ZP □ T 02 U N - A5
❶ ❷ ❸ ❹

❶ Adapter material

—	Brass
S	Stainless steel (Stainless steel 304)

❹ Vacuum inlet (Male thread)

A5	M5 x 0.8
A6	M6 x 1

Model							A	B*2	C	D	E
	❶ Adapter material	Vacuum inlet direction	❷ Pad dia.	Form	❸ Material*1	❹ Vacuum inlet					
ZP	— / S	T	02	U	N S U F GN GS	A5	19	1.2	M5 x 0.8	3.5	7
			04					1.6			
			06 08					2.5			
			02			A6	20	1.2	M6 x 1	4.5	8
			04					1.6			
			06 08					2.5			

*1 N: NBR, S: Silicone rubber, U: Urethane rubber, F: FKM, GN: Conductive NBR, GS: Conductive silicone rubber
*2 Indicates the minimum hole size of the adapter or vacuum pad

With adapter Ø 10 to Ø 50

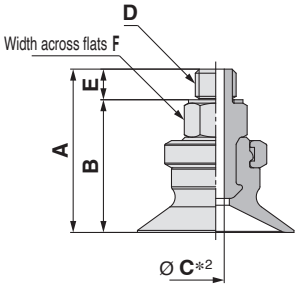

Construction	p. 96
Adapter Assembly	p. 100

ZP □ T 10 U N - AS5
❶ ❷ ❸ ❹

❶ Adapter (Lock ring) material

—	Brass
S	Stainless steel (Stainless steel 304)

❹ Vacuum inlet (Male thread)

AS5	M5 x 0.8
AS6	M6 x 1
AG01	G1/8
AG02	G1/4

Model							A	B	C*2	D	E	F
	❶ Adapter material	Vacuum inlet direction	❷ Pad dia.	Form	❸ Material*1	❹ Vacuum inlet						
ZP	— / S	T	10 13	U	N S U F GN GS	AS5	21	17.5	2.5	M5 x 0.8	3.5	8
			16				21.5	18				
			20 25				23	19.5				
			32				23.5	20				
			10 13			AS6	22	17.5	2.5	M6 x 1	4.5	8
			16				22.5	18				
			20 25				24	19.5				
			32				24.5	20				
			40				29.5	25				12
			50				30.5	26				
			10 13			AG01	30	24.5	2.5	G1/8	5.5	17
			16				30.5	25				
			20 25				32	26.5	4			
			32				32.5	27				
			40			AG02	39	32.5	7	G1/4	6.5	21
			50				40	33.5				

*1 N: NBR, S: Silicone rubber, U: Urethane rubber, F: FKM, GN: Conductive NBR, GS: Conductive silicone rubber
*2 Indicates the minimum hole size of the adapter or vacuum pad

Dimensions/Models

With adapter ∅10 to ∅50

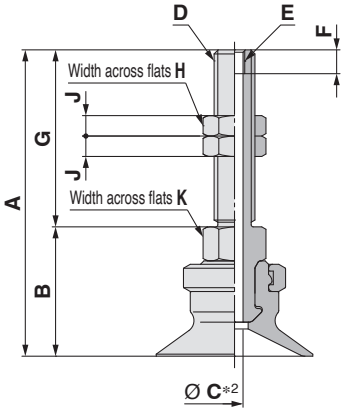

Construction	p. 96
Adapter Assembly	p. 100

ZP □ T 10 U N - A5
❶ ❷ ❸ ❹

❶ Adapter (Lock ring) material

—	Brass
S	Stainless steel (Stainless steel 304)

❹ Connection thread (Male thread)

A5	M5 x 0.8 (M3 x 0.5 With female thread)
A6	M6 x 1 (M3 x 0.5 With female thread)
A8	M8 x 1 (M5 x 0.8 With female thread)

Model							A	B	C*2	D	E	F	G	H	J	K
	❶ Adapter material	Vacuum inlet direction	❷ Pad dia.	Form	❸ Material *1	❹ Connection thread										
ZP	— / S	T	10, 13	U	N, S, U, F, GN, GS	A5	38	17	2.5	M5 x 0.8	M3 x 0.5	3.5	21	8	4	8
			16				38.5	17.5								
			10, 13			A6	43	17	2.5	M6 x 1	M3 x 0.5	3.5	26	8	4	8
			16				43.5	17.5								
			20, 25				45	19								
			32				45.5	19.5								
			40				50.5	24.5								12
			50				51.5	25.5								
			20, 25			A8	40	24	4	M8 x 1	M5 x 0.8	5	16	12	4	12
			32				40.5	24.5								
			40						4.2							
			50				41.5	25.5								

*1 N: NBR, S: Silicone rubber, U: Urethane rubber, F: FKM, GN: Conductive NBR, GS: Conductive silicone rubber
*2 Indicates the minimum hole size of the adapter or vacuum pad

Dimensions/Models

With adapter Ø 2 to Ø 8

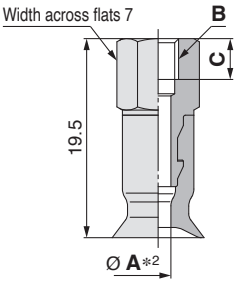

Construction	p. 94
Adapter Assembly	p. 100

ZP □ T 02 U N - B4
❶ ❷ ❸ ❹

❶ Adapter material

—	Brass
S	Stainless steel (Stainless steel 304)

❹ Vacuum inlet (Female thread)

B4	M4 x 0.7
B5	M5 x 0.8

Model								A*2	B	C
	❶ Adapter material	Vacuum inlet direction	❷ Pad dia.	Form	❸ *1 Material	❹ Vacuum inlet				
ZP	— S	T	02	U	N S U F GN GS	B4		1.2	M4 x 0.7	4
			04					1.6		
			06 08					2.5		
			02			B5		1.2	M5 x 0.8	5
			04					1.6		
			06 08					2.5		

*1 N: NBR, S: Silicone rubber, U: Urethane rubber, F: FKM, GN: Conductive NBR, GS: Conductive silicone rubber
*2 Indicates the minimum hole size of the adapter or vacuum pad

With adapter Ø 10 to Ø 50

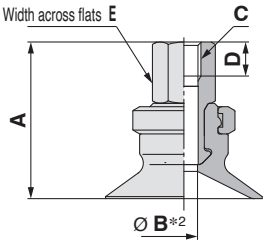

Construction	p. 96
Adapter Assembly	p. 100

ZP □ T 10 U N - B5
❶ ❷ ❸ ❹

❶ Adapter (Lock ring) material

—	Brass
S	Stainless steel (Stainless steel 304)

❹ Vacuum inlet (Female thread)

B5	M5 x 0.8	BG02	G1/4
B6	M6 x 1	B01	Rc1/8
B8	M8 x 1.25	N01*1	NPT1/8
BG01	G1/8	T01*1	NPTF1/8

*1 Not compatible with stainless steel materials

Model								A	B*2	C	D	E
	❶ Adapter material	Vacuum inlet direction	❷ Pad dia.	Form	❸ *1 Material	❹ Vacuum inlet						
ZP	— S	T	10 13	U	N S U F GN GS	B5		21	2.5	M5 x 0.8	5	8
			16					21.5				
			20 25					23	4			
			32					23.5				
			10 13			B6		21	2.5	M6 x 1	6	8
			16					21.5				
			20 25					23	4			
			32					23.5				
			40					32	4.9			12
			50					33				
			20 25			B8		29	3.5	M8 x 1.25	8	12
			32					29.5				
			40					32	6.6			
			50					33				
			10 13			BG01		27	2.5	G1/8	7.4	14
			16					27.5				
			20 25					29	4			
			32					29.5				
			40 50			BG02		38 39	7	G1/4	11	17
			10 13			B01 N01*3 T01*3		27	2.5	Rc1/8 NPT1/8 NPTF1/8	—	12
			16					27.5				
			20 25					29	3.5			
			32					29.5				
			40					32	7			
			50					33				

*1 N: NBR, S: Silicone rubber, U: Urethane rubber, F: FKM, GN: Conductive NBR, GS: Conductive silicone rubber
*2 Indicates the minimum hole size of the adapter or vacuum pad
*3 Not compatible with stainless steel materials

Dimensions/Models

With adapter/One-touch fitting Ø 2 to Ø 8

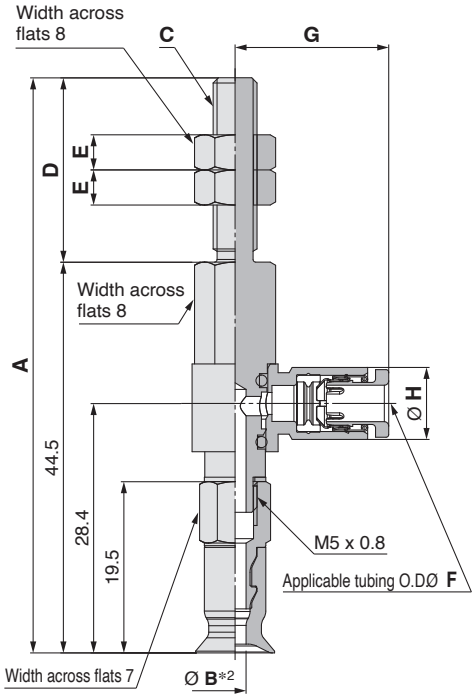

Construction p. 94
Adapter Assembly p. 101

ZPR 02 U N - 04 - A5

❶ ❷ ❸ ❹

❸ Vacuum inlet (One-touch fitting)

04	Ø 4
06	Ø 6

❹ Connection thread (Male thread)

A5	M5 x 0.8
A6	M6 x 1

Model							A	B*2	C	D	E
	Vacuum inlet direction	❶ Pad dia.	Form	❷ Material*1	❸ Vacuum inlet	❹ Connection thread					
ZP	R	02	U	N S U F GN GS	04 06	A5	65.5	1.2	M5 x 0.8	21	4
		04						1.6			
		06 08						2.5			
		02				A6	70.5	1.2	M6 x 1	26	4
		04						1.6			
		06 08						2.5			

Dimensions Per Vacuum Inlet

Model							F	G	H	Fitting part min. hole size
	Vacuum inlet direction	❶ Pad dia.	Form	❷ Material*1	❸ Vacuum inlet	❹ Connection thread				
ZP	R	02 04 06 08	U	N S U F GN GS	04	A5 A6	4	17.5	8.2	Ø 2.5
					06		6	18.3	10.4	Ø 4

*1 N: NBR, S: Silicone rubber, U: Urethane rubber, F: FKM, GN: Conductive NBR, GS: Conductive silicone rubber
*2 Indicates the minimum hole size of the adapter or vacuum pad

Dimensions/Models

With adapter/One-touch fitting Ø 10 to Ø 50

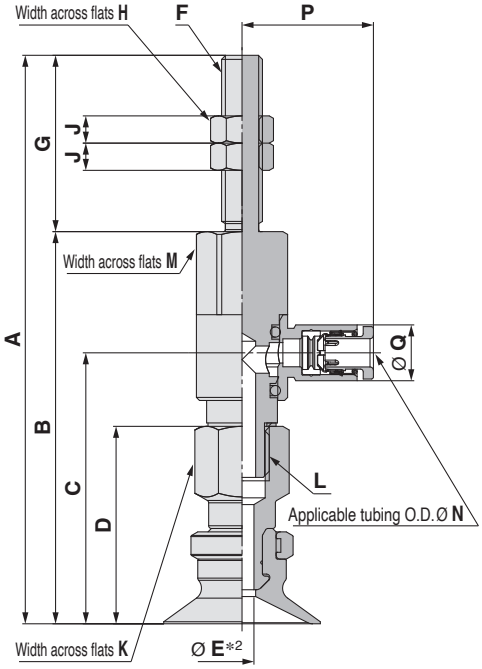

Construction p. 96
Adapter Assembly p. 101

ZPR 10 U N - 04 - A5
❶ ❷ ❸ ❹

❸ Vacuum inlet (One-touch fitting)

04	Ø 4
06	Ø 6
08	Ø 8

❹ Connection thread (Male thread)

A5	M5 x 0.8
A6	M6 x 1
A8	M8 x 1

Model							A	B	C	D	*2 E	F	G	H	J	K	L
	Vacuum inlet direction	❶ Pad dia.	Form	❷ Material *1	❸ Vacuum inlet	❹ Connection thread											
ZP	R	10 13	U	N S U F GN GS	04 06 08	A5	67	46	29.9	21	2.5	M5 x 0.8	21	8	4	8	M5 x 0.8
		16					67.5	46.5	30.4	21.5							
		10 13				A6	72	46	29.9	21	2.5	M6 x 1	26	8	4	8	M5 x 0.8
		16					72.5	46.5	30.4	21.5							
		20 25					83.5	57.6	39.8	29	3.5		25.9			12	M8 x 1.25
		32					84	58.1	40.3	29.5							
		40					86.5	60.6	42.8	32	4						
		50					87.5	61.6	43.8	33							
		20 25				A8	73.5	57.6	39.8	29	3.5	M8 x 1	15.9	12	4	12	M8 x 1.25
		32					74	58.1	40.3	29.5							
		40					76.5	60.6	42.8	32	4						
		50					77.5	61.6	43.8	33							

Dimensions Per Vacuum Inlet

Model							M	N	P	Q	Fitting part min. hole size
	Vacuum inlet direction	❶ Pad dia.	Form	❷ Material *1	❸ Vacuum inlet	❹ Connection thread					
ZP	R	10 13 16	U	N S U F GN GS	04	A5 A6	8	4	17.5	8.2	Ø 2.5
					06			6	18.3	10.4	Ø 4
		20 25 32			04	A6 A8	12	4	19.3	8.2	Ø 3
					06			6	20.5	10.4	Ø 4.5
					08		16	8	23.5	13.2	Ø 6
		40 50			06		12	6	20.5	10.4	Ø 4.5
					08		16	8	23.5	13.2	Ø 6

*1 N: NBR, S: Silicone rubber, U: Urethane rubber, F: FKM, GN: Conductive NBR, GS: Conductive silicone rubber
*2 Indicates the minimum hole size of the adapter or vacuum pad

Dimensions/Models

With adapter/One-touch fitting Ø 2 to Ø 8

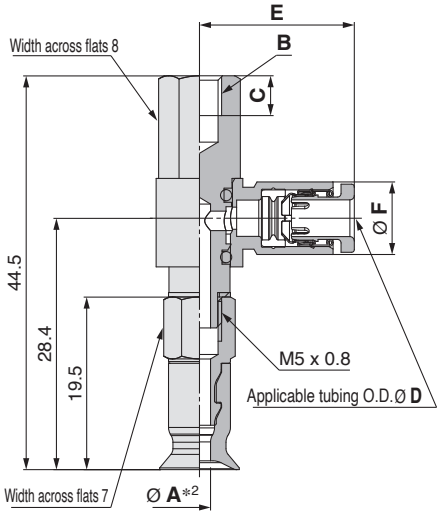

Construction p. 94
Adapter Assembly p. 101

ZPR 02 U N - 04 - B4

❶ ❷ ❸ ❹

Vacuum inlet ❸ (One-touch fitting)

04	Ø 4
06	Ø 6

❹ Connection thread (Female thread)

B4	M4 x 0.7
B5	M5 x 0.8

Model							A*2	B	C
	Vacuum inlet direction	❶ Pad dia.	Form	❷ Material *1	❸ Vacuum inlet	❹ Connection thread			
ZP	R	02	U	N S U F GN GS	04 06	B4	1.2	M4 x 0.7	4.5
		04					1.6		
		06 08					2.5		
		02				B5	1.2	M5 x 0.8	5.5
		04					1.6		
		06 08					2.5		

Dimensions Per Vacuum Inlet

Model							D	E	F	Fitting part min. hole size
	Vacuum inlet direction	❶ Pad dia.	Form	❷ Material *1	❸ Vacuum inlet	❹ Connection thread				
ZP	R	02 04 06 08	U	N S U F GN GS	04	B4 B5	4	17.5	8.2	Ø 2.5
					06		6	18.3	10.4	Ø 4

*1 N: NBR, S: Silicone rubber, U: Urethane rubber, F: FKM, GN: Conductive NBR, GS: Conductive silicone rubber
*2 Indicates the minimum hole size of the adapter or vacuum pad

Dimensions/Models

With adapter/One-touch fitting Ø 10 to Ø 50

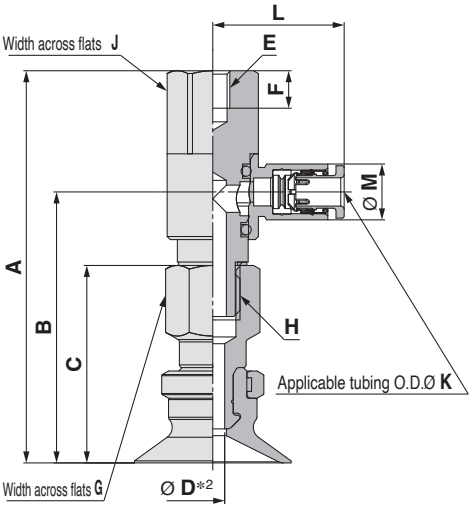

Construction p. 96
Adapter Assembly p. 101

ZPR 10 U N - 04 - B5
❶ ❷ ❸ ❹

❹ Connection thread (Female thread)

B5	M5 x 0.8
B6	M6 x 1
B8	M8 x 1.25

❸ Vacuum inlet (One-touch fitting)

04	Ø 4
06	Ø 6
08	Ø 8

Model							A	B	C	D*2	E	F	G	H
	Vacuum inlet direction	❶ Pad dia.	Form	❷ *1 Material	❸ Vacuum inlet	❹ Connection thread								
ZP	R	10 13	U	N S U F GN GS	04 06 08	B5	46	29.9	21	2.5	M5 x 0.8	5.5	8	M5 x 0.8
		16					46.5	30.4	21.5					
		20 25					57.6	39.8	29	3.5			12	M8 x 1.25
		32					58.1	40.3	29.5					
		10 13				B6	46	29.9	21	2.5	M6 x 1	6.5	8	M5 x 0.8
		16					46.5	30.4	21.5					
		20 25					57.6	39.8	29	3.5			12	M8 x 1.25
		32					58.1	40.3	29.5					
		40					60.6	42.8	32	4				
		50					61.6	43.8	33					
		20 25				B8	57.6	39.8	29	3.5	M8 x 1.25	8.5	12	M8 x 1.25
		32					58.1	40.3	29.5					
		40					60.6	42.8	32	4				
		50					61.6	43.8	33					

Dimensions Per Vacuum Inlet

Model							J	K	L	M	Fitting part min. hole size
	Vacuum inlet direction	❶ Pad dia.	Form	❷ *1 Material	❸ Vacuum inlet	❹ Connection thread					
ZP	R	10 13 16	U	N S U F GN GS	04	B5 B6	8	4	17.5	8.2	Ø 2.5
					06			6	18.3	10.4	Ø 4
		20 25 32			04	B5 B6 B8	12	4	19.3	8.2	Ø 3
					06			6	20.5	10.4	Ø 4.5
					08		16	8	23.5	13.2	Ø 6
		40 50			06	B6 B8	12	6	20.5	10.4	Ø 4.5
					08		16	8	23.5	13.2	Ø 6

*1 N: NBR, S: Silicone rubber, U: Urethane rubber, F: FKM, GN: Conductive NBR, GS: Conductive silicone rubber
*2 Indicates the minimum hole size of the adapter or vacuum pad

Dimensions/Models

With adapter/barb fitting Ø 2 to Ø 8

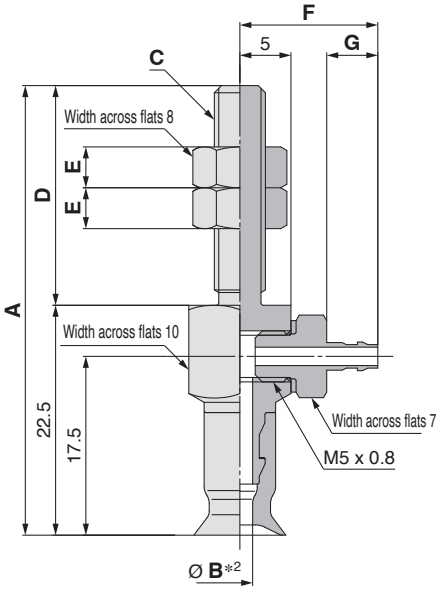

Construction	p. 94
Adapter Assembly	p. 102

ZPY 02 U N - N4 - A5

❶ ❷ ❸ ❹

❹ Connection thread (Male thread)

A5	M5 x 0.8
A6	M6 x 1

Vacuum inlet ❸ (Barb fitting)

N4	For Ø 4 nylon tubing	M-5AN-4
N6	For Ø 6 nylon tubing	M-5AN-6
U4	For Ø 4 soft tubing	M-5AU-4
U6	For Ø 6 soft tubing	M-5AU-6

Model							A	B*2	C	D	E
	Vacuum inlet direction	❶ Pad dia.	Form	❷ Material *1	❸ Vacuum inlet	❹ Connection thread					
ZP	Y	02	U	N S U F GN GS	N4 N6 U4 U6	A5	44	1.2	M5 x 0.8	21.5	4
		04						1.6			
		06 08						2.5			
		02				A6	49.5	1.2	M6 x 1	27	4
		04						1.6			
		06 08						2.5			

Dimensions Per Vacuum Inlet

Model							F	G	Fitting part min. hole size
	Vacuum inlet direction	❶ Pad dia.	Form	❷ Material *1	❸ Vacuum inlet	❹ Connection thread			
ZP	Y	02 04 06 08	U	N S U F GN GS	N4 U4	A5 A6	13.5	5	Ø 1.8
					N6 U6		15.5	7	Ø 2.5

*1 N: NBR, S: Silicone rubber, U: Urethane rubber, F: FKM, GN: Conductive NBR, GS: Conductive silicone rubber
*2 Indicates the minimum hole size of the adapter or vacuum pad

Dimensions/Models

With adapter/barb fitting Ø 10 to Ø 50

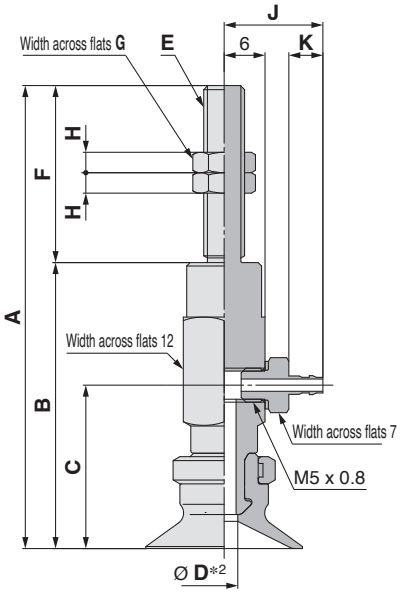

Construction p. 96
Adapter Assembly p. 102

ZPY 10 U N - N4 - A5

❶ ❷ ❸ ❹

❹ Connection thread (Male thread)

A5	M5 x 0.8
A6	M6 x 1
A8	M8 x 1

Vacuum inlet ❸ (Barb fitting)

N4	For Ø 4 nylon tubing	M-5AN-4
N6	For Ø 6 nylon tubing	M-5AN-6
U4	For Ø 4 soft tubing	M-5AU-4
U6	For Ø 6 soft tubing	M-5AU-6

Model							A	B	C	D*2	E	F	G	H
	Vacuum inlet direction	❶ Pad dia.	Form	❷ Material *1	❸ Vacuum inlet	❹ Connection thread								
ZP	Y	10 13	U	N S U F GN GS	N4 N6 U4 U6	A5	59	38	22	2.5	M5 x 0.8	21	8	4
		16					59.5	38.5	22.5					
		10 13				A6	64	38	22	2.5	M6 x 1	26	8	4
		16					64.5	38.5	22.5					
		20 25					68	42	24	3.5				
		32					68.5	42.5	24.5					
		40					72.5	46.5	28.5	6				
		50					73.5	47.5	29.5					
		20 25				A8	58	42	24	3.5	M8 x 1	16	12	4
		32					58.5	42.5	24.5					
		40					62.5	46.5	28.5	6				
		50					63.5	47.5	29.5					

Dimensions Per Vacuum Inlet

Model							J	K	Fitting part min. hole size
	Vacuum inlet direction	❶ Pad dia.	Form	❷ Material *1	❸ Vacuum inlet	❹ Connection thread			
ZP	Y	10 13 16 20 25 32	U	N S U F GN GS	N4 U4	A5 A6	14.5	5	Ø 1.8
					N6 U6		16.5	7	Ø 2.5
		40 50			N6 U6	A6 A8	16.5	7	Ø 2.5

*1 N: NBR, S: Silicone rubber, U: Urethane rubber, F: FKM, GN: Conductive NBR, GS: Conductive silicone rubber
*2 Indicates the minimum hole size of the adapter or vacuum pad

Dimensions/Models

With adapter/barb fitting Ø 2 to Ø 8

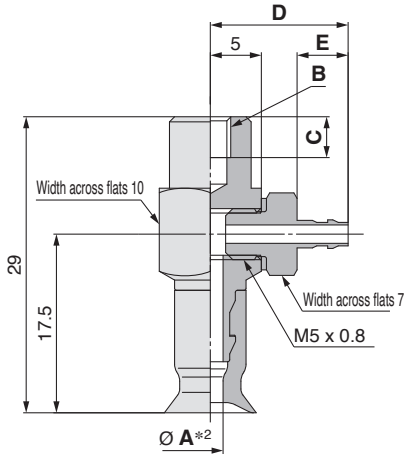

Construction p. 94
Adapter Assembly p. 102

ZPY 02 U N - N4 - B4

❶ ❷ ❸ ❹

❹ Connection thread (Female thread)

B4	M4 x 0.7
B5	M5 x 0.8

❸ Vacuum inlet (Barb fitting)

N4	For Ø 4 nylon tubing	M-5AN-4
N6	For Ø 6 nylon tubing	M-5AN-6
U4	For Ø 4 soft tubing	M-5AU-4
U6	For Ø 6 soft tubing	M-5AU-6

Model							A*2	B	C
	Vacuum inlet direction	❶ Pad dia.	Form	❷ Material *1	❸ Vacuum inlet	❹ Connection thread			
ZP	Y	02	U	N S U F GN GS	N4 N6 U4 U6	B4	1.2	M4 x 0.7	4
		04					1.6		
		06 08					2.5		
		02				B5	1.2	M5 x 0.8	5
		04					1.6		
		06 08					2.5		

Dimensions Per Vacuum Inlet

Model							D	E	Fitting part min. hole size
	Vacuum inlet direction	❶ Pad dia.	Form	❷ Material *1	❸ Vacuum inlet	❹ Connection thread			
ZP	Y	02 04 06 08	U	N S U F GN GS	N4 U4	B4 B5	13.5	5	Ø 1.8
					N6 U6		15.5	7	Ø 2.5

*1 N: NBR, S: Silicone rubber, U: Urethane rubber, F: FKM, GN: Conductive NBR, GS: Conductive silicone rubber
*2 Indicates the minimum hole size of the adapter or vacuum pad

Dimensions/Models

With adapter/barb fitting Ø 10 to Ø 50

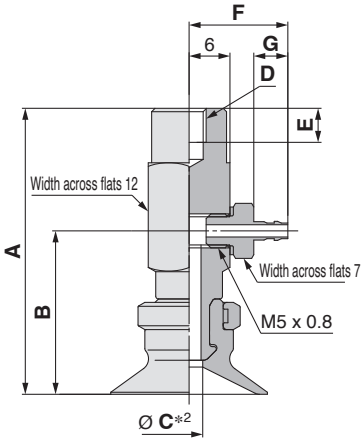

Construction p. 96
Adapter Assembly p. 102

ZPY 10 U N - N4 - B5

❶ ❷ ❸ ❹

❹ Connection thread (Female thread)

B5	M5 x 0.8
B6	M6 x 1
B8	M8 x 1.25

❸ Vacuum inlet (Barb fitting)

N4	For Ø 4 nylon tubing	M-5AN-4
N6	For Ø 6 nylon tubing	M-5AN-6
U4	For Ø 4 soft tubing	M-5AU-4
U6	For Ø 6 soft tubing	M-5AU-6

Model							A	B	C*2	D	E
	Vacuum inlet direction	❶ Pad dia.	Form	❷ Material *1	❸ Vacuum inlet	❹ Connection thread					
ZP	Y	10 13	U	N S U F GN GS	N4 N6 U4 U6	B5	38	22	2.5	M5 x 0.8	5
		16					38.5	22.5			
		20 25					42	24	3.5		
		32					42.5	24.5			
		10 13				B6	38	22	2.5	M6 x 1	6
		16					38.5	22.5			
		20 25					42	24	3.5		
		32					42.5	24.5			
		40					46.5	28.5	6		
		50					47.5	29.5			
		20 25				B8	42	24	3.5	M8 x 1.25	8
		32					42.5	24.5			
		40					46.5	28.5	6		
		50					47.5	29.5			

Dimensions Per Vacuum Inlet

Model							F	G	Fitting part min. hole size
	Vacuum inlet direction	❶ Pad dia.	Form	❷ Material *1	❸ Vacuum inlet	❹ Connection thread			
ZP	Y	10 13 16	U	N S U F GN GS	N4 U4	B4 B5	14.5	5	Ø 1.8
					N6 U6		16.5	7	Ø 2.5
		20 25 32			N4 U4	B5 B6 B8	14.5	5	Ø 1.8
					N6 U6		16.5	7	Ø 2.5
		40 50			N6 U6	B6 B8	16.5	7	Ø 2.5

*1 N: NBR, S: Silicone rubber, U: Urethane rubber, F: FKM, GN: Conductive NBR, GS: Conductive silicone rubber
*2 Indicates the minimum hole size of the adapter or vacuum pad

Dimensions/Models

With buffer Ø 2 to Ø 8

The drawings show the type with a buffer plate.

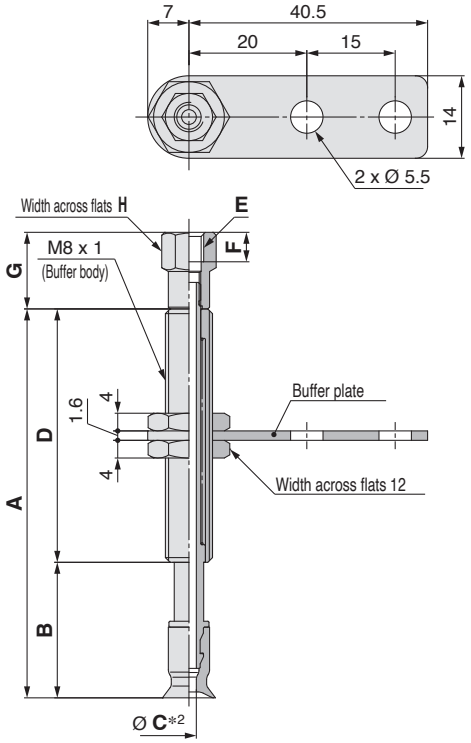

ZPT 02 U N J 6 - B3 - A8

❶ ❷ ❸ ❹ ❺ ❻

❸ Buffer specification

J	Rotating
K	Non-rotating
JN	Rotating (Without buffer plate)
KN	Non-rotating (Without buffer plate)

❻ Connection thread (Male thread)

A8	M8 x 1

❺ Vacuum inlet

B3	M3 x 0.5	Female thread	
B5	M5 x 0.8		
04	Ø 4	One-touch fitting	KQ2H04-M5N
06	Ø 6		KQ2H06-M5N
N4	For Ø 4 nylon tubing	Barb fitting	
U4	For Ø 4 soft tubing		

Model									A	B	C*2	D
	Vacuum inlet direction	❶ Pad dia.	Form	❷ *1 Material	❸ Buffer spec.	❹ Buffer stroke	❺ Vacuum inlet	❻ Connection thread				
ZP	T	02	U	N S U F GN GS	J K JN KN	6	B3 B5 04 06 N4 U4	A8	33	18	1.2	15
						10			66	23		43
						15			71	28		
						25			81	38		
		04				6			33	18	1.6	15
						10			66	23		43
						15			71	28		
						25			81	38		
		06 08				6			33	18	J: 2.5 K: 2	15
						10			66	23		43
						15			71	28		
						25			81	38		

Vacuum inlet: One-touch fitting

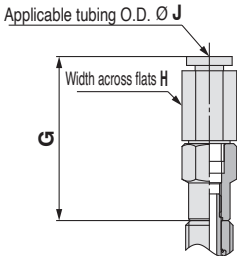

Vacuum inlet: Barb fitting

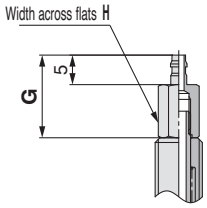

Construction	p. 116
Buffer Assembly	p. 103

Dimensions Per Vacuum Inlet: Female Thread

Model									E	F	G	H
	Vacuum inlet direction	❶ Pad dia.	Form	❷ *1 Material	❸ Buffer spec.	❹ Buffer stroke	❺ Vacuum inlet	❻ Connection thread				
ZP	T	02 04 06 08	U	N S U F GN GS	J K JN KN	6 10 15 25	B3	A8	M3 x 0.5	3	11	6
							B5		M5 x 0.8	5	13	8

Dimensions Per Vacuum Inlet: One-touch Fitting

Model									G	H	J	Fitting part min. hole size
	Vacuum inlet direction	❶ Pad dia.	Form	❷ *1 Material	❸ Buffer spec.	❹ Buffer stroke	❺ Vacuum inlet	❻ Connection thread				
ZP	T	02 04 06 08	U	N S U F GN GS	J K JN KN	6 10 15 25	04	A8	27.7	8	4	Ø 2.5
							06			10	6	

Dimensions Per Vacuum Inlet: Barb Fitting

Model									G	H	Fitting part min. hole size
	Vacuum inlet direction	❶ Pad dia.	Form	❷ *1 Material	❸ Buffer spec.	❹ Buffer stroke	❺ Vacuum inlet	❻ Connection thread			
ZP	T	02 04 06 08	U	N S U F GN GS	J K JN KN	6 10 15 25	N4	A8	14	6	Ø 1.8
							U4				

*1 N: NBR, S: Silicone rubber, U: Urethane rubber, F: FKM, GN: Conductive NBR, GS: Conductive silicone rubber
*2 Indicates the minimum hole size of the adapter or vacuum pad

Dimensions/Models

With buffer Ø 10 to Ø 50

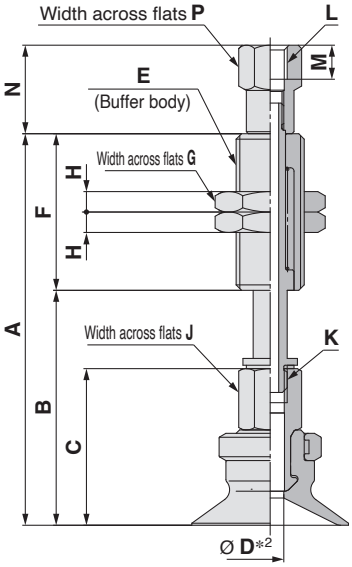

Construction	p. 118
Buffer Assembly	p. 103

ZPT 10 U N J 10 - B5 - A10
❶ ❷ ❹

❸ Buffer specification

J	Rotating
K	Non-rotating

❻ Connection thread (Male thread)

A10	M10 x 1
A14	M14 x 1

❺ Vacuum inlet (Female thread)

B5	M5 x 0.8
B01	Rc1/8
N01	NPT1/8
T01	NPTF1/8

Model									A	B	C	D*2	E	F	G	H	J	K
	Vacuum inlet direction	❶ Pad dia.	Form	❷ *1 Material	❸ Buffer spec.	❹ Buffer stroke	❺ Vacuum inlet	❻ Connection thread										
ZP	T	10 13	U	N S U F GN GS	J K	10	B5 04 06 N6 U6	A10	55.5	32.5	21	J: 2.5 K: 2	M10 x 1	23	14	3	8	M5 x 0.8
						20			93.5	42.5				51				
						30			103.5	52.5								
						40			139.5	62.5				77				
						50			149.5	72.5								
		16				10			56	33	21.5			23				
						20			94	43				51				
						30			104	53								
						40			140	63				77				
						50			150	73								
		20 25				10			57.5	34.5	23			23				
						20			95.5	44.5				51				
						30			105.5	54.5								
						40			141.5	64.5				77				
						50			151.5	74.5								
		32				10			58	35	23.5			23				
						20			96	45				51				
						30			106	55								
						40			142	65				77				
						50			152	75								
		40				10	B5 B01 N01 T01 06 08 N6 U6	A14	94.5	44.5	32	4	M14 x 1	50	19	4	12	M8 x 1.25
						20			104.5	54.5								
						30			114.5	64.5								
						50			159.5	84.5				75				
		50				10			95.5	45.5	33			50				
						20			105.5	55.5								
						30			115.5	65.5								
						50			160.5	85.5				75				

Dimensions Per Vacuum Inlet: Female Thread

Model									L	M	N	P
	Vacuum inlet direction	❶ Pad dia.	Form	❷ *1 Material	❸ Buffer spec.	❹ Buffer stroke	❺ Vacuum inlet	❻ Connection thread				
ZP	T	10 13 16 20 25 32	U	N S U F GN GS	J K	10 20 30 40 50	B5	A10	M5 x 0.8	5	13	8
		40 50				10	B5	A14	M5 x 0.8	4.5	15	10
						20 30 50				5	9	
						10	B01 N01 T01		Rc1/8 NPT1/8 NPTF1/8	—	16.5	13
						20 30 50					12	

*1 N: NBR, S: Silicone rubber, U: Urethane rubber, F: FKM, GN: Conductive NBR, GS: Conductive silicone rubber
*2 Indicates the minimum hole size of the adapter or vacuum pad

Dimensions/Models

With buffer Ø 10 to Ø 50

ZPT 10 U N J 10 - 04 - A10
❶ ❷ ❹

Buffer specification ❸

J	Rotating
K	Non-rotating

❻ Connection thread (Male thread)

A10	M10 x 1
A14	M14 x 1

❺ Vacuum inlet

			Pad diameter	
			Ø 10 to Ø 32	Ø 40, Ø 50 (10 st only)
04	Ø 4	One-touch fitting	KQ2H04-M5N	
06	Ø 6	One-touch fitting	KQ2H06-M5N	KQ2H06-01NS
08	Ø 8	One-touch fitting		KQ2H08-01NS
N6	For Ø 6 nylon tubing	Barb fitting		
U6	For Ø 6 soft tubing	Barb fitting		

Vacuum inlet: One-touch fitting

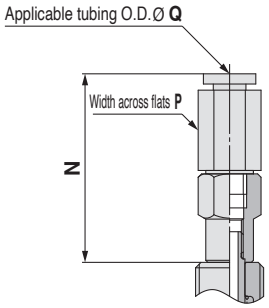

Vacuum inlet: Built-in One-touch fitting
Pad diameter: Ø 40, Ø 50 (Buffer stroke: 20 to 50 st)

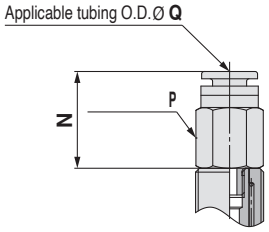

Vacuum inlet: Barb fitting

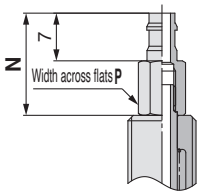

Dimensions Per Vacuum Inlet: One-touch Fitting

Model									N	P	Q	Fitting part min. hole size
	Vacuum inlet direction	❶ Pad dia.	Form	❷ Material *1	❸ Buffer spec.	❹ Buffer stroke	❺ Vacuum inlet	❻ Connection thread				
ZP	T	10, 13, 16, 20, 25, 32	U	N, S, U, F, GN, GS	J, K	10, 20, 30, 40, 50	04	A10	27.7	8	4	Ø 2.5
							06			10	6	
		40, 50				10	06	A14	31.8	10	6	Ø 4.5
							08		35.9	14	8	Ø 6
						20, 30, 50	06		19.9	12	6	Ø 3
							08		24.9	14	8	

Dimensions Per Vacuum Inlet: Barb Fitting

Model									N	P	Fitting part min. hole size
	Vacuum inlet direction	❶ Pad dia.	Form	❷ Material *1	❸ Buffer spec.	❹ Buffer stroke	❺ Vacuum inlet	❻ Connection thread			
ZP	T	10, 13, 16, 20, 25, 32	U	N, S, U, F, GN, GS	J, K	10, 20, 30, 40, 50	N6	A10	15	6	Ø 2.5
							U6				
		40, 50				10	N6	A14	19	10	
							U6				
						20, 30, 50	N6		12		
							U6				

*1 N: NBR, S: Silicone rubber, U: Urethane rubber, F: FKM, GN: Conductive NBR, GS: Conductive silicone rubber

Construction p. 118
Buffer Assembly p. 103

Dimensions/Models

With buffer/One-touch fitting Ø 2 to Ø 8

The drawings show the type with a buffer plate.

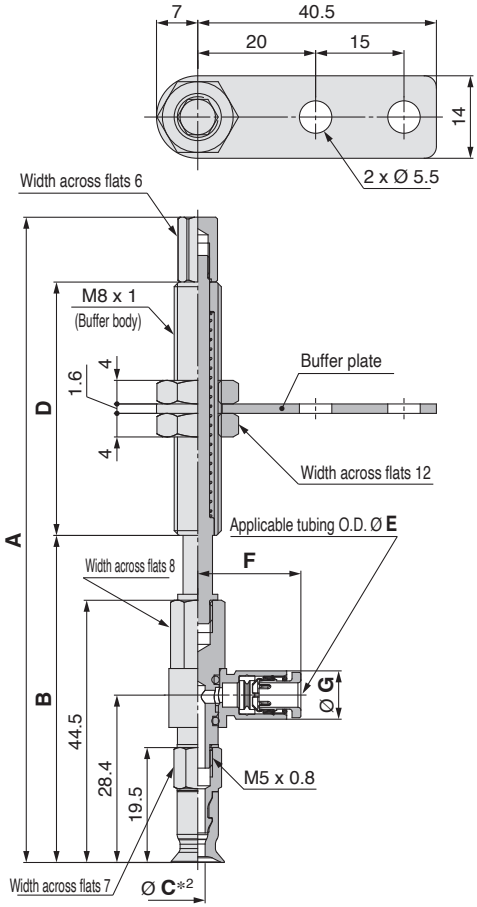

Construction p. 116
Buffer Assembly p. 104

ZPR 02 U N J 6 - 04 - A8

❶ ❷ ❹

Buffer specification ❸

J	Rotating
K	Non-rotating
JN	Rotating (Without buffer plate)
KN	Non-rotating (Without buffer plate)

❺ Vacuum inlet (One-touch fitting)

04	Ø 4
06	Ø 6

❻ Connection thread (Male thread)

A8	M8 x 1

Model									A	B	C*2	D
	Vacuum inlet direction	❶ Pad dia.	Form	❷ *1 Material	❸ Buffer spec.	❹ Buffer stroke	❺ Vacuum inlet	❻ Connection thread				
ZP	R	02	U	N S U F GN GS	J K JN KN	6	04 06	A8	78.5	52.5	1.2	15
						10			109.5	55.5		43
						15			114.5	60.5		
						25			124.5	70.5		
		04				6			78.5	52.5	1.6	15
						10			109.5	55.5		43
						15			114.5	60.5		
						25			124.5	70.5		
		06 08				6			78.5	52.5	2.5	15
						10			109.5	55.5		43
						15			114.5	60.5		
						25			124.5	70.5		

Dimensions Per Vacuum Inlet

Model									E	F	G	Fitting part min. hole size
	Vacuum inlet direction	❶ Pad dia.	Form	❷ *1 Material	❸ Buffer spec.	❹ Buffer stroke	❺ Vacuum inlet	❻ Connection thread				
ZP	R	02 04 06 08	U	N S U F GN GS	J K JN KN	6 10 15 25	04	A8	4	17.5	8.2	Ø 2.5
							06		6	18.3	10.4	Ø 4

*1 N: NBR, S: Silicone rubber, U: Urethane rubber, F: FKM, GN: Conductive NBR, GS: Conductive silicone rubber
*2 Indicates the minimum hole size of the adapter or vacuum pad

Dimensions/Models

With buffer/One-touch fitting Ø 10 to Ø 50

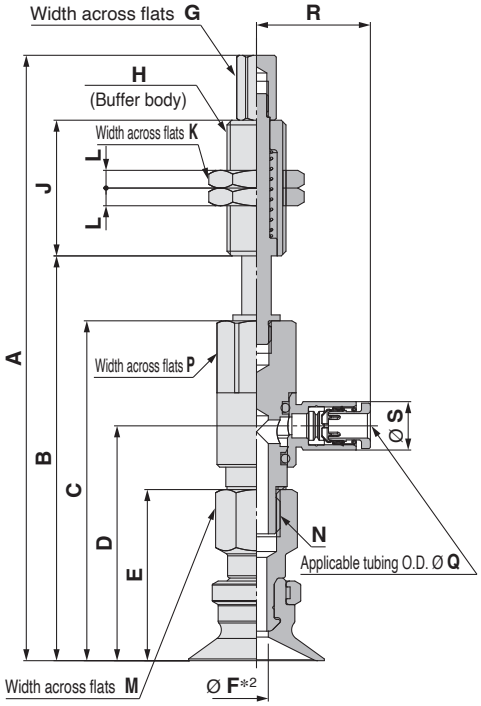

Construction	p. 118
Buffer Assembly	p. 104

ZPR 10 U N J 10 - 04 - A10

❶ ❷ ❹

Buffer specification ❸

J	Rotating
K	Non-rotating

❻ Connection thread (Male thread)

A10	M10 x 1
A14	M14 x 1

❺ Vacuum inlet (One-touch fitting)

04	Ø 4
06	Ø 6
08	Ø 8

Model									A	B	C	D	E	*2 F	G	H	J	K	L	M	N
	Vacuum inlet direction	❶ Pad dia.	Form	❷ *1 Material	❸ Buffer spec.	❹ Buffer stroke	❺ Vacuum inlet	❻ Connection thread													
ZP	R	10 13	U	N S U F GN GS	J K	10	04 06	A10	91	57	46	29.9	21	2.5	6	M10 x 1	23	14	3	8	M5 x 0.8
						20			129	67							51				
						30			139	77											
						40			175	87							77				
						50			185	97											
		16				10			91.5	57.5	46.5	30.4	21.5				23				
						20			129.5	67.5							51				
						30			139.5	77.5											
						40			175.5	87.5							77				
						50			185.5	97.5											
		20 25				10	04 06 08		102.6	68.6	57.6	39.8	29	3.5			23			12	M8 x 1.25
						20			140.6	78.6							51				
						30			150.6	88.6											
						40			186.6	98.6							77				
						50			196.6	108.6											
		32				10			103.1	69.1	58.1	40.3	29.5				23				
						20			141.1	79.1							51				
						30			151.1	89.1											
						40			187.1	99.1							77				
						50			197.1	109.6											
		40				10	06 08	A14	140.6	72.6	60.6	42.8	32	4	10	M14 x 1	50	19	4	12	M8 x 1.25
						20			137.6	82.6											
						30			147.6	92.6											
						50			192.6	112.6							75				
		50				10			141.6	73.6	61.6	43.8	33				50				
						20			138.6	83.6											
						30			148.6	93.6											
						50			193.6	113.6							75				

Dimensions Per Vacuum Inlet

Model									P	Q	R	S	Fitting part min. hole size
	Vacuum inlet direction	❶ Pad dia.	Form	❷ *1 Material	❸ Buffer spec.	❹ Buffer stroke	❺ Vacuum inlet	❻ Connection thread					
ZP	R	10 13 16	U	N S U F GN GS	J K	10 20 30 40 50	04	A10	8	4	17.5	8.2	Ø 2.5
							06			6	18.3	10.4	Ø 4
		20 25 32				10 20 30 40 50	04		12	4	19.3	8.2	Ø 3
							06			6	20.5	10.4	Ø 4.5
							08		16	8	23.5	13.2	Ø 6
		40 50				10 20 30 50	06	A14	12	6	20.5	10.4	Ø 4.5
							08		16	8	23.5	13.2	Ø 6

*1 N: NBR, S: Silicone rubber, U: Urethane rubber, F: FKM, GN: Conductive NBR, GS: Conductive silicone rubber
*2 Indicates the minimum hole size of the adapter or vacuum pad

Dimensions/Models

With buffer/barb fitting Ø 2 to Ø 8

The drawings show the type with a buffer plate.

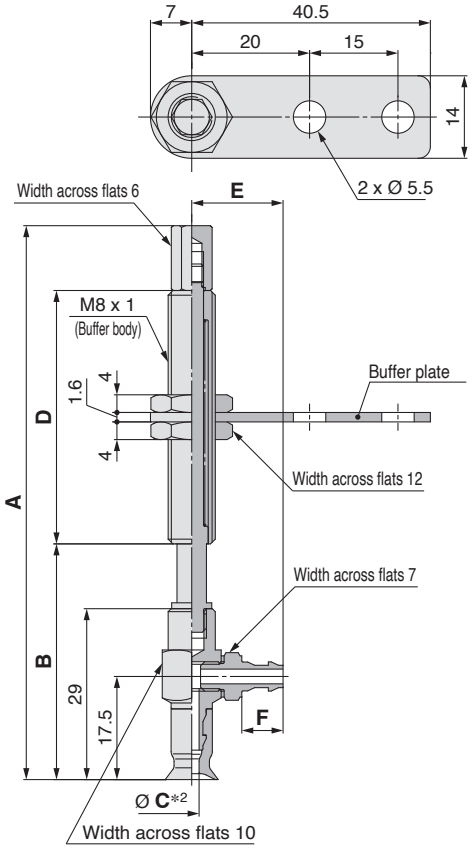

Construction p. 116
Buffer Assembly p. 105

ZPY 02 U N J 6 - N4 - A8

❶ ❷ ❹

Buffer specification ❸

J	Rotating
K	Non-rotating
JN	Rotating (Without buffer plate)
KN	Non-rotating (Without buffer plate)

❻ Connection thread (Male thread)

A8	M8 x 1

❺ Vacuum inlet (Barb fitting)

N4	For Ø 4 nylon tubing	M-5AN-4
N6	For Ø 6 nylon tubing	M-5AN-6
U4	For Ø 4 soft tubing	M-5AU-4
U6	For Ø 6 soft tubing	M-5AU-6

Model									A	B	C*2	D
	Vacuum inlet direction	❶ Pad dia.	Form	❷ *1 Material	❸ Buffer spec.	❹ Buffer stroke	❺ Vacuum inlet	❻ Connection thread				
ZP	Y	02	U	N S U F GN GS	J K JN KN	6	N4 N6 U4 U6	A8	63	37	1.2	15
						10			94	40		43
						15			99	45		
						25			109	55		
		04				6			63	37	1.6	15
						10			94	40		43
						15			99	45		
						25			109	55		
		06 08				6			63	37	2.5	15
						10			94	40		43
						15			99	45		
						25			109	55		

Dimensions Per Vacuum Inlet

Model									E	F	Fitting part min. hole size
	Vacuum inlet direction	❶ Pad dia.	Form	❷ *1 Material	❸ Buffer spec.	❹ Buffer stroke	❺ Vacuum inlet	❻ Connection thread			
ZP	Y	02 04 06 08	U	N S U F GN GS	J K JN KN	6 10 15 25	N4 U4	A8	13.5	5	Ø 1.8
							N6 U6		15.5	7	Ø 2.5

*1 N: NBR, S: Silicone rubber, U: Urethane rubber, F: FKM, GN: Conductive NBR, GS: Conductive silicone rubber
*2 Indicates the minimum hole size of the adapter or vacuum pad

Dimensions/Models

With buffer/barb fitting Ø 10 to Ø 50

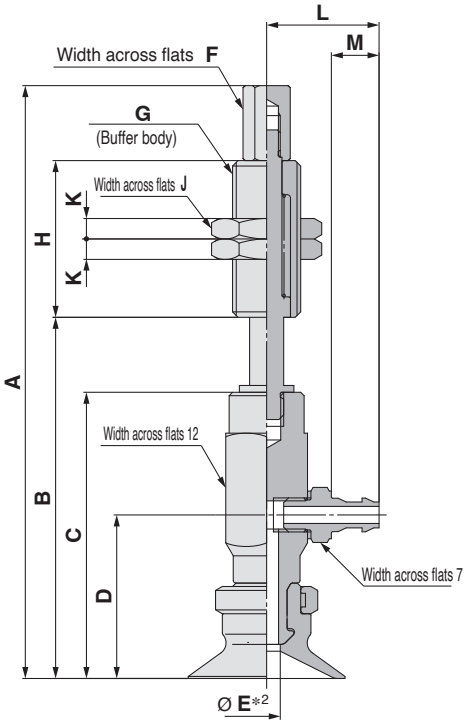

Construction	p. 118
Buffer Assembly	p. 105

ZPY 10 U N J 10 - N4 - A10

❶ ❷ ❹

Buffer specification ❸

J	Rotating
K	Non-rotating

❻ Connection thread (Male thread)

A10	M10 x 1
A14	M14 x 1

❺ Vacuum inlet (Barb fitting)

N4	For Ø 4 nylon tubing	M-5AN-4
N6	For Ø 6 nylon tubing	M-5AN-6
U4	For Ø 4 soft tubing	M-5AU-4
U6	For Ø 6 soft tubing	M-5AU-6

Model									A	B	C	D	E*2	F	G	H	J	K
	Vacuum inlet direction	❶ Pad dia.	Form	❷ Material*1	❸ Buffer spec.	❹ Buffer stroke	❺ Vacuum inlet	❻ Connection thread										
ZP	Y	10 13	U	N S U F GN GS	J K	10	N4 N6 U4 U6	A10	83	49	38	22	2.5	6	M10 x 1	23	14	3
						20			121	59						51		
						30			131	69								
						40			167	79						77		
						50			177	89								
		16				10			83.5	49.5	38.5	22.5				23		
						20			121.5	59.5						51		
						30			131.5	69.5								
						40			167.5	79.5						77		
						50			177.5	89.5								
		20 25				10			87	53	42	24	3.5	6	M10 x 1	23	14	3
						20			125	63						51		
						30			135	73								
						40			171	83						77		
						50			181	93								
		32				10			87.5	53.5	42.5	24.5				23		
						20			125.5	63.5						51		
						30			135.5	73.5								
						40			171.5	83.5						77		
						50			181.5	93.5								
		40				10	N6 U6	A14	126.5	58.5	46.5	28.5	6	10	M14 x 1	50	19	4
						20			123.5	68.5								
						30			133.5	78.5								
						50			178.5	98.5						75		
		50				10			127.5	59.5	47.5	29.5				50		
						20			124.5	69.5								
						30			134.5	79.5								
						50			179.5	99.5						75		

Dimensions Per Vacuum Inlet

Model									L	M	Fitting part min. hole size
	Vacuum inlet direction	❶ Pad dia.	Form	❷ Material*1	❸ Buffer spec.	❹ Buffer stroke	❺ Vacuum inlet	❻ Connection thread			
ZP	Y	10 13 16 20 25 32	U	N S U F GN GS	J K	10 20 30 40 50	N4 U4	A10	14.5	5	Ø 1.8
							N6 U6		16.5	7	Ø 2.5
		40 50					N6 U6	A14	16.5	7	Ø 2.5

*1 N: NBR, S: Silicone rubber, U: Urethane rubber, F: FKM, GN: Conductive NBR, GS: Conductive silicone rubber
*2 Indicates the minimum hole size of the adapter or vacuum pad

Basic Pad

Flat Type with Ribs

ZP Series

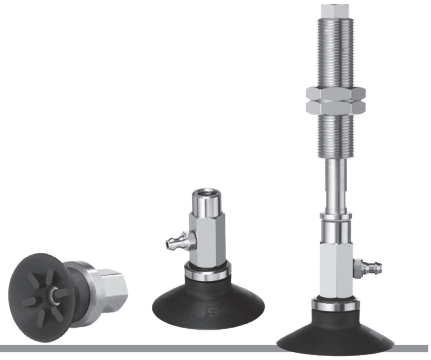

How to Order

		Dimensions/ Models	Construction	Mounting Bracket Assembly
Pad unit	ZP□ 10 C N – □	p. 27	p. 96	p. 100
With adapter	ZP□ T 10 C N – A5 – □	From p. 27	p. 96	p. 100
With buffer	ZP T 10 C N J 10 – B5 – A10	From p. 34	p. 97	From p. 103

∗ Pad unit's sales unit: 10 pcs. (Pad diameter: Ø 20 mm or less)

❶ ❷ ❸ ❹ ❺ ❻ ❼ ❽ ❾

● Flat type with ribs

❶ Adapter (Lock ring) material

—	Brass
S∗1	Stainless steel (Stainless steel 304)

∗1 Only applicable to the pad unit (with lock ring) and the pad with adapter (Vacuum inlet direction: Vertical (Option "T"))

❷ Vacuum inlet direction

—	Pad unit
T	Vertical
R	Lateral (With One-touch fitting)
Y	Lateral (With barb fitting)

❸ Pad diameter

10	Ø 10
13	Ø 13
16	Ø 16
20	Ø 20
25	Ø 25
32	Ø 32
40	Ø 40
50	Ø 50

❹ Material

N	NBR
S	Silicone rubber∗1 ∗2
U	Urethane rubber
F	FKM
GN	Conductive NBR
GS	Conductive silicone rubber

∗1 Uses a material compliant with a dissolution test of the FDA (U.S. Food and Drug Administration) regulation 21CFR§177.2600 for "Rubber articles intended for repeated use."

∗2 Uses a material compliant with the standards for "Rubber apparatus (excluding baby drinking apparatus) and containers/packaging" (D3) (Partial revision: Japanese Ministry of Health, Labour, and Welfare Notification No. 595, 2012) in Section 3 "Apparatus and Containers/Packaging" of the Japan Food Sanitation Act, Article 18 "Specifications and Standards for Food and Food Additives, etc." (Japanese Ministry of Health and Welfare Notification No. 370, 1959)

❺ Buffer specification

J	Rotating
K	Non-rotating

❻ Buffer stroke

Stroke [mm]	Pad diameter [mm]							
	Ø 10	Ø 13	Ø 16	Ø 20	Ø 25	Ø 32	Ø 40	Ø 50
10	●	●	●	●	●	●	●	●
20	●	●	●	●	●	●	●	●
30	●	●	●	●	●	●	●	●
40	●	●	●	●	●	●	—	—
50	●	●	●	●	●	●	●	●

With adapter

❼ Vacuum inlet

○: ZP□T/Vertical ●: ZPR/Lateral (With One-touch fitting) △: ZPY/Lateral (With barb fitting)

Type	Symbol	Size	Pad diameter [mm]		
			Ø 10 to Ø 16	Ø 20 to Ø 32	Ø 40, Ø 50
Male thread	AS5	M5 x 0.8	○∗4	○∗4	—
	AS6	M6 x 1	○∗4	○∗4	○∗4
	AG01	G1/8	○∗4	○∗4	—
	AG02	G1/4	—	—	○∗4
Female thread	—	M3 x 0.5	○ (❽Connection thread: A5/A6)	○ (❽Connection thread: A6)	○ (❽Connection thread: A6)
		M5 x 0.8	—	○ (❽Connection thread: A8)	○ (❽Connection thread: A8)
	B5	M5 x 0.8	○∗4	○∗4	—
	B6	M6 x 1	○∗4	○∗4	○∗4
	B8	M8 x 1.25	—	○∗4	○∗4
	BG01	G1/8	○∗4	○∗4	—
	BG02	G1/4	—	—	○∗4
	B01	Rc1/8	○∗4	○∗4	○∗4
	N01∗3	NPT1/8	○∗4	○∗4	○∗4
	T01∗3	NPTF1/8	○∗4	○∗4	○∗4
One-touch fitting	04	Ø 4	●	●	—
	06	Ø 6	●	●	●
	08	Ø 8	—	●	●
Barb fitting	N4	For Ø 4 nylon tubing∗1	△	△	—
	N6	For Ø 6 nylon tubing∗1	△	△	△
	U4	For Ø 4 soft tubing∗2	△	△	—
	U6	For Ø 6 soft tubing∗2	△	△	△

∗1 Nylon tube piping ∗2 Soft nylon/Polyurethane tube piping
∗3 Not compatible with stainless steel materials ∗4 Use the connection thread.

❽ Connection thread

○: ZP□T/Vertical ●: ZPR/Lateral (With One-touch fitting) △: ZPY/Lateral (With barb fitting)

Type	Symbol	Size	Pad diameter [mm]		
			Ø 10 to Ø 16	Ø 20 to Ø 32	Ø 40, Ø 50
Male thread∗1	A5	M5 x 0.8	○∗2●△	—	—
	A6	M6 x 1	○∗2●△	○∗2●△	○∗2●△
	A8	M8 x 1	—	○∗2●△	○∗2●△
Female thread	B5	M5 x 0.8	●△	●△	—
	B6	M6 x 1	●△	●△	●△
	B8	M8 x 1.25	—	●△	●△

∗1 The mounting nut is shipped together with the product (unassembled). ∗2 ○: ZP□T/Vertical comes with a vacuum inlet (female thread).

With buffer

❼ Vacuum inlet

○: ZPT/Vertical ●: ZPR/Lateral (With One-touch fitting) △: ZPY/Lateral (With barb fitting)

Type	Symbol	Size	Pad diameter [mm]		
			Ø 10 to Ø 16	Ø 20 to Ø 32	Ø 40, Ø 50
Female thread	B5	M5 x 0.8	○	○	○
	B01	Rc1/8	—	—	○
	N01	NPT1/8	—	—	○
	T01	NPTF1/8	—	—	○
One-touch fitting	04	Ø 4	○●	○●	—
	06	Ø 6	○●	○●	○●
	08	Ø 8	—	●	○●
Barb fitting	N4	For Ø 4 nylon tubing∗1	△	△	—
	N6	For Ø 6 nylon tubing∗1	○△	○△	○△
	U4	For Ø 4 soft tubing∗2	△	△	—
	U6	For Ø 6 soft tubing∗2	○△	○△	○△

∗1 Nylon tube piping
∗2 Soft nylon/Polyurethane tube piping

❽ Connection thread

○: ZPT/Vertical ●: ZPR/Lateral (With One-touch fitting) △: ZPY/Lateral (With barb fitting)

Type	Symbol	Size	Pad diameter [mm]		
			Ø 10 to Ø 16	Ø 20 to Ø 32	Ø 40, Ø 50
Male thread∗1	A10	M10 x 1	○●△	○●△	—
	A14	M14 x 1	—	—	○●△

∗1 The mounting nut and ○: ZPT/Vertical buffer are shipped together with the product (unassembled).

❾ Lock ring

Symbol	Pad diameter
	All sizes
—	With lock ring
X19	Without lock ring

Lock ring unit

Part no.	Pad diameter [mm]
ZP□L1	Ø 10 to Ø 16
ZP□L2	Ø 20 to Ø 32
ZP□L3	Ø 40, Ø 50

□: —/Brass S/Stainless steel

∗ The pad unit lock ring is shipped together with the product (unassembled).

Dimensions/Models

Single unit Ø 10 to Ø 50

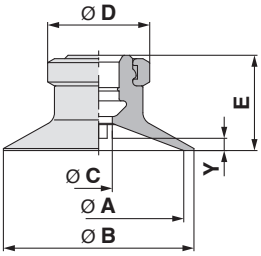

Construction	p. 96
Mounting Bracket Assembly	p. 100

ZP □ 10 C N
❶ ❷ ❸

❶ Lock ring material

—	Brass
S	Stainless steel (Stainless steel 304)

Model ❶ Lock ring material	❷ Pad dia.	Form	❸ Material *1	A	B	C	D	E	Y
ZP — / S	10	C	N S U F GN GS	10	12	4	13	12	1.7
	13			13	15				1.8
	16			16	18			12.5	1.2
	20			20	23		15	14	1.7
	25			25	28				1.8
	32			32	35			14.5	2.3
	40			40	43	7	18	18.5	3.3
	50			50	53			19.5	3.8

*1 N: NBR, S: Silicone rubber, U: Urethane rubber, F: FKM, GN: Conductive NBR, GS: Conductive silicone rubber

With adapter Ø 10 to Ø 50

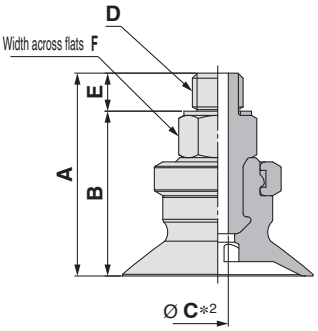

Construction	p. 96
Adapter Assembly	p. 100

ZP □ T 10 C N - AS5
❶ ❷ ❸ ❹

❶ Adapter (Lock ring) material

—	Brass
S	Stainless steel (Stainless steel 304)

❹ Vacuum inlet (Male thread)

AS5	M5 x 0.8
AS6	M6 x 1
AG01	G1/8
AG02	G1/4

Model ❶ Adapter material	Vacuum inlet direction	❷ Pad dia.	Form	❸ Material *1	❹ Vacuum inlet	A	B	C*2	D	E	F
ZP — / S	T	10 13	C	N S U F GN GS	AS5	21	17.5	2.5	M5 x 0.8	3.5	8
		16				21.5	18				
		20 25				23	19.5				
		32				23.5	20				
		10 13			AS6	22	17.5	2.5	M6 x 1	4.5	8
		16				22.5	18				
		20 25				24	19.5				
		32				24.5	20				
		40				29.5	25				12
		50				30.5	26				
		10 13			AG01	30	24.5	2.5	G1/8	5.5	17
		16				30.5	25				
		20 25				32	26.5	4			
		32				32.5	27				
		40			AG02	39	32.5	7	G1/4	6.5	21
		50				40	33.5				

*1 N: NBR, S: Silicone rubber, U: Urethane rubber, F: FKM, GN: Conductive NBR, GS: Conductive silicone rubber
*2 Indicates the minimum hole size of the adapter or vacuum pad

Dimensions/Models

With adapter Ø 10 to Ø 50

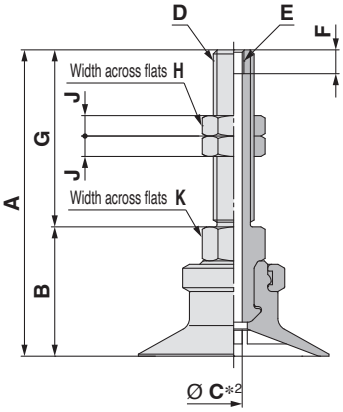

Construction	p. 96
Adapter Assembly	p. 100

ZP □ T 10 C N - A5
❶ ❷ ❸ ❹

❶ Adapter (Lock ring) material

—	Brass
S	Stainless steel (Stainless steel 304)

❹ Connection thread (Male thread)

A5	M5 x 0.8 (M3 x 0.5 With female thread)
A6	M6 x 1 (M3 x 0.5 With female thread)
A8	M8 x 1 (M5 x 0.8 With female thread)

Model							A	B	C*2	D	E	F	G	H	J	K
	❶ Adapter material	Vacuum inlet direction	❷ Pad dia.	Form	❸ Material *1	❹ Connection thread										
ZP	— S	T	10 13	C	N S U F GN GS	A5	38	17	2.5	M5 x 0.8	M3 x 0.5	3.5	21	8	4	8
			16				38.5	17.5								
			10 13			A6	43	17	2.5	M6 x 1	M3 x 0.5	3.5	26	8	4	8
			16				43.5	17.5								
			20 25				45	19								
			32				45.5	19.5								
			40				50.5	24.5								12
			50				51.5	25.5								
			20 25			A8	40	24	4	M8 x 1	M5 x 0.8	5	16	12	4	12
			32				40.5	24.5								
			40						4.2							
			50				41.5	25.5								

*1 N: NBR, S: Silicone rubber, U: Urethane rubber, F: FKM, GN: Conductive NBR, GS: Conductive silicone rubber
*2 Indicates the minimum hole size of the adapter or vacuum pad

Dimensions/Models

With adapter ∅10 to ∅50

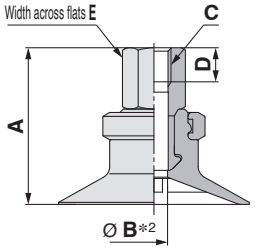

Construction p. 96
Adapter Assembly p. 100

ZP □ T 10 C N - B5
❶ ❷ ❸ ❹

❶ Adapter (Lock ring) material

—	Brass
S	Stainless steel (Stainless steel 304)

❹ Vacuum inlet (Female thread)

B5	M5 x 0.8
B6	M6 x 1
B8	M8 x 1.25
BG01	G1/8
BG02	G1/4
B01	Rc1/8
N01*1	NPT1/8
T01*1	NPTF1/8

*1 Not compatible with stainless steel materials

Model							A	B*2	C	D	E
	❶ Adapter material	Vacuum inlet direction	❷ Pad dia.	Form	❸ *1 Material	❹ Vacuum inlet					
ZP	— S	T	10 13	C	N S U F GN GS	B5	21	2.5	M5 x 0.8	5	8
			16				21.5				
			20 25				23	4			
			32				23.5				
			10 13			B6	21	2.5	M6 x 1	6	8
			16				21.5				
			20 25				23	4			
			32				23.5				
			40				32	4.9			12
			50				33				
			20 25			B8	29	3.5	M8 x 1.25	8	12
			32				29.5				
			40				32	6.6			
			50				33				
			10 13			BG01	27	2.5	G1/8	7.4	14
			16				27.5				
			20 25				29	4			
			32				29.5				
			40 50			BG02	38	7	G1/4	11	17
							39				
			10 13			B01 N01*3 T01*3	27	2.5	Rc1/8 NPT1/8 NPTF1/8	—	12
			16				27.5				
			20 25				29	3.5			
			32				29.5				
			40				32	7			
			50				33				

*1 N: NBR, S: Silicone rubber, U: Urethane rubber, F: FKM, GN: Conductive NBR, GS: Conductive silicone rubber
*2 Indicates the minimum hole size of the adapter or vacuum pad
*3 Not compatible with stainless steel materials

Dimensions/Models

With adapter/One-touch fitting Ø 10 to Ø 50

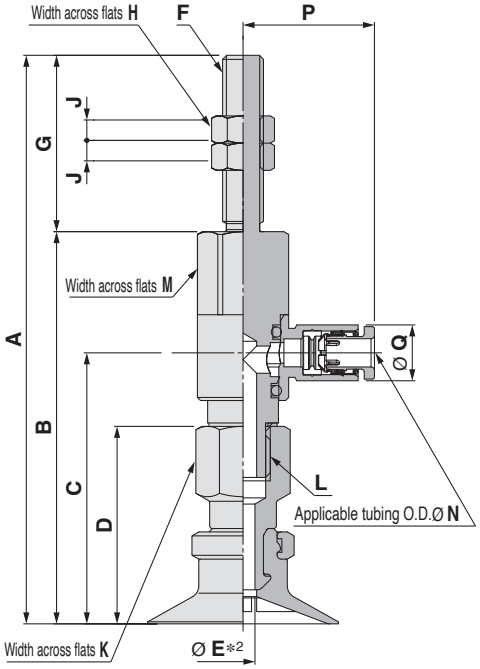

Construction p. 96
Adapter Assembly p. 101

ZPR 10 C N - 04 - A5
❶ ❷ ❸ ❹

❸ Vacuum inlet (One-touch fitting)

04	Ø 4
06	Ø 6
08	Ø 8

❹ Connection thread (Male thread)

A5	M5 x 0.8
A6	M6 x 1
A8	M8 x 1

Model							A	B	C	D	*2 E	F	G	H	J	K	L
	Vacuum inlet direction	❶ Pad dia.	Form	❷ *1 Material	❸ Vacuum inlet	❹ Connection thread											
ZP	R	10 13	C	N S U F GN GS	04 06 08	A5	67	46	29.9	21	2.5	M5 x 0.8	21	8	4	8	M5 x 0.8
		16					67.5	46.5	30.4	21.5							
		10 13				A6	72	46	29.9	21	2.5	M6 x 1	26	8	4	8	M5 x 0.8
		16					72.5	46.5	30.4	21.5							
		20 25					83.5	57.6	39.8	29	3.5		25.9			12	M8 x 1.25
		32					84	58.1	40.3	29.5							
		40					86.5	60.6	42.8	32	4						
		50					87.5	61.6	43.8	33							
		20 25				A8	73.5	57.6	39.8	29	3.5	M8 x 1	15.9	12	4	12	M8 x 1.25
		32					74	58.1	40.3	29.5							
		40					76.5	60.6	42.8	32	4						
		50					77.5	61.6	43.8	33							

Dimensions Per Vacuum Inlet

Model							M	N	P	Q	Fitting part min. hole size
	Vacuum inlet direction	❶ Pad dia.	Form	❷ *1 Material	❸ Vacuum inlet	❹ Connection thread					
ZP	R	10 13 16	C	N S U F GN GS	04	A5 A6	8	4	17.5	8.2	Ø 2.5
					06			6	18.3	10.4	Ø 4
		20 25 32			04	A6 A8	12	4	19.3	8.2	Ø 3
					06			6	20.5	10.4	Ø 4.5
					08		16	8	23.5	13.2	Ø 6
		40 50			06	A6 A8	12	6	20.5	10.4	Ø 4.5
					08		16	8	23.5	13.2	Ø 6

*1 N: NBR, S: Silicone rubber, U: Urethane rubber, F: FKM, GN: Conductive NBR, GS: Conductive silicone rubber
*2 Indicates the minimum hole size of the adapter or vacuum pad

Dimensions/Models

With adapter/One-touch fitting Ø 10 to Ø 50

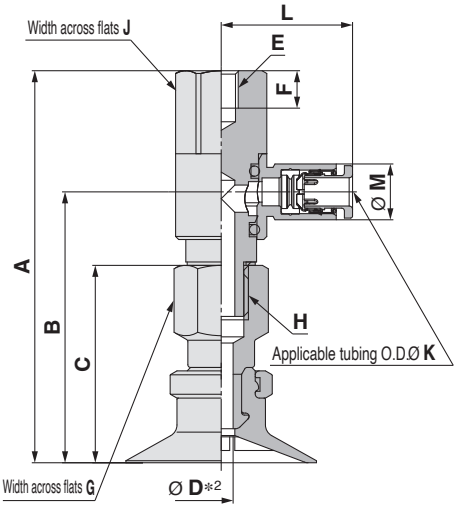

Construction p. 96
Adapter Assembly p. 101

ZPR 10 C N - 04 - B5
❶ ❷ ❸ ❹

❸ Vacuum inlet (One-touch fitting)

04	Ø 4
06	Ø 6
08	Ø 8

❹ Connection thread (Female thread)

B5	M5 x 0.8
B6	M6 x 1
B8	M8 x 1.25

Model							A	B	C	D*2	E	F	G	H
	Vacuum inlet direction	❶ Pad dia.	Form	❷ *1 Material	❸ Vacuum inlet	❹ Connection thread								
ZP	R	10 13	C	N S U F GN GS	04 06 08	B5	46	29.9	21	2.5	M5 x 0.8	5.5	8	M5 x 0.8
		16					46.5	30.4	21.5					
		20 25					57.6	39.8	29	3.5			12	M8 x 1.25
		32					58.1	40.3	29.5					
		10 13				B6	46	29.9	21	2.5	M6 x 1	6.5	8	M5 x 0.8
		16					46.5	30.4	21.5					
		20 25					57.6	39.8	29	3.5			12	M8 x 1.25
		32					58.1	40.3	29.5					
		40					60.6	42.8	32	4				
		50					61.6	43.8	33					
		20 25				B8	57.6	39.8	29	3.5	M8 x 1.25	8.5	12	M8 x 1.25
		32					58.1	40.3	29.5					
		40					60.6	42.8	32	4				
		50					61.6	43.8	33					

Dimensions Per Vacuum Inlet

Model							J	K	L	M	Fitting part min. hole size
	Vacuum inlet direction	❶ Pad dia.	Form	❷ *1 Material	❸ Vacuum inlet	❹ Connection thread					
ZP	R	10 13 16	C	N S U F GN GS	04	B5 B6	8	4	17.5	8.2	Ø 2.5
					06			6	18.3	10.4	Ø 4
		20 25 32			04	B5 B6 B8	12	4	19.3	8.2	Ø 3
					06			6	20.5	10.4	Ø 4.5
					08		16	8	23.5	13.2	Ø 6
		40 50			06	B6 B8	12	6	20.5	10.4	Ø 4.5
					08		16	8	23.5	13.2	Ø 6

*1 N: NBR, S: Silicone rubber, U: Urethane rubber, F: FKM, GN: Conductive NBR, GS: Conductive silicone rubber
*2 Indicates the minimum hole size of the adapter or vacuum pad

Dimensions/Models

With adapter/barb fitting Ø 10 to Ø 50

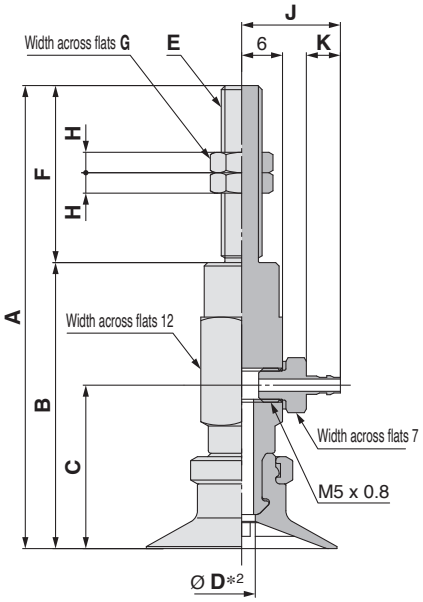

Construction	p. 96
Adapter Assembly	p. 102

ZPY 10 C N - N4 - A5

❶ ❷ ❸ ❹

❸ Vacuum inlet (Barb fitting)

N4	For Ø 4 nylon tubing	M-5AN-4
N6	For Ø 6 nylon tubing	M-5AN-6
U4	For Ø 4 soft tubing	M-5AU-4
U6	For Ø 6 soft tubing	M-5AU-6

❹ Connection thread (Male thread)

A5	M5 x 0.8
A6	M6 x 1
A8	M8 x 1

Model							A	B	C	D*2	E	F	G	H
	Vacuum inlet direction	❶ Pad dia.	Form	❷ Material *1	❸ Vacuum inlet	❹ Connection thread								
ZP	Y	10 13	C	N S U F GN GS	N4 N6 U4 U6	A5	59	38	22	2.5	M5 x 0.8	21	8	4
		16					59.5	38.5	22.5					
		10 13				A6	64	38	22	2.5	M6 x 1	26	8	4
		16					64.5	38.5	22.5					
		20 25					68	42	24	3.5				
		32					68.5	42.5	24.5					
		40					72.5	46.5	28.5	6				
		50					73.5	47.5	29.5					
		20 25				A8	58	42	24	3.5	M8 x 1	16	12	4
		32					58.5	42.5	24.5					
		40					62.5	46.5	28.5	6				
		50					63.5	47.5	29.5					

Dimensions Per Vacuum Inlet

Model							J	K	Fitting part min. hole size
	Vacuum inlet direction	❶ Pad dia.	Form	❷ Material *1	❸ Vacuum inlet	❹ Connection thread			
ZP	Y	10 13 16 20 25 32	C	N S U F GN GS	N4 U4	A5 A6	14.5	5	Ø 1.8
					N6 U6		16.5	7	Ø 2.5
		40 50			N6 U6	A6 A8	16.5	7	Ø 2.5

*1 N: NBR, S: Silicone rubber, U: Urethane rubber, F: FKM, GN: Conductive NBR, GS: Conductive silicone rubber

*2 Indicates the minimum hole size of the adapter or vacuum pad

Dimensions/Models

With adapter/barb fitting Ø 10 to Ø 50

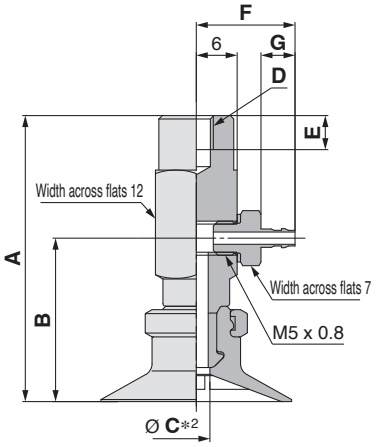

Construction p. 96
Adapter Assembly p. 102

ZPY 10 C N - N4 - B5
❶ ❷ ❸ ❹

❹ Connection thread (Female thread)

B5	M5 x 0.8
B6	M6 x 1
B8	M8 x 1.25

❸ Vacuum inlet (Barb fitting)

N4	For Ø 4 nylon tubing	M-5AN-4
N6	For Ø 6 nylon tubing	M-5AN-6
U4	For Ø 4 soft tubing	M-5AU-4
U6	For Ø 6 soft tubing	M-5AU-6

Model							A	B	C*2	D	E
	Vacuum inlet direction	❶ Pad dia.	Form	❷ Material *1	❸ Vacuum inlet	❹ Connection thread					
ZP	Y	10 13	C	N S U F GN GS	N4 N6 U4 U6	B5	38	22	2.5	M5 x 0.8	5
		16					38.5	22.5			
		20 25					42	24	3.5		
		32					42.5	24.5			
		10 13				B6	38	22	2.5	M6 x 1	6
		16					38.5	22.5			
		20 25					42	24	3.5		
		32					42.5	24.5			
		40					46.5	28.5	6		
		50					47.5	29.5			
		20 25				B8	42	24	3.5	M8 x 1.25	8
		32					42.5	24.5			
		40					46.5	28.5	6		
		50					47.5	29.5			

Dimensions Per Vacuum Inlet

Model							F	G	Fitting part min. hole size
	Vacuum inlet direction	❶ Pad dia.	Form	❷ Material *1	❸ Vacuum inlet	❹ Connection thread			
ZP	Y	10 13 16	C	N S U F GN GS	N4 U4	B4 B5	14.5	5	Ø 1.8
					N6 U6		16.5	7	Ø 2.5
		20 25 32			N4 U4	B5 B6 B8	14.5	5	Ø 1.8
					N6 U6		16.5	7	Ø 2.5
		40 50			N6 U6	B6 B8	16.5	7	Ø 2.5

*1 N: NBR, S: Silicone rubber, U: Urethane rubber, F: FKM, GN: Conductive NBR, GS: Conductive silicone rubber
*2 Indicates the minimum hole size of the adapter or vacuum pad

Dimensions/Models

With buffer Ø 10 to Ø 50

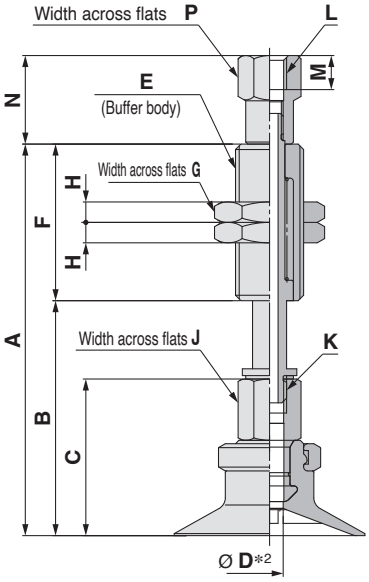

Construction	p. 118
Buffer Assembly	p. 103

ZPT 10 C N J 10 - B5 - A10

❶ ❷ ❹

❸ Buffer specification

J	Rotating
K	Non-rotating

❻ Connection thread (Male thread)

A10	M10 x 1
A14	M14 x 1

❺ Vacuum inlet (Female thread)

B5	M5 x 0.8
B01	Rc1/8
N01	NPT1/8
T01	NPTF1/8

Model																			
	Vacuum inlet direction	❶ Pad dia.	Form	❷ Material *1	❸ Buffer spec.	❹ Buffer stroke	❺ Vacuum inlet	❻ Connection thread	A	B	C	D*2	E	F	G	H	J	K
ZP	T	10 13	C	N S U F GN GS	J K	10	B5 04 06 N6 U6	A10	55.5	32.5	21	J: 2.5 K: 2	M10 x 1	23	14	3	8	M5 x 0.8
						20			93.5	42.5				51				
						30			103.5	52.5								
						40			139.5	62.5				77				
						50			149.5	72.5								
		16				10			56	33	21.5			23				
						20			94	43				51				
						30			104	53								
						40			140	63				77				
						50			150	73								
		20 25				10			57.5	34.5	23			23				
						20			95.5	44.5				51				
						30			105.5	54.5								
						40			141.5	64.5				77				
						50			151.5	74.5								
		32				10			58	35	23.5			23				
						20			96	45				51				
						30			106	55								
						40			142	65				77				
						50			152	75								
		40				10	B5 B01 N01 T01 06 08 N6 U6	A14	94.5	44.5	32	4	M14 x 1	50	19	4	12	M8 x 1.25
						20			104.5	54.5								
						30			114.5	64.5								
						50			159.5	84.5				75				
		50				10			95.5	45.5	33			50				
						20			105.5	55.5								
						30			115.5	65.5								
						50			160.5	85.5				75				

Dimensions Per Vacuum Inlet: Female Thread

Model									L	M	N	P
	Vacuum inlet direction	❶ Pad dia.	Form	❷ Material *1	❸ Buffer spec.	❹ Buffer stroke	❺ Vacuum inlet	❻ Connection thread				
ZP	T	10 13 16 20 25 32	C	N S U F GN GS	J K	10 20 30 40 50	B5	A10	M5 x 0.8	5	13	8
		40 50				10	B5	A14	M5 x 0.8	4.5	15	10
						20 30 50				5	9	
						10	B01 N01 T01		Rc1/8 NPT1/8 NPTF1/8	—	16.5	13
						20 30 50					12	

*1 N: NBR, S: Silicone rubber, U: Urethane rubber, F: FKM, GN: Conductive NBR, GS: Conductive silicone rubber
*2 Indicates the minimum hole size of the adapter or vacuum pad

Dimensions/Models

With buffer Ø 10 to Ø 50

ZPT 10 C N J 10 - 04 - A10
❶ ❷ ❹

Buffer specification ❸

J	Rotating
K	Non-rotating

❻ Connection thread (Male thread)

A10	M10 x 1
A14	M14 x 1

❺ Vacuum inlet

			Pad diameter Ø 10 to Ø 32	Pad diameter Ø 40, Ø 50 (10 st only)
04	Ø 4	One-touch fitting	KQ2H04-M5N	
06	Ø 6	One-touch fitting	KQ2H06-M5N	KQ2H06-01NS
08	Ø 8	One-touch fitting		KQ2H08-01NS
N6	For Ø 6 nylon tubing	Barb fitting		
U6	For Ø 6 soft tubing	Barb fitting		

Vacuum inlet: One-touch fitting

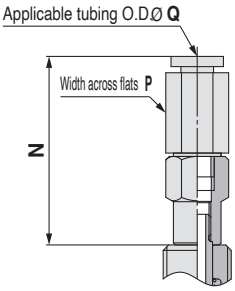

Vacuum inlet: Built-in One-touch fitting
Pad diameter: Ø 40, Ø 50 (Buffer stroke: 20 to 50 st)

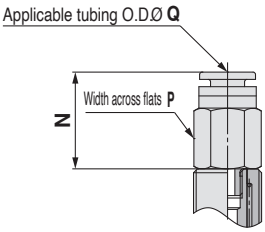

Vacuum inlet: Barb fitting

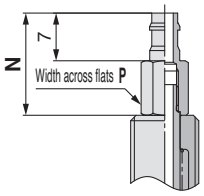

Dimensions Per Vacuum Inlet: One-touch Fitting

Model									N	P	Q	Fitting part min. hole size
	Vacuum inlet direction	❶ Pad dia.	Form	❷ Material *1	❸ Buffer spec.	❹ Buffer stroke	❺ Vacuum inlet	❻ Connection thread				
ZP	T	10, 13, 16, 20, 25, 32	C	N, S, U, F, GN, GS	J, K	10, 20, 30, 40, 50	04	A10	27.7	8	4	Ø 2.5
							06			10	6	
		40, 50				10	06	A14	31.8	10	6	Ø 4.5
							08		35.9	14	8	Ø 6
						20, 30, 50	06		19.9	12	6	Ø 3
							08		24.9	14	8	

Dimensions Per Vacuum Inlet: Barb Fitting

Model									N	P	Fitting part min. hole size
	Vacuum inlet direction	❶ Pad dia.	Form	❷ Material *1	❸ Buffer spec.	❹ Buffer stroke	❺ Vacuum inlet	❻ Connection thread			
ZP	T	10, 13, 16, 20, 25, 32	C	N, S, U, F, GN, GS	J, K	10, 20, 30, 40, 50	N6	A10	15	6	Ø 2.5
							U6				
		40, 50				10	N6	A14	19	10	
							U6				
						20, 30, 50	N6		12		
							U6				

*1 N: NBR, S: Silicone rubber, U: Urethane rubber, F: FKM, GN: Conductive NBR, GS: Conductive silicone rubber

Construction p. 118
Buffer Assembly p. 103

Dimensions/Models

With buffer/One-touch fitting Ø 10 to Ø 50

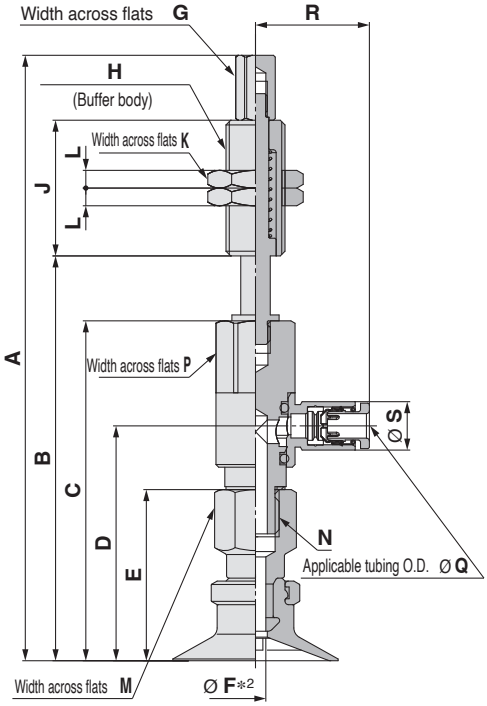

Construction	p. 118
Buffer Assembly	p. 104

ZPR 10 C N J 10 - 04 - A10

❶ ❷ ❹

❸ Buffer specification

J	Rotating
K	Non-rotating

❻ Connection thread (Male thread)

A10	M10 x 1
A14	M14 x 1

❺ Vacuum inlet (One-touch fitting)

04	Ø 4
06	Ø 6
08	Ø 8

Model									A	B	C	D	E	*2 F	G	H	J	K	L	M	N
	Vacuum inlet direction	❶ Pad dia.	Form	❷ *1 Material	❸ Buffer spec.	❹ Buffer stroke	❺ Vacuum inlet	❻ Connection thread													
ZP	R	10 13	C	N S U F GN GS	J K	10	04 06	A10	91	57	46	29.9	21	2.5	6	M10 x 1	23	14	3	8	M5 x 0.8
						20			129	67							51				
						30			139	77											
						40			175	87							77				
						50			185	97											
		16				10			91.5	57.5	46.5	30.4	21.5				23				
						20			129.5	67.5							51				
						30			139.5	77.5											
						40			175.5	87.5							77				
						50			185.5	97.5											
		20 25				10	04 06 08		102.6	68.6	57.6	39.8	29	3.5			23			12	M8 x 1.25
						20			140.6	78.6							51				
						30			150.6	88.6											
						40			186.6	98.6							77				
						50			196.6	108.6											
		32				10			103.1	69.1	58.1	40.3	29.5				23				
						20			141.1	79.1							51				
						30			151.1	89.1											
						40			187.1	99.1							77				
						50			197.1	109.6											
		40				10	06 08	A14	140.6	72.6	60.6	42.8	32	4	10	M14 x 1	50	19	4	12	M8 x 1.25
						20			137.6	82.6											
						30			147.6	92.6											
						50			192.6	112.6							75				
		50				10			141.6	73.6	61.6	43.8	33				50				
						20			138.6	83.6											
						30			148.6	93.6											
						50			193.6	113.6							75				

Dimensions Per Vacuum Inlet

Model									P	Q	R	S	Fitting part min. hole size
	Vacuum inlet direction	❶ Pad dia.	Form	❷ *1 Material	❸ Buffer spec.	❹ Buffer stroke	❺ Vacuum inlet	❻ Connection thread					
ZP	R	10 13 16	C	N S U F GN GS	J K	10 20 30 40 50	04	A10	8	4	17.5	8.2	Ø 2.5
							06			6	18.3	10.4	Ø 4
		20 25 32				10 20 30 40 50	04		12	4	19.3	8.2	Ø 3
							06			6	20.5	10.4	Ø 4.5
							08		16	8	23.5	13.2	Ø 6
		40 50				10 20 30 50	06	A14	12	6	20.5	10.4	Ø 4.5
							08		16	8	23.5	13.2	Ø 6

*1 N: NBR, S: Silicone rubber, U: Urethane rubber, F: FKM, GN: Conductive NBR, GS: Conductive silicone rubber
*2 Indicates the minimum hole size of the adapter or vacuum pad

Dimensions/Models

With buffer/barb fitting Ø 10 to Ø 50

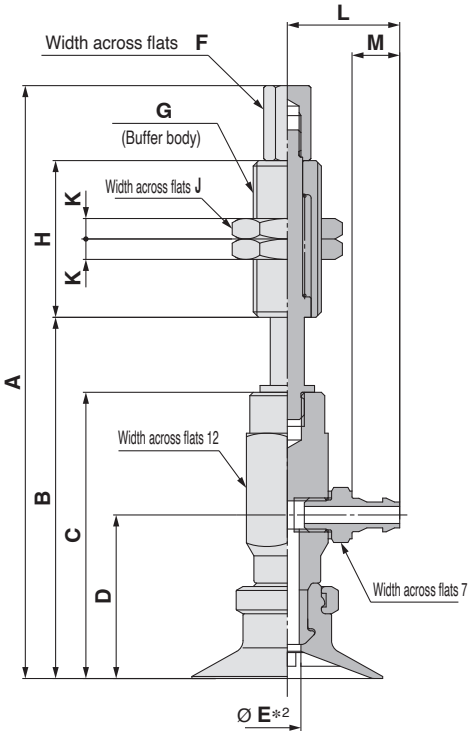

Construction	p. 118
Buffer Assembly	p. 105

ZPY 10 C N J 10 - N4 - A10

❶ ❷ ❹

Buffer specification ❸

J	Rotating
K	Non-rotating

❻ Connection thread (Male thread)

A10	M10 x 1
A14	M14 x 1

❺ Vacuum inlet (Barb fitting)

N4	For Ø 4 nylon tubing	M-5AN-4
N6	For Ø 6 nylon tubing	M-5AN-6
U4	For Ø 4 soft tubing	M-5AU-4
U6	For Ø 6 soft tubing	M-5AU-6

Model									A	B	C	D	*2 E	F	G	H	J	K
	Vacuum inlet direction	❶ Pad dia.	Form	❷ *1 Material	❸ Buffer spec.	❹ Buffer stroke	❺ Vacuum inlet	❻ Connection thread										
ZP	Y	10 13	C	N S U F GN GS	J K	10	N4 N6 U4 U6	A10	83	49	38	22	2.5	6	M10 x 1	23	14	3
						20			121	59						51		
						30			131	69								
						40			167	79						77		
						50			177	89								
		16				10			83.5	49.5	38.5	22.5				23		
						20			121.5	59.5						51		
						30			131.5	69.5								
						40			167.5	79.5						77		
						50			177.5	89.5								
		20 25				10			87	53	42	24	3.5	6	M10 x 1	23	14	3
						20			125	63						51		
						30			135	73								
						40			171	83						77		
						50			181	93								
		32				10			87.5	53.5	42.5	24.5				23		
						20			125.5	63.5						51		
						30			135.5	73.5								
						40			171.5	83.5						77		
						50			181.5	93.5								
		40				10	N6 U6	A14	126.5	58.5	46.5	28.5	6	10	M14 x 1	50	19	4
						20			123.5	68.5								
						30			133.5	78.5								
						50			178.5	98.5						75		
		50				10			127.5	59.5	47.5	29.5				50		
						20			124.5	69.5								
						30			134.5	79.5								
						50			179.5	99.5						75		

Dimensions Per Vacuum Inlet

Model									L	M	Fitting part min. hole size
	Vacuum inlet direction	❶ Pad dia.	Form	❷ *1 Material	❸ Buffer spec.	❹ Buffer stroke	❺ Vacuum inlet	❻ Connection thread			
ZP	Y	10 13 16 20 25 32	C	N S U F GN GS	J K	10 20 30 40 50	N4 U4	A10	14.5	5	Ø 1.8
							N6 U6		16.5	7	Ø 2.5
		40 50					N6 U6	A14	16.5	7	Ø 2.5

*1 N: NBR, S: Silicone rubber, U: Urethane rubber, F: FKM, GN: Conductive NBR, GS: Conductive silicone rubber
*2 Indicates the minimum hole size of the adapter or vacuum pad

Basic Pad
Flat Type Ball Joint Type
ZP Series

How to Order

		Dimensions/ Models	Construction	Mounting Bracket Assembly
Pad unit	ZP 10 F N	p. 39	p. 119	p. 106
With adapter	ZP T 10 F N – B5 – A8	From p. 39	p. 119	p. 106
With buffer	ZP T 10 F N J 10 – B5 – A10	From p. 42	p. 120	From p. 108

∗ Pad unit's sales unit: 10 pcs. (Pad diameter: Ø 20 mm or less only)

❶ ❷ ❸ ❹ ❺ ❻ ❼

● Ball joint type

❶ Vacuum inlet direction

T	Vertical
R	Lateral (With One-touch fitting)

❷ Pad diameter

10	Ø 10
13	Ø 13
16	Ø 16
20	Ø 20
25	Ø 25
32	Ø 32
40	Ø 40
50	Ø 50

❺ Buffer stroke

Stroke [mm]	Pad diameter [mm]	
	Ø 10 to Ø 16	Ø 20 to Ø 50
10	●	●
20	●	●
30	●	●
40	●	—
50	●	●

Width across flats

❸ Material

N	NBR
S	Silicone rubber∗1 ∗2
U	Urethane rubber
F	FKM
GN	Conductive NBR
GS	Conductive silicone rubber

❹ Buffer specification

J	Rotating
K	Non-rotating

∗1 Uses a material compliant with a dissolution test of the FDA (U.S. Food and Drug Administration) regulation 21CFR§177.2600 for "Rubber articles intended for repeated use."

∗2 Uses a material compliant with the standards for "Rubber apparatus (excluding baby drinking apparatus) and containers/packaging" (D3) (Partial revision: Japanese Ministry of Health, Labour, and Welfare Notification No. 595, 2012) in Section 3 "Apparatus and Containers/Packaging" of the Japan Food Sanitation Act, Article 18 "Specifications and Standards for Food and Food Additives, etc." (Japanese Ministry of Health and Welfare Notification No. 370, 1959)

With adapter

❻ Vacuum inlet/ ❼ Connection thread

○: ZPT/Vertical ●: ZPR/Lateral (With One-touch fitting)

❻ Vacuum inlet			❼ Connection thread			Pad diameter [mm]		
Type	Symbol	Size	Type	Symbol	Size	Ø 10 to Ø 16	Ø 20 to Ø 32	Ø 40, Ø 50
Female thread	B5	M5 x 0.8	Male thread	A8	M8 x 1	○	—	—
				A10	M10 x 1	—	○	—
				A14	M14 x 1	—	—	○
—	—	—∗1	Female thread	B5	M5 x 0.8	○	○	—
				B8	M8 x 1.25	—	○	○
				B01	Rc1/8	—	○	○
				N01	NPT1/8	—	○	○
				T01	NPTF1/8	—	○	○
One-touch fitting	04	Ø 4		B5	M5 x 0.8	●	—	—
	06	Ø 6				●	●	●
				B8	M8 x 1.25	—	●	●
	08	Ø 8		B5	M5 x 0.8	—	●	●
				B8	M8 x 1.25	—	●	●

∗1 Use the connection thread.

With buffer

❻ Vacuum inlet

○: ZPT/Vertical ●: ZPR/Lateral (With One-touch fitting)

Type	Symbol	Size	Pad diameter [mm]		
			Ø 10 to Ø 16	Ø 20 to Ø 32	Ø 40, Ø 50
Female thread	B5	M5 x 0.8	○	—	—
	B01	Rc1/8	—	○	○
	N01	NPT1/8	—	○	○
	T01	NPTF1/8	—	○	○
One-touch fitting	04	Ø 4	○●	—	—
	06	Ø 6	○●	○●	○●
	08	Ø 8	—	○●	○●

❼ Connection thread ○: ZPT/Vertical ●: ZPR/Lateral

Type	Symbol	Size	Pad diameter [mm]		
			Ø 10 to Ø 16	Ø 20 to Ø 32	Ø 40, Ø 50
Male thread	A10	M10 x 1	○●	—	—
	A14	M14 x 1	—	○●	○●

Lock ring unit

Part no.	Pad diameter [mm]
ZPLF	Ø 40, Ø 50

∗ The following parts are shipped together with the product (unassembled).
- Mounting nut for the types with an adapter or a buffer
- Buffer for the type with a buffer (Vacuum inlet: Vertical)

Dimensions/Models

Single unit Ø 10 to Ø 50

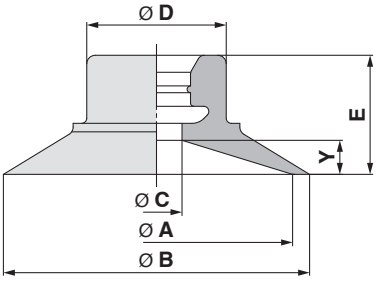

Construction	p. 119
Mounting Bracket Assembly	p. 106

ZP 10 F N
❶ ❷

Model ❶ Pad dia.	Form	❷ *1 Material	A	B	C	D	E	Y
ZP 10	F	N S U F GN GS	10	12	3	8.2	6.5	1.5
13			13	15			7	2
16			16	18				
20			20	22	4	10.2	8.5	3
25			25	28				
32			32	35			9	
40			40	43	10	26	13	5
50			50	53	8		14	6

*1 N: NBR, S: Silicone rubber, U: Urethane rubber, F: FKM, GN: Conductive NBR, GS: Conductive silicone rubber

With adapter Ø 10 to Ø 50

ZPT 10 F N - B5 - A8
❶ ❷ ❸ ❹

❸ Vacuum inlet (Female thread)

B5	M5 x 0.8

❹ Connection thread (Male thread)

A8	M8 x 1
A10	M10 x 1
A14	M14 x 1

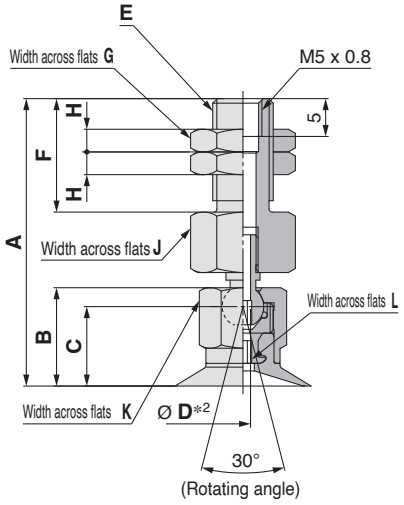

Ø 10 to Ø 32

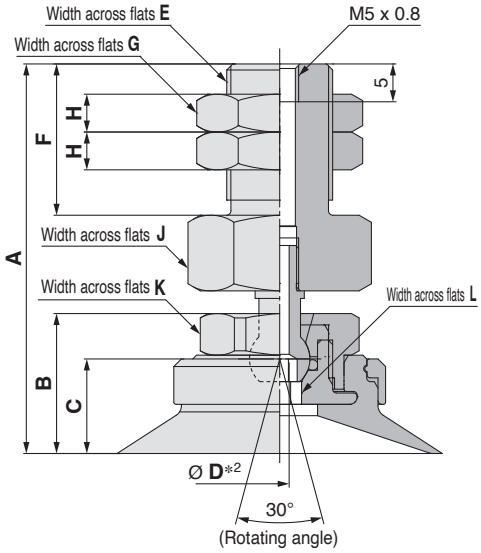

Ø 40, Ø 50

Model Vacuum inlet direction	❶ Pad dia.	Form	❷ *1 Material	❸ Vacuum inlet	❹ Connection thread	A	B	C	*2 D	E	F	G	H	J	K	L
ZP T	10	F	N S U F GN GS	B5	A8	37.5	12.5	10	2	M8 x 1	15	12	4	12	10	2
	13 16					38	13	10.5								
	20 25				A10	48.5	15.5	12.5	2	M10 x 1	20	14	3	16	12	3
	32					49	16	13								
	40				A14	51.5	18.5	12.5	2.5	M14 x 1	20	19	4	21	19	5
	50					52.5	19.5	13.5								

*1 N: NBR, S: Silicone rubber, U: Urethane rubber, F: FKM, GN: Conductive NBR, GS: Conductive silicone rubber
*2 Indicates the minimum hole size of the adapter or vacuum pad

Construction	p. 119
Adapter Assembly	p. 106

Dimensions/Models

With adapter Ø 10 to Ø 50

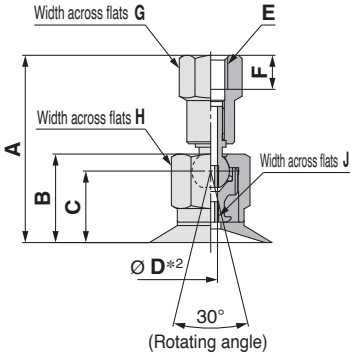

Ø 10 to Ø 32

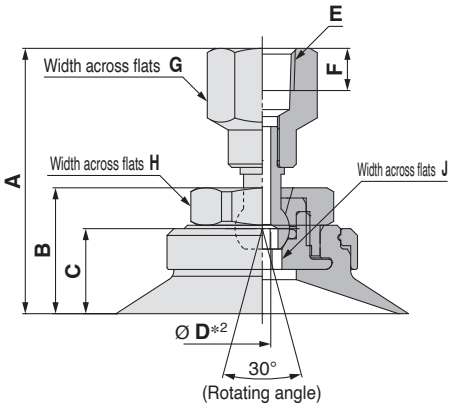

Ø 40, Ø 50

Construction p. 119
Adapter Assembly p. 106

ZPT 10 F N - B5
❶ ❷ ❸

❸ **Connection thread (Female thread)**

B5	M5 x 0.8
B8	M8 x 1.25
B01	Rc1/8
N01	NPT1/8
T01	NPTF1/8

Model						A	B	C	D*2	E	F	G	H	J
	Vacuum inlet direction	❶ Pad dia.	Form	❷ *1 Material	❸ Connection thread									
ZP	T	10	F	N S U F GN GS	B5	27	12.5	10	2	M5 x 0.8	5	8	10	2
		13 16				27.5	13	10.5						
		20 25				32	15.5	12.5				9	12	3
		32				32.5	16	13						
		20 25			B8	36	15.5	12.5	2	M8 x 1.25	8	12	12	3
		32				36.5	16	13						
		40				39	18.5	12.5	2.5				19	5
		50				40	19.5	13.5						
		20 25			B01 N01 T01	36	15.5	12.5	2	Rc1/8 NPT1/8 NPTF1/8		14	12	3
		32				36.5	16	13						
		40				39	18.5	12.5	2.5				19	5
		50				40	19.5	13.5						

*1 N: NBR, S: Silicone rubber, U: Urethane rubber, F: FKM, GN: Conductive NBR, GS: Conductive silicone rubber
*2 Indicates the minimum hole size of the adapter or vacuum pad

Dimensions/Models

With adapter/One-touch fitting Ø 10 to Ø 50

ZPR 10 F N - 04 - B5

❶ ❷ ❸ ❹

❸ **Vacuum inlet (One-touch fitting)**

04	Ø 4
06	Ø 6
08	Ø 8

❹ **Connection thread (Female thread)**

B5	M5 x 0.8
B8	M8 x 1.25

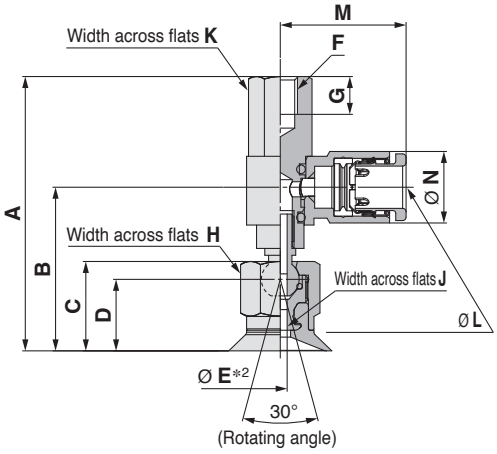

Ø 10 to Ø 32

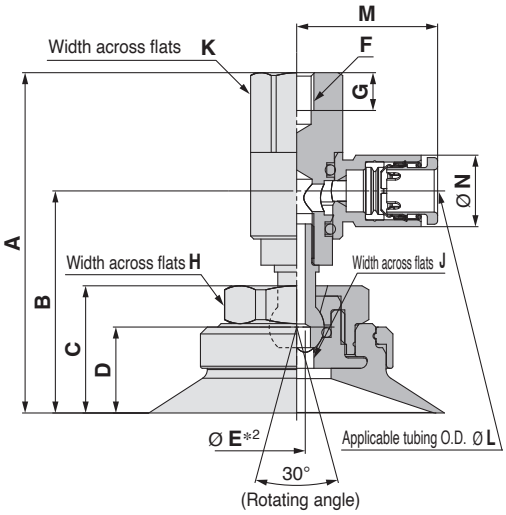

Ø 40, Ø 50

Construction	p. 119
Adapter Assembly	p. 107

Model							A	B	C	D	E*2	F	G	H	J
	Vacuum inlet direction	❶ Pad dia.	Form	❷ Material*1	❸ Vacuum inlet	❹ Connection thread									
ZP	R	10	F	N S U F GN GS	04 06 08	B5	39.5	23.4	12.5	10	2	M5 x 0.8	5.5	10	2
		13 16					40	23.9	13	10.5					
		20 25					46.5	29.3	15.5	12.5			5.5	12	3
		32					47	29.8	16	13					
		40					49.5	32.3	18.5	12.5	2.5			19	5
		50					50.5	33.3	19.5	13.5					
		20 25				B8	46.5	29.3	15.5	12.5	2	M8 x 1.25	8.5	12	3
		32					47	29.8	16	13					
		40					49.5	32.3	18.5	12.5	2.5			19	5
		50					50.5	33.3	19.5	13.5					

Dimensions Per Vacuum Inlet

Model							K	L	M	N	Fitting part min. hole size
	Vacuum inlet direction	❶ Pad dia.	Form	❷ Material*1	❸ Vacuum inlet	❹ Connection thread					
ZP	R	10 13 16	F	N S U F GN GS	04	B5	8	4	17.5	8.2	Ø 2.5
					06			6	18.3	10.4	Ø 4
		20 25 32 40 50			06	B5 B8	12	6	20.5	10.4	Ø 4.5
					08		16	8	23.5	13.2	Ø 6

*1 N: NBR, S: Silicone rubber, U: Urethane rubber, F: FKM, GN: Conductive NBR, GS: Conductive silicone rubber

*2 Indicates the minimum hole size of the adapter or vacuum pad

Dimensions/Models

With buffer Ø 10 to Ø 50

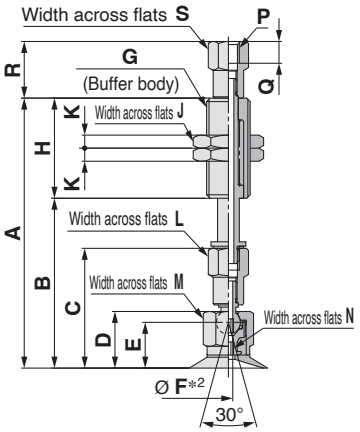

Ø 10 to Ø 32

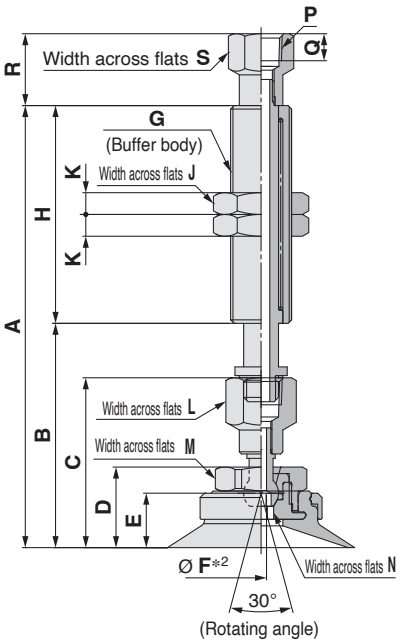

Ø 40, Ø 50

ZPT 10 F N J 10 - B5 - A10

❶ ❷ ❸ ❹ ❺ ❻

❸ Buffer specification

J	Rotating
K	Non-rotating

❻ Connection thread (Male thread)

A10	M10 x 1
A14	M14 x 1

❺ Vacuum inlet

			Pad diameter Ø 10 to Ø 16	Pad diameter Ø 20 to Ø 50 (10 st only)
B5	M5 x 0.8	Female thread		
B01	Rc1/8	Female thread		
N01	NPT1/8	Female thread		
T01	NPTF1/8	Female thread		
04	Ø 4	One-touch fitting	KQ2H04-M5N	
06	Ø 6	One-touch fitting	KQ2H06-M5N	KQ2H06-01NS
08	Ø 8	One-touch fitting		KQ2H08-01NS

Model																												
	Vacuum inlet direction	❶ Pad dia.	Form	❷ *1 Material	❸ Buffer spec.	❹ Buffer stroke	❺ Vacuum inlet	❻ Connection thread	A	B	C	D	E	*2 F	G	H	J	K	L	M	N	P	Q	R	S
ZP	T	10	F	N S U F GN GS	J K	10	B5	A10	61.5	38.5	27	12.5	10	2	M10 x 1	23	14	3	8	10	2	M5 x 0.8	5	13	8
						20			99.5	48.5						51									
						30			109.5	58.5															
						40			145.5	68.5						77									
						50			155.5	78.5															
		13 16				10			62	39	27.5	13	10.5			23									
						20			100	49						51									
						30			110	59															
						40			146	69						77									
						50			156	79															
		20 25				10	B01 N01 T01	A14	98.5	48.5	36	15.5	12.5	2	M14 x 1	50	19	4	12	12	3	Rc1/8 NPT1/8 NPTF1/8		16.5	13
						20			108.5	58.5														12	
						30			118.5	68.5															
						50			163.5	88.5						75									
		32				10			99	49	36.5	16	13			50								16.5	
						20			109	59														12	
						30			119	69															
						50			164	89						75									
		40				10			101.5	51.5	39	18.5	12.5	2.5		50				19	5			16.5	
						20			111.5	61.5														12	
						30			121.5	71.5															
						50			166.5	91.5						75									
		50				10			102.5	52.5	40	19.5	13.5			50								16.5	
						20			112.5	62.5														12	
						30			122.5	72.5															
						50			167.5	92.5						75									

Vacuum inlet: One-touch fitting

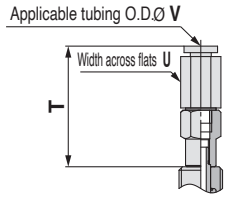

Vacuum inlet: Built-in One-touch fitting
Pad diameter: Ø 20 to Ø 50 (Buffer stroke: 20 to 50 st)

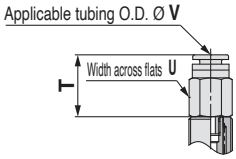

Dimensions Per Vacuum Inlet: One-touch Fitting

Model									T	U	V	Fitting part min. hole size
	Vacuum inlet direction	❶ Pad dia.	Form	❷ *1 Material	❸ Buffer spec.	❹ Buffer stroke	❺ Vacuum inlet	❻ Connection thread				
ZP	T	10 13 16	F	N S U F GN GS	J K	10 20 30 40 50	04	A10	27.7	8	4	Ø 2.5
							06			10	6	
		20 25 32 40 50				10	06	A14	31.8	10	6	Ø 4.5
							08		35.9	14	8	Ø 6
						20 30 50	06		19.9	12	6	Ø 3
							08		24.9	14	8	

*1 N: NBR, S: Silicone rubber, U: Urethane rubber, F: FKM, GN: Conductive NBR, GS: Conductive silicone rubber

*2 Indicates the minimum hole size of the adapter or vacuum pad

Construction p. 120
Buffer Assembly p. 108

Dimensions/Models

With buffer/One-touch fitting Ø 10 to Ø 50

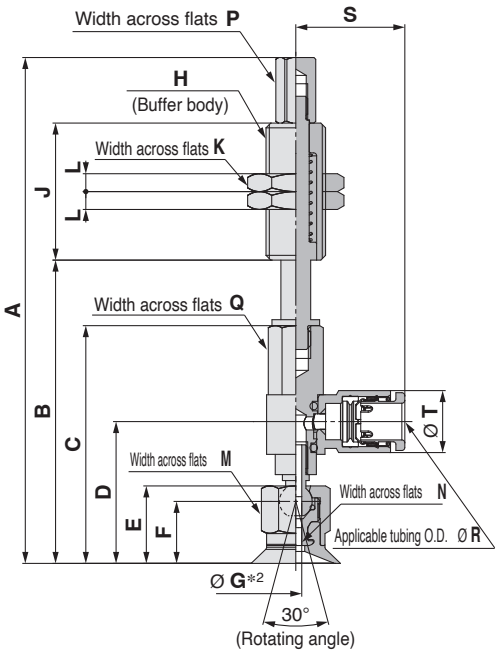

Ø 10 to Ø 32

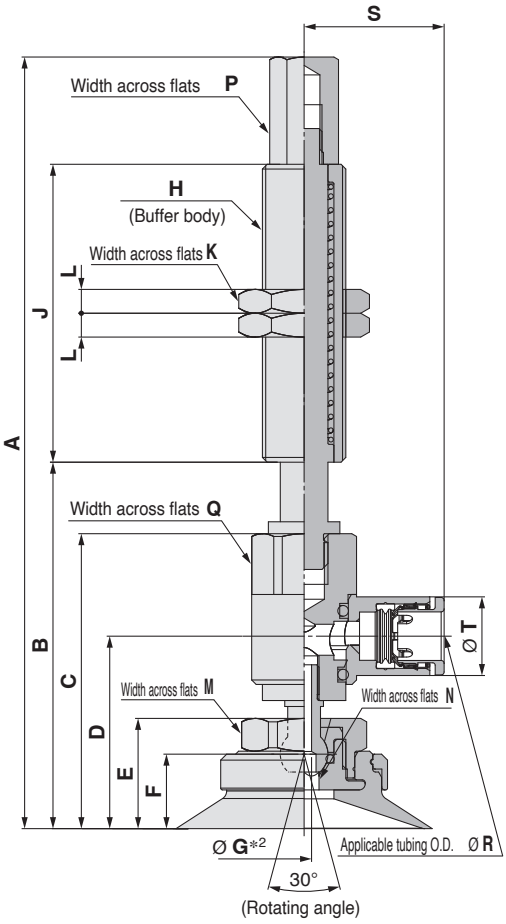

Ø 40, Ø 50

ZPR 10 F N J 10 - 04 - A10

❶ ❷ ❸ ❹ ❺ ❻

❸ Buffer specification

J	Rotating
K	Non-rotating

❻ Connection thread (Male thread)

A10	M10 x 1
A14	M14 x 1

❺ Vacuum inlet (One-touch fitting)

04	Ø 4
06	Ø 6
08	Ø 8

Model									A	B	C	D	E	F	*2 G	H	J	K	L	M	N	P
	Vacuum inlet direction	❶ Pad dia.	Form	❷ *1 Material	❸ Buffer spec.	❹ Buffer stroke	❺ Vacuum inlet	❻ Connection thread														
ZP	R	10	F	N S U F GN GS	J K	10	04 06	A10	84.5	50.5	39.5	23.4	12.5	10	2	M10 x1	23	14	3	10	2	6
						20			122.5	60.5							51					
						30			132.5	70.5												
						40			168.5	80.5							77					
						50			178.5	90.5												
		13 16				10			85	51	40	23.9	13	10.5			23					
						20			123	61							51					
						30			133	71												
						40			169	81							77					
						50			179	91												
		20 25				10	06 08	A14	126.5	58.5	46.5	29.3	15.5	12.5	2	M14 x1	50	19	4	12	3	10
						20			123.5	68.5												
						30			133.5	78.5												
						50			178.5	98.5							75					
		32				10			127	59	47	29.8	16	13			50					
						20			124	69												
						30			134	79												
						50			179	99							75					
		40				10			129.5	61.5	49.5	32.3	18.5	12.5	2.5		50			19	5	
						20			126.5	71.5												
						30			136.5	81.5												
						50			181.5	101.5							75					
		50				10			130.5	62.5	50.5	33.3	19.5	13.5			50					
						20			127.5	72.5												
						30			137.5	82.5												
						50			182.5	102.5							75					

Dimensions Per Vacuum Inlet: One-touch Fitting

Model									Q	R	S	T	Fitting part min. hole size
	Vacuum inlet direction	❶ Pad dia.	Form	❷ *1 Material	❸ Buffer spec.	❹ Buffer stroke	❺ Vacuum inlet	❻ Connection thread					
ZP	R	10 13 16	F	N S U F GN GS	J K	10 20 30 40 50	04	A10	8	4	17.5	8.2	Ø 2.5
							06			6	18.3	10.4	Ø 4
		20 25 32 40 50				10	06	A14	12	6	20.5	10.4	Ø 4.5
							08		16	8	23.5	13.2	Ø 6
						20 30 50	06		12	6	20.5	10.4	Ø 4.5
							08		16	8	23.5	13.2	Ø 6

*1 N: NBR, S: Silicone rubber, U: Urethane rubber, F: FKM, GN: Conductive NBR, GS: Conductive silicone rubber

*2 Indicates the minimum hole size of the adapter or vacuum pad

Construction p. 120
Buffer Assembly p. 109

Basic Pad
Bellows Type
ZP Series

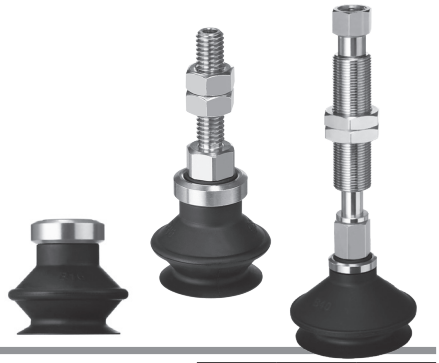

How to Order

		Dimensions/ Models	Construction	Mounting Bracket Assembly
Pad unit	ZP□ 06 B N – □	p. 45	p. 94 p. 96	p. 100
With adapter	ZP□ T 06 B N – A5 – □	From p. 46	p. 94 p. 96	p. 100
With buffer	ZP T 06 B N J 6 – B3 – A8	From p. 57	p. 95 p. 97	From p. 103

❶ ❷ ❸ ❹ ❺ ❻ ❼ ❽ ❾

• Bellows type

❶ Adapter (Lock ring) material

—	Brass
S*1	Stainless steel (Stainless steel 304)

*1 Only applicable to the pad unit (with lock ring) and the pad with adapter (Vacuum inlet direction: Vertical (Option "T"))

❷ Vacuum inlet direction

—	Pad unit
T	Vertical
R	Lateral (With One-touch fitting)
Y	Lateral (With barb fitting)

❸ Pad diameter

06	Ø 6	20	Ø 20
08	Ø 8	25	Ø 25
10	Ø 10	32	Ø 32
13	Ø 13	40	Ø 40
16	Ø 16	50	Ø 50

❹ Material

N	NBR
S	Silicone rubber*1 *2
U	Urethane rubber
F	FKM
GN	Conductive NBR
GS	Conductive silicone rubber

*1 Uses a material compliant with a dissolution test of the FDA (U.S. Food and Drug Administration) regulation 21CFR§177.2600 for "Rubber articles intended for repeated use."

*2 Uses a material compliant with the standards for "Rubber apparatus (excluding baby drinking apparatus) and containers/packaging" (D 3) (Partial revision: Japanese Ministry of Health, Labour, and Welfare Notification No. 595, 2012) in Section 3 "Apparatus and Containers/Packaging" of the Japan Food Sanitation Act, Article 18 "Specifications and Standards for Food and Food Additives, etc." (Japanese Ministry of Health and Welfare Notification No. 370, 1959)

❺ Buffer specification

J	Rotating
K	Non-rotating
JN*1	Rotating (Without buffer plate)
KN*1	Non-rotating (Without buffer plate)

*1 Only for pad diameters Ø 6 and Ø 8

❻ Buffer stroke

Stroke [mm]	Pad diameter [mm]									
	Ø 6	Ø 8	Ø 10	Ø 13	Ø 16	Ø 20	Ø 25	Ø 32	Ø 40	Ø 50
6	●	●	—	—	—	—	—	—	—	—
10	●	●	●	●	●	●	●	●	●	●
15	●	●	—	—	—	—	—	—	—	—
20	—	—	●	●	●	●	●	●	●	●
25	●	●	—	—	—	—	—	—	—	—
30	—	—	●	●	●	●	●	●	●	●
40	—	—	●	●	●	●	●	●	—	—
50	—	—	●	●	●	●	●	●	●	●

With adapter

❼ Vacuum inlet

○: ZP□T/Vertical ●: ZPR/Lateral (With One-touch fitting) △: ZPY/Lateral (With barb fitting)

Type	Symbol	Size	Pad diameter [mm]			
			Ø 6, Ø 8	Ø 10 to Ø 16	Ø 20 to Ø 32	Ø 40, Ø 50
Male thread	A5	M5 x 0.8	○*1	—	—	—
	AS5		—	○*1	○*1	—
	A6	M6 x 1	○*1	—	—	—
	AS6		—	○*1	○*1	○*1
	AG01	G1/8	—	○*1	○*1	—
	AG02	G1/4	—	—	—	○*1
Female thread	—	M3 x 0.5	—	○ (❻Connection thread: A5/A6)	○ (❻Connection thread: A6)	○ (❻Connection thread: A6)
		M5 x 0.8	—	—	○ (❻Connection thread: A8)	○ (❻Connection thread: A8)
	B4	M4 x 0.7	○*1	—	—	—
	B5	M5 x 0.8	○*1	○*1	○*1	—
	B6	M6 x 1	—	○*1	○*1	○*1
	B8	M8 x 1.25	—	—	○*1	○*1
	BG01	G1/8	—	○*1	○*1	—
	BG02	G1/4	—	—	—	○*1
	B01	Rc1/8	—	○*1	○*1	○*1
	N01*4	NPT1/8	—	○*1	○*1	○*1
	T01*4	NPTF1/8	—	○*1	○*1	○*1
One-touch fitting	04	Ø 4	●	●	●	—
	06	Ø 6	●	●	●	●
	08	Ø 8	—	—	●	●
Barb fitting	N4	For Ø 4 nylon tubing*2	△	△	△	—
	N6	For Ø 6 nylon tubing*2	△	△	△	△
	U4	For Ø 4 soft tubing*3	△	△	△	—
	U6	For Ø 6 soft tubing*3	△	△	△	△

*1 Use the connection thread. *2 Nylon tube piping *3 Soft nylon/Polyurethane tube piping

❽ Connection thread

○: ZP□T/Vertical ●: ZPR/Lateral (With One-touch fitting) △: ZPY/Lateral (With barb fitting)

Type	Symbol	Size	Pad diameter [mm]			
			Ø 6, Ø 8	Ø 10 to Ø 16	Ø 20 to Ø 32	Ø 40, Ø 50
Male thread*1	A5	M5 x 0.8	●△	○*2●△	—	—
	A6	M6 x 1	●△	○*2●△	○*2●△	○*2●△
	A8	M8 x 1	—	—	○*2●△	○*2●△
Female thread	B4	M4 x 0.7	●△	—	—	—
	B5	M5 x 0.8	●△	●△	●△	—
	B6	M6 x 1	—	●△	●△	●△
	B8	M8 x 1.25	—	—	●△	●△

*1 The mounting nut is shipped together with the product (unassembled). *2 ○: ZP□T/Vertical comes with a vacuum inlet (female thread).

With buffer

❼ Vacuum inlet

○: ZPT/Vertical ●: ZPR/Lateral (With One-touch fitting) △: ZPY/Lateral (With barb fitting)

Type	Symbol	Size	Pad diameter [mm]			
			Ø 6, Ø 8	Ø 10 to Ø 16	Ø 20 to Ø 32	Ø 40, Ø 50
Female thread	B3	M3 x 0.5	○	—	—	—
	B5	M5 x 0.8	○	○	○	○
	B01	Rc1/8	—	—	—	○
	N01	NPT1/8	—	—	—	○
	T01	NPTF1/8	—	—	—	○
One-touch fitting	04	Ø 4	○●	○●	○●	—
	06	Ø 6	○●	○●	○●	○●
	08	Ø 8	—	—	●	○●
Barb fitting	N4	For Ø 4 nylon tubing*1	○△	△	△	—
	N6	For Ø 6 nylon tubing*1	△	○△	○△	○△
	U4	For Ø 4 soft tubing*2	○△	△	△	—
	U6	For Ø 6 soft tubing*2	△	○△	○△	○△

*1 Nylon tube piping *2 Soft nylon/Polyurethane tube piping

❽ Connection thread

○: ZPT/Vertical ●: ZPR/Lateral (With One-touch fitting) △: ZPY/Lateral (With barb fitting)

Type	Symbol	Size	Pad diameter [mm]			
			Ø 6, Ø 8	Ø 10 to Ø 16	Ø 20 to Ø 32	Ø 40, Ø 50
Male thread*1	A8	M8 x 1	○●△	—	—	—
	A10	M10 x 1	—	○●△	○●△	—
	A14	M14 x 1	—	—	—	○●△

*1 The mounting nut, buffer plate, and ○: ZPT/Vertical buffer are shipped together with the product (unassembled).

❾ Lock ring

Symbol	Pad diameter [mm]	
	Ø 6, Ø 8	Ø 10 to Ø 50
—	None*1	With lock ring
X19		Without lock ring

*1 The lock ring cannot be used for pad diameters Ø 6 and Ø 8.

Lock ring unit

Part no.	Pad diameter [mm]
ZP□L1	Ø 10 to Ø 16
ZP□L2	Ø 20 to Ø 32
ZP□L3	Ø 40, Ø 50

□: —/Brass S/Stainless steel

* The pad unit lock ring is shipped together with the product (unassembled).

Dimensions/Models

Single unit Ø 6 to Ø 8

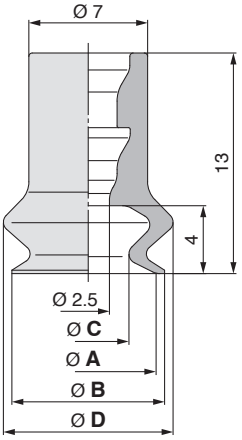

Construction p. 94
Mounting Bracket Assembly p. 100

ZP 06 B N
❶ ❷

Model ❶ Pad dia.	Form	❷ *1 Material	A	B	C	D
06	B	N S U F GN GS	6	7	3.4	9
08			8	9	4.8	10

*1 N: NBR, S: Silicone rubber, U: Urethane rubber, F: FKM, GN: Conductive NBR, GS: Conductive silicone rubber

Single unit Ø 10 to Ø 50

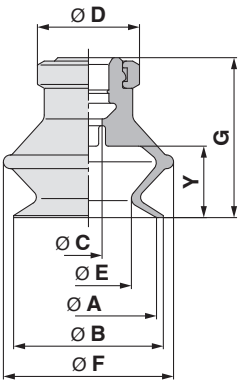

Construction p. 96
Mounting Bracket Assembly p. 100

ZP □ 10 B N
❶ ❷ ❸

❶ Lock ring material

—	Brass
S	Stainless steel (Stainless steel 304)

Model ❶ Lock ring material	❷ Pad dia.	Form	❸ *1 Material	A	B	C	D	E	F	G	Y
— S	10	B	N S U F GN GS	10	12	4	13	5.5	13.5	16	5.5
	13			13	15			8.7	19	18.5	7.5
	16			16	18			10	21	20	8.5
	20			20	22		15	12.6	25	23.5	10.5
	25			25	27			16	28	24	
	32			32	34			18.9	37	29	14
	40			40	43	7	18	24.4	47	34	16
	50			50	53			33.4	57	38	19

*1 N: NBR, S: Silicone rubber, U: Urethane rubber, F: FKM, GN: Conductive NBR, GS: Conductive silicone rubber

Dimensions/Models

With adapter Ø 6 to Ø 8

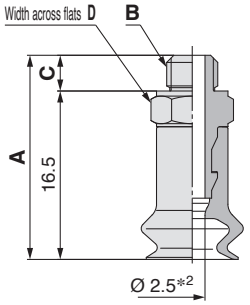

Construction	p. 94
Adapter Assembly	p. 100

ZP □ T 06 B N - A5
❶ ❷ ❸ ❹

❶ Adapter material

—	Brass
S	Stainless steel (Stainless steel 304)

❹ Vacuum inlet (Male thread)

A5	M5 x 0.8
A6	M6 x 1

Model							A	B	C	D
	❶ Adapter material	Vacuum inlet direction	❷ Pad dia.	Form	❸ Material *1	❹ Vacuum inlet				
ZP	— S	T	06 08	B	N S U F GN GS	A5	20	M5 x 0.8	3.5	7
						A6	21	M6 x 1	4.5	8

*1 N: NBR, S: Silicone rubber, U: Urethane rubber, F: FKM, GN: Conductive NBR, GS: Conductive silicone rubber
*2 Indicates the minimum hole size of the adapter or vacuum pad

With adapter Ø 10 to Ø 50

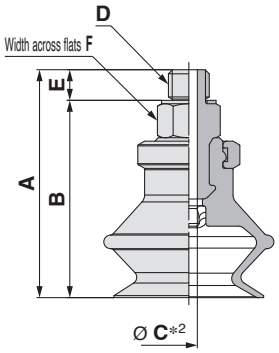

Construction	p. 96
Adapter Assembly	p. 100

ZP □ T 10 B N - AS5
❶ ❷ ❸ ❹

❶ Adapter (Lock ring) material

—	Brass
S	Stainless steel (Stainless steel 304)

❹ Vacuum inlet (Male thread)

AS5	M5 x 0.8
AS6	M6 x 1
AG01	G1/8
AG02	G1/4

Model							A	B	C*2	D	E	F
	❶ Adapter material	Vacuum inlet direction	❷ Pad dia.	Form	❸ Material *1	❹ Vacuum inlet						
ZP	— S	T	10	B	N S U F GN GS	AS5	25	21.5	2.5	M5 x 0.8	3.5	8
			13				27.5	24				
			16				29	25.5				
			20				32.5	29				
			25				33	29.5				
			32				38	34.5				
			10			AS6	26	21.5	2.5	M6 x 1	4.5	8
			13				28.5	24				
			16				30	25.5				
			20				33.5	29				
			25				34	29.5				
			32				39	34.5				
			40				45	40.5				12
			50				49	44.5				
			10			AG01	34	28.5	2.5	G1/8	5.5	17
			13				36.5	31				
			16				38	32.5				
			20				41.5	36	4			
			25				42	36.5				
			32				47	41.5				
			40			AG02	54.5	48	7	G1/4	6.5	21
			50				58.5	52				

*1 N: NBR, S: Silicone rubber, U: Urethane rubber, F: FKM, GN: Conductive NBR, GS: Conductive silicone rubber
*2 Indicates the minimum hole size of the adapter or vacuum pad

Dimensions/Models

With adapter Ø 10 to Ø 50

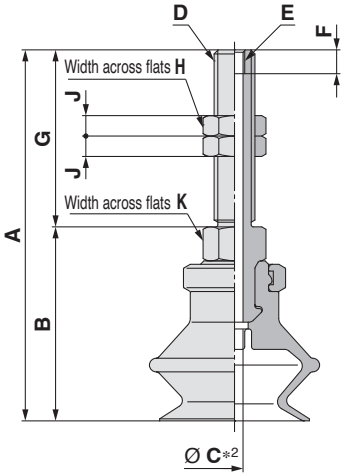

Construction	p. 96
Adapter Assembly	p. 100

ZP □ T 10 B N - A5
❶ ❷ ❸ ❹

❶ Adapter (Lock ring) material

—	Brass
S	Stainless steel (Stainless steel 304)

❹ Connection thread (Male thread)

A5	M5 x 0.8 (M3 x 0.5 With female thread)
A6	M6 x 1 (M3 x 0.5 With female thread)
A8	M8 x 1 (M5 x 0.8 With female thread)

Model							A	B	C*2	D	E	F	G	H	J	K
	❶ Adapter material	Vacuum inlet direction	❷ Pad dia.	Form	❸ Material *1	❹ Connection thread										
ZP	— S	T	10	B	N S U F GN GS	A5	42	21	2.5	M5 x 0.8	M3 x 0.5	3.5	21	8	4	8
			13				44.5	23.5								
			16				46	25								
			10			A6	47	21	2.5	M6 x 1	M3 x 0.5	3.5	26	8	4	8
			13				49.5	23.5								
			16				51	25								
			20				54.5	28.5								
			25				55	29								
			32				60	34								
			40				66	40								12
			50				70	44								
			20			A8	49.5	33.5	4	M8 x 1	M5 x 0.8	5	16	12	4	12
			25				50	34								
			32				55	39								
			40				56	40	4.2							
			50				60	44								

*1 N: NBR, S: Silicone rubber, U: Urethane rubber, F: FKM, GN: Conductive NBR, GS: Conductive silicone rubber
*2 Indicates the minimum hole size of the adapter or vacuum pad

Dimensions/Models

With adapter Ø 6 to Ø 8

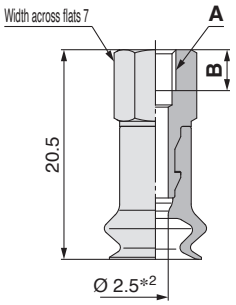

Construction p. 94
Adapter Assembly p. 100

ZP □ T 06 B N - B4
❶ ❷ ❸ ❹

❶ Adapter material

—	Brass
S	Stainless steel (Stainless steel 304)

❹ Vacuum inlet (Female thread)

B4	M4 x 0.7
B5	M5 x 0.8

Model							A	B
	❶ Adapter material	Vacuum inlet direction	❷ Pad dia.	Form	❸ Material *1	❹ Vacuum inlet		
ZP	— / S	T	06 / 08	B	N / S / U / F / GN / GS	B4	M4 x 0.7	4
						B5	M5 x 0.8	5

*1 N: NBR, S: Silicone rubber, U: Urethane rubber, F: FKM, GN: Conductive NBR, GS: Conductive silicone rubber
*2 Indicates the minimum hole size of the adapter or vacuum pad

With adapter Ø 10 to Ø 50

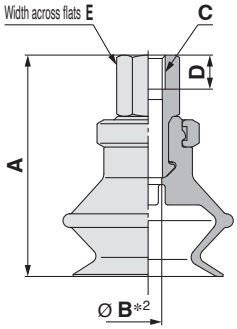

Construction p. 96
Adapter Assembly p. 100

ZP □ T 10 B N - B5
❶ ❷ ❸ ❹

❶ Adapter (Lock ring) material

—	Brass
S	Stainless steel (Stainless steel 304)

❹ Vacuum inlet (Female thread)

B5	M5 x 0.8	BG02	G1/4
B6	M6 x 1	B01	Rc1/8
B8	M8 x 1.25	N01*1	NPT1/8
BG01	G1/8	T01*1	NPTF1/8

*1 Not compatible with stainless steel materials

Model							A	B*2	C	D	E
	❶ Adapter material	Vacuum inlet direction	❷ Pad dia.	Form	❸ Material *1	❹ Vacuum inlet					
ZP	— / S	T	10	B	N / S / U / F / GN / GS	B5	25	2.5	M5 x 0.8	5	8
			13				27.5				
			16				29				
			20				32.5	4			
			25				33				
			32				38				
			10			B6	25	2.5	M6 x 1	6	8
			13				27.5				
			16				29				
			20				32.5	4			
			25				33				
			32				38				
			40				47.5	4.9			12
			50				51.5				
			20			B8	38.5	3.5	M8 x 1.25	8	12
			25				39				
			32				44				
			40				47.5	6.6			
			50				51.5				
			10			BG01	31	2.5	G1/8	7.4	14
			13				33.5				
			16				35				
			20				38.5	4			
			25				39				
			32				44				
			40			BG02	53.5	7	G1/4	11	17
			50				57.5				
			10			B01 / N01*3 / T01*3	31	2.5	Rc1/8 / NPT1/8 / NPTF1/8	—	12
			13				33.5				
			16				35				
			20				38.5	3.5			
			25				39				
			32				44				
			40				47.5	7			
			50				51.5				

*1 N: NBR, S: Silicone rubber, U: Urethane rubber, F: FKM, GN: Conductive NBR, GS: Conductive silicone rubber
*2 Indicates the minimum hole size of the adapter or vacuum pad
*3 Not compatible with stainless steel materials

Dimensions/Models

With adapter/One-touch fitting Ø 6 to Ø 8

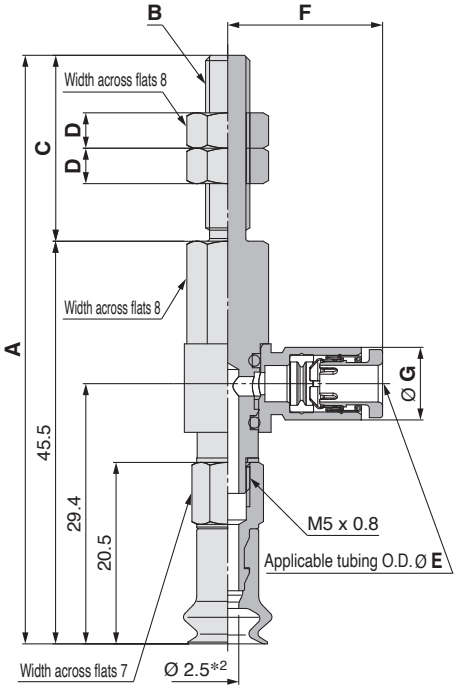

Construction p. 94
Adapter Assembly p. 101

ZPR 06 B N - 04 - A5

❶ ❷ ❸ ❹

❸ Vacuum inlet (One-touch fitting)

04	Ø 4
06	Ø 6

❹ Connection thread (Male thread)

A5	M5 x 0.8
A6	M6 x 1

Model							A	B	C	D
	Vacuum inlet direction	❶ Pad dia.	Form	❷ Material *1	❸ Vacuum inlet	❹ Connection thread				
ZP	R	06 08	B	N S U F GN GS	04 06	A5	66.5	M5 x 0.8	21	4
						A6	71.5	M6 x 1	26	4

Dimensions Per Vacuum Inlet

Model							E	F	G	Fitting part min. hole size
	Vacuum inlet direction	❶ Pad dia.	Form	❷ Material *1	❸ Vacuum inlet	❹ Connection thread				
ZP	R	06 08	B	N S U F GN GS	04	A5 A6	4	17.5	8.2	Ø 2.5
					06		6	18.3	10.4	Ø 4

*1 N: NBR, S: Silicone rubber, U: Urethane rubber, F: FKM, GN: Conductive NBR, GS: Conductive silicone rubber
*2 Indicates the minimum hole size of the adapter or vacuum pad

Dimensions/Models

With adapter/One-touch fitting Ø 10 to Ø 50

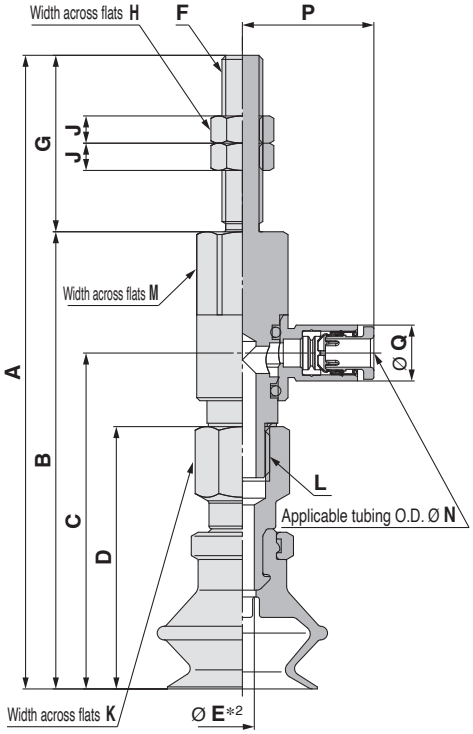

Construction p. 96
Adapter Assembly p. 101

ZPR 10 B N - 04 - A5

❶ ❷ ❸ ❹

❸ **Vacuum inlet (One-touch fitting)**

04	Ø 4
06	Ø 6
08	Ø 8

❹ **Connection thread (Male thread)**

A5	M5 x 0.8
A6	M6 x 1
A8	M8 x 1

Model							A	B	C	D	*2 E	F	G	H	J	K	L
	Vacuum inlet direction	❶ Pad dia.	Form	❷ *1 Material	❸ Vacuum inlet	❹ Connection thread											
ZP	R	10	B	N S U F GN GS	04 06 08	A5	71	50	33.9	25	2.5	M5 x 0.8	21	8	4	8	M5 x 0.8
		13					73.5	52.5	36.4	27.5							
		16					75	54	37.9	29							
		10				A6	76	50	33.9	25	2.5	M6 x 1	26	8	4	8	M5 x 0.8
		13					78.5	52.5	36.4	27.5							
		16					80	54	37.9	29							
		20					93	67.1	49.3	38.5	3.5		25.9			12	M8 x 1.25
		25					93.5	67.6	49.8	39							
		32					98.5	72.6	54.8	44							
		40					102	76.1	58.3	47.5	4						
		50					106	80.1	62.3	51.5							
		20				A8	83	67.1	49.3	38.5	3.5	M8 x 1	15.9	12	4	12	M8 x 1.25
		25					83.5	67.6	49.8	39							
		32					88.5	72.6	54.8	44							
		40					92	76.1	58.3	47.5	4						
		50					96	80.1	62.3	51.5							

Dimensions Per Vacuum Inlet

Model							M	N	P	Q	Fitting part min. hole size
	Vacuum inlet direction	❶ Pad dia.	Form	❷ *1 Material	❸ Vacuum inlet	❹ Connection thread					
ZP	R	10 13 16	B	N S U F GN GS	04	A5 A6	8	4	17.5	8.2	Ø 2.5
					06			6	18.3	10.4	Ø 4
		20 25 32			04	A6 A8	12	4	19.3	8.2	Ø 3
					06			6	20.5	10.4	Ø 4.5
					08		16	8	23.5	13.2	Ø 6
		40 50			06	A6 A8	12	6	20.5	10.4	Ø 4.5
					08		16	8	23.5	13.2	Ø 6

*1 N: NBR, S: Silicone rubber, U: Urethane rubber, F: FKM, GN: Conductive NBR, GS: Conductive silicone rubber
*2 Indicates the minimum hole size of the adapter or vacuum pad

Dimensions/Models

With adapter/One-touch fitting Ø 6 to Ø 8

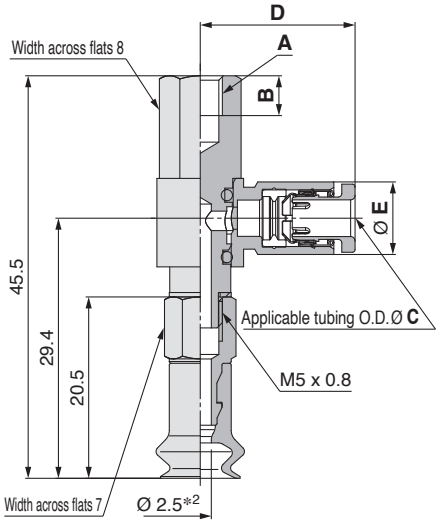

Construction	p. 94
Adapter Assembly	p. 101

ZPR 06 B N - 04 - B4

❶ ❷ ❸ ❹

❸ Vacuum inlet (One-touch fitting)

04	Ø 4
06	Ø 6

❹ Connection thread (Female thread)

B4	M4 x 0.7
B5	M5 x 0.8

Model							A	B
	Vacuum inlet direction	❶ Pad dia.	Form	❷ Material *1	❸ Vacuum inlet	❹ Connection thread		
ZP	R	06 08	B	N S U F GN GS	04 06	B4	M4 x 0.7	4.5
						B5	M5 x 0.8	5.5

Dimensions Per Vacuum Inlet

Model							C	D	E	Fitting part min. hole size
	Vacuum inlet direction	❶ Pad dia.	Form	❷ Material *1	❸ Vacuum inlet	❹ Connection thread				
ZP	R	06 08	B	N S U F GN GS	04	B4 B5	4	17.5	8.2	Ø 2.5
					06		6	18.3	10.4	Ø 4

*1 N: NBR, S: Silicone rubber, U: Urethane rubber, F: FKM, GN: Conductive NBR, GS: Conductive silicone rubber

*2 Indicates the minimum hole size of the adapter or vacuum pad

Dimensions/Models

With adapter/One-touch fitting Ø 10 to Ø 50

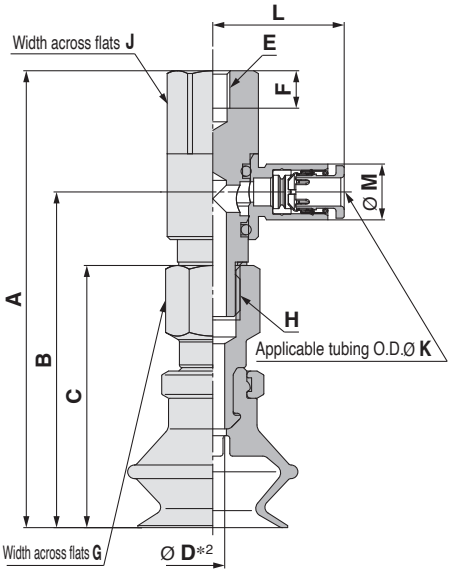

Construction p. 96
Adapter Assembly p. 101

ZPR 10 B N - 04 - B5
❶ ❷ ❸ ❹

❹ **Connection thread (Female thread)**

B5	M5 x 0.8
B6	M6 x 1
B8	M8 x 1.25

❸ **Vacuum inlet (One-touch fitting)**

04	Ø 4
06	Ø 6
08	Ø 8

Model							A	B	C	D*2	E	F	G	H
	Vacuum inlet direction	❶ Pad dia.	Form	❷ *1 Material	❸ Vacuum inlet	❹ Connection thread								
ZP	R	10	B	N S U F GN GS	04 06 08	B5	50	33.9	25	2.5	M5 x 0.8	5.5	8	M5 x 0.8
		13					52.5	36.4	27.5					
		16					54	37.9	29					
		20					67.1	49.3	38.5	3.5			12	M8 x 1.25
		25					67.6	49.8	39					
		32					72.6	54.8	44					
		10				B6	50	33.9	25	2.5	M6 x 1	6.5	8	M5 x 0.8
		13					52.5	36.4	27.5					
		16					54	37.9	29					
		20					67.1	49.3	38.5	3.5			12	M8 x 1.25
		25					67.6	49.8	39					
		32					72.6	54.8	44					
		40					76.1	58.3	47.5	4				
		50					80.1	62.3	51.5					
		20				B8	67.1	49.3	38.5	3.5	M8 x 1.25	8.5	12	M8 x 1.25
		25					67.6	49.8	39					
		32					72.6	54.8	44					
		40					76.1	58.3	47.5	4				
		50					80.1	62.3	51.5					

Dimensions Per Vacuum Inlet

Model							J	K	L	M	Fitting part min. hole size
	Vacuum inlet direction	❶ Pad dia.	Form	❷ *1 Material	❸ Vacuum inlet	❹ Connection thread					
ZP	R	10 13 16	B	N S U F GN GS	04	B5 B6	8	4	17.5	8.2	Ø 2.5
					06			6	18.3	10.4	Ø 4
		20 25 32			04	B5 B6 B8	12	4	19.3	8.2	Ø 3
					06			6	20.5	10.4	Ø 4.5
					08		16	8	23.5	13.2	Ø 6
		40 50			06	B6 B8	12	6	20.5	10.4	Ø 4.5
					08		16	8	23.5	13.2	Ø 6

*1 N: NBR, S: Silicone rubber, U: Urethane rubber, F: FKM, GN: Conductive NBR, GS: Conductive silicone rubber
*2 Indicates the minimum hole size of the adapter or vacuum pad

Dimensions/Models

With adapter/barb fitting Ø 6 to Ø 8

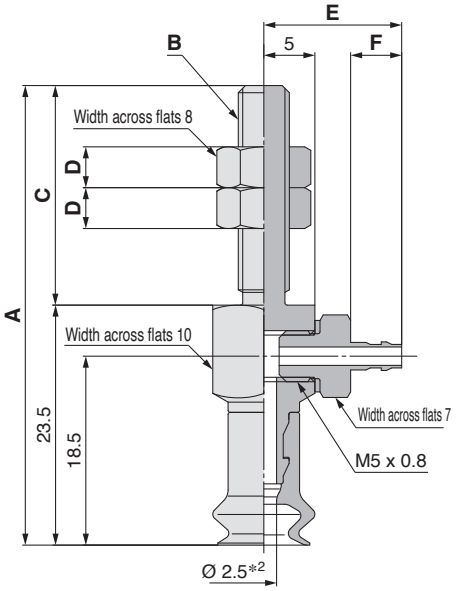

Construction	p. 94
Adapter Assembly	p. 102

ZPY 06 B N - N4 - A5

❶ ❷ ❸ ❹

❹ Connection thread (Male thread)

A5	M5 x 0.8
A6	M6 x 1

Vacuum inlet ❸ (Barb fitting)

N4	For Ø 4 nylon tubing	M-5AN-4
N6	For Ø 6 nylon tubing	M-5AN-6
U4	For Ø 4 soft tubing	M-5AU-4
U6	For Ø 6 soft tubing	M-5AU-6

Model							A	B	C	D
	Vacuum inlet direction	❶ Pad dia.	Form	❷ Material *1	❸ Vacuum inlet	❹ Connection thread				
ZP	Y	06 08	B	N S U F GN GS	N4 N6 U4 U6	A5	45	M5 x 0.8	21.5	4
						A6	50.5	M6 x 1	27	4

Dimensions Per Vacuum Inlet

Model							E	F	Fitting part min. hole size
	Vacuum inlet direction	❶ Pad dia.	Form	❷ Material *1	❸ Vacuum inlet	❹ Connection thread			
ZP	Y	06 08	B	N S U F GN GS	N4 U4	A5 A6	13.5	5	Ø 1.8
					N6 U6		15.5	7	Ø 2.5

*1 N: NBR, S: Silicone rubber, U: Urethane rubber, F: FKM, GN: Conductive NBR, GS: Conductive silicone rubber

*2 Indicates the minimum hole size of the adapter or vacuum pad

Dimensions/Models

With adapter/barb fitting Ø 10 to Ø 50

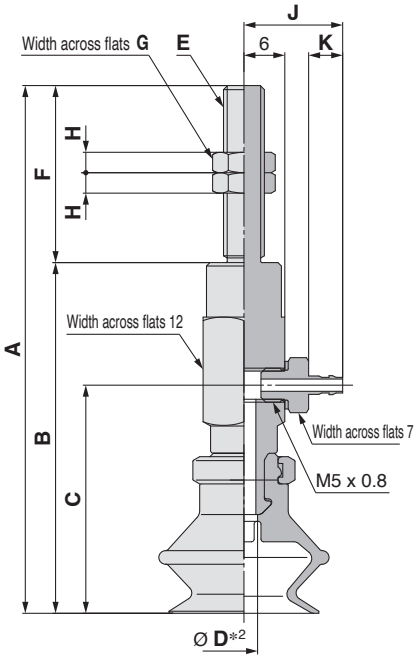

Construction	p. 96
Adapter Assembly	p. 102

ZPY 10 B N - N4 - A5

❶ ❷ ❸ ❹

❹ Connection thread (Male thread)

A5	M5 x 0.8
A6	M6 x 1
A8	M8 x 1

❸ Vacuum inlet (Barb fitting)

N4	For Ø 4 nylon tubing	M-5AN-4
N6	For Ø 6 nylon tubing	M-5AN-6
U4	For Ø 4 soft tubing	M-5AU-4
U6	For Ø 6 soft tubing	M-5AU-6

Model							A	B	C	D*2	E	F	G	H
	Vacuum inlet direction	❶ Pad dia.	Form	❷ Material *1	❸ Vacuum inlet	❹ Connection thread								
ZP	Y	10	B	N S U F GN GS	N4 N6 U4 U6	A5	63	42	26	2.5	M5 x 0.8	21	8	4
		13					65.5	44.5	28.5					
		16					67	46	30					
		10				A6	68	42	26	2.5	M6 x 1	26	8	4
		13					70.5	44.5	28.5					
		16					72	46	30					
		20					77.5	51.5	33.5	3.5				
		25					78	52	34					
		32					83	57	39					
		40					88	62	44	6				
		50					92	66	48					
		20				A8	67.5	51.5	33.5	3.5	M8 x 1	16	12	4
		25					68	52	34					
		32					73	57	39					
		40					78	62	44	6				
		50					82	66	48					

Dimensions Per Vacuum Inlet

Model							J	K	Fitting part min. hole size
	Vacuum inlet direction	❶ Pad dia.	Form	❷ Material *1	❸ Vacuum inlet	❹ Connection thread			
ZP	Y	10 13 16 20 25 32	B	N S U F GN GS	N4 U4	A5 A6	14.5	5	Ø 1.8
					N6 U6		16.5	7	Ø 2.5
		40 50			N6 U6	A6 A8	16.5	7	Ø 2.5

*1 N: NBR, S: Silicone rubber, U: Urethane rubber, F: FKM, GN: Conductive NBR, GS: Conductive silicone rubber
*2 Indicates the minimum hole size of the adapter or vacuum pad

Dimensions/Models

With adapter/barb fitting Ø 6 to Ø 8

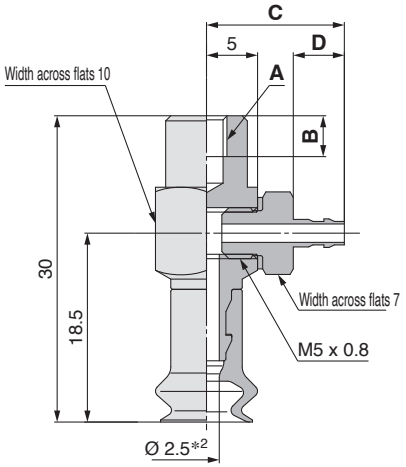

Construction	p. 94
Adapter Assembly	p. 102

ZPY 06 B N - N4 - B4

❶ ❷ ❸ ❹

Vacuum inlet ❸ (Barb fitting)

N4	For Ø 4 nylon tubing	M-5AN-4
N6	For Ø 6 nylon tubing	M-5AN-6
U4	For Ø 4 soft tubing	M-5AU-4
U6	For Ø 6 soft tubing	M-5AU-6

❹ Connection thread (Female thread)

B4	M4 x 0.7
B5	M5 x 0.8

Model							A	B
	Vacuum inlet direction	❶ Pad dia.	Form	❷ Material *1	❸ Vacuum inlet	❹ Connection thread		
ZP	Y	06 08	B	N S U F GN GS	N4 N6 U4 U6	B4	M4 x 0.7	4
						B5	M5 x 0.8	5

Dimensions Per Vacuum Inlet

Model							C	D	Fitting part min. hole size
	Vacuum inlet direction	❶ Pad dia.	Form	❷ Material *1	❸ Vacuum inlet	❹ Connection thread			
ZP	Y	06 08	B	N S U F GN GS	N4 U4	B4 B5	13.5	5	Ø 1.8
					N6 U6		15.5	7	Ø 2.5

*1 N: NBR, S: Silicone rubber, U: Urethane rubber, F: FKM, GN: Conductive NBR, GS: Conductive silicone rubber
*2 Indicates the minimum hole size of the adapter or vacuum pad

Dimensions/Models

With adapter/barb fitting Ø 10 to Ø 50

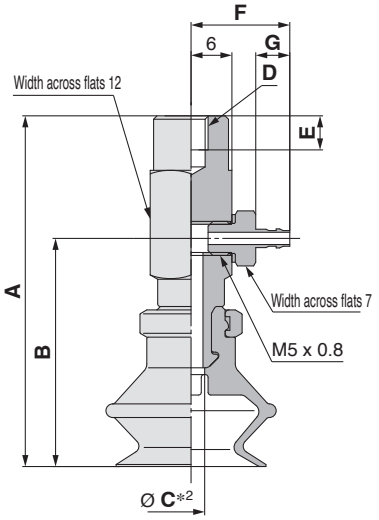

Construction	p. 96
Adapter Assembly	p. 102

ZPY 10 B N - N4 - B5

❶ ❷ ❸ ❹

❸ **Vacuum inlet (Barb fitting)**

N4	For Ø 4 nylon tubing	M-5AN-4
N6	For Ø 6 nylon tubing	M-5AN-6
U4	For Ø 4 soft tubing	M-5AU-4
U6	For Ø 6 soft tubing	M-5AU-6

❹ **Connection thread (Female thread)**

B5	M5 x 0.8
B6	M6 x 1
B8	M8 x 1.25

Model							A	B	C*2	D	E
	Vacuum inlet direction	❶ Pad dia.	Form	❷ Material*1	❸ Vacuum inlet	❹ Connection thread					
ZP	Y	10	B	N S U F GN GS	N4 N6 U4 U6	B5	42	26	2.5	M5 x 0.8	5
		13					44.5	28.5			
		16					46	30			
		20					51.5	33.5	3.5		
		25					52	34			
		32					57	39			
		10				B6	42	26	2.5	M6 x 1	6
		13					44.5	28.5			
		16					46	30			
		20					51.5	33.5	3.5		
		25					52	34			
		32					57	39			
		40					62	44	6		
		50					66	48			
		20				B8	51.5	33.5	3.5	M8 x 1.25	8
		25					52	34			
		32					57	39			
		40					62	44	6		
		50					66	48			

Dimensions Per Vacuum Inlet

Model							F	G	Fitting part min. hole size
	Vacuum inlet direction	❶ Pad dia.	Form	❷ Material*1	❸ Vacuum inlet	❹ Connection thread			
ZP	Y	10 13 16	B	N S U F GN GS	N4 U4	B4 B5	14.5	5	Ø 1.8
					N6 U6		16.5	7	Ø 2.5
		20 25 32			N4 U4	B5 B6 B8	14.5	5	Ø 1.8
					N6 U6		16.5	7	Ø 2.5
		40 50			N6 U6	B6 B8	16.5	7	Ø 2.5

*1 N: NBR, S: Silicone rubber, U: Urethane rubber, F: FKM, GN: Conductive NBR, GS: Conductive silicone rubber
*2 Indicates the minimum hole size of the adapter or vacuum pad

Dimensions/Models

With buffer Ø 6 to Ø 8

The drawings show the type with a buffer plate.

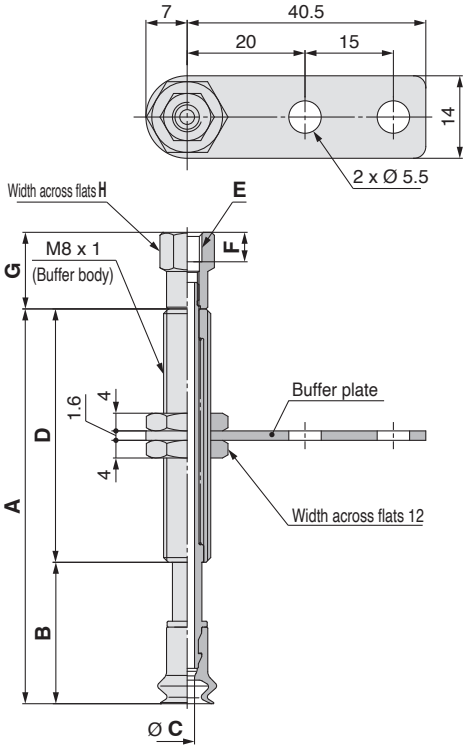

Vacuum inlet: One-touch fitting

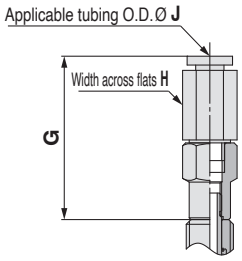

Vacuum inlet: Barb fitting

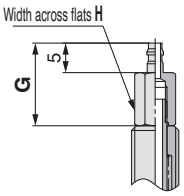

Construction	p. 116
Buffer Assembly	p. 103

ZPT 06 B N J 6 - B3 - A8

❶ ❷ ❸ ❹ ❺ ❻

❸ Buffer specification

J	Rotating
K	Non-rotating
JN	Rotating (Without buffer plate)
KN	Non-rotating (Without buffer plate)

❻ Connection thread (Male thread)

A8	M8 x 1

❺ Vacuum inlet

B3	M3 x 0.5	Female thread	
B5	M5 x 0.8		
04	Ø 4	One-touch fitting	KQ2H04-M5N
06	Ø 6		KQ2H06-M5N
N4	For Ø 4 nylon tubing	Barb fitting	
U4	For Ø 4 soft tubing		

Model									A	B	C*2	D
	Vacuum inlet direction	❶ Pad dia.	Form	❷ *1 Material	❸ Buffer spec.	❹ Buffer stroke	❺ Vacuum inlet	❻ Connection thread				
ZP	T	06 08	B	N S U F GN GS	J K JN KN	6	B3 B5 04 06 N4 U4	A8	34	19	J: 2.5 K: 2	15
						10			67	24		43
						15			72	29		
						25			82	39		

Dimensions Per Vacuum Inlet: Female Thread

Model									E	F	G	H
	Vacuum inlet direction	❶ Pad dia.	Form	❷ *1 Material	❸ Buffer spec.	❹ Buffer stroke	❺ Vacuum inlet	❻ Connection thread				
ZP	T	06 08	B	N S U F GN GS	J K JN KN	6 10 15 25	B3	A8	M3 x 0.5	3	11	6
							B5		M5 x 0.8	5	13	8

Dimensions Per Vacuum Inlet: One-touch Fitting

Model									G	H	J	Fitting part min. hole size
	Vacuum inlet direction	❶ Pad dia.	Form	❷ *1 Material	❸ Buffer spec.	❹ Buffer stroke	❺ Vacuum inlet	❻ Connection thread				
ZP	T	06 08	B	N S U F GN GS	J K JN KN	6 10 15 25	04	A8	27.7	8	4	Ø 2.5
							06			10	6	

Dimensions Per Vacuum Inlet: Barb Fitting

Model									G	H	Fitting part min. hole size
	Vacuum inlet direction	❶ Pad dia.	Form	❷ *1 Material	❸ Buffer spec.	❹ Buffer stroke	❺ Vacuum inlet	❻ Connection thread			
ZP	T	06 08	B	N S U F GN GS	J K JN KN	6 10 15 25	N4	A8	14	6	Ø 1.8
							U4				

*1 N: NBR, S: Silicone rubber, U: Urethane rubber, F: FKM, GN: Conductive NBR, GS: Conductive silicone rubber

*2 Indicates the minimum hole size of the adapter or vacuum pad

Dimensions/Models

With buffer Ø 10 to Ø 50

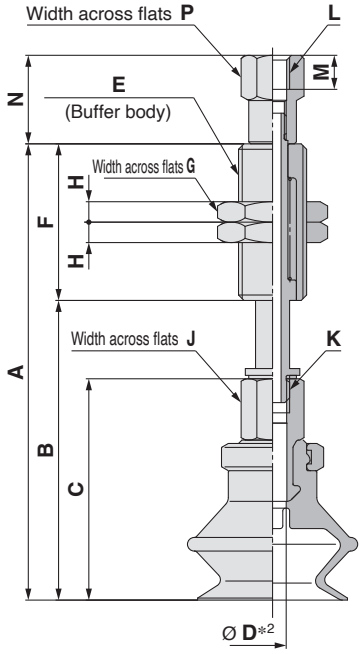

Construction p. 118
Buffer Assembly p. 103

ZPT 10 B N J 10 - B5 - A10

❶ ❷ ❸ ❹ ❺ ❻

Buffer specification ❸

J	Rotating
K	Non-rotating

❺ Vacuum inlet (Female thread)

B5	M5 x 0.8
B01	Rc1/8
N01	NPT1/8
T01	NPTF1/8

❻ Connection thread (Male thread)

A10	M10 x 1
A14	M14 x 1

Model									A	B	C	D*2	E	F	G	H	J	K
	Vacuum inlet direction	❶ Pad dia.	Form	❷ *1 Material	❸ Buffer spec.	❹ Buffer stroke	❺ Vacuum inlet	❻ Connection thread										
ZP	T	10	B	N S U F GN GS	J K	10	B5 04 06 N6 U6	A10	59.5	36.5	25	J: 2.5 K: 2	M10 x 1	23	14	3	8	M5 x 0.8
						20			97.5	46.5				51				
						30			107.5	56.5								
						40			143.5	66.5				77				
						50			153.5	76.5								
		13				10			62	39	27.5			23				
						20			100	49				51				
						30			110	59								
						40			146	69				77				
						50			156	79								
		16				10			63.5	40.5	29			23				
						20			101.5	50.5				51				
						30			111.5	60.5								
						40			147.5	70.5				77				
						50			157.5	80.5								
		20				10			67	44	32.5			23				
						20			105	54				51				
						30			115	64								
						40			151	74				77				
						50			161	84								
		25				10			67.5	44.5	33			23				
						20			105.5	54.5				51				
						30			115.5	64.5								
						40			151.5	74.5				77				
						50			161.5	84.5								
		32				10			72.5	49.5	38			23				
						20			110.5	59.5				51				
						30			120.5	69.5								
						40			156.5	79.5				77				
						50			166.5	89.5								
		40				10	B5 06 08 N6 U6	A14	110	60	47.5	4	M14 x 1	50	19	4	12	M8 x 1.25
						20			120	70								
						30			130	80								
						50			175	100				75				
		50				10			114	64	51.5			50				
						20			124	74								
						30			134	84								
						50			179	104				75				

Dimensions Per Vacuum Inlet: Female Thread

Model									L	M	N	P
	Vacuum inlet direction	❶ Pad dia.	Form	❷ *1 Material	❸ Buffer spec.	❹ Buffer stroke	❺ Vacuum inlet	❻ Connection thread				
ZP	T	10 13 16 20 25 32	B	N S U F GN GS	J K	10 20 30 40 50	B5	A10	M5 x 0.8	5	13	8
		40 50				10	B5	A14	M5 x 0.8	4.5	15	10
						20 30 50				5	9	
						10	B01 N01 T01		Rc1/8 NPT1/8 NPTF1/8	—	16.5	13
						20 30 50					12	

*1 N: NBR, S: Silicone rubber, U: Urethane rubber, F: FKM, GN: Conductive NBR, GS: Conductive silicone rubber

*2 Indicates the minimum hole size of the adapter or vacuum pad

Dimensions/Models

With buffer Ø 10 to Ø 50

ZPT 10 B N J 10 - 04 - A10

❶ ❷ ❹

Buffer specification ❸

J	Rotating
K	Non-rotating

❻ Connection thread (Male thread)

A10	M10 x 1
A14	M14 x 1

❺ Vacuum inlet

			Pad diameter: Ø 10 to Ø 32	Pad diameter: Ø 40, Ø 50 (10 st only)
04	Ø 4	One-touch fitting	KQ2H04-M5N	
06	Ø 6	One-touch fitting	KQ2H06-M5N	KQ2H06-01NS
08	Ø 8	One-touch fitting		KQ2H08-01NS
N6	For Ø 6 nylon tubing	Barb fitting		
U6	For Ø 6 soft tubing	Barb fitting		

Vacuum inlet: One-touch fitting

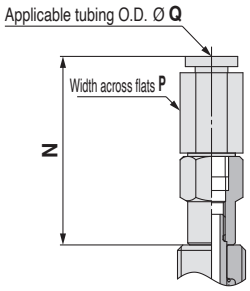

Vacuum inlet: Built-in One-touch fitting
Pad diameter: Ø 40, Ø 50 (Buffer stroke: 20 to 50 st)

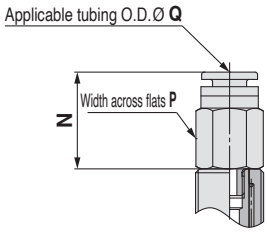

Vacuum inlet: Barb fitting

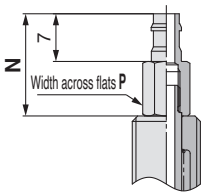

Dimensions Per Vacuum Inlet: One-touch Fitting

Model: Vacuum inlet direction	❶ Pad dia.	Form	❷ Material *1	❸ Buffer spec.	❹ Buffer stroke	❺ Vacuum inlet	❻ Connection thread	N	P	Q	Fitting part min. hole size
ZP T	10 13 16 20 25 32	B	N S U F GN GS	J K	10 20 30 40 50	04	A10	27.7	8	4	Ø 2.5
ZP T	10 13 16 20 25 32	B	N S U F GN GS	J K	10 20 30 40 50	06	A10	27.7	10	6	Ø 2.5
ZP T	40 50	B	N S U F GN GS	J K	10	06	A14	31.8	10	6	Ø 4.5
ZP T	40 50	B	N S U F GN GS	J K	10	08	A14	35.9	14	8	Ø 6
ZP T	40 50	B	N S U F GN GS	J K	20 30 50	06	A14	19.9	12	6	Ø 3
ZP T	40 50	B	N S U F GN GS	J K	20 30 50	08	A14	24.9	14	8	Ø 3

Dimensions Per Vacuum Inlet: Barb Fitting

Model: Vacuum inlet direction	❶ Pad dia.	Form	❷ Material *1	❸ Buffer spec.	❹ Buffer stroke	❺ Vacuum inlet	❻ Connection thread	N	P	Fitting part min. hole size
ZP T	10 13 16 20 25 32	B	N S U F GN GS	J K	10 20 30 40 50	N6	A10	15	6	Ø 2.5
ZP T	10 13 16 20 25 32	B	N S U F GN GS	J K	10 20 30 40 50	U6	A10	15	6	Ø 2.5
ZP T	40 50	B	N S U F GN GS	J K	10	N6	A14	19	10	Ø 2.5
ZP T	40 50	B	N S U F GN GS	J K	10	U6	A14	19	10	Ø 2.5
ZP T	40 50	B	N S U F GN GS	J K	20 30 50	N6	A14	12	10	Ø 2.5
ZP T	40 50	B	N S U F GN GS	J K	20 30 50	U6	A14	12	10	Ø 2.5

*1 N: NBR, S: Silicone rubber, U: Urethane rubber, F: FKM, GN: Conductive NBR, GS: Conductive silicone rubber

Construction p. 118
Buffer Assembly p. 103

Dimensions/Models

With buffer/One-touch fitting Ø 6 to Ø 8

The drawings show the type with a buffer plate.

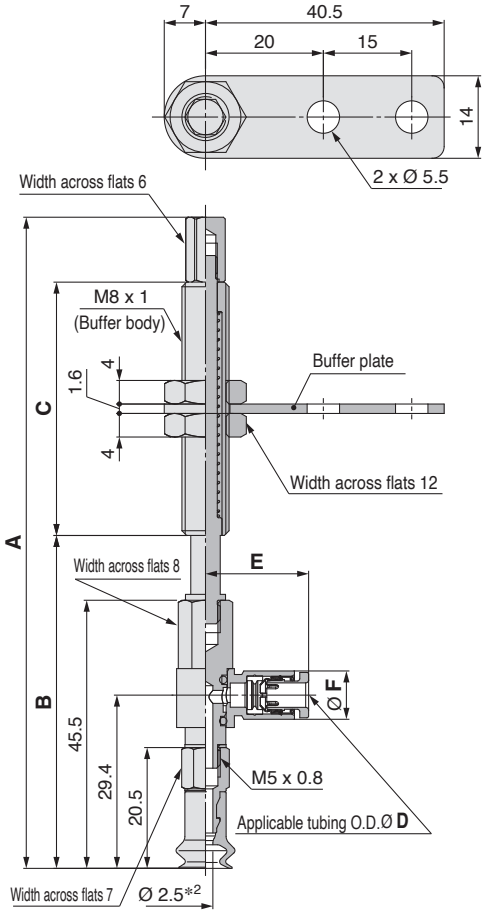

Construction p. 116
Buffer Assembly p. 104

ZPR 06 B N J 6 - 04 - A8

❶ ❷ ❸ ❹ ❺ ❻

❸ Buffer specification

J	Rotating
K	Non-rotating
JN	Rotating (Without buffer plate)
KN	Non-rotating (Without buffer plate)

❻ Connection thread (Male thread)

A8	M8 x 1

❺ Vacuum inlet (One-touch fitting)

04	Ø 4
06	Ø 6

Model									A	B	C
	Vacuum inlet direction	❶ Pad dia.	Form	❷ *1 Material	❸ Buffer spec.	❹ Buffer stroke	❺ Vacuum inlet	❻ Connection thread			
ZP	R	06 08	B	N S U F GN GS	J K JN KN	6	04 06	A8	79.5	53.5	15
						10			110.5	56.5	43
						15			115.5	61.5	
						25			125.5	71.5	

Dimensions Per Vacuum Inlet

Model									D	E	F	Fitting part min. hole size
	Vacuum inlet direction	❶ Pad dia.	Form	❷ *1 Material	❸ Buffer spec.	❹ Buffer stroke	❺ Vacuum inlet	❻ Connection thread				
ZP	R	06 08	B	N S U F GN GS	J K JN KN	6 10 15 25	04	A8	4	17.5	8.2	Ø 2.5
							06		6	18.3	10.4	Ø 4

*1 N: NBR, S: Silicone rubber, U: Urethane rubber, F: FKM, GN: Conductive NBR, GS: Conductive silicone rubber
*2 Indicates the minimum hole size of the adapter or vacuum pad

Dimensions/Models

With buffer/One-touch fitting Ø 10 to Ø 50

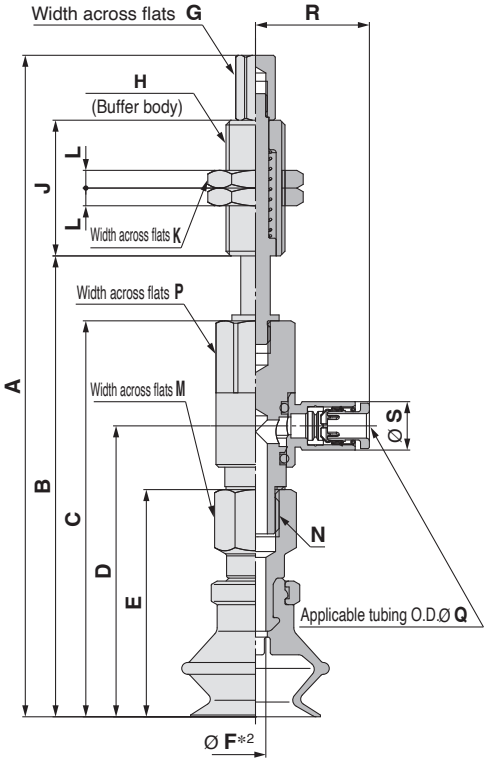

Construction	p. 118
Buffer Assembly	p. 104

ZPR 10 B N J 10 - 04 - A10

❶ ❷ ❹

Buffer specification ❸

J	Rotating
K	Non-rotating

❺ Vacuum inlet (One-touch fitting)

04	Ø 4
06	Ø 6
08	Ø 8

❻ Connection thread (Male thread)

A10	M10 x 1
A14	M14 x 1

Model									A	B	C	D	E	*2 F	G	H	J	K	L	M	N
	Vacuum inlet direction	❶ Pad dia.	Form	❷ *1 Material	❸ Buffer spec.	❹ Buffer stroke	❺ Vacuum inlet	❻ Connection thread													
ZP	R	10	B	N S U F GN GS	J K	10	04 06	A10	95	61	50	33.9	25	2.5	6	M10 x 1	23	14	3	8	M5 x 0.8
						20			133	71							51				
						30			143	81											
						40			179	91							77				
						50			189	101											
		13				10			97.5	63.5	52.5	36.4	27.5				23				
						20			135.5	73.5							51				
						30			145.5	83.5											
						40			181.5	93.5							77				
						50			191.5	103.5											
		16				10			99	65	54	37.9	29				23				
						20			137	75							51				
						30			147	85											
						40			183	95							77				
						50			193	105											
		20				10	04 06 08		112.1	78.1	67.1	49.3	38.5	3.5			23			12	M8 x 1.25
						20			150.1	88.1							51				
						30			160.1	98.1											
						40			196.1	108.1							77				
						50			206.1	118.1											
		25				10			112.6	78.6	67.6	49.8	39				23				
						20			150.6	88.6							51				
						30			160.6	98.6											
						40			196.6	108.6							77				
						50			206.6	118.6											
		32				10			117.6	83.6	72.6	54.8	44				23				
						20			155.6	93.6							51				
						30			165.6	103.6											
						40			201.6	113.6							77				
						50			211.6	123.6											
		40				10	06 08	A14	156.1	88.1	76.1	58.3	47.5	4	10	M14 x 1	50	19	4	12	M8 x 1.25
						20			153.1	98.1											
						30			163.1	108.1											
						50			208.1	128.1							75				
		50				10			160.1	92.1	80.1	62.3	51.5				50				
						20			157.1	102.1											
						30			167.1	112.1											
						50			212.1	132.1							75				

Dimensions Per Vacuum Inlet

Model									P	Q	R	S	Fitting part min. hole size
	Vacuum inlet direction	❶ Pad dia.	Form	❷ *1 Material	❸ Buffer spec.	❹ Buffer stroke	❺ Vacuum inlet	❻ Connection thread					
ZP	R	10 13 16	B	N S U F GN GS	J K	10 20 30 40 50	04	A10	8	4	17.5	8.2	Ø 2.5
							06			6	18.3	10.4	Ø 4
		20 25 32				10 20 30 40 50	04		12	4	19.3	8.2	Ø 3
							06			6	20.5	10.4	Ø 4.5
							08		16	8	23.5	13.2	Ø 6
		40 50				10 20 30 50	06	A14	12	6	20.5	10.4	Ø 4.5
							08		16	8	23.5	13.2	Ø 6

*1 N: NBR, S: Silicone rubber, U: Urethane rubber, F: FKM, GN: Conductive NBR, GS: Conductive silicone rubber

*2 Indicates the minimum hole size of the adapter or vacuum pad

Dimensions/Models

With buffer/barb fitting Ø 6 to Ø 8

The drawings show the type with a buffer plate.

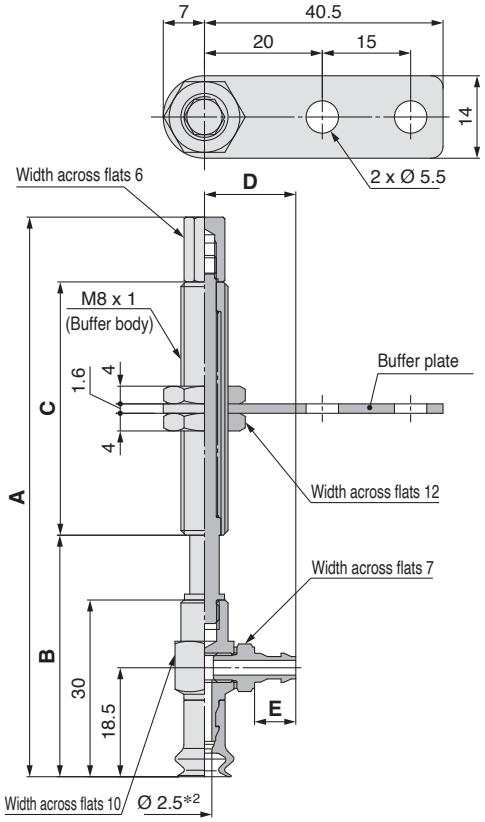

Construction p. 116
Buffer Assembly p. 105

ZPY 06 B N J 6 - N4 - A8

❶ ❷ ❹

Buffer specification ❸

J	Rotating
K	Non-rotating
JN	Rotating (Without buffer plate)
KN	Non-rotating (Without buffer plate)

❺ Vacuum inlet (Barb fitting)

N4	For Ø 4 nylon tubing	M-5AN-4
N6	For Ø 6 nylon tubing	M-5AN-6
U4	For Ø 4 soft tubing	M-5AU-4
U6	For Ø 6 soft tubing	M-5AU-6

❻ Connection thread (Male thread)

A8	M8 x 1

Model									A	B	C
	Vacuum inlet direction	❶ Pad dia.	Form	❷ *1 Material	❸ Buffer spec.	❹ Buffer stroke	❺ Vacuum inlet	❻ Connection thread			
ZP	Y	06 08	B	N S U F GN GS	J K JN KN	6	N4 N6 U4 U6	A8	64	38	15
						10			95	41	43
						15			100	46	
						25			110	56	

Dimensions Per Vacuum Inlet

Model									D	E	Fitting part min. hole size
	Vacuum inlet direction	❶ Pad dia.	Form	❷ *1 Material	❸ Buffer spec.	❹ Buffer stroke	❺ Vacuum inlet	❻ Connection thread			
ZP	Y	06 08	B	N S U F GN GS	J K JN KN	6 10 15 25	N4 U4	A8	13.5	5	Ø 1.8
							N6 U6		15.5	7	Ø 2.5

*1 N: NBR, S: Silicone rubber, U: Urethane rubber, F: FKM, GN: Conductive NBR, GS: Conductive silicone rubber
*2 Indicates the minimum hole size of the adapter or vacuum pad

Dimensions/Models

With buffer/barb fitting Ø 10 to Ø 50

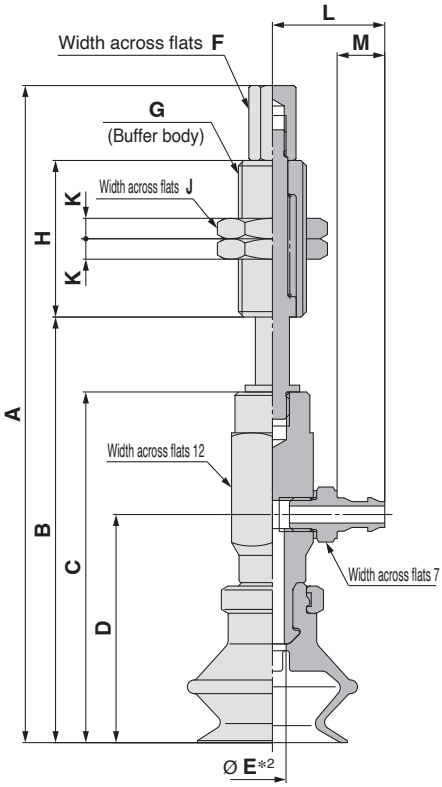

Construction	p. 118
Buffer Assembly	p. 105

ZPY 10 B N J 10 - N4 - A10

❶ ❷ ❹

❸ Buffer specification

J	Rotating
K	Non-rotating

❻ Connection thread (Male thread)

A10	M10 x 1
A14	M14 x 1

❺ Vacuum inlet (Barb fitting)

N4	For Ø 4 nylon tubing	M-5AN-4
N6	For Ø 6 nylon tubing	M-5AN-6
U4	For Ø 4 soft tubing	M-5AU-4
U6	For Ø 6 soft tubing	M-5AU-6

Model									A	B	C	D	E*2	F	G	H	J	K
	Vacuum inlet direction	❶ Pad dia.	Form	❷ Material*1	❸ Buffer spec.	❹ Buffer stroke	❺ Vacuum inlet	❻ Connection thread										
ZP	Y	10	B	N S U F GN GS	J K	10	N4 N6 U4 U6	A10	87	53	42	26	2.5	6	M10 x 1	23	14	3
						20			125	63						51		
						30			135	73								
						40			171	83						77		
						50			181	93								
		13				10			89.5	55.5	44.5	28.5				23		
						20			127.5	65.5						51		
						30			137.5	75.5								
						40			173.5	85.5						77		
						50			183.5	95.5								
		16				10			91	57	46	30				23		
						20			129	67						51		
						30			139	77								
						40			175	87						77		
						50			185	97								
		20				10			96.5	62.5	51.5	33.5	3.5	6	M10 x 1	23	14	3
						20			134.5	72.5						51		
						30			144.5	82.5								
						40			180.5	92.5						77		
						50			190.5	102.5								
		25				10			97	63	52	34				23		
						20			135	73						51		
						30			145	83								
						40			181	93						77		
						50			191	103								
		32				10			102	68	57	39				23		
						20			140	78						51		
						30			150	88								
						40			186	98						77		
						50			196	108								
		40				10	N6 U6	A14	142	74	62	44	6	10	M14 x 1	50	19	4
						20			139	84								
						30			149	94								
						50			194	114						75		
		50				10			146	78	66	48				50		
						20			143	88								
						30			153	98								
						50			198	118						75		

Dimensions Per Vacuum Inlet

Model									L	M	Fitting part min. hole size
	Vacuum inlet direction	❶ Pad dia.	Form	❷ Material*1	❸ Buffer spec.	❹ Buffer stroke	❺ Vacuum inlet	❻ Connection thread			
ZP	Y	10 13 16 20 25 32	B	N S U F GN GS	J K	10 20 30 40 50	N4 U4	A10	14.5	5	Ø 1.8
							N6 U6		16.5	7	Ø 2.5
		40 50					N6 U6	A14	16.5	7	Ø 2.5

*1 N: NBR, S: Silicone rubber, U: Urethane rubber, F: FKM, GN: Conductive NBR, GS: Conductive silicone rubber

*2 Indicates the minimum hole size of the adapter or vacuum pad

Basic Pad
Thin Flat Type
ZP Series

How to Order

		Dimensions/ Models	Construction	Mounting Bracket Assembly
Pad unit	ZP 10 UT N	p. 65	p. 94	p. 100
With adapter	ZP □ T 10 UT N – A5 – □	From p. 65	p. 94	p. 100
With buffer	ZP T 10 UT N J 6 – B3 – A8	From p. 70	p. 95	From p. 103

∗ Pad unit's sales unit: 10 pcs.

❶ ❷ ❸ ❹ ❺ ❻ ❼ ❽

• Thin flat type

❶ Adapter material

—	Brass
S∗1	Stainless steel (Stainless steel 304)

∗1 Only applicable to the pad with adapter (Vacuum inlet direction: Vertical (Option "T"))

❷ Vacuum inlet direction

—	Pad unit
T	Vertical
R	Lateral (With One-touch fitting)
Y	Lateral (With barb fitting)

❸ Pad diameter

10	Ø 10
13	Ø 13
16	Ø 16

❹ Material

N	NBR
S	Silicone rubber ∗1 ∗2
U	Urethane rubber
F	FKM
GN	Conductive NBR
GS	Conductive silicone rubber

∗1 Uses a material compliant with a dissolution test of the FDA (U.S. Food and Drug Administration) regulation 21CFR§177.2600 for "Rubber articles intended for repeated use."

∗2 Uses a material compliant with the standards for "Rubber apparatus (excluding baby drinking apparatus) and containers/packaging" (D3) (Partial revision: Japanese Ministry of Health, Labour, and Welfare Notification No. 595, 2012) in Section 3 "Apparatus and Containers/Packaging" of the Japan Food Sanitation Act, Article 18 "Specifications and Standards for Food and Food Additives, etc." (Japanese Ministry of Health and Welfare Notification No. 370, 1959)

❺ Buffer specification

J	Rotating
K	Non-rotating
JN	Rotating (Without buffer plate)
KN	Non-rotating (Without buffer plate)

❻ Buffer stroke

Stroke [mm]	Pad diameter All sizes
6	●
10	●
15	●
25	●

With adapter

❼ Vacuum inlet

○: ZP□T/Vertical ●: ZPR/Lateral (With One-touch fitting) △: ZPY/Lateral (With barb fitting)

Type	Symbol	Size	Pad diameter All sizes
Male thread	A5	M5 x 0.8	○
	A6	M6 x 1	○
Female thread	B4	M4 x 0.7	○
	B5	M5 x 0.8	○
One-touch fitting	04	Ø 4	●
	06	Ø 6	●
Barb fitting	N4	For Ø 4 nylon tubing	△
	N6	For Ø 6 nylon tubing	△
	U4	For Ø 4 soft tubing	△
	U6	For Ø 6 soft tubing	△

❽ Connection thread

●: ZPR/Lateral (With One-touch fitting) △: ZPY/Lateral (With barb fitting)

Type	Symbol	Size	Pad diameter All sizes
Male thread∗1	A5	M5 x 0.8	●△
	A6	M6 x 1	●△
Female thread	B4	M4 x 0.7	●△
	B5	M5 x 0.8	●△

It is not necessary to select a connection thread for ○:ZP□T/Vertical. Use the vacuum inlet.

∗1 The mounting nut is shipped together with the product (unassembled).

With buffer

❼ Vacuum inlet

○: ZPT/Vertical ●: ZPR/Lateral (With One-touch fitting) △: ZPY/Lateral (With barb fitting)

Type	Symbol	Size	Pad diameter All sizes
Female thread	B3	M3 x 0.5	○
	B5	M5 x 0.8	○
One-touch fitting	04	Ø 4	○●
	06	Ø 6	○●
Barb fitting	N4	For Ø 4 nylon tubing∗1	○△
	N6	For Ø 6 nylon tubing∗1	△
	U4	For Ø 4 soft tubing∗2	○△
	U6	For Ø 6 soft tubing∗2	△

∗1 Nylon tube piping

∗2 Soft nylon/Polyurethane tube piping

❽ Connection thread

○: ZPT/Vertical ●: ZPR/Lateral (With One-touch fitting) △: ZPY/Lateral (With barb fitting)

Type	Symbol	Size	Pad diameter All sizes
Male thread∗1	A8	M8 x 1	○●△

∗1 The mounting nut, buffer plate, and ○: ZPT/Vertical buffer are shipped together with the product (unassembled).

Dimensions/Models

Single unit Ø 10 to Ø 16

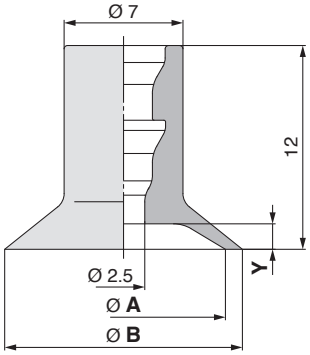

Construction	p. 94
Mounting Bracket Assembly	p. 100

ZP 10 UT N
❶ ❷

Model				A	B	Y
	❶ Pad dia.	Form	❷ *1 Material			
ZP	10	UT	N S U F GN GS	10	11	1
	13			13	14	1.5
	16			16	17	

*1 N: NBR, S: Silicone rubber, U: Urethane rubber, F: FKM, GN: Conductive NBR, GS: Conductive silicone rubber

With adapter Ø 10 to Ø 16

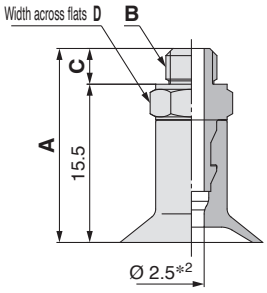

Construction	p. 94
Adapter Assembly	p. 100

ZP □ T 10 UT N - A5
❶ ❷ ❸ ❹

❶ Adapter material

—	Brass
S	Stainless steel (Stainless steel 304)

❹ Vacuum inlet (Male thread)

A5	M5 x 0.8
A6	M6 x 1

Model							A	B	C	D
	❶ Adapter material	Vacuum inlet direction	❷ Pad dia.	Form	❸ *1 Material	❹ Vacuum inlet				
ZP	— S	T	10 13 16	UT	N S U F GN GS	A5	19	M5 x 0.8	3.5	7
						A6	20	M6 x 1	4.5	8

*1 N: NBR, S: Silicone rubber, U: Urethane rubber, F: FKM, GN: Conductive NBR, GS: Conductive silicone rubber
*2 Indicates the minimum hole size of the adapter or vacuum pad

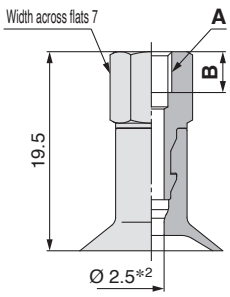

Construction	p. 94
Adapter Assembly	p. 100

ZP □ T 10 UT N - B4
❶ ❷ ❸ ❹

❶ Adapter material

—	Brass
S	Stainless steel (Stainless steel 304)

❹ Vacuum inlet (Female thread)

B4	M4 x 0.7
B5	M5 x 0.8

Model							A	B
	❶ Adapter material	Vacuum inlet direction	❷ Pad dia.	Form	❸ *1 Material	❹ Vacuum inlet		
ZP	— S	T	10 13 16	UT	N S U F GN GS	B4	M4 x 0.7	4
						B5	M5 x 0.8	5

*1 N: NBR, S: Silicone rubber, U: Urethane rubber, F: FKM, GN: Conductive NBR, GS: Conductive silicone rubber
*2 Indicates the minimum hole size of the adapter or vacuum pad

Dimensions/Models

With adapter/One-touch fitting Ø 10 to Ø 16

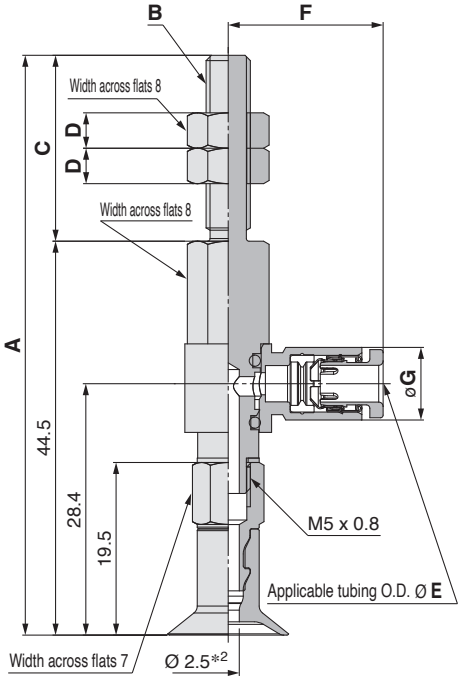

Construction	p. 94
Adapter Assembly	p. 101

ZPR 10 UT N - 04 - A5

❶ ❷ ❸ ❹

❹ Connection thread (Male thread)

A5	M5 x 0.8
A6	M6 x 1

Vacuum inlet ❸ (One-touch fitting)

04	Ø 4
06	Ø 6

Model							A	B	C	D
	Vacuum inlet direction	❶ Pad dia.	Form	❷ Material *1	❸ Vacuum inlet	❹ Connection thread				
ZP	R	10 13 16	UT	N S U F GN GS	04 06	A5	65.5	M5 x 0.8	21	4
						A6	70.5	M6 x 1	26	4

Dimensions Per Vacuum Inlet

Model							E	F	G	Fitting part min. hole size
	Vacuum inlet direction	❶ Pad dia.	Form	❷ Material *1	❸ Vacuum inlet	❹ Connection thread				
ZP	R	10 13 16	UT	N S U F GN GS	04	A5 A6	4	17.5	8.2	Ø 2.5
					06		6	18.3	10.4	Ø 4

*1 N: NBR, S: Silicone rubber, U: Urethane rubber, F: FKM, GN: Conductive NBR, GS: Conductive silicone rubber
*2 Indicates the minimum hole size of the adapter or vacuum pad

Dimensions/Models

With adapter/One-touch fitting Ø 10 to Ø 16

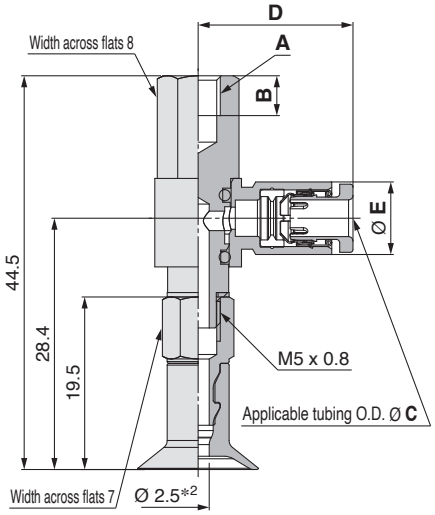

Construction p. 94
Adapter Assembly p. 101

ZPR 10 UT N - 04 - B4

❶ ❷ ❸ ❹

❹ Connection thread (Female thread)

B4	M4 x 0.7
B5	M5 x 0.8

❸ Vacuum inlet (One-touch fitting)

04	Ø 4
06	Ø 6

Model							A	B
	Vacuum inlet direction	❶ Pad dia.	Form	❷ Material *1	❸ Vacuum inlet	❹ Connection thread		
ZP	R	10 13 16	UT	N S U F GN GS	04 06	B4	M4 x 0.7	4.5
						B5	M5 x 0.8	5.5

Dimensions Per Vacuum Inlet

Model							C	D	E	Fitting part min. hole size
	Vacuum inlet direction	❶ Pad dia.	Form	❷ Material *1	❸ Vacuum inlet	❹ Connection thread				
ZP	R	10 13 16	UT	N S U F GN GS	04	B4 B5	4	17.5	8.2	Ø 2.5
					06		6	18.3	10.4	Ø 4

*1 N: NBR, S: Silicone rubber, U: Urethane rubber, F: FKM, GN: Conductive NBR, GS: Conductive silicone rubber
*2 Indicates the minimum hole size of the adapter or vacuum pad

Dimensions/Models

With adapter/barb fitting Ø 10 to Ø 16

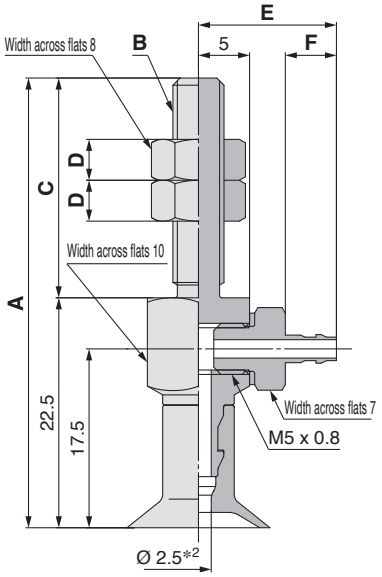

Construction p. 94
Adapter Assembly p. 102

ZPY 10 UT N - N4 - A5
❶ ❷ ❸ ❹

❹ Connection thread (Male thread)

A5	M5 x 0.8
A6	M6 x 1

❸ Vacuum inlet (Barb fitting)

N4	For Ø 4 nylon tubing	M-5AN-4
N6	For Ø 6 nylon tubing	M-5AN-6
U4	For Ø 4 soft tubing	M-5AU-4
U6	For Ø 6 soft tubing	M-5AU-6

Model							A	B	C	D
	Vacuum inlet direction	❶ Pad dia.	Form	❷ *1 Material	❸ Vacuum inlet	❹ Connection thread				
ZP	Y	10 13 16	UT	N S U F GN GS	N4 N6 U4 U6	A5	44	M5 x 0.8	21.5	4
						A6	49.5	M6 x 1	27	4

Dimensions Per Vacuum Inlet

Model							E	F	Fitting part min. hole size
	Vacuum inlet direction	❶ Pad dia.	Form	❷ *1 Material	❸ Vacuum inlet	❹ Connection thread			
ZP	Y	10 13 16	UT	N S U F GN GS	N4 U4	A5 A6	13.5	5	Ø 1.8
					N6 U6		15.5	7	Ø 2.5

*1 N: NBR, S: Silicone rubber, U: Urethane rubber, F: FKM, GN: Conductive NBR, GS: Conductive silicone rubber
*2 Indicates the minimum hole size of the adapter or vacuum pad

Dimensions/Models

With adapter/barb fitting Ø 10 to Ø 16

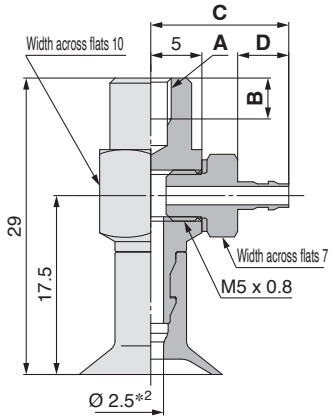

Construction p. 94
Adapter Assembly p. 102

ZPY 10 UT N - N4 - B4

❶ ❷ ❸ ❹

❹ Connection thread (Female thread)

B4	M4 x 0.7
B5	M5 x 0.8

❸ Vacuum inlet (Barb fitting)

N4	For Ø 4 nylon tubing	M-5AN-4
N6	For Ø 6 nylon tubing	M-5AN-6
U4	For Ø 4 soft tubing	M-5AU-4
U6	For Ø 6 soft tubing	M-5AU-6

Model							A	B
	Vacuum inlet direction	❶ Pad dia.	Form	❷ Material *1	❸ Vacuum inlet	❹ Connection thread		
ZP	Y	10 13 16	UT	N S U F GN GS	N4 N6 U4 U6	B4	M4 x 0.7	4
						B5	M5 x 0.8	5

Dimensions Per Vacuum Inlet

Model							C	D	Fitting part min. hole size
	Vacuum inlet direction	❶ Pad dia.	Form	❷ Material *1	❸ Vacuum inlet	❹ Connection thread			
ZP	Y	10 13 16	UT	N S U F GN GS	N4 U4	B4 B5	13.5	5	Ø 1.8
					N6 U6		15.5	7	Ø 2.5

*1 N: NBR, S: Silicone rubber, U: Urethane rubber, F: FKM, GN: Conductive NBR, GS: Conductive silicone rubber
*2 Indicates the minimum hole size of the adapter or vacuum pad

Dimensions/Models

With buffer Ø 10 to Ø 16

The drawings show the type with a buffer plate.

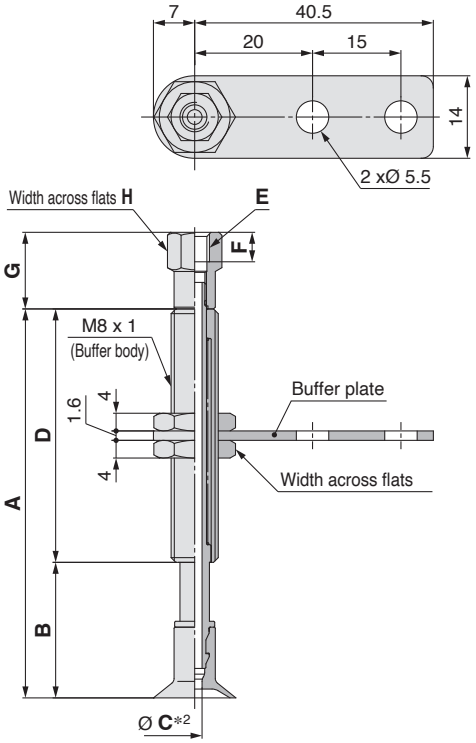

Vacuum inlet: One-touch fitting

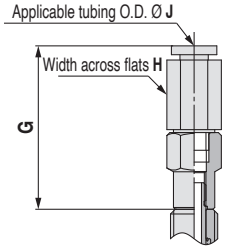

Vacuum inlet: Barb fitting

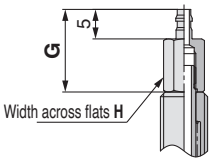

Construction	p. 116
Buffer Assembly	p. 103

ZPT 10 UT N J 6 - B3 - A8
❶ ❷ ❸ ❹ ❺ ❻

❸ Buffer specification

J	Rotating
K	Non-rotating
JN	Rotating (Without buffer plate)
KN	Non-rotating (Without buffer plate)

❻ Connection thread (Male thread)

A8	M8 x 1

❺ Vacuum inlet

B3	M3 x 0.5	Female thread	
B5	M5 x 0.8		
04	Ø 4	One-touch fitting	KQ2H04-M5N
06	Ø 6		KQ2H06-M5N
N4	For Ø 4 nylon tubing	Barb fitting	
U4	For Ø 4 soft tubing		

Model									A	B	C*2	D
Vacuum inlet direction		❶ Pad dia.	Form	❷ *1 Material	❸ Buffer spec.	❹ Buffer stroke	❺ Vacuum inlet	❻ Connection thread				
ZP	T	10 13 16	UT	N S U F GN GS	J K JN KN	6	B3 B5 04 06 N4 U4	A8	33	18	J: 2.5 K: 2	15
						10			66	23		43
						15			71	28		
						25			81	38		

Dimensions Per Vacuum Inlet: Female Thread

Model									E	F	G	H
Vacuum inlet direction		❶ Pad dia.	Form	❷ *1 Material	❸ Buffer spec.	❹ Buffer stroke	❺ Vacuum inlet	❻ Connection thread				
ZP	T	10 13 16	UT	N S U F GN GS	J K JN KN	6 10 15 25	B3	A8	M3 x 0.5	3	11	6
							B5		M5 x 0.8	5	13	8

Dimensions Per Vacuum Inlet: One-touch Fitting

Model									G	H	J	Fitting part min. hole size
Vacuum inlet direction		❶ Pad dia.	Form	❷ *1 Material	❸ Buffer spec.	❹ Buffer stroke	❺ Vacuum inlet	❻ Connection thread				
ZP	T	10 13 16	UT	N S U F GN GS	J K JN KN	6 10 15 25	04	A8	27.7	8	4	Ø 2.5
							06			10	6	

Dimensions Per Vacuum Inlet: Barb Fitting

Model									G	H	Fitting part min. hole size
Vacuum inlet direction		❶ Pad dia.	Form	❷ *1 Material	❸ Buffer spec.	❹ Buffer stroke	❺ Vacuum inlet	❻ Connection thread			
ZP	T	10 13 16	UT	N S U F GN GS	J K JN KN	6 10 15 25	N4	A8	14	6	Ø 1.8
							U4				

*1 N: NBR, S: Silicone rubber, U: Urethane rubber, F: FKM, GN: Conductive NBR, GS: Conductive silicone rubber
*2 Indicates the minimum hole size of the adapter or vacuum pad

Dimensions/Models

With buffer/One-touch fitting Ø 10 to Ø 16

The drawings show the type with a buffer plate.

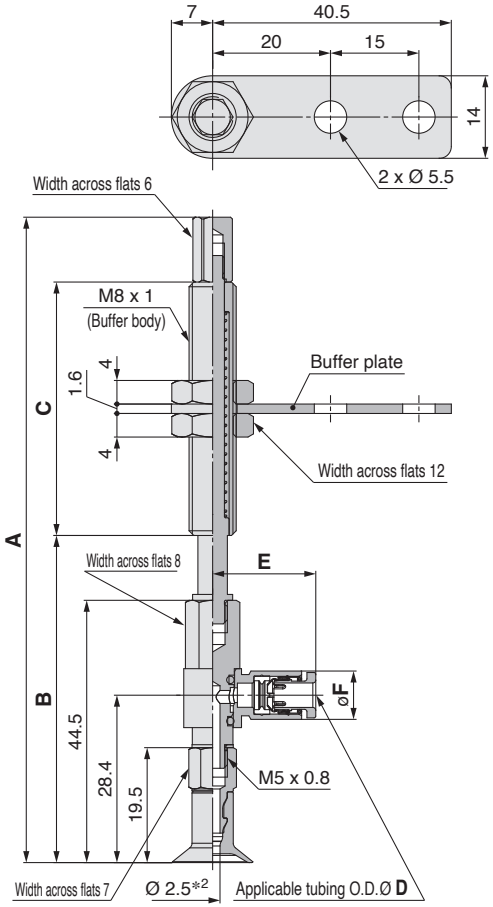

Construction p. 116
Buffer Assembly p. 104

ZPR 10 UT N J 6 - 04 - A8

❶ ❷ ❸ ❹ ❺ ❻

❸ Buffer specification

J	Rotating
K	Non-rotating
JN	Rotating (Without buffer plate)
KN	Non-rotating (Without buffer plate)

❻ Connection thread (Male thread)

A8	M8 x 1

❺ Vacuum inlet (One-touch fitting)

04	Ø 4
06	Ø 6

Model									A	B	C
	Vacuum inlet direction	❶ Pad dia.	Form	❷ *1 Material	❸ Buffer spec.	❹ Buffer stroke	❺ Vacuum inlet	❻ Connection thread			
ZP	R	10 13 16	UT	N S U F GN GS	J K JN KN	6	04 06	A8	78.5	52.5	15
						10			109.5	55.5	43
						15			114.5	60.5	
						25			124.5	70.5	

Dimensions Per Vacuum Inlet

Model									D	E	F	Fitting part min. hole size
	Vacuum inlet direction	❶ Pad dia.	Form	❷ *1 Material	❸ Buffer spec.	❹ Buffer stroke	❺ Vacuum inlet	❻ Connection thread				
ZP	R	10 13 16	UT	N S U F GN GS	J K JN KN	6 10 15 25	04	A8	4	17.5	8.2	Ø 2.5
							06		6	18.3	10.4	Ø 4

*1 N: NBR, S: Silicone rubber, U: Urethane rubber, F: FKM, GN: Conductive NBR, GS: Conductive silicone rubber
*2 Indicates the minimum hole size of the adapter or vacuum pad

Dimensions/Models

With buffer/barb fitting Ø 10 to Ø 16

The drawings show the type with a buffer plate.

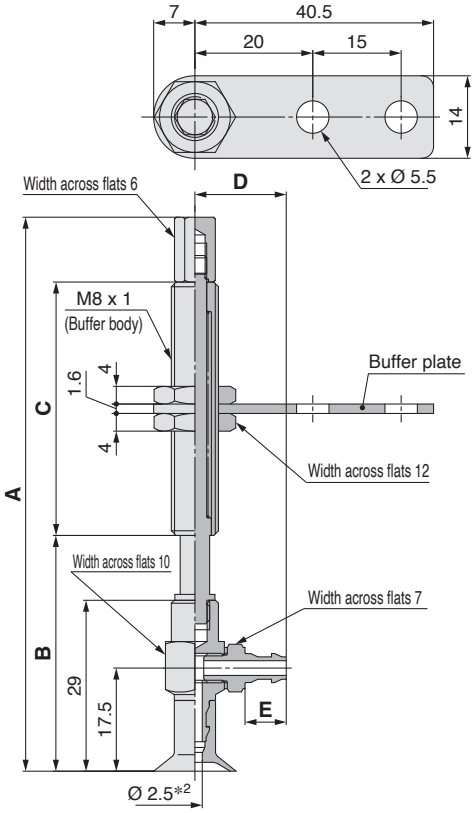

Construction	p. 116
Buffer Assembly	p. 105

ZPY 10 UT N J 6 - N4 - A8

❶ ❷ ❸ ❹ ❺ ❻

❸ Buffer specification

J	Rotating
K	Non-rotating
JN	Rotating (Without buffer plate)
KN	Non-rotating (Without buffer plate)

❻ Connection thread (Male thread)

A8	M8 x 1

❺ Vacuum inlet (Barb fitting)

N4	For Ø 4 nylon tubing	M-5AN-4
N6	For Ø 6 nylon tubing	M-5AN-6
U4	For Ø 4 soft tubing	M-5AU-4
U6	For Ø 6 soft tubing	M-5AU-6

Model									A	B	C
	Vacuum inlet direction	❶ Pad dia.	Form	❷ *1 Material	❸ Buffer spec.	❹ Buffer stroke	❺ Vacuum inlet	❻ Connection thread			
ZP	Y	10 13 16	UT	N S U F GN GS	J K JN KN	6	N4 N6 U4 U6	A8	63	37	15
						10			94	40	43
						15			99	45	
						25			109	55	

Dimensions Per Vacuum Inlet

Model									D	E	Fitting part min. hole size
	Vacuum inlet direction	❶ Pad dia.	Form	❷ *1 Material	❸ Buffer spec.	❹ Buffer stroke	❺ Vacuum inlet	❻ Connection thread			
ZP	Y	10 13 16	UT	N S U F GN GS	J K JN KN	6 10 15 25	N4 U4	A8	13.5	5	Ø 1.8
							N6 U6		15.5	7	Ø 2.5

*1 N: NBR, S: Silicone rubber, U: Urethane rubber, F: FKM, GN: Conductive NBR, GS: Conductive silicone rubber

*2 Indicates the minimum hole size of the adapter or vacuum pad

Basic Pad

Thin Flat Type with Ribs

ZP Series

How to Order

		Dimensions/ Models	Construction	Mounting Bracket Assembly
Pad unit	ZP 10 CT N	p. 74	p. 94	p. 100
With adapter	ZP ❶ T ❷ 10 ❸ CT ❹ N – A5 ❼ – ❽	From p. 74	p. 94	p. 100
With buffer	ZP T 10 CT N ❹ J ❺ 6 ❻ – B3 ❼ – A8 ❽	From p. 79	p. 95	From p. 103

∗ Pad unit's sales unit: 10 pcs.

❶ ❷ ❸ ❹ ❺ ❻ ❼ ❽

●Thin flat type with ribs

❶ Adapter material

—	Brass
S∗1	Stainless steel (Stainless steel 304)

∗1 Only applicable to the pad with adapter (Vacuum inlet direction: Vertical (Option "T"))

❷ Vacuum inlet direction

—	Pad unit
T	Vertical
R	Lateral (With One-touch fitting)
Y	Lateral (With barb fitting)

❸ Pad diameter

10	Ø 10
13	Ø 13
16	Ø 16

❹ Material

N	NBR
S	Silicone rubber∗1 ∗2
U	Urethane rubber
F	FKM
GN	Conductive NBR
GS	Conductive silicone rubber

∗1 Uses a material compliant with a dissolution test of the FDA (U.S. Food and Drug Administration) regulation 21CFR§177.2600 for "Rubber articles intended for repeated use."

∗2 Uses a material compliant with the standards for "Rubber apparatus (excluding baby drinking apparatus) and containers/packaging" (D3) (Partial revision: Japanese Ministry of Health, Labour, and Welfare Notification No. 595, 2012) in Section 3 "Apparatus and Containers/Packaging" of the Japan Food Sanitation Act, Article 18 "Specifications and Standards for Food and Food Additives, etc." (Japanese Ministry of Health and Welfare Notification No. 370, 1959)

❺ Buffer specification

J	Rotating
K	Non-rotating
JN	Rotating (Without buffer plate)
KN	Non-rotating (Without buffer plate)

❻ Buffer stroke

Stroke [mm]	Pad diameter
	All sizes
6	●
10	●
15	●
25	●

With adapter

❼ Vacuum inlet

○: ZP□T/Vertical ●: ZPR/Lateral (With One-touch fitting) △: ZPY/Lateral (With barb fitting)

Type	Symbol	Size	Pad diameter
			All sizes
Male thread	A5	M5 x 0.8	○
	A6	M6 x 1	○
Female thread	B4	M4 x 0.7	○
	B5	M5 x 0.8	○
One-touch fitting	04	Ø 4	●
	06	Ø 6	●
Barb fitting	N4	For Ø 4 nylon tubing	△
	N6	For Ø 6 nylon tubing	△
	U4	For Ø 4 soft tubing	△
	U6	For Ø 6 soft tubing	△

❽ Connection thread

●: ZPR/Lateral (With One-touch fitting) △: ZPY/Lateral (With barb fitting)

Type	Symbol	Size	Pad diameter
			All sizes
Male thread∗1	A5	M5 x 0.8	●△
	A6	M6 x 1	●△
Female thread	B4	M4 x 0.7	●△
	B5	M5 x 0.8	●△

It is not necessary to select a connection thread for ○:ZP□T/Vertical. Use the vacuum inlet.

∗1 The mounting nut is shipped together with the product (unassembled).

With buffer

❼ Vacuum inlet

○: ZPT/Vertical ●: ZPR/Lateral (With One-touch fitting) △: ZPY/Lateral (With barb fitting)

Type	Symbol	Size	Pad diameter
			All sizes
Female thread	B3	M3 x 0.5	○
	B5	M5 x 0.8	○
One-touch fitting	04	Ø 4	○●
	06	Ø 6	○●
Barb fitting	N4	For Ø 4 nylon tubing∗1	○△
	N6	For Ø 6 nylon tubing∗1	△
	U4	For Ø 4 soft tubing∗2	○△
	U6	For Ø 6 soft tubing∗2	△

∗1 Nylon tube piping

∗2 Soft nylon/Polyurethane tube piping

❽ Connection thread

○: ZPT/Vertical ●: ZPR/Lateral (With One-touch fitting) △: ZPY/Lateral (With barb fitting)

Type	Symbol	Size	Pad diameter
			All sizes
Male thread∗1	A8	M8 x 1	○●△

∗1 The mounting nut, buffer plate, and ○: ZPT/Vertical buffer are shipped together with the product (unassembled).

Dimensions/Models

Single unit Ø 10 to Ø 16

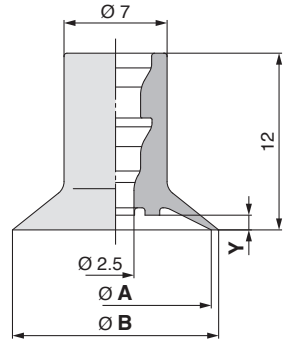

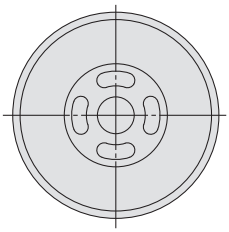

ZP 10 CT N
❶ ❷

Model				A	B	Y
	❶ Pad dia.	Form	❷ *1 Material			
ZP	10	CT	N S U F GN GS	10	11	0.8
	13			13	14	1
	16			16	17	

*1 N: NBR, S: Silicone rubber, U: Urethane rubber, F: FKM, GN: Conductive NBR, GS: Conductive silicone rubber
*2 Indicates the minimum hole size of the adapter or vacuum pad

Construction p. 94
Mounting Bracket Assembly p. 100

With adapter Ø 10 to Ø 16

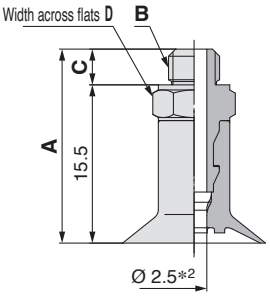

Construction p. 94
Adapter Assembly p. 100

ZP □ T 10 CT N - A5
❶ ❷ ❸ ❹

❶ Adapter material

—	Brass
S	Stainless steel (Stainless steel 304)

❹ Vacuum inlet (Male thread)

A5	M5 x 0.8
A6	M6 x 1

Model							A	B	C	D
	❶ Adapter material	Vacuum inlet direction	❷ Pad dia.	Form	❸ *1 Material	❹ Vacuum inlet				
ZP	— S	T	10 13 16	CT	N S U F GN GS	A5	19	M5 x 0.8	3.5	7
						A6	20	M6 x 1	4.5	8

*1 N: NBR, S: Silicone rubber, U: Urethane rubber, F: FKM, GN: Conductive NBR, GS: Conductive silicone rubber
*2 Indicates the minimum hole size of the adapter or vacuum pad

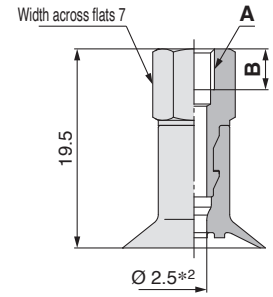

Construction p. 94
Adapter Assembly p. 100

ZP □ T 10 CT N - B4
❶ ❷ ❸ ❹

❶ Adapter material

—	Brass
S	Stainless steel (Stainless steel 304)

❹ Vacuum inlet (Female thread)

B4	M4 x 0.7
B5	M5 x 0.8

Model							A	B
	❶ Adapter material	Vacuum inlet direction	❷ Pad dia.	Form	❸ *1 Material	❹ Vacuum inlet		
ZP	— S	T	10 13 16	CT	N S U F GN GS	B4	M4 x 0.7	4
						B5	M5 x 0.8	5

*1 N: NBR, S: Silicone rubber, U: Urethane rubber, F: FKM, GN: Conductive NBR, GS: Conductive silicone rubber
*2 Indicates the minimum hole size of the adapter or vacuum pad

Dimensions/Models

With adapter/One-touch fitting Ø 10 to Ø 16

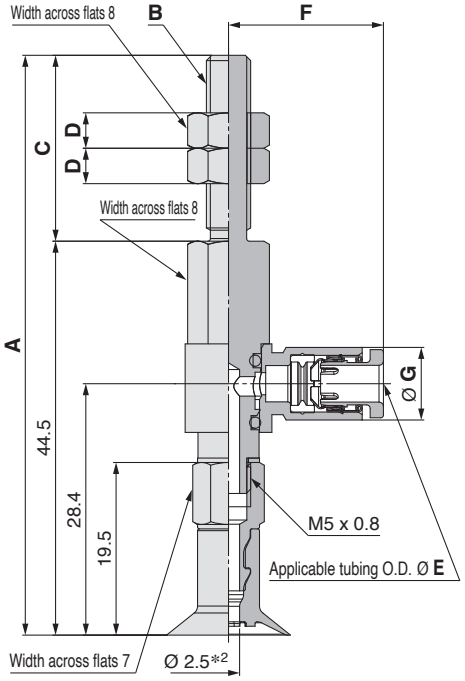

Construction p. 94
Adapter Assembly p. 101

ZPR 10 CT N - 04 - A5

❶ ❷ ❸ ❹

❶ 10 / 13 / 16

❷ N, S, U, F, GN, GS

❸ Vacuum inlet (One-touch fitting)

04	Ø 4
06	Ø 6

❹ Connection thread (Male thread)

A5	M5 x 0.8
A6	M6 x 1

Model							A	B	C	D
	Vacuum inlet direction	❶ Pad dia.	Form	❷ Material *1	❸ Vacuum inlet	❹ Connection thread				
ZP	R	10 13 16	CT	N S U F GN GS	04 06	A5	65.5	M5 x 0.8	21	4
						A6	70.5	M6 x 1	26	4

Dimensions Per Vacuum Inlet

Model							E	F	G	Fitting part min. hole size
	Vacuum inlet direction	❶ Pad dia.	Form	❷ Material *1	❸ Vacuum inlet	❹ Connection thread				
ZP	R	10 13 16	CT	N S U F GN GS	04	A5 A6	4	17.5	8.2	Ø 2.5
					06		6	18.3	10.4	Ø 4

*1 N: NBR, S: Silicone rubber, U: Urethane rubber, F: FKM, GN: Conductive NBR, GS: Conductive silicone rubber
*2 Indicates the minimum hole size of the adapter or vacuum pad

Dimensions/Models

With adapter/One-touch fitting Ø 10 to Ø 16

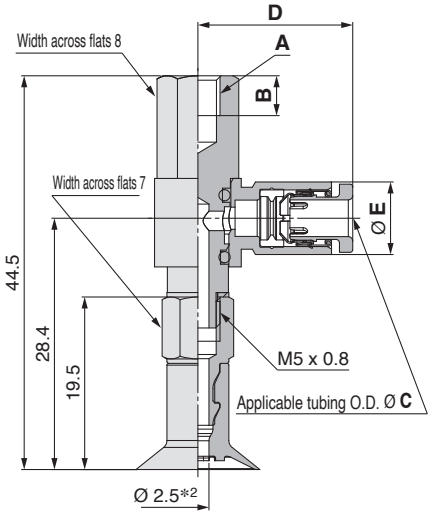

Construction p. 94
Adapter Assembly p. 101

ZPR 10 CT N - 04 - B4

❶ ❷ ❸ ❹

❸ **Vacuum inlet (One-touch fitting)**

04	Ø 4
06	Ø 6

❹ **Connection thread (Female thread)**

B4	M4 x 0.7
B5	M5 x 0.8

Model							A	B
	Vacuum inlet direction	❶ Pad dia.	Form	❷ Material *1	❸ Vacuum inlet	❹ Connection thread		
ZP	R	10 13 16	CT	N S U F GN GS	04 06	B4	M4 x 0.7	4.5
						B5	M5 x 0.8	5.5

Dimensions Per Vacuum Inlet

Model							C	D	E	Fitting part min. hole size
	Vacuum inlet direction	❶ Pad dia.	Form	❷ Material *1	❸ Vacuum inlet	❹ Connection thread				
ZP	R	10 13 16	CT	N S U F GN GS	04	B4 B5	4	17.5	8.2	Ø 2.5
					06		6	18.3	10.4	Ø 4

*1 N: NBR, S: Silicone rubber, U: Urethane rubber, F: FKM, GN: Conductive NBR, GS: Conductive silicone rubber
*2 Indicates the minimum hole size of the adapter or vacuum pad

Dimensions/Models

With adapter/barb fitting Ø 10 to Ø 16

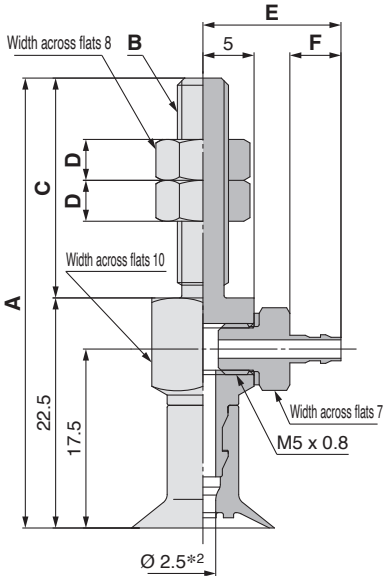

Construction p. 94
Adapter Assembly p. 102

ZPY 10 CT N - N4 - A5

❶ ❷ ❸ ❹

❹ Connection thread (Male thread)

A5	M5 x 0.8
A6	M6 x 1

❸ Vacuum inlet (Barb fitting)

N4	For Ø 4 nylon tubing	M-5AN-4
N6	For Ø 6 nylon tubing	M-5AN-6
U4	For Ø 4 soft tubing	M-5AU-4
U6	For Ø 6 soft tubing	M-5AU-6

Model							A	B	C	D
	Vacuum inlet direction	❶ Pad dia.	Form	❷ *1 Material	❸ Vacuum inlet	❹ Connection thread				
ZP	Y	10 13 16	CT	N S U F GN GS	N4 N6 U4 U6	A5	44	M5 x 0.8	21.5	4
						A6	49.5	M6 x 1	27	4

Dimensions Per Vacuum Inlet

Model							E	F	Fitting part min. hole size
	Vacuum inlet direction	❶ Pad dia.	Form	❷ *1 Material	❸ Vacuum inlet	❹ Connection thread			
ZP	Y	10 13 16	CT	N S U F GN GS	N4 U4	A5 A6	13.5	5	Ø 1.8
					N6 U6		15.5	7	Ø 2.5

*1 N: NBR, S: Silicone rubber, U: Urethane rubber, F: FKM, GN: Conductive NBR, GS: Conductive silicone rubber
*2 Indicates the minimum hole size of the adapter or vacuum pad

Dimensions/Models

With adapter/barb fitting Ø 10 to Ø 16

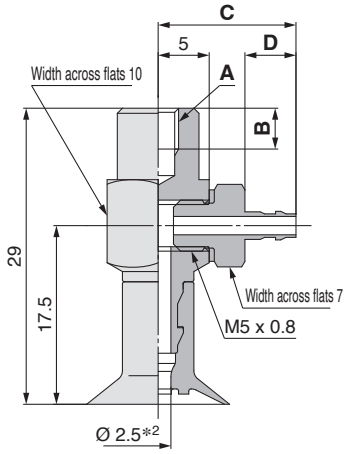

Construction p. 94
Adapter Assembly p. 102

ZPY 10 CT N - N4 - B4
❶ ❷ ❸ ❹

❹ Connection thread (Female thread)

B4	M4 x 0.7
B5	M5 x 0.8

Vacuum inlet ❸ (Barb fitting)

N4	For Ø 4 nylon tubing	M-5AN-4
N6	For Ø 6 nylon tubing	M-5AN-6
U4	For Ø 4 soft tubing	M-5AU-4
U6	For Ø 6 soft tubing	M-5AU-6

Model							A	B
	Vacuum inlet direction	❶ Pad dia.	Form	❷ Material *1	❸ Vacuum inlet	❹ Connection thread		
ZP	Y	10 13 16	CT	N S U F GN GS	N4 N6 U4 U6	B4	M4 x 0.7	4
						B5	M5 x 0.8	5

Dimensions Per Vacuum Inlet

Model							C	D	Fitting part min. hole size
	Vacuum inlet direction	❶ Pad dia.	Form	❷ Material *1	❸ Vacuum inlet	❹ Connection thread			
ZP	Y	10 13 16	CT	N S U F GN GS	N4 U4	B4 B5	13.5	5	Ø 1.8
					N6 U6		15.5	7	Ø 2.5

*1 N: NBR, S: Silicone rubber, U: Urethane rubber, F: FKM, GN: Conductive NBR, GS: Conductive silicone rubber
*2 Indicates the minimum hole size of the adapter or vacuum pad

Dimensions/Models

With buffer Ø 10 to Ø 16

The drawings show the type with a buffer plate.

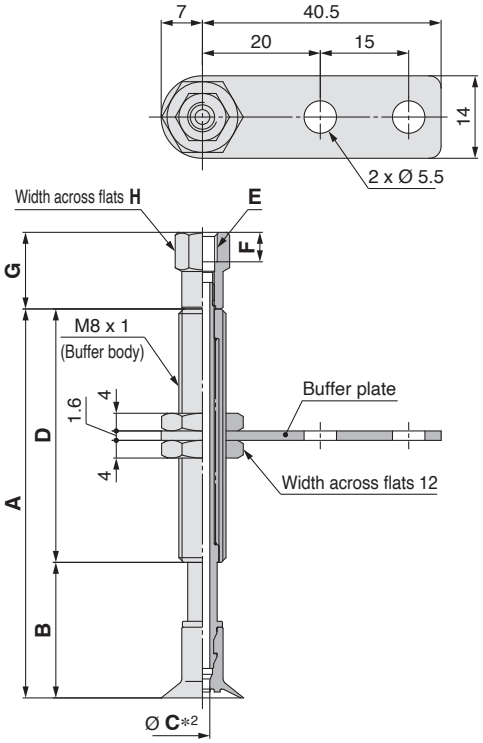

Vacuum inlet: One-touch fitting

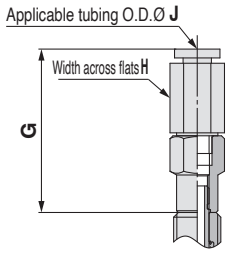

Vacuum inlet: Barb fitting

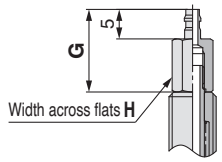

Construction	p. 116
Buffer Assembly	p. 103

ZPT 10 CT N J 6 - B3 - A8
❶ ❷ ❸ ❹ ❺ ❻

❸ Buffer specification

J	Rotating
K	Non-rotating
JN	Rotating (Without buffer plate)
KN	Non-rotating (Without buffer plate)

❻ Connection thread (Male thread)

A8	M8 x 1

❺ Vacuum inlet

B3	M3 x 0.5	Female thread	
B5	M5 x 0.8		
04	Ø 4	One-touch fitting	KQ2H04-M5N
06	Ø 6		KQ2H06-M5N
N4	For Ø 4 nylon tubing	Barb fitting	
U4	For Ø 4 soft tubing		

Model									A	B	C*2	D
	Vacuum inlet direction	❶ Pad dia.	Form	❷ *1 Material	❸ Buffer spec.	❹ Buffer stroke	❺ Vacuum inlet	❻ Connection thread				
ZP	T	10 13 16	CT	N S U F GN GS	J K JN KN	6	B3 B5 04 06 N4 U4	A8	33	18	J: 2.5 K: 2	15
						10			66	23		43
						15			71	28		
						25			81	38		

Dimensions Per Vacuum Inlet: Female Thread

Model									E	F	G	H
	Vacuum inlet direction	❶ Pad dia.	Form	❷ *1 Material	❸ Buffer spec.	❹ Buffer stroke	❺ Vacuum inlet	❻ Connection thread				
ZP	T	10 13 16	CT	N S U F GN GS	J K JN KN	6 10 15 25	B3	A8	M3 x 0.5	3	11	6
							B5		M5 x 0.8	5	13	8

Dimensions Per Vacuum Inlet: One-touch Fitting

Model									G	H	J	Fitting part min. hole size
	Vacuum inlet direction	❶ Pad dia.	Form	❷ *1 Material	❸ Buffer spec.	❹ Buffer stroke	❺ Vacuum inlet	❻ Connection thread				
ZP	T	10 13 16	CT	N S U F GN GS	J K JN KN	6 10 15 25	04	A8	27.7	8	4	Ø 2.5
							06			10	6	

Dimensions Per Vacuum Inlet: Barb Fitting

Model									G	H	Fitting part min. hole size
	Vacuum inlet direction	❶ Pad dia.	Form	❷ *1 Material	❸ Buffer spec.	❹ Buffer stroke	❺ Vacuum inlet	❻ Connection thread			
ZP	T	10 13 16	CT	N S U F GN GS	J K JN KN	6 10 15 25	N4	A8	14	6	Ø 1.8
							U4				

*1 N: NBR, S: Silicone rubber, U: Urethane rubber, F: FKM, GN: Conductive NBR, GS: Conductive silicone rubber
*2 Indicates the minimum hole size of the adapter or vacuum pad

Dimensions/Models

With buffer/One-touch fitting Ø 10 to Ø 16

The drawings show the type with a buffer plate.

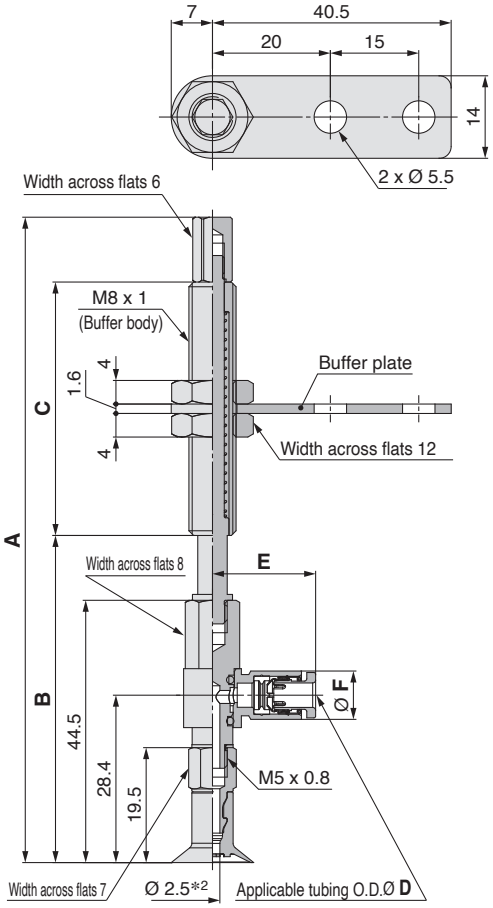

Construction p. 116
Buffer Assembly p. 104

ZPR 10 CT N J 6 - 04 - A8
❶ ❷ ❸ ❹ ❺ ❻

❸ Buffer specification

J	Rotating
K	Non-rotating
JN	Rotating (Without buffer plate)
KN	Non-rotating (Without buffer plate)

❻ Connection thread (Male thread)

A8	M8 x 1

❺ Vacuum inlet (One-touch fitting)

04	Ø 4
06	Ø 6

Model									A	B	C
	Vacuum inlet direction	❶ Pad dia.	Form	❷ *1 Material	❸ Buffer spec.	❹ Buffer stroke	❺ Vacuum inlet	❻ Connection thread			
ZP	R	10 13 16	CT	N S U F GN GS	J K JN KN	6	04 06	A8	78.5	52.5	15
						10			109.5	55.5	43
						15			114.5	60.5	
						25			124.5	70.5	

Dimensions Per Vacuum Inlet

Model									D	E	F	Fitting part min. hole size
	Vacuum inlet direction	❶ Pad dia.	Form	❷ *1 Material	❸ Buffer spec.	❹ Buffer stroke	❺ Vacuum inlet	❻ Connection thread				
ZP	R	10 13 16	CT	N S U F GN GS	J K JN KN	6 10 15 25	04	A8	4	17.5	8.2	Ø 2.5
							06		6	18.3	10.4	Ø 4

*1 N: NBR, S: Silicone rubber, U: Urethane rubber, F: FKM, GN: Conductive NBR, GS: Conductive silicone rubber
*2 Indicates the minimum hole size of the adapter or vacuum pad

Dimensions/Models

With buffer/barb fitting Ø 10 to Ø 16

The drawings show the type with a buffer plate.

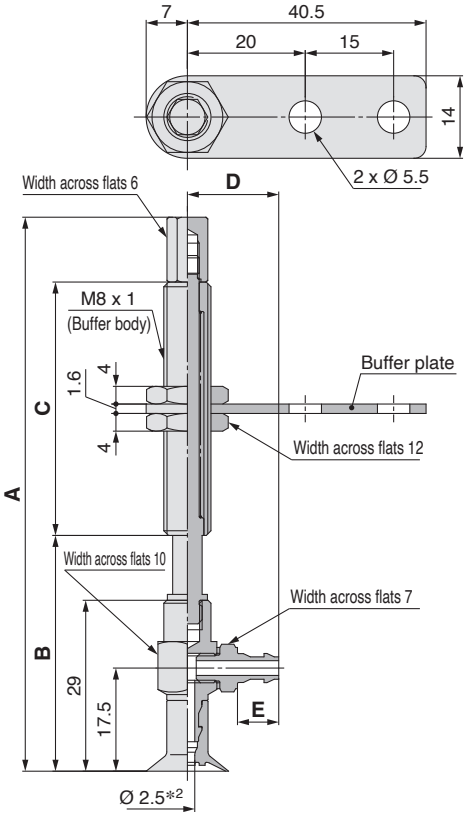

Construction p. 116
Buffer Assembly p. 105

ZPY 10 CT N J 6 - N4 - A8
❶ ❷ ❸ ❹ ❺ ❻

❸ Buffer specification

J	Rotating
K	Non-rotating
JN	Rotating (Without buffer plate)
KN	Non-rotating (Without buffer plate)

❻ Connection thread (Male thread)

A8	M8 x 1

❺ Vacuum inlet (Barb fitting)

N4	For Ø 4 nylon tubing	M-5AN-4
N6	For Ø 6 nylon tubing	M-5AN-6
U4	For Ø 4 soft tubing	M-5AU-4
U6	For Ø 6 soft tubing	M-5AU-6

Model									A	B	C
	Vacuum inlet direction	❶ Pad dia.	Form	❷ *1 Material	❸ Buffer spec.	❹ Buffer stroke	❺ Vacuum inlet	❻ Connection thread			
ZP	Y	10 13 16	CT	N S U F GN GS	J K JN KN	6	N4 N6 U4 U6	A8	63	37	15
						10			94	40	43
						15			99	45	
						25			109	55	

Dimensions Per Vacuum Inlet

Model									D	E	Fitting part min. hole size
	Vacuum inlet direction	❶ Pad dia.	Form	❷ *1 Material	❸ Buffer spec.	❹ Buffer stroke	❺ Vacuum inlet	❻ Connection thread			
ZP	Y	10 13 16	CT	N S U F GN GS	J K JN KN	6 10 15 25	N4 U4	A8	13.5	5	Ø 1.8
							N6 U6		15.5	7	Ø 2.5

*1 N: NBR, S: Silicone rubber, U: Urethane rubber, F: FKM, GN: Conductive NBR, GS: Conductive silicone rubber
*2 Indicates the minimum hole size of the adapter or vacuum pad

Basic Pad

Deep Type

ZP Series

How to Order

		Dimensions/ Models	Construction	Mounting Bracket Assembly
Pad unit	ZP□ 10 D N – □	p. 83	p. 96	p. 100
With adapter	ZP□ T 10 D N – A5 – □	From p. 83	p. 96	p. 100
With buffer	ZP T 10 D N J 10 – B5 – A10	From p. 90	p. 97	From p. 103

❶ ❷ ❸ ❹ ❺ ❻ ❼ ❽ ❾

● Deep type

❶ Adapter (Lock ring) material

—	Brass
S*1	Stainless steel (Stainless steel 304)

*1 Only applicable to the pad unit (with lock ring) and the pad with adapter (Vacuum inlet direction: Vertical (Option "T"))

❷ Vacuum inlet direction

—	Pad unit
T	Vertical
R	Lateral (With One-touch fitting)
Y	Lateral (With barb fitting)

❸ Pad diameter

10	Ø 10
16	Ø 16
25	Ø 25
40	Ø 40

❹ Material

N	NBR
S	Silicone rubber*1 *2
U	Urethane rubber
F	FKM
GN	Conductive NBR
GS	Conductive silicone rubber

*1 Uses a material compliant with a dissolution test of the FDA (U.S. Food and Drug Administration) regulation 21CFR§177.2600 for "Rubber articles intended for repeated use."

*2 Uses a material compliant with the standards for "Rubber apparatus (excluding baby drinking apparatus) and containers/packaging" (D3) (Partial revision: Japanese Ministry of Health, Labour, and Welfare Notification No. 595, 2012) in Section 3 "Apparatus and Containers/ Packaging" of the Japan Food Sanitation Act, Article 18 "Specifications and Standards for Food and Food Additives, etc." (Japanese Ministry of Health and Welfare Notification No. 370, 1959)

❺ Buffer specification

J	Rotating
K	Non-rotating

❻ Buffer stroke

Stroke [mm]	Pad diameter [mm]			
	Ø 10	Ø 16	Ø 25	Ø 40
10	●	●	●	●
20	●	●	●	●
30	●	●	●	●
40	●	●	●	—
50	●	●	●	●

With adapter

❼ Vacuum inlet

○: ZP□T/Vertical ●: ZPR/Lateral (With One-touch fitting) △: ZPY/Lateral (With barb fitting)

Type	Symbol	Size	Pad diameter [mm]		
			Ø 10, Ø 16	Ø 25	Ø 40
Male thread	AS5	M5 x 0.8	○*4	○*4	—
	AS6	M6 x 1	○*4	○*4	○*4
	AG01	G1/8	○*4	○*4	—
	AG02	G1/4	—	—	○*4
Female thread	—	M3 x 0.5	○ (❽Connection thread: A5/A6)	○ (❽Connection thread: A6)	○ (❽Connection thread: A6)
		M5 x 0.8	—	○ (❽Connection thread: A8)	○ (❽Connection thread: A8)
	B5	M5 x 0.8	○*4	○*4	—
	B6	M6 x 1	○*4	○*4	○*4
	B8	M8 x 1.25	—	○*4	○*4
	BG01	G1/8	○*4	○*4	—
	BG02	G1/4	—	—	○*4
	B01	Rc1/8	○*4	○*4	○*4
	N01*3	NPT1/8	○*4	○*4	○*4
	T01*3	NPTF1/8	○*4	○*4	○*4
One-touch fitting	04	Ø 4	●	●	—
	06	Ø 6	●	●	●
	08	Ø 8	—	●	●
Barb fitting	N4	For Ø 4 nylon tubing*1	△	△	—
	N6	For Ø 6 nylon tubing*1	△	△	△
	U4	For Ø 4 soft tubing*2	△	△	—
	U6	For Ø 6 soft tubing*2	△	△	△

*1 Nylon tube piping *2 Soft nylon/Polyurethane tube piping
*3 Not compatible with stainless steel materials *4 Use the connection thread.

❽ Connection thread ○: ZP□T/Vertical ●: ZPR/Lateral (With One-touch fitting) △: ZPY/Lateral (With barb fitting)

Type	Symbol	Size	Pad diameter [mm]		
			Ø 10, Ø 16	Ø 25	Ø 40
Male thread*1	A5	M5 x 0.8	○*2●△	—	—
	A6	M6 x 1	○*2●△	○*2●△	○*2●△
	A8	M8 x 1	—	○*2●△	○*2●△
Female thread	B5	M5 x 0.8	●△	●△	—
	B6	M6 x 1	●△	●△	●△
	B8	M8 x 1.25	—	●△	●△

*1 The mounting nut is shipped together with the product (unassembled).
*2 ○: ZP□T/Vertical comes with a vacuum inlet (female thread).

With buffer

❼ Vacuum inlet

○: ZPT/Vertical ●: ZPR/Lateral (With One-touch fitting) △: ZPY/Lateral (With barb fitting)

Type	Symbol	Size	Pad diameter [mm]		
			Ø 10, Ø 16	Ø 25	Ø 40
Female thread	B5	M5 x 0.8	○	○	○
	B01	Rc1/8	—	—	○
	N01	NPT1/8	—	—	○
	T01	NPTF1/8	—	—	○
One-touch fitting	04	Ø 4	○●	○●	—
	06	Ø 6	○●	○●	○●
	08	Ø 8	—	●	○●
Barb fitting	N4	For Ø 4 nylon tubing*1	△	△	—
	N6	For Ø 6 nylon tubing*1	○△	○△	○△
	U4	For Ø 4 soft tubing*2	△	△	—
	U6	For Ø 6 soft tubing*2	○△	○△	○△

*1 Nylon tube piping
*2 Soft nylon/Polyurethane tube piping

❽ Connection thread

○: ZPT/Vertical ●: ZPR/Lateral (With One-touch fitting) △: ZPY/Lateral (With barb fitting)

Type	Symbol	Size	Pad diameter [mm]		
			Ø 10, Ø 16	Ø 25	Ø 40
Male thread*1	A10	M10 x 1	○●△	○●△	—
	A14	M14 x 1	—	—	○●△

*1 The mounting nut and ○: ZPT/Vertical buffer are shipped together with the product (unassembled).

❾ Lock ring

Symbol	Pad diameter
	All sizes
—	With lock ring
X19	Without lock ring

Lock ring unit

Part no.	Pad diameter [mm]
ZP□L1	Ø 10, Ø 16
ZP□L2	Ø 25
ZP□L3	Ø 40

□: —/Brass S/Stainless steel

* The pad unit lock ring is shipped together with the product (unassembled).

Dimensions/Models

Single unit Ø 10 to Ø 40

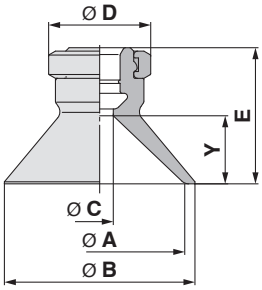

Construction p. 96
Mounting Bracket Assembly p. 100

ZP □ 10 D N
❶ ❷ ❸

❶ Lock ring material

—	Brass
S	Stainless steel (Stainless steel 304)

Model					A	B	C	D	E	Y
	❶ Lock ring material	❷ Pad dia.	Form	❸ Material *1						
ZP	— / S	10	D	N S U F GN GS	10	12	4	13	15	6
		16			16	18			16	7
		25			25	28		15	20	10
		40			40	43	7	18	29	17

*1 N: NBR, S: Silicone rubber, U: Urethane rubber, F: FKM, GN: Conductive NBR, GS: Conductive silicone rubber

With adapter Ø 10 to Ø 40

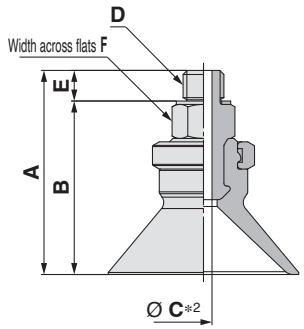

Construction p. 96
Adapter Assembly p. 100

ZP □ T 10 D N - AS5
❶ ❷ ❸ ❹

❶ Adapter (Lock ring) material

—	Brass
S	Stainless steel (Stainless steel 304)

❹ Vacuum inlet (Male thread)

AS5	M5 x 0.8
AS6	M6 x 1
AG01	G1/8
AG02	G1/4

Model							A	B	C*2	D	E	F
	❶ Adapter material	Vacuum inlet direction	❷ Pad dia.	Form	❸ Material *1	❹ Vacuum inlet						
ZP	— / S	T	10	D	N S U F GN GS	AS5	24	20.5	2.5	M5 x 0.8	3.5	8
			16				25	21.5				
			25				29	25.5				
			10			AS6	25	20.5	2.5	M6 x 1	4.5	8
			16				26	21.5				
			25				30	25.5				
			40				40	35.5				12
			10			AG01	33	27.5	2.5	G1/8	5.5	17
			16				34	28.5				
			25				38	32.5	4			
			40			AG02	49.5	43	7	G1/4	6.5	21

*1 N: NBR, S: Silicone rubber, U: Urethane rubber, F: FKM, GN: Conductive NBR, GS: Conductive silicone rubber
*2 Indicates the minimum hole size of the adapter or vacuum pad

Dimensions/Models

With adapter Ø 10 to Ø 40

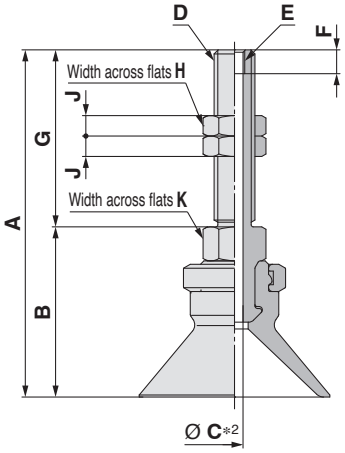

Construction	p. 96
Adapter Assembly	p. 100

ZP □ T 10 D N – A5
❶ ❷ ❸ ❹

❶ Adapter (Lock ring) material

—	Brass
S	Stainless steel (Stainless steel 304)

❹ Connection thread (Male thread)

A5	M5 x 0.8 (M3 x 0.5 With female thread)
A6	M6 x 1 (M3 x 0.5 With female thread)
A8	M8 x 1 (M5 x 0.8 With female thread)

Model																	
	❶ Adapter material	Vacuum inlet direction	❷ Pad dia.	Form	❸ Material *1	❹ Connection thread	A	B	C*2	D	E	F	G	H	J	K
ZP	— S	T	10	D	N S U F GN GS	A5	41	20	2.5	M5 x 0.8	M3 x 0.5	3.5	21	8	4	8
			16				42	21								
			10			A6	46	20	2.5	M6 x 1	M3 x 0.5	3.5	26	8	4	8
			16				47	21								
			25				51	25								
			40				61	35.5								12
			25			A8	46	30	4	M8 x 1	M5 x 0.8	5	16	12	4	12
			40				51	35.5	4.2							

*1 N: NBR, S: Silicone rubber, U: Urethane rubber, F: FKM, GN: Conductive NBR, GS: Conductive silicone rubber
*2 Indicates the minimum hole size of the adapter or vacuum pad

Dimensions/Models

With adapter Ø 10 to Ø 40

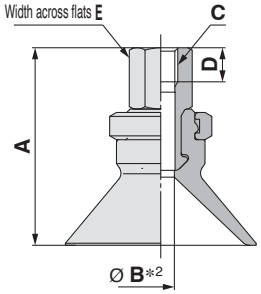

Construction p. 96
Adapter Assembly p. 100

ZP □ T 10 D N – B5
❶ ❷ ❸ ❹

❶ Adapter (Lock ring) material

—	Brass
S	Stainless steel (Stainless steel 304)

❹ Vacuum inlet (Female thread)

B5	M5 x 0.8
B6	M6 x 1
B8	M8 x 1.25
BG01	G1/8
BG02	G1/4
B01	Rc1/8
N01*1	NPT1/8
T01*1	NPTF1/8

*1 Not compatible with stainless steel materials

Model							A	B*2	C	D	E
	❶ Adapter material	Vacuum inlet direction	❷ Pad dia.	Form	❸ Material*1	❹ Vacuum inlet					
ZP	— S	T	10	D	N S U F GN GS	B5	24	2.5	M5 x 0.8	5	8
			16				25				
			25				29	4			
			10			B6	24	2.5	M6 x 1	6	8
			16				25				
			25				29	4			
			40				42.5	4.9			12
			25			B8	35	3.5	M8 x 1.25	8	12
			40				42.5	6.6			
			10			BG01	30	2.5	G1/8	7.4	14
			16				31				
			25				35	4			
			40			BG02	48.5	7	G1/4	11	17
			10			B01 N01*3 T01*3	30	2.5	Rc1/8 NPT1/8 NPTF1/8	—	12
			16				31				
			25				35	3.5			
			40				42.5	7			

*1 N: NBR, S: Silicone rubber, U: Urethane rubber, F: FKM, GN: Conductive NBR, GS: Conductive silicone rubber
*2 Indicates the minimum hole size of the adapter or vacuum pad
*3 Not compatible with stainless steel materials

Dimensions/Models

With adapter/One-touch fitting Ø 10 to Ø 40

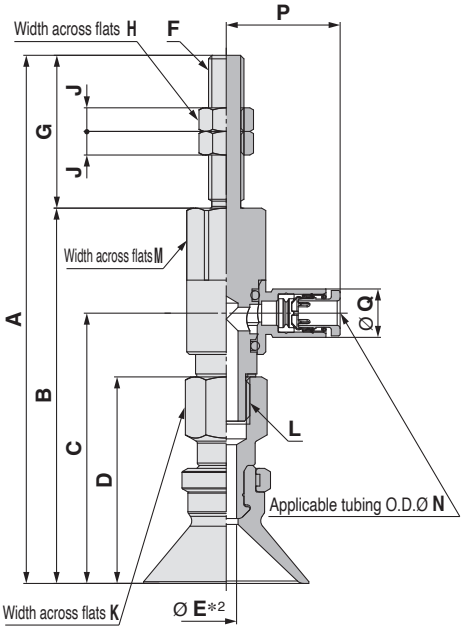

Construction p. 96
Adapter Assembly p. 101

ZPR 10 D N - 04 - A5

❶ ❷ ❸ ❹

❸ Vacuum inlet (One-touch fitting)

04	Ø 4
06	Ø 6
08	Ø 8

❹ Connection thread (Male thread)

A5	M5 x 0.8
A6	M6 x 1
A8	M8 x 1

Model							A	B	C	D	*2 E	F	G	H	J	K	L
	Vacuum inlet direction	❶ Pad dia.	Form	❷ Material *1	❸ Vacuum inlet	❹ Connection thread											
ZP	R	10	D	N S U F GN GS	04 06 08	A5	70	49	32.9	24	2.5	M5 x 0.8	21	8	4	8	M5 x 0.8
		16					71	50	33.9	25							
		10				A6	75	49	32.9	24	2.5	M6 x 1	26	8	4	8	M5 x 0.8
		16					76	50	33.9	25							
		25					89.5	63.6	45.8	35	3.5					12	M8 x 1.25
		40					97	71.1	53.3	42.5	4						
		25				A8	79.5	63.6	45.8	35	3.5	M8 x 1	16	12	4	12	M8 x 1.25
		40					87	71.1	53.3	42.5	4						

Dimensions Per Vacuum Inlet

Model							M	N	P	Q	Fitting part min. hole size
	Vacuum inlet direction	❶ Pad dia.	Form	❷ Material *1	❸ Vacuum inlet	❹ Connection thread					
ZP	R	10	D	N S U F GN GS	04	A5	8	4	17.5	8.2	Ø 2.5
		16			06	A6		6	18.3	10.4	Ø 4
		25			04	A6 A8	12	4	19.3	8.2	Ø 3
					06			6	20.5	10.4	Ø 4.5
					08		16	8	23.5	13.2	Ø 6
		40			06		12	6	20.5	10.4	Ø 4.5
					08		16	8	23.5	13.2	Ø 6

*1 N: NBR, S: Silicone rubber, U: Urethane rubber, F: FKM, GN: Conductive NBR, GS: Conductive silicone rubber

*2 Indicates the minimum hole size of the adapter or vacuum pad

Dimensions/Models

With adapter/One-touch fitting Ø 10 to Ø 40

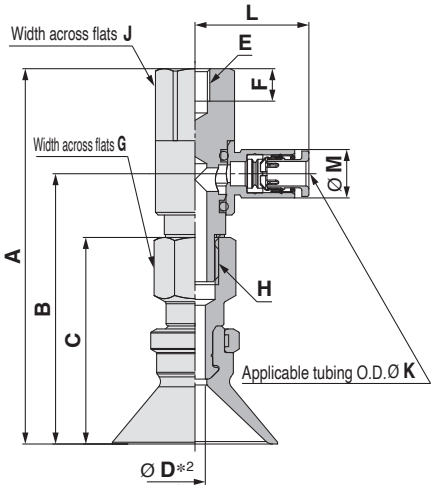

Construction p. 96
Adapter Assembly p. 101

ZPR 10 D N - 04 - B5
❶ ❷ ❸ ❹

❸ Vacuum inlet (One-touch fitting)

04	Ø 4
06	Ø 6
08	Ø 8

❹ Connection thread (Female thread)

B5	M5 x 0.8
B6	M6 x 1
B8	M8 x 1.25

Model							A	B	C	*2 D	E	F	G	H
	Vacuum inlet direction	❶ Pad dia.	Form	❷ *1 Material	❸ Vacuum inlet	❹ Connection thread								
ZP	R	10	D	N S U F GN GS	04 06 08	B5	49	32.9	24	2.5	M5 x 0.8	5.5	8	M5 x 0.8
		16					50	33.9	25					
		25					63.6	45.8	35	3.5			12	M8 x 1.25
		10				B6	49	32.9	24	2.5	M6 x 1	6.5	8	M5 x 0.8
		16					50	33.9	25					
		25					63.6	45.8	35	3.5			12	M8 x 1.25
		40					71.1	53.3	42.5	4				
		25				B8	63.6	45.8	35	3.5	M8 x 1.25	8.5	12	M8 x 1.25
		40					71.1	53.3	42.5	4				

Dimensions Per Vacuum Inlet

Model							J	K	L	M	Fitting part min. hole size
	Vacuum inlet direction	❶ Pad dia.	Form	❷ *1 Material	❸ Vacuum inlet	❹ Connection thread					
ZP	R	10	D	N S U F GN GS	04	B5	8	4	17.5	8.2	Ø 2.5
		16			06	B6		6	18.3	10.4	Ø 4
		25			04	B5	12	4	19.3	8.2	Ø 3
					06	B6		6	20.5	10.4	Ø 4.5
					08	B8	16	8	23.5	13.2	Ø 6
		40			06	B6	12	6	20.5	10.4	Ø 4.5
					08	B8	16	8	23.5	13.2	Ø 6

*1 N: NBR, S: Silicone rubber, U: Urethane rubber, F: FKM, GN: Conductive NBR, GS: Conductive silicone rubber
*2 Indicates the minimum hole size of the adapter or vacuum pad

Dimensions/Models

With adapter/barb fitting Ø 10 to Ø 40

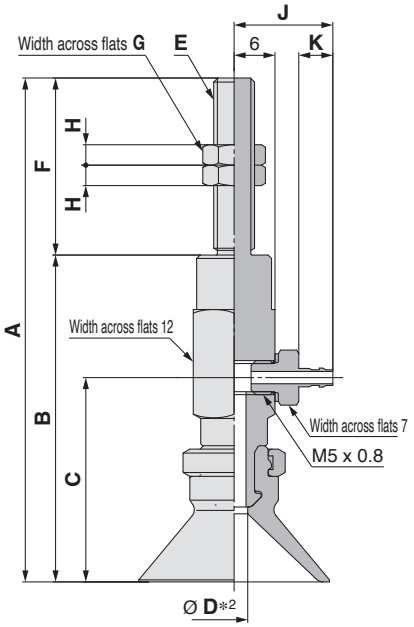

Construction p. 96
Adapter Assembly p. 102

ZPY 10 D N - N4 - A5

❶ ❷ ❸ ❹

❸ Vacuum inlet (Barb fitting)

N4	For Ø 4 nylon tubing	M-5AN-4
N6	For Ø 6 nylon tubing	M-5AN-6
U4	For Ø 4 soft tubing	M-5AU-4
U6	For Ø 6 soft tubing	M-5AU-6

❹ Connection thread (Male thread)

A5	M5 x 0.8
A6	M6 x 1
A8	M8 x 1

Model							A	B	C	D*2	E	F	G	H
	Vacuum inlet direction	❶ Pad dia.	Form	❷ Material *1	❸ Vacuum inlet	❹ Connection thread								
ZP	Y	10	D	N S U F GN GS	N4 N6 U4 U6	A5	62	41	25	2.5	M5 x 0.8	21	8	4
		16					63	42	26					
		10				A6	67	41	25	2.5	M6 x 1	26	8	4
		16					68	42	26					
		25					74	48	30	3.5				
		40					83	57	39	6				
		25				A8	64	48	30	3.5	M8 x 1	16	12	4
		40					73	57	39	6				

Dimensions Per Vacuum Inlet

Model							J	K	Fitting part min. hole size
	Vacuum inlet direction	❶ Pad dia.	Form	❷ Material *1	❸ Vacuum inlet	❹ Connection thread			
ZP	Y	10 16 25	D	N S U F GN GS	N4 U4	A5 A6	14.5	5	Ø 1.8
					N6 U6		16.5	7	Ø 2.5
		40			N6 U6	A6 A8	16.5	7	Ø 2.5

*1 N: NBR, S: Silicone rubber, U: Urethane rubber, F: FKM, GN: Conductive NBR, GS: Conductive silicone rubber
*2 Indicates the minimum hole size of the adapter or vacuum pad

Dimensions/Models

With adapter/barb fitting Ø 10 to Ø 40

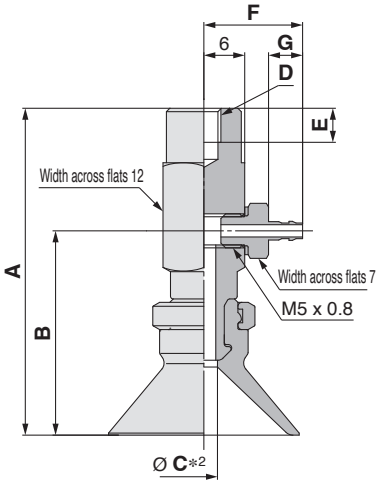

Construction p. 96
Adapter Assembly p. 102

ZPY 10 D N - N4 - B5
❶ ❷ ❸ ❹

❸ Vacuum inlet (Barb fitting)

N4	For Ø 4 nylon tubing	M-5AN-4
N6	For Ø 6 nylon tubing	M-5AN-6
U4	For Ø 4 soft tubing	M-5AU-4
U6	For Ø 6 soft tubing	M-5AU-6

❹ Connection thread (Female thread)

B5	M5 x 0.8
B6	M6 x 1
B8	M8 x 1.25

Model							A	B	C*2	D	E
	Vacuum inlet direction	❶ Pad dia.	Form	❷ *1 Material	❸ Vacuum inlet	❹ Connection thread					
ZP	Y	10	D	N S U F GN GS	N4 N6 U4 U6	B5	41	25	2.5	M5 x 0.8	5
		16					42	26			
		25					48	30	3.5		
		10				B6	41	25	2.5	M6 x 1	6
		16					42	26			
		25					48	30	3.5		
		40					57	39	6		
		25				B8	48	30	3.5	M8 x 1.25	8
		40					57	39	6		

Dimensions Per Vacuum Inlet

Model							F	G	Fitting part min. hole size
	Vacuum inlet direction	❶ Pad dia.	Form	❷ *1 Material	❸ Vacuum inlet	❹ Connection thread			
ZP	Y	10 16	D	N S U F GN GS	N4 U4	B4 B5	14.5	5	Ø 1.8
					N6 U6		16.5	7	Ø 2.5
		25			N4 U4	B5 B6 B8	14.5	5	Ø 1.8
					N6 U6		16.5	7	Ø 2.5
		40			N6 U6	B6 B8	16.5	7	Ø 2.5

*1 N: NBR, S: Silicone rubber, U: Urethane rubber, F: FKM, GN: Conductive NBR, GS: Conductive silicone rubber
*2 Indicates the minimum hole size of the adapter or vacuum pad

Dimensions/Models

With buffer ∅10 to ∅40

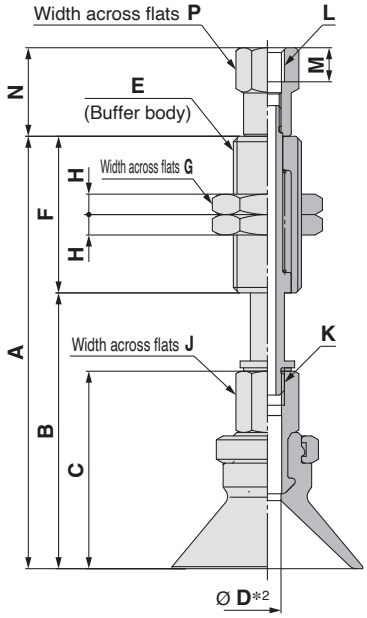

Construction	p. 118
Buffer Assembly	p. 103

ZPT 10 D N J 10 - B5 - A10

❶ ❷ ❹

❸ Buffer specification

J	Rotating
K	Non-rotating

❻ Connection thread (Male thread)

A10	M10 x 1
A14	M14 x 1

❺ Vacuum inlet (Female thread)

B5	M5 x 0.8
B01	Rc1/8
N01	NPT1/8
T01	NPTF1/8

Model									A	B	C	D*2	E	F	G	H	J	K
	Vacuum inlet direction	❶ Pad dia.	Form	❷ Material *1	❸ Buffer spec.	❹ Buffer stroke	❺ Vacuum inlet	❻ Connection thread										
ZP	T	10	D	N S U F GN GS	J K	10	B5 04 06 N6 U6	A10	58.5	35.5	24	J: 2.5 K: 2	M10 x 1	23	14	3	8	M5 x 0.8
						20			96.5	45.5				51				
						30			106.5	55.5								
						40			142.5	65.5				77				
						50			152.5	75.5								
		16				10			59.5	36.5	25			23				
						20			97.5	46.5				51				
						30			107.5	56.5								
						40			143.5	66.5				77				
						50			153.5	76.5								
		25				10			63.5	40.5	29			23				
						20			101.5	50.5				51				
						30			111.5	60.5								
						40			147.5	70.5				77				
						50			157.5	80.5								
		40				10	B5 B01 N01 T01 06 08 N6 U6	A14	105	55	42.5	4	M14 x 1	50	19	4	12	M8 x 1.25
						20			115	65								
						30			125	75								
						50			170	95				75				

Dimensions Per Vacuum Inlet: Female Thread

Model									L	M	N	P
	Vacuum inlet direction	❶ Pad dia.	Form	❷ Material *1	❸ Buffer spec.	❹ Buffer stroke	❺ Vacuum inlet	❻ Connection thread				
ZP	T	10 16 25	D	N S U F GN GS	J K	10 20 30 40 50	B5	A10	M5 x 0.8	5	13	8
		40				10	B5	A14	M5 x 0.8	4.5	15	10
						20 30 50				5	9	
						10	B01 N01 T01		Rc1/8 NPT1/8 NPTF1/8		16.5	13
						20 30 50					12	

*1 N: NBR, S: Silicone rubber, U: Urethane rubber, F: FKM, GN: Conductive NBR, GS: Conductive silicone rubber
*2 Indicates the minimum hole size of the adapter or vacuum pad

Dimensions/Models

With buffer Ø 10 to Ø 40

ZPT 10 D N J 10 - 04 - A10

❶ ❷ ❸ ❹ ❺ ❻

❸ Buffer specification

J	Rotating
K	Non-rotating

❻ Connection thread (Male thread)

A10	M10 x 1
A14	M14 x 1

❺ Vacuum inlet

			Pad diameter Ø 10 to Ø 25	Pad diameter Ø 40
04	Ø 4	One-touch fitting	KQ2H04-M5N	
06	Ø 6	One-touch fitting	KQ2H06-M5N	KQ2H06-01NS
08	Ø 8	One-touch fitting		KQ2H08-01NS
N6	For Ø 6 nylon tubing	Barb fitting		
U6	For Ø 6 soft tubing	Barb fitting		

Vacuum inlet: One-touch fitting

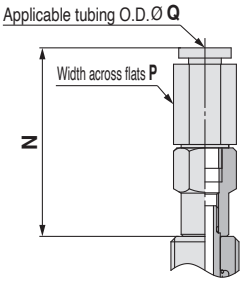

Vacuum inlet: Barb fitting

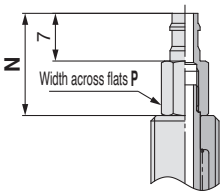

Construction p. 118
Buffer Assembly p. 103

Dimensions Per Vacuum Inlet: One-touch Fitting

Model: Vacuum inlet direction	❶ Pad dia.	Form	❷ Material *1	❸ Buffer spec.	❹ Buffer stroke	❺ Vacuum inlet	❻ Connection thread	N	P	Q	Fitting part min. hole size
ZP T	10 16 25	D	N S U F GN GS	J K	10 20 30 40 50	04	A10	27.7	8	4	Ø 2.5
ZP T	10 16 25	D	N S U F GN GS	J K	10 20 30 40 50	06	A10	27.7	10	6	Ø 2.5
ZP T	40	D	N S U F GN GS	J K	10	06	A14	31.8	10	6	Ø 4.5
ZP T	40	D	N S U F GN GS	J K	10	08	A14	35.9	14	8	Ø 6
ZP T	40	D	N S U F GN GS	J K	20 30 50	06	A14	19.9	12	6	Ø 3
ZP T	40	D	N S U F GN GS	J K	20 30 50	08	A14	24.9	14	8	Ø 3

Dimensions Per Vacuum Inlet: Barb Fitting

Model: Vacuum inlet direction	❶ Pad dia.	Form	❷ Material *1	❸ Buffer spec.	❹ Buffer stroke	❺ Vacuum inlet	❻ Connection thread	N	P	Fitting part min. hole size
ZP T	10 16 25	D	N S U F GN GS	J K	10 20 30 40 50	N6	A10	15	6	Ø 2.5
ZP T	10 16 25	D	N S U F GN GS	J K	10 20 30 40 50	U6	A10	15	6	Ø 2.5
ZP T	40	D	N S U F GN GS	J K	10	N6	A14	19	10	Ø 2.5
ZP T	40	D	N S U F GN GS	J K	10	U6	A14	19	10	Ø 2.5
ZP T	40	D	N S U F GN GS	J K	20 30 50	N6	A14	12	10	Ø 2.5
ZP T	40	D	N S U F GN GS	J K	20 30 50	U6	A14	12	10	Ø 2.5

*1 N: NBR, S: Silicone rubber, U: Urethane rubber, F: FKM, GN: Conductive NBR, GS: Conductive silicone rubber

Dimensions/Models

With buffer/One-touch fitting Ø 10 to Ø 40

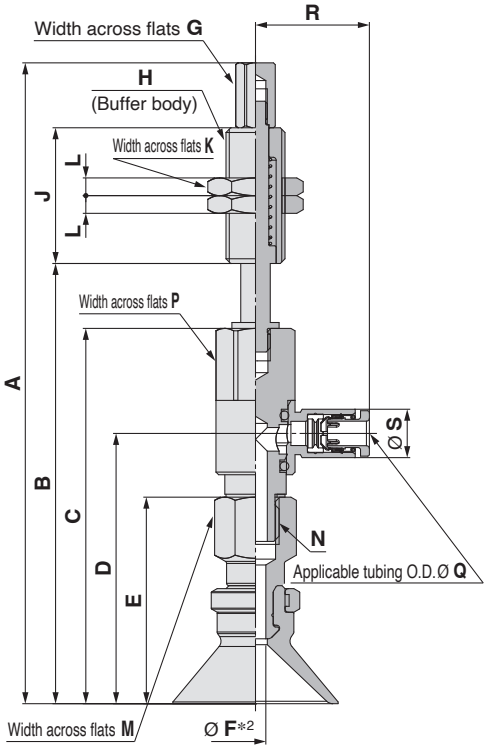

Construction	p. 118
Buffer Assembly	p. 104

ZPR 10 D N J 10 - 04 - A10

❶ ❷ ❹

Buffer specification ❸

J	Rotating
K	Non-rotating

❻ Connection thread (Male thread)

A10	M10 x 1
A14	M14 x 1

❺ Vacuum inlet (One-touch fitting)

04	Ø 4
06	Ø 6
08	Ø 8

Model									A	B	C	D	E	*2 F	G	H	J	K	L	M	N
	Vacuum inlet direction	❶ Pad dia.	Form	❷ *1 Material	❸ Buffer spec.	❹ Buffer stroke	❺ Vacuum inlet	❻ Connection thread													
ZP	R	10	D	N S U F GN GS	J K	10	04 06	A10	94	60	49	32.9	24	2.5	6	M10 x 1	23	14	3	8	M5 x 0.8
						20			132	70							51				
						30			142	80											
						40			178	90							77				
						50			188	100											
		16				10			95	61	50	33.9	25				23				
						20			133	71							51				
						30			143	81											
						40			179	91							77				
						50			189	101											
		25				10	04 06 08		108.6	74.6	63.6	45.8	35	3.5			23			12	M8 x 1.25
						20			146.6	84.6							51				
						30			156.6	94.6											
						40			192.6	104.6							77				
						50			202.6	114.6											
		40				10	06 08	A14	151.1	83.1	71.1	53.3	42.5	4	10	M14 x 1	50	19	4	12	M8 x 1.25
						20			148.1	93.1											
						30			158.1	103.1											
						50			203.1	123.1							75				

Dimensions Per Vacuum Inlet

Model									P	Q	R	S	Fitting part min. hole size
	Vacuum inlet direction	❶ Pad dia.	Form	❷ *1 Material	❸ Buffer spec.	❹ Buffer stroke	❺ Vacuum inlet	❻ Connection thread					
ZP	R	10 16	D	N S U F GN GS	J K	10 20 30 40 50	04	A10	8	4	17.5	8.2	Ø 2.5
							06			6	18.3	10.4	Ø 4
		25				10 20 30 40 50	04		12	4	19.3	8.2	Ø 3
							06			6	20.5	10.4	Ø 4.5
							08		16	8	23.5	13.2	Ø 6
		40				10 20 30 50	06	A14	12	6	20.5	10.4	Ø 4.5
							08		16	8	23.5	13.2	Ø 6

*1 N: NBR, S: Silicone rubber, U: Urethane rubber, F: FKM, GN: Conductive NBR, GS: Conductive silicone rubber
*2 Indicates the minimum hole size of the adapter or vacuum pad

Dimensions/Models

With buffer/barb fitting Ø 10 to Ø 40

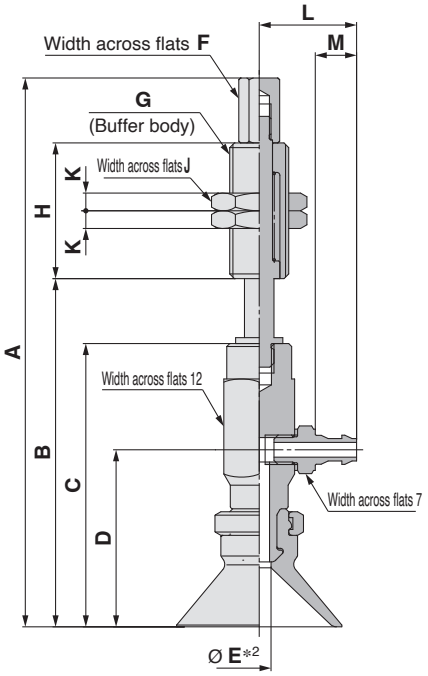

Construction p. 118
Buffer Assembly p. 105

ZPY 10 D N J 10 - N4 - A10
❶ ❷ ❹

❸ Buffer specification

J	Rotating
K	Non-rotating

❻ Connection thread (Male thread)

A10	M10 x 1
A14	M14 x 1

❺ Vacuum inlet (Barb fitting)

N4	For Ø 4 nylon tubing	M-5AN-4
N6	For Ø 6 nylon tubing	M-5AN-6
U4	For Ø 4 soft tubing	M-5AU-4
U6	For Ø 6 soft tubing	M-5AU-6

Model									A	B	C	D	E*2	F	G	H	J	K
	Vacuum inlet direction	❶ Pad dia.	Form	❷ Material*1	❸ Buffer spec.	❹ Buffer stroke	❺ Vacuum inlet	❻ Connection thread										
ZP	Y	10	D	N S U F GN GS	J K	10	N4 N6 U4 U6	A10	86	52	41	25	2.5	6	M10 x 1	23	14	3
						20			124	62						51		
						30			134	72								
						40			170	82						77		
						50			180	92								
		16				10			87	53	42	26				23		
						20			125	63						51		
						30			135	73								
						40			171	83						77		
						50			181	93								
		25				10			93	59	48	30	3.5	6	M10 x 1	23	14	3
						20			131	69						51		
						30			141	79								
						40			177	89						77		
						50			187	99								
		40				10	N6 U6	A14	137	69	57	39	6	10	M14 x 1	50	19	4
						20			134	79								
						30			144	89								
						50			189	109						75		

Dimensions Per Vacuum Inlet

Model									L	M	Fitting part min. hole size
	Vacuum inlet direction	❶ Pad dia.	Form	❷ Material*1	❸ Buffer spec.	❹ Buffer stroke	❺ Vacuum inlet	❻ Connection thread			
ZP	Y	10 16 25	D	N S U F GN GS	J K	10 20 30 40 50	N4 U4	A10	14.5	5	Ø 1.8
							N6 U6		16.5	7	Ø 2.5
		40				10 20 30 50	N6 U6	A14	16.5	7	Ø 2.5

*1 N: NBR, S: Silicone rubber, U: Urethane rubber, F: FKM, GN: Conductive NBR, GS: Conductive silicone rubber
*2 Indicates the minimum hole size of the adapter or vacuum pad

Basic Pad *ZP Series*
Construction

With adapter | Flat type: Ø 2 to Ø 8 | Bellows type: Ø 6 to Ø 8 | Thin flat type/Thin flat type with ribs: Ø 10 to Ø 16

Vacuum inlet direction Vertical T Type/ZP□T

ZP□T□-(A5/A6)

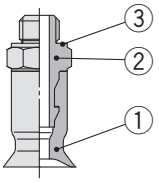

ZP□T□-(B4/B5)

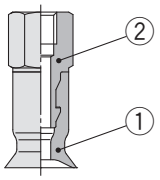

Component Parts

No.	Description	Material	Note
1	**Pad**	NBR, Silicone rubber, Urethane rubber, FKM, Conductive NBR, Conductive silicone rubber	Flat type Bellows type Thin flat type Thin flat type with ribs
2	**Adapter**	Brass (Electroless nickel plating)	**ZPT**
		Stainless steel	**ZPST**
3	**Gasket**	Stainless steel/NBR	**ZPT**
		Stainless steel/FKM	**ZPST**

Vacuum inlet direction Lateral R Type/ZPR

ZPR□-(04/06)-(A5/A6)

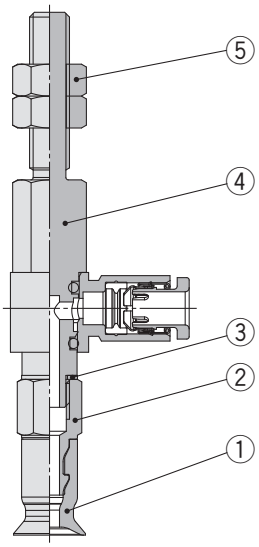

ZPR□-(04/06)-(B4/B5)

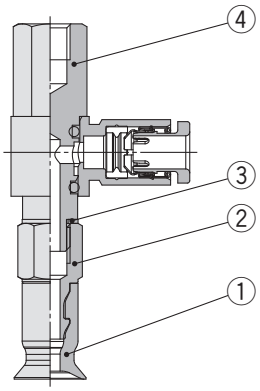

Component Parts

No.	Description	Material	Note
1	**Pad**	NBR, Silicone rubber, Urethane rubber, FKM, Conductive NBR, Conductive silicone rubber	Flat type Bellows type Thin flat type Thin flat type with ribs
2	**Adapter**	Brass (Electroless nickel plating)	
3	**Gasket**	Stainless steel/NBR	
4	**Adapter** (With One-touch fitting)	Brass (Electroless nickel plating), PBT, NBR, Stainless steel, POM	
5	**Nut**	Rolled steel (Zinc chromated)	M5 x 0.8 M6 x 1

Vacuum inlet direction Lateral Y Type/ZPY

ZPY□-(N4/N6/U4/U6)-(A5/A6)

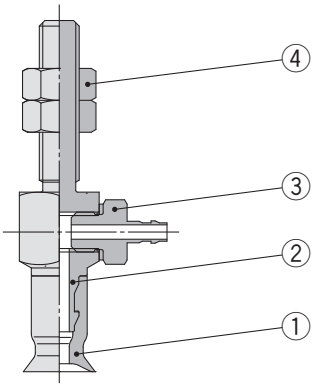

ZPY□-(N4/N6/U4/U6)-(B4/B5)

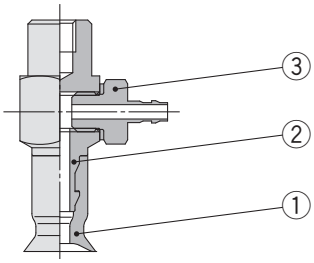

Component Parts

No.	Description	Material	Note
1	**Pad**	NBR, Silicone rubber, Urethane rubber, FKM, Conductive NBR, Conductive silicone rubber	Flat type Bellows type Thin flat type Thin flat type with ribs
2	**Adapter**	Brass (Electroless nickel plating)	
3	**Barb fitting**	—	
4	**Nut**	Rolled steel (Zinc chromated)	M5 x 0.8 M6 x 1

With buffer | Flat type: Ø 2 to Ø 8 | Bellows type: Ø 6 to Ø 8 | Thin flat type/Thin flat type with ribs: Ø 10 to Ø 16

Vacuum inlet direction Vertical T Type/ZPT

ZPT□-(B3/B5)-A8 ZPT□-(04/06)-A8 ZPT□-(N4/U4)-A8

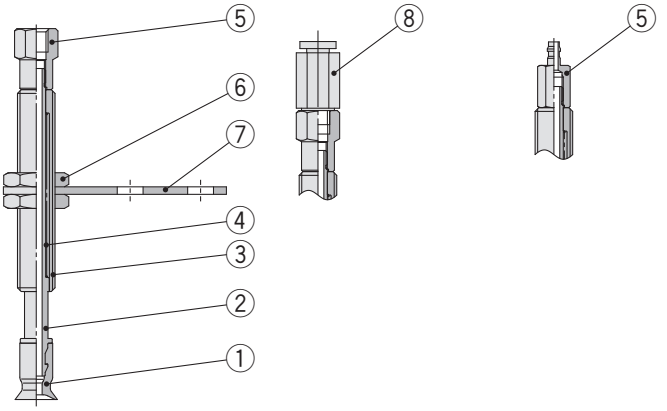

Component Parts

No.	Description	Material	Note
1	**Pad**	NBR, Silicone rubber, Urethane rubber, FKM, Conductive NBR, Conductive silicone rubber	Flat type Bellows type Thin flat type Thin flat type with ribs
2	**Piston rod**	Stainless steel	
3	**Buffer body**	Brass (Electroless nickel plating)	
4	**Return spring**	Stainless steel	
5	**Buffer adapter**	Brass (Electroless nickel plating)	
6	**Nut**	Carbon steel (Zinc chromated)	M8 x 1
7	**Buffer plate**	Steel (Trivalent chromated)	
8	**Fitting**	—	

Vacuum inlet direction Lateral R Type/ZPR

ZPR□-(04/06)-A8

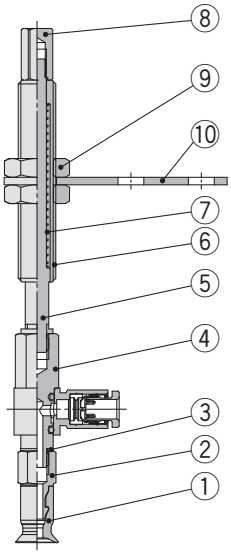

Component Parts

No.	Description	Material	Note
1	**Pad**	NBR, Silicone rubber, Urethane rubber, FKM, Conductive NBR, Conductive silicone rubber	Flat type Bellows type Thin flat type Thin flat type with ribs
2	**Adapter**	Brass (Electroless nickel plating)	
3	**Gasket**	Stainless steel 304/NBR	
4	**Adapter** (With One-touch fitting)	Brass (Electroless nickel plating), PBT, NBR, Stainless steel, POM	
5	**Piston rod**	Stainless steel	
6	**Buffer body**	Brass (Electroless nickel plating)	
7	**Return spring**	Stainless steel	
8	**Buffer adapter**	Brass (Electroless nickel plating)	
9	**Nut**	Carbon steel (Zinc chromated)	M8 x 1
10	**Buffer plate**	Steel (Trivalent chromated)	

Vacuum inlet direction Lateral Y Type/ZPY

ZPY□-(N4/N6/U4/U6)-A8

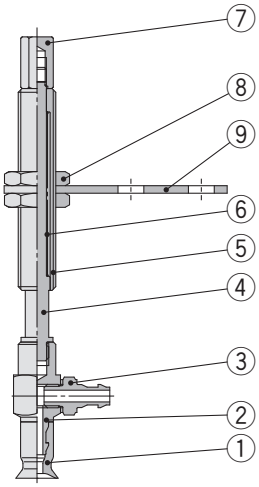

Component Parts

No.	Description	Material	Note
1	**Pad**	NBR, Silicone rubber, Urethane rubber, FKM, Conductive NBR, Conductive silicone rubber	Flat type Bellows type Thin flat type Thin flat type with ribs
2	**Adapter**	Brass (Electroless nickel plating)	
3	**Barb fitting**	—	
4	**Piston rod**	Stainless steel	
5	**Buffer body**	Brass (Electroless nickel plating)	
6	**Return spring**	Stainless steel	
7	**Buffer adapter**	Brass (Electroless nickel plating)	
8	**Nut**	Carbon steel (Zinc chromated)	M8 x 1
9	**Buffer plate**	Steel (Trivalent chromated)	

With adapter | Flat type: Ø 10 to Ø 50 | Flat type with ribs: Ø 10 to Ø 50 | Bellows type: Ø 10 to Ø 50 | Deep type: Ø 10 to Ø 40

Vacuum inlet direction Vertical T Type/ZP□T

ZP□T□-(A5/A6/A8)

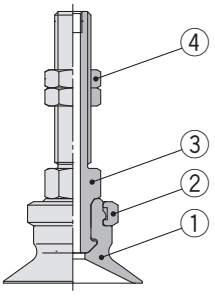

ZP□T□-(AS5/AS6)

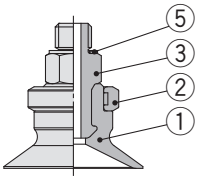

ZP□T□-(AG01/AG02)

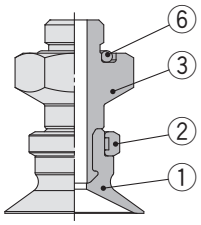

ZP□T□-(B5/B6/B8/BG01/BG02/B01/N01/T01)

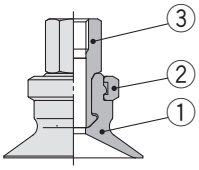

Component Parts

No.	Description	Material	Note	
1	**Pad**	NBR, Silicone rubber, Urethane rubber, FKM, Conductive NBR, Conductive silicone rubber	Flat type Flat type with ribs Bellows type Deep type	
2	**Lock ring**	Brass (Electroless nickel plating)	**ZPT**	
		Stainless steel	**ZPST**	
3	**Adapter**	Brass (Electroless nickel plating)	**ZPT**	
		Stainless steel	**ZPST**	
4	**Nut**	Rolled steel (Zinc chromated)	M5 x 0.8 M6 x 1	**ZPT**
		Carbon steel (Zinc chromated)	M8 x 1	
		Stainless steel	**ZPST**	
5	**Gasket**	Stainless steel/NBR	**ZPT**	
		Stainless steel/FKM	**ZPST**	
6	**O-ring**	Silicone rubber (Blue)		

Vacuum inlet direction Lateral R Type/ZPR

ZPR□-(04/06/08)-(A5/A6/A8)

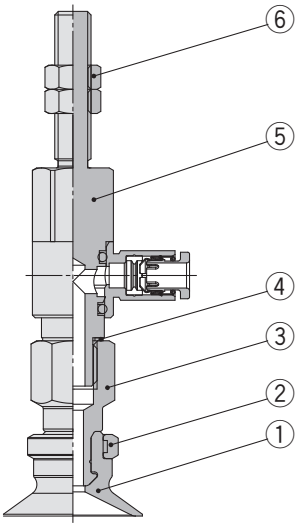

ZPR□-(04/06/08)-(B5/B6/B8)

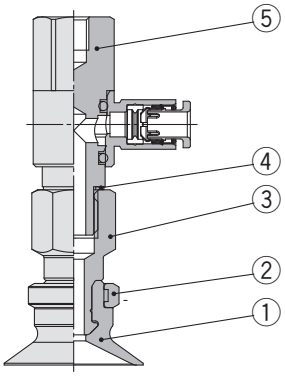

Component Parts

No.	Description	Material	Note
1	**Pad**	NBR, Silicone rubber, Urethane rubber, FKM, Conductive NBR, Conductive silicone rubber	Flat type Flat type with ribs Bellows type Deep type
2	**Lock ring**	Brass (Electroless nickel plating)	
3	**Adapter**	Brass (Electroless nickel plating)	
4	**Gasket**	Stainless steel 304/NBR	
5	**Adapter** (With One-touch fitting)	Brass (Electroless nickel plating), PBT, NBR, Stainless steel, POM	
6	**Nut**	Rolled steel (Zinc chromated)	M5 x 0.8 M6 x 1
		Carbon steel (Zinc chromated)	M8 x 1

Vacuum inlet direction Lateral Y Type/ZPY

ZPY□-(N4/N6/U4/U6)-(A5/A6/A8)

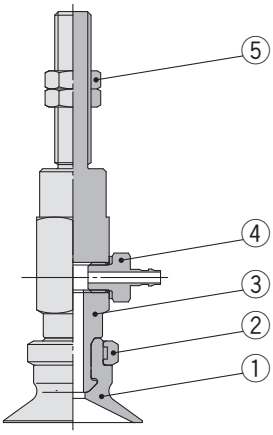

ZPY□-(N4/N6/U4/U6)-(B5/B6/B8)

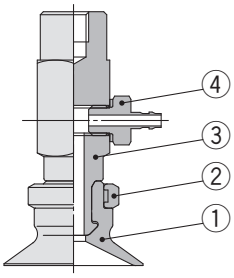

Component Parts

No.	Description	Material	Note
1	**Pad**	NBR, Silicone rubber, Urethane rubber, FKM, Conductive NBR, Conductive silicone rubber	Flat type Flat type with ribs Bellows type Deep type
2	**Lock ring**	Brass (Electroless nickel plating)	
3	**Adapter**	Brass (Electroless nickel plating)	
4	**Barb fitting**	—	
5	**Nut**	Rolled steel (Zinc chromated)	M5 x 0.8 M6 x 1
		Carbon steel (Zinc chromated)	M8 x 1

With buffer | Flat type: Ø 10 to Ø 50 | Flat type with ribs: Ø 10 to Ø 50 | Bellows type: Ø 10 to Ø 50 | Deep type: Ø 10 to Ø 40

Vacuum inlet direction Vertical T Type/ZPT

ZPT□-(B5/B01/N01/T01)-(A10/A14)

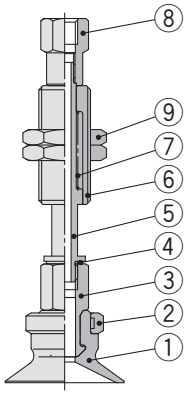

ZPT□-(04/06/08)-(A10/A14)

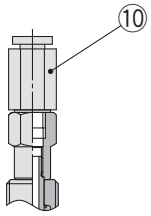

ZPT□-(N6/U6)-(A10/A14)

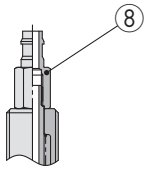

Component Parts

No.	Description	Material	Note
1	**Pad**	NBR, Silicone rubber, Urethane rubber, FKM, Conductive NBR, Conductive silicone rubber	Flat type Flat type with ribs Bellows type Deep type
2	**Lock ring**	Brass (Electroless nickel plating)	
3	**Adapter**	Brass (Electroless nickel plating)	
4	**Gasket**	Stainless steel/NBR	
5	**Piston rod**	Stainless steel	
6	**Buffer body**	Brass (Electroless nickel plating)	
7	**Return spring**	Stainless steel	
8	**Buffer adapter**	Brass (Electroless nickel plating)	
9	**Nut**	Steel (Zinc chromated)	M10 x 1 M14 x 1
10	**Fitting**	—	

Vacuum inlet direction Lateral R Type/ZPR

ZPR□-(04/06/08)-(A10/A14)

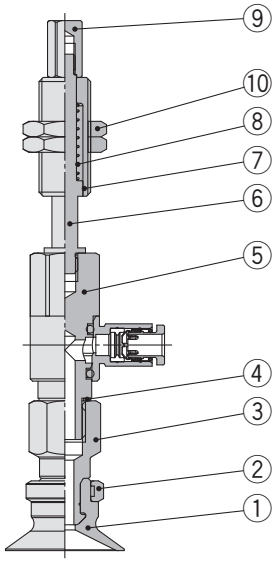

Component Parts

No.	Description	Material	Note
1	**Pad**	NBR, Silicone rubber, Urethane rubber, FKM, Conductive NBR, Conductive silicone rubber	Flat type Flat type with ribs Bellows type Deep type
2	**Lock ring**	Brass (Electroless nickel plating)	
3	**Adapter**	Brass (Electroless nickel plating)	
4	**Gasket**	Stainless steel/NBR	
5	**Adapter** (With One-touch fitting)	Brass (Electroless nickel plating), PBT, NBR, Stainless steel, POM	
6	**Piston rod**	Stainless steel	
7	**Buffer body**	Brass (Electroless nickel plating)	
8	**Return spring**	Stainless steel	
9	**Buffer adapter**	Brass (Electroless nickel plating)	
10	**Nut**	Steel (Zinc chromated)	M10 x 1 M14 x 1

Vacuum inlet direction Lateral Y Type/ZPY

ZPY□-(N4/N6/U4/U6)-(A10/A14)

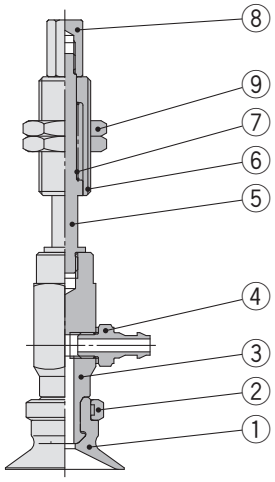

Component Parts

No.	Description	Material	Note
1	**Pad**	NBR, Silicone rubber, Urethane rubber, FKM, Conductive NBR, Conductive silicone rubber	Flat type Flat type with ribs Bellows type Deep type
2	**Lock ring**	Brass (Electroless nickel plating)	
3	**Adapter**	Brass (Electroless nickel plating)	
4	**Barb fitting**	—	
5	**Piston rod**	Stainless steel	
6	**Buffer body**	Brass (Electroless nickel plating)	
7	**Return spring**	Stainless steel	
8	**Buffer adapter**	Brass (Electroless nickel plating)	
9	**Nut**	Steel (Zinc chromated)	M10 x 1 M14 x 1

Construction

With adapter Flat type: Ø 10 to Ø 50

Vacuum inlet direction Vertical T Type/ZPT□F

ZPT□F□-B5-(A8/A10/A14)

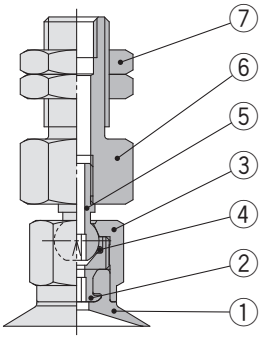

ZPT□F□-(B5/B8/B01/N01/T01)

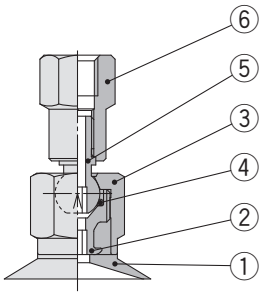

Ø 10 to Ø 32

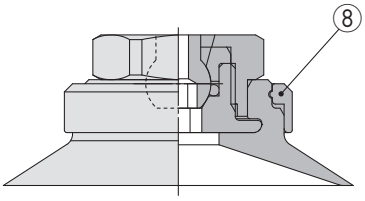

Ø 40, Ø 50

Component Parts

No.	Description	Material	Note
1	**Pad**	NBR, Silicone rubber, Urethane rubber, FKM, Conductive NBR, Conductive silicone rubber	Flat type
2	**Adapter**	Brass (Electroless nickel plating)	
3	**Shaft cover**	Stainless steel	
4	**O-ring**	FKM	
5	**Shaft**	Stainless steel	
6	**Shaft adapter**	Brass (Electroless nickel plating)	
7	**Nut**	Carbon steel (Zinc chromated)	M8 x 1
		Steel (Zinc chromated)	M10 x 1 M14 x 1
8	**Lock ring**	Aluminum (Clear anodized)	Pad diameter: Ø 40, Ø 50

Vacuum inlet direction Lateral R Type/ZPR□F

ZPR□F□-(04/06/08)-(B5/B8)

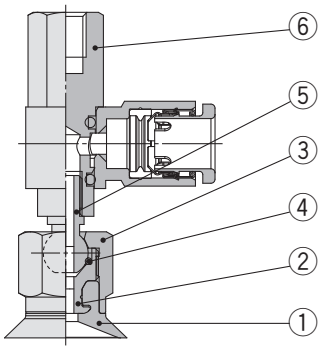

Ø 10 to Ø 32

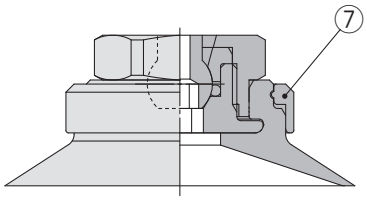

Ø 40, Ø 50

Component Parts

No.	Description	Material	Note
1	**Pad**	NBR, Silicone rubber, Urethane rubber, FKM, Conductive NBR, Conductive silicone rubber	Flat type
2	**Adapter**	Brass (Electroless nickel plating)	
3	**Shaft cover**	Stainless steel	
4	**O-ring**	FKM	
5	**Shaft**	Stainless steel	
6	**Shaft adapter** (With One-touch fitting)	Brass (Electroless nickel plating), PBT, NBR, Stainless steel, POM	
7	**Lock ring**	Aluminum (Clear anodized)	Pad diameter: Ø 40, Ø 50

With buffer Flat type: Ø 10 to Ø 50

Vacuum inlet direction Vertical T Type/ZPT□F

ZPT□F□-(B5/B01/N01/T01)-(A10/A14) **ZPT□F□-(04/06/08)-(A10/A14)**

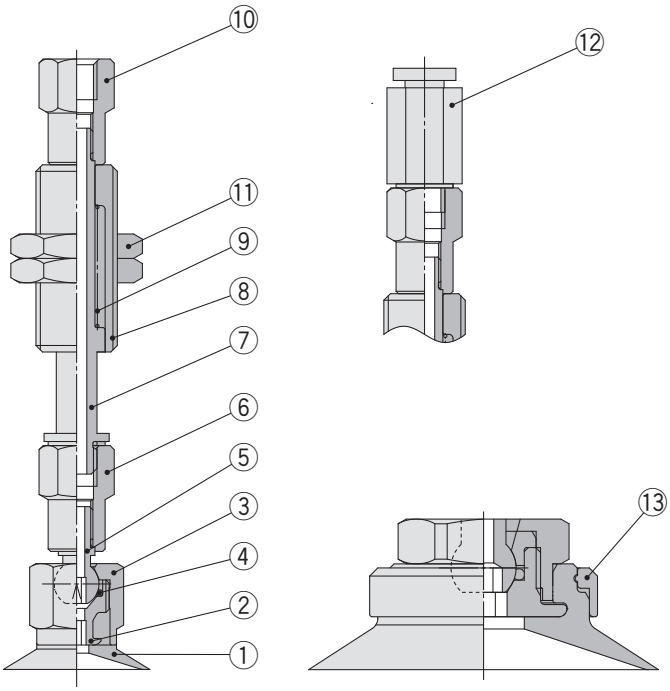

Ø 10 to Ø 32 Ø 40, Ø 50

Component Parts

No.	Description	Material	Note
1	**Pad**	NBR, Silicone rubber, Urethane rubber, FKM, Conductive NBR, Conductive silicone rubber	Flat type
2	**Adapter**	Brass (Electroless nickel plating)	
3	**Shaft cover**	Stainless steel	
4	**O-ring**	FKM	
5	**Shaft**	Stainless steel	
6	**Shaft adapter**	Brass (Electroless nickel plating)	
7	**Piston rod**	Stainless steel	
8	**Buffer body**	Brass (Electroless nickel plating)	
9	**Return spring**	Stainless steel	
10	**Buffer adapter**	Brass (Electroless nickel plating)	
11	**Nut**	Steel (Zinc chromated)	M10 x 1 M14 x 1
12	**Fitting**	—	
13	**Lock ring**	Aluminum (Clear anodized)	Pad diameter: Ø 40, Ø 50

Vacuum inlet direction Lateral R Type/ZPR□F

ZPR□F□-(04/06/08)-(A10/A14)

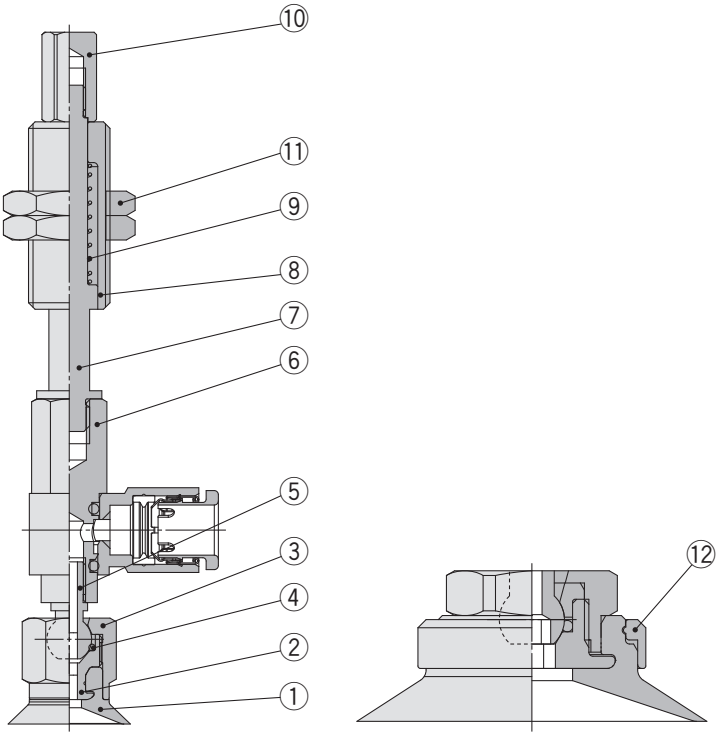

Ø 10 to Ø 32 Ø 40, Ø 50

Component Parts

No.	Description	Material	Note
1	**Pad**	NBR, Silicone rubber, Urethane rubber, FKM, Conductive NBR, Conductive silicone rubber	Flat type
2	**Adapter**	Brass (Electroless nickel plating)	
3	**Shaft cover**	Stainless steel	
4	**O-ring**	FKM	
5	**Shaft**	Stainless steel	
6	**Shaft adapter** (With One-touch fitting)	Brass (Electroless nickel plating), PBT, NBR, Stainless steel, POM	
7	**Piston rod**	Stainless steel	
8	**Buffer body**	Brass (Electroless nickel plating)	
9	**Return spring**	Stainless steel	
10	**Buffer adapter**	Brass (Electroless nickel plating)	
11	**Nut**	Steel (Zinc chromated)	M10 x 1 M14 x 1
12	**Lock ring**	Aluminum (Clear anodized)	Pad diameter: Ø 40, Ø 50

Mounting Bracket Assembly

■Adapter Assembly: Vacuum Inlet Direction Vertical T Type/ZPT

Product part no.

ZPT ① ② □ - ③

- ① Pad diameter
- ② Pad form
- □ Pad material
- ③ Vacuum inlet (Male/Female thread)

Component parts

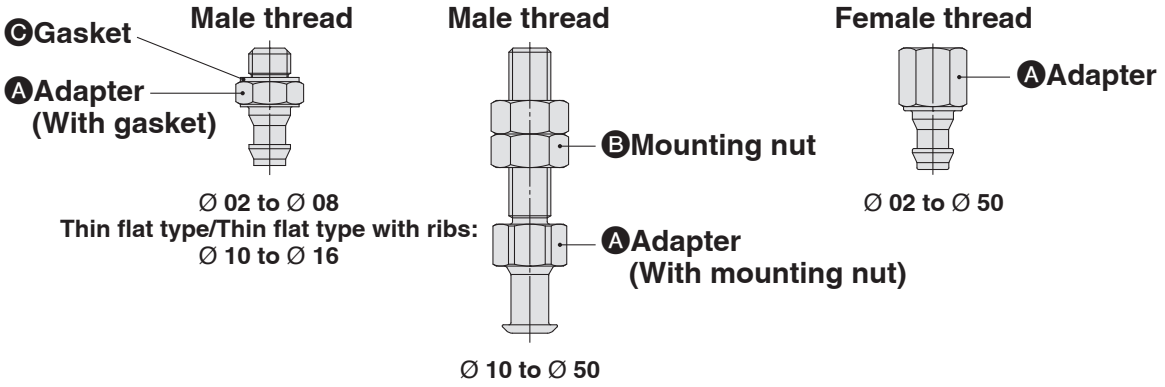

		Symbol	❶ Pad diameter symbol														
			02	04	06	08	10	13	16	10	13	16	20	25	32	40	50
❷ Pad form	Flat type	U	●	●	●	●	–	–	–	●	●	●	●	●	●	●	●
	Flat type with ribs	C	–	–	–	–	–	–	–	●	●	●	●	●	●	●	●
	Bellows type	B	–	–	●	●	–	–	–	●	●	●	●	●	●	●	●
	Thin flat type	UT	–	–	–	–	●	●	●	–	–	–	–	–	–	–	–
	Thin flat type with ribs	CT	–	–	–	–	●	●	●	–	–	–	–	–	–	–	–
	Deep type	D	–	–	–	–	–	–	–	●	–	●	–	●	–	●	–
Ⓐ Adapter ❸ Vacuum inlet, Male thread	M5 x 0.8	A5	ZPT1-A5							ZPT2-A5			–			–	
	M6 x 1	A6	ZPT1-A6							ZPT2-A6			ZPT3-A6			ZPT4-A6	
	M8 x 1	A8	–							–			ZPT3-A8			ZPT4-A8	
Ⓐ Adapter ❸ Vacuum inlet, Female thread	M4 x 0.7	B4	ZPT1-B4							–			–			–	
	M5 x 0.8	B5	ZPT1-B5							ZPT2-B5			ZPT3-B5			–	
	M6 x 1	B6	–							ZPT2-B6			ZPT3-B6			ZPT4-B6	
	M8 x 1.25	B8	–							–			ZPT3-B8			ZPT4-B8	
	Rc1/8	B01	–							ZPT2-B01			ZPT3-B01			ZPT4-B01	
	NPT1/8	N01	–							ZPT2-N01			ZPT3-N01			ZPT4-N01	
	NPTF1/8	T01	–							ZPT2-T01			ZPT3-T01			ZPT4-T01	
Ⓑ Mounting nut (Single unit)	M5 x 0.8		–							NTJ-015A			–			–	
	M6 x 1		–							ZPNA-M6			ZPNA-M6			ZPNA-M6	
	M8 x 1		–							–			ZPNA-M8			ZPNA-M8	
Ⓒ Gasket (Single unit)	For M5 x 0.8		M-5G2							–			–			–	
	For M6 x 1		M-6G							–			–			–	

Adapter Assembly: With One-touch Fitting, Vacuum Inlet Direction Lateral R Type/ZPR

Product part no.

ZPR ① ② □ - ③ - ④

- ① Pad diameter
- ② Pad form
- □ Pad material
- ③ Vacuum inlet (One-touch fitting)
- ④ Connection thread (Male/Female thread)

Component parts

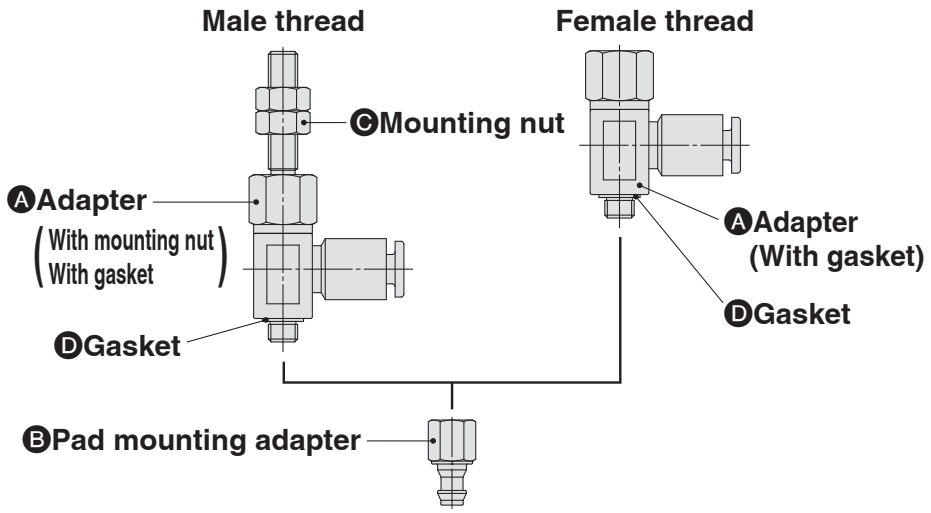

				Symbol	① Pad diameter symbol														
					02	04	06	08	10	13	16	10	13	16	20	25	32	40	50
② Pad form			Flat type	U	●	●	●	●	–	–	–	●	●	●	●	●	●	●	●
			Flat type with ribs	C	–	–	–	–	–	–	–	●	●	●	●	●	●	●	●
			Bellows type	B	–	–	●	●	–	–	–	●	●	●	●	●	●	●	●
			Thin flat type	UT	–	–	–	–	●	●	●	–	–	–	–	–	–	–	–
			Thin flat type with ribs	CT	–	–	–	–	●	●	●	–	–	–	–	–	–	–	–
			Deep type	D	–	–	–	–	–	–	–	●	–	●	–	●	–	●	–
Ⓐ Adapter	③ Vacuum inlet (One-touch fitting)	Ø 4 04	④ Connection thread: Male thread	M5 x 0.8	A5	ZPRS-04-A5						ZPRS-04-A5			–			–	
				M6 x 1	A6	ZPRS-04-A6						ZPRS-04-A6			ZPRL-04-A6			–	
				M8 x 1	A8	–						–			ZPRL-04-A8			–	
			Female thread	M4 x 0.7	B4	ZPRS-04-B4						–			–			–	
				M5 x 0.8	B5	ZPRS-04-B5						ZPRS-04-B5			ZPRL-04-B5			–	
				M6 x 1	B6	–						ZPRS-04-B6			ZPRL-04-B6			–	
				M8 x 1.25	B8	–						–			ZPRL-04-B8			–	
		Ø 6 06	Male thread	M5 x 0.8	A5	ZPRS-06-A5						ZPRS-06-A5			–			–	
				M6 x 1	A6	ZPRS-06-A6						ZPRS-06-A6			ZPRL-06-A6			ZPRL-06-A6	
				M8 x 1	A8	–						–			ZPRL-06-A8			ZPRL-06-A8	
			Female thread	M4 x 0.7	B4	ZPRS-06-B4						–			–			–	
				M5 x 0.8	B5	ZPRS-06-B5						ZPRS-06-B5			ZPRL-06-B5			–	
				M6 x 1	B6	–						ZPRS-06-B6			ZPRL-06-B6			ZPRL-06-B6	
				M8 x 1.25	B8	–						–			ZPRL-06-B8			ZPRL-06-B8	
		Ø 8 08	Male thread	M6 x 1	A6	–						–			ZPRL-08-A6			ZPRL-08-A6	
				M8 x 1	A8	–						–			ZPRL-08-A8			ZPRL-08-A8	
			Female thread	M5 x 0.8	B5	–						–			ZPRL-08-B5			–	
				M6 x 1	B6	–						–			ZPRL-08-B6			ZPRL-08-B6	
				M8 x 1.25	B8	–						–			ZPRL-08-B8			ZPRL-08-B8	
Ⓑ Pad mounting adapter					ZPT1-B5							ZPT2-B5			ZPT3-B8			ZPT4-B8	
Ⓒ Mounting nut (Single unit)				M5 x 0.8	NTJ-015A							NTJ-015A			–			–	
				M6 x 1	ZPNA-M6							ZPNA-M6			ZPNA-M6			ZPNA-M6	
				M8 x 1	–							–			ZPNA-M8			ZPNA-M8	
Ⓓ Gasket (Single unit)					M-5G2							M-5G2			ZP-8G2			ZP-8G2	

Adapter Assembly: With Barb Fitting, Vacuum Inlet Direction Lateral Y Type/ZPY

Product part no.

ZPY ① ② □ - ③ - ④

- ① Pad diameter
- ② Pad form
- □ Pad material
- ③ Vacuum inlet (Barb fitting)
- ④ Connection thread (Male/Female thread)

Component parts

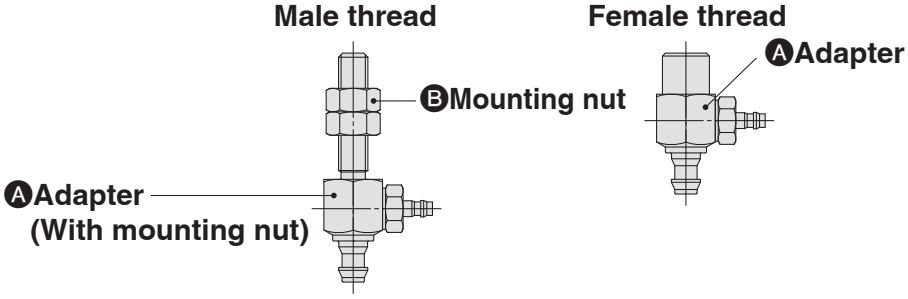

				Symbol	❶ Pad diameter symbol														
					02	04	06	08	10	13	16	10	13	16	20	25	32	40	50
❷ Pad form				Flat type	U	●	●	●	●	–	–	–	●	●	●	●	●	●	●	●
				Flat type with ribs	C	–	–	–	–	–	–	–	●	●	●	●	●	●	●	●
				Bellows type	B	–	–	●	●	–	–	–	●	●	●	●	●	●	●	●
				Thin flat type	UT	–	–	–	–	●	●	●	–	–	–	–	–	–	–	–
				Thin flat type with ribs	CT	–	–	–	–	●	●	●	–	–	–	–	–	–	–	–
				Deep type	D	–	–	–	–	–	–	–	●	–	●	–	●	–	●	–
❸ Vacuum inlet (Barb fitting)	For nylon tubing	Ø 4	N4	❹ Connection thread: Male thread	M5 x 0.8	A5	ZPY1-N4-A5						ZPY2-N4-A5			—			—	
					M6 x 1	A6	ZPY1-N4-A6						ZPY2-N4-A6			ZPY3-N4-A6			—	
					M8 x 1	A8	—						—			ZPY3-N4-A8			—	
				Female thread	M4 x 0.7	B4	ZPY1-N4-B4						—			—			—	
					M5 x 0.8	B5	ZPY1-N4-B5						ZPY2-N4-B5			ZPY3-N4-B5			—	
					M6 x 1	B6	—						ZPY2-N4-B6			ZPY3-N4-B6			—	
					M8 x 1.25	B8	—						—			ZPY3-N4-B8			—	
		Ø 6	N6	Male thread	M5 x 0.8	A5	ZPY1-N6-A5						ZPY2-N6-A5			—			—	
					M6 x 1	A6	ZPY1-N6-A6						ZPY2-N6-A6			ZPY3-N6-A6			ZPY4-N6-A6	
					M8 x 1	A8	—						—			ZPY3-N6-A8			ZPY4-N6-A8	
				Female thread	M4 x 0.7	B4	ZPY1-N6-B4						—			—			—	
					M5 x 0.8	B5	ZPY1-N6-B5						ZPY2-N6-B5			ZPY3-N6-B5			—	
					M6 x 1	B6	—						ZPY2-N6-B6			ZPY3-N6-B6			ZPY4-N6-B6	
					M8 x 1.25	B8	—						—			ZPY3-N6-B8			ZPY4-N6-B8	
	For soft tubing	Ø 4	U4	Male thread	M5 x 0.8	A5	ZPY1-U4-A5						ZPY2-U4-A5			—			—	
					M6 x 1	A6	ZPY1-U4-A6						ZPY2-U4-A6			ZPY3-U4-A6			—	
					M8 x 1	A8	—						—			ZPY3-U4-A8			—	
				Female thread	M4 x 0.7	B4	ZPY1-U4-B4						—			—			—	
					M5 x 0.8	B5	ZPY1-U4-B5						ZPY2-U4-B5			ZPY3-U4-B5			—	
					M6 x 1	B6	—						ZPY2-U4-B6			ZPY3-U4-B6			—	
					M8 x 1.25	B8	—						—			ZPY3-U4-B8			—	
		Ø 6	U6	Male thread	M5 x 0.8	A5	ZPY1-U6-A5						ZPY2-U6-A5			—			—	
					M6 x 1	A6	ZPY1-U6-A6						ZPY2-U6-A6			ZPY3-U6-A6			ZPY4-U6-A6	
					M8 x 1	A8	—						—			ZPY3-U6-A8			ZPY4-U6-A8	
				Female thread	M4 x 0.7	B4	ZPY1-U6-B4						—			—			—	
					M5 x 0.8	B5	ZPY1-U6-B5						ZPY2-U6-B5			ZPY3-U6-B5			—	
					M6 x 1	B6	—						ZPY2-U6-B6			ZPY3-U6-B6			ZPY4-U6-B6	
					M8 x 1.25	B8	—						—			ZPY3-U6-B8			ZPY4-U6-B8	
Ⓑ Mounting nut (Single unit)					M5 x 0.8		NTJ-015A						—			—			—	
					M6 x 1		ZPNA-M6						ZPNA-M6			ZPNA-M6			ZPNA-M6	
					M8 x 1		—						—			ZPNA-M8			ZPNA-M8	

Buffer Assembly: Vacuum Inlet Direction **Vertical** T Type/ZPT

Product part no.

ZPT ① ② □ (J/K) ③ - ④ - ⑤

- ① Pad diameter
- ② Pad form
- □ Pad material
- (J/K) J: Rotating, K: Non-rotating
- ③ Buffer stroke
- ④ Vacuum inlet (Female thread/One-touch fitting/Barb fitting)
- ⑤ Connection thread (Male thread)

Component parts

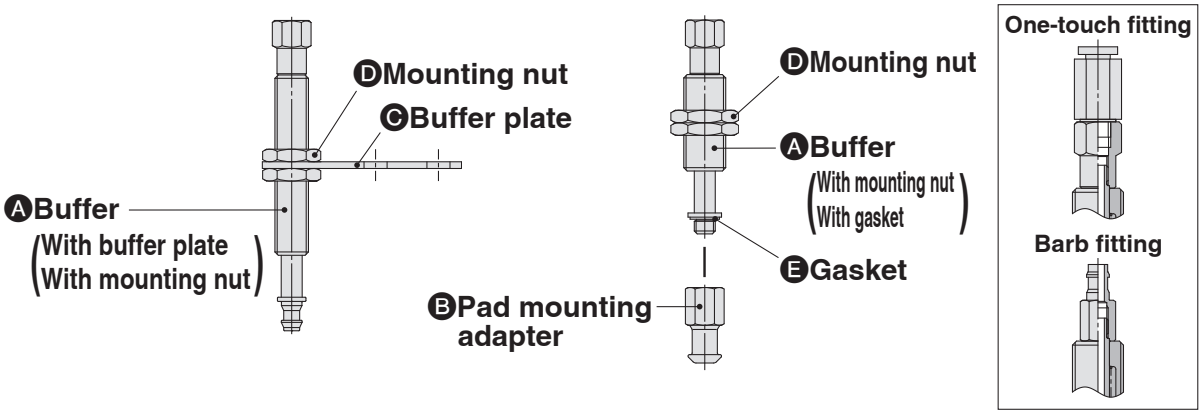

			Symbol	① Pad diameter symbol														
				02	04	06	08	10	13	16	10	13	16	20	25	32	40	50
② Pad form	Flat type		U	●	●	●	●	–	–	–	●	●	●	●	●	●	●	●
	Flat type with ribs		C	–	–	–	–	–	–	–	●	●	●	●	●	●	●	●
	Bellows type		B	–	–	●	●	–	–	–	●	●	●	●	●	●	●	●
	Thin flat type		UT	–	–	–	–	●	●	●	–	–	–	–	–	–	–	–
	Thin flat type with ribs		CT	–	–	–	–	●	●	●	–	–	–	–	–	–	–	–
	Deep type		D	–	–	–	–	–	–	–	●	–	●	–	●	–	●	–
③ Buffer stroke	Stroke		6	●	●	●	●	●	●	●	–	–	–	–	–	–	–	–
			10	●	●	●	●	●	●	●	●	●	●	●	●	●	●	●
			15	●	●	●	●	●	●	●	–	–	–	–	–	–	–	–
			20	–	–	–	–	–	–	–	●	●	●	●	●	●	●	●
			25	●	●	●	●	●	●	●	–	–	–	–	–	–	–	–
			30	–	–	–	–	–	–	–	●	●	●	●	●	●	●	●
			40	–	–	–	–	–	–	–	●	●	●	●	●	●	–	–
			50	–	–	–	–	–	–	–	●	●	●	●	●	●	●	●
⑤ Connection thread	Male thread	M8 x 1	A8	●							–			–			–	
		M10 x 1	A10	–							●			●			–	
		M14 x 1	A14	–							–			–			●	
Ⓐ Buffer ④ Vacuum inlet	Female thread	M3 x 0.5	B3	ZPB1(J/K)③-B3							–			–			–	
		M5 x 0.8	B5	ZPB1(J/K)③-B5							ZPB2(J/K)③-B5			ZPB2(J/K)③-B5			ZPB3(J/K)③-B5	
		Rc1/8	B01	–							–			–			ZPB3(J/K)③-B01	
		NPT1/8	N01	–							–			–			ZPB3(J/K)③-N01	
		NPTF1/8	T01	–							–			–			ZPB3(J/K)③-T01	
	One-touch fitting	Ø 4	04	ZPB1(J/K)③-04							ZPB2(J/K)③-04			ZPB2(J/K)③-04			–	
		Ø 6	06	ZPB1(J/K)③-06							ZPB2(J/K)③-06			ZPB2(J/K)③-06			ZPB3(J/K)③-06	
		Ø 8	08	–							–			–			ZPB3(J/K)③-08	
	Barb fitting	For Ø 4 nylon tubing	N4	ZPB1(J/K)③-N4							–			–			–	
		For Ø 6 nylon tubing	N6	–							ZPB2(J/K)③-N6			ZPB2(J/K)③-N6			ZPB3(J/K)③-N6	
		For Ø 4 soft tubing	U4	ZPB1(J/K)③-U4							–			–			–	
		For Ø 6 soft tubing	U6	–							ZPB2(J/K)③-U6			ZPB2(J/K)③-U6			ZPB3(J/K)③-U6	
Ⓑ Pad mounting adapter				–							ZPT2-B5			ZPT3-B5			ZPT4-B8	
Ⓒ Buffer plate (Single unit)				ZPB1							–			–			–	
Ⓓ Mounting nut (Single unit)				ZPNA-M8							ZPNA-M10			ZPNA-M10			ZPNA-M14	
Ⓔ Gasket (Single unit)				–							M-5G2			M-5G2			ZP-8G2	

[Buffer assembly part number example]

Product part no. **ZPT08UN J 10 – 04 – A8**

Buffer assembly **ZPB1 J 10 – 04**

③ Buffer stroke

■Buffer Assembly: With One-touch Fitting, Vacuum Inlet Direction Lateral R Type/ZPR

Product part no.

ZPR ① ② □ (J/K) ③ - ④ - ⑤

- ① Pad diameter
- ② Pad form
- □ Pad material
- (J/K) J: Rotating, K: Non-rotating
- ③ Buffer stroke
- ④ Vacuum inlet (One-touch fitting)
- ⑤ Connection thread (Male thread)

Component parts

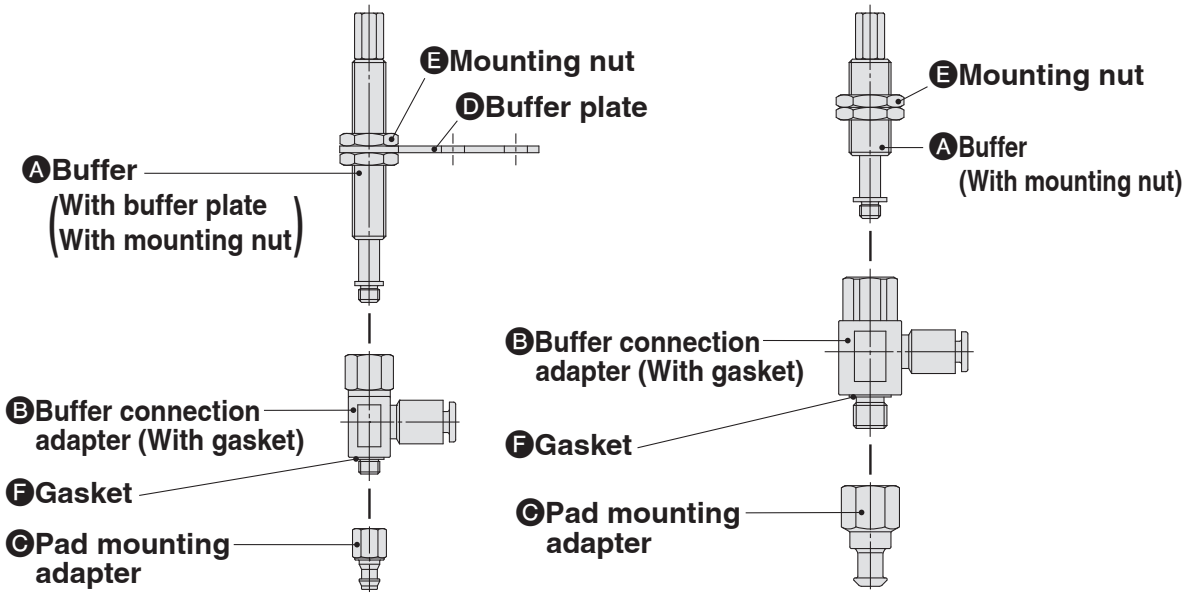

			Symbol	❶ Pad diameter symbol														
				02	04	06	08	10	13	16	10	13	16	20	25	32	40	50
❷ Pad form	Flat type		U	●	●	●	●	–	–	–	●	●	●	●	●	●	●	●
	Flat type with ribs		C	–	–	–	–	–	–	–	●	●	●	●	●	●	●	●
	Bellows type		B	–	–	●	●	–	–	–	●	●	●	●	●	●	●	●
	Thin flat type		UT	–	–	–	–	●	●	●	–	–	–	–	–	–	–	–
	Thin flat type with ribs		CT	–	–	–	–	●	●	●	–	–	–	–	–	–	–	–
	Deep type		D	–	–	–	–	–	–	–	●	–	●	–	●	–	●	–
❸ Buffer stroke	Stroke		6	●	●	●	●	●	●	●	–	–	–	–	–	–	–	–
			10	●	●	●	●	●	●	●	●	●	●	●	●	●	●	●
			15	●	●	●	●	●	●	●	–	–	–	–	–	–	–	–
			20	–	–	–	–	–	–	–	●	●	●	●	●	●	●	●
			25	●	●	●	●	●	●	●	–	–	–	–	–	–	–	–
			30	–	–	–	–	–	–	–	●	●	●	●	●	●	●	●
			40	–	–	–	–	–	–	–	●	●	●	●	●	●	–	–
			50	–	–	–	–	–	–	–	●	●	●	●	●	●	●	●
❺ Connection thread	Male thread	M8 x 1	A8	●							–			–			–	
		M10 x 1	A10	–							●			●			–	
		M14 x 1	A14	–							–			–			●	
Ⓐ Buffer				ZPB1(J/K)③							ZPB2(J/K)③			ZPB2(J/K)③			ZPB3(J/K)③	
Ⓑ Buffer connection adapter	④ Vacuum inlet	One-touch fitting	Ø 4 04	ZPRS-04-B5							ZPRS-04-B5			ZPRL-04-B5			–	
			Ø 6 06	ZPRS-06-B5							ZPRS-06-B5			ZPRL-06-B5			ZPRL-06-B8	
			Ø 8 08	–							–			ZPRL-08-B5			ZPRL-08-B8	
Ⓒ Pad mounting adapter				ZPT1-B5							ZPT2-B5			ZPT3-B8			ZPT4-B8	
Ⓓ Buffer plate (Single unit)				ZPB1							–			–			–	
Ⓔ Mounting nut (Single unit)				ZPNA-M8							ZPNA-M10			ZPNA-M10			ZPNA-M14	
Ⓕ Gasket (Single unit)				M-5G2							M-5G2			ZP-8G2			ZP-8G2	

[Buffer assembly part number example]

Product part no. **ZPR10BN K 20 – 04 – A10**

Buffer assembly **ZPB2 K 20**

③ Buffer stroke

Buffer Assembly: With Barb Fitting, Vacuum Inlet Direction Lateral Y Type/ZPY

Product part no.

ZPY ① ② □ (J/K) ③ - ④ - ⑤

- ① Pad diameter
- ② Pad form
- □ Pad material
- (J/K) J: Rotating, K: Non-rotating
- ③ Buffer stroke
- ④ Vacuum inlet (Barb fitting)
- ⑤ Connection thread (Male thread)

Component parts

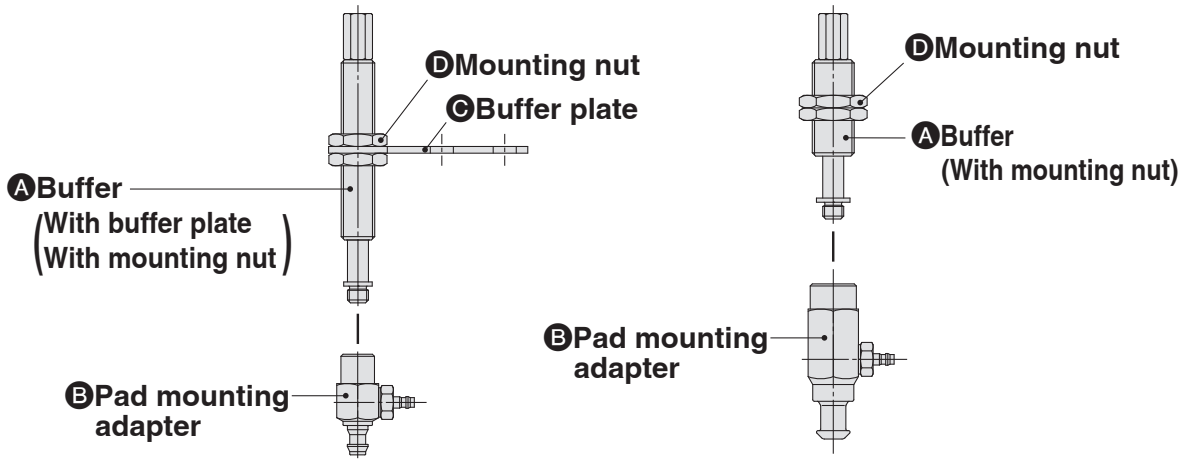

			Symbol	① Pad diameter symbol														
				02	04	06	08	10	13	16	10	13	16	20	25	32	40	50
② Pad form	Flat type		U	●	●	●	●	–	–	–	●	●	●	●	●	●	●	●
	Flat type with ribs		C	–	–	–	–	–	–	–	●	●	●	●	●	●	●	●
	Bellows type		B	–	–	●	●	–	–	–	●	●	●	●	●	●	●	●
	Thin flat type		UT	–	–	–	–	●	●	●	–	–	–	–	–	–	–	–
	Thin flat type with ribs		CT	–	–	–	–	●	●	●	–	–	–	–	–	–	–	–
	Deep type		D	–	–	–	–	–	–	–	●	–	●	–	●	–	●	–
③ Buffer stroke	Stroke		6	●	●	●	●	●	●	●	–	–	–	–	–	–	–	–
			10	●	●	●	●	●	●	●	●	●	●	●	●	●	●	●
			15	●	●	●	●	●	●	●	–	–	–	–	–	–	–	–
			20	–	–	–	–	–	–	–	●	●	●	●	●	●	●	●
			25	●	●	●	●	●	●	●	–	–	–	–	–	–	–	–
			30	–	–	–	–	–	–	–	●	●	●	●	●	●	●	●
			40	–	–	–	–	–	–	–	●	●	●	●	●	●	–	–
			50	–	–	–	–	–	–	–	●	●	●	●	●	●	●	●
⑤ Connection thread	Male thread	M8 x 1	A8	●							–			–			–	
		M10 x 1	A10	–							●			●			–	
		M14 x 1	A14	–							–			–			●	
Ⓐ Buffer				ZPB1(J/K)③							ZPB2(J/K)③			ZPB2(J/K)③			ZPB3(J/K)③	
Ⓑ Pad mounting adapter	④ Vacuum inlet: Barb fitting	For Ø 4 nylon tubing	N4	ZPY1-N4-B5							ZPY2-N4-B5			ZPY3-N4-B5			–	
		For Ø 6 nylon tubing	N6	ZPY1-N6-B5							ZPY2-N6-B5			ZPY3-N6-B5			ZPY4-N6-B8	
		For Ø 4 soft tubing	U4	ZPY1-U4-B5							ZPY2-U4-B5			ZPY3-U4-B5			–	
		For Ø 6 soft tubing	U6	ZPY1-U6-B5							ZPY2-U6-B5			ZPY3-U6-B5			ZPY4-U6-B8	
Ⓒ Buffer plate (Single unit)				ZPB1							–			–			–	
Ⓓ Mounting nut (Single unit)				ZPNA-M8							ZPNA-M10			ZPNA-M10			ZPNA-M14	

[Buffer assembly part number example]

Product part no. **ZPY50CN J 50 – N6 – A14**

Buffer assembly **ZPB3 J 50**

③ Buffer stroke

Mounting Bracket Assembly

■Adapter Assembly: Vacuum Inlet Direction Vertical T Type/ZPT□F

Product part no.

ZPT ① F □ - ② - ③

- ① Pad diameter
- □ Pad material
- ② Vacuum inlet (Female thread)
- ③ Connection thread (Male thread)

Component parts

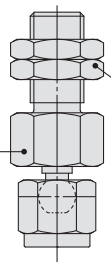

		Symbol			Symbol	① Pad diameter symbol							
						10	13	16	20	25	32	40	50
Ⓐ Adapter ② Vacuum inlet Female thread	M5 x 0.8	B5	③ Connection thread Male thread	M8 x 1	A8	ZPTF1-B5-A8			—			—	
				M10 x 1	A10	—			ZPTF2-B5-A10			—	
				M14 x 1	A14	—			—			ZPTF3-B5-A14	
Ⓑ Mounting nut (Single unit)				M8 x 1		ZPNA-M8			—			—	
				M10 x 1		—			ZPNA-M10			—	
				M14 x 1		—			—			ZPNA-M14	

■Adapter Assembly: Vacuum Inlet Direction Vertical T Type/ZPT□F

Product part no.

ZPT ① F □ - ②

- ① Pad diameter
- □ Pad material
- ② Vacuum inlet (Female thread)

Component parts

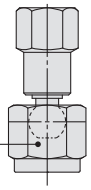

		Symbol	① Pad diameter symbol							
			10	13	16	20	25	32	40	50
Ⓐ Adapter ② Vacuum inlet Female thread	M5 x 0.8	B5	ZPTF1-B5			ZPTF2-B5			—	
	M8 x 1.25	B8	—			ZPTF2-B8			ZPTF3-B8	
	Rc1/8	B01	—			ZPTF2-B01			ZPTF3-B01	
	NPT1/8	N01	—			ZPTF2-N01			ZPTF3-N01	
	NPTF1/8	T01	—			ZPTF2-T01			ZPTF3-T01	

■Adapter Assembly: With One-touch Fitting, Vacuum Inlet Direction Lateral R Type/ZPR□F

Product part no.

ZPR ① F □ - ② - ③

- ① Pad diameter
- □ Pad material
- ② Vacuum inlet (One-touch fitting)
- ③ Connection thread (Female thread)

Component parts

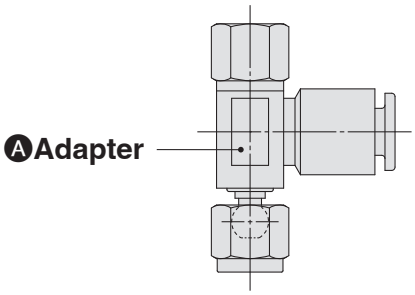

			Symbol				Symbol	❶ Pad diameter symbol							
								10	13	16	20	25	32	40	50
Ⓐ Adapter	❷ Vacuum inlet	One-touch fitting	Ø 4	04	❸ Connection thread	Female thread	M5 x 0.8	B5	ZPRF1-04-B5			—		—	
			Ø 6	06			M5 x 0.8	B5	ZPRF1-06-B5			ZPRF2-06-B5		ZPRF3-06-B5	
							M8 x 1.25	B8	—			ZPRF2-06-B8		ZPRF3-06-B8	
			Ø 8	08			M5 x 0.8	B5	—			ZPRF2-08-B5		ZPRF3-08-B5	
							M8 x 1.25	B8	—			ZPRF2-08-B8		ZPRF3-08-B8	

■Buffer Assembly: Vacuum Inlet Direction Vertical T Type/ZPT□F

Product part no.

ZPT ① F □ (J/K) ② - ③ - ④

- ① Pad diameter
- □ Pad material
- (J/K) J: Rotating, K: Non-rotating
- ② Buffer stroke
- ③ Vacuum inlet (Female thread/One-touch fitting)
- ④ Connection thread (Male thread)

Component parts

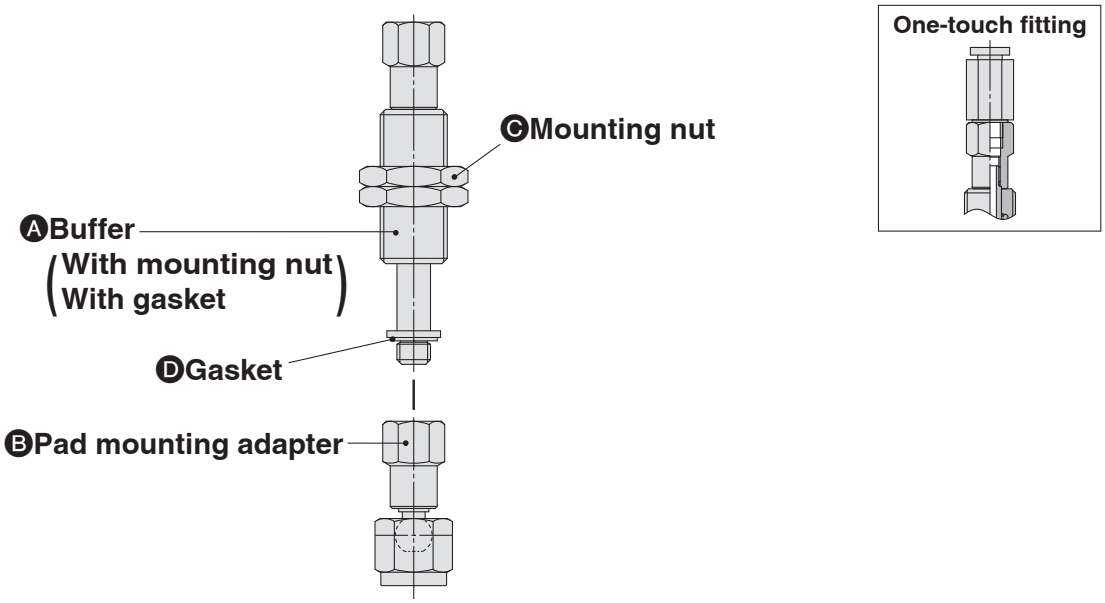

			Symbol	❶ Pad diameter symbol							
				10	13	16	20	25	32	40	50
❷ Buffer stroke	Stroke		10	●	●	●	●	●	●	●	●
			20	●	●	●	●	●	●	●	●
			30	●	●	●	●	●	●	●	●
			40	●	●	●	–	–	–	–	–
			50	●	●	●	●	●	●	●	●
❹ Connection thread	Male thread	M10 x 1	A10	●			–			–	
		M14 x 1	A14	–			●			●	
Ⓐ Buffer	❸ Vacuum inlet: Female thread	M5 x 0.8	B5	ZPB2(J/K)③-B5			–			–	
		Rc1/8	B01	–			ZPB3(J/K)③-B01			ZPB3(J/K)③-B01	
		NPT1/8	N01	–			ZPB3(J/K)③-N01			ZPB3(J/K)③-N01	
		NPTF1/8	T01	–			ZPB3(J/K)③-T01			ZPB3(J/K)③-T01	
	❸ Vacuum inlet: One-touch fitting	Ø 4	04	ZPB2(J/K)③-04			–			–	
		Ø 6	06	ZPB2(J/K)③-06			ZPB3(J/K)③-06			ZPB3(J/K)③-06	
		Ø 8	08	–			ZPB3(J/K)③-08			ZPB3(J/K)③-08	
Ⓑ Pad mounting adapter				ZPTF1-B5			ZPTF2-B8			ZPTF3-B8	
Ⓒ Mounting nut (Single unit)		M10 x 1		ZPNA-M10			–			–	
		M14 x 1		–			ZPNA-M14			ZPNA-M14	
Ⓓ Gasket (Single unit)				M-5G2			ZP-8G2			ZP-8G2	

[Buffer assembly part number example]

Product part no. ZPT20FN J 10 – 06 – A14

Buffer assembly ZPB3 J 10

②Buffer stroke

Buffer Assembly: With One-touch Fitting, Vacuum Inlet Direction Lateral R Type/ZPR□F

Product part no.

ZPR ① F □ (J/K) ② - ③ - ④

- ① Pad diameter
- □ Pad material
- (J/K) J: Rotating, K: Non-rotating
- ② Buffer stroke
- ③ Vacuum inlet (One-touch fitting)
- ④ Connection thread (Male thread)

Component parts

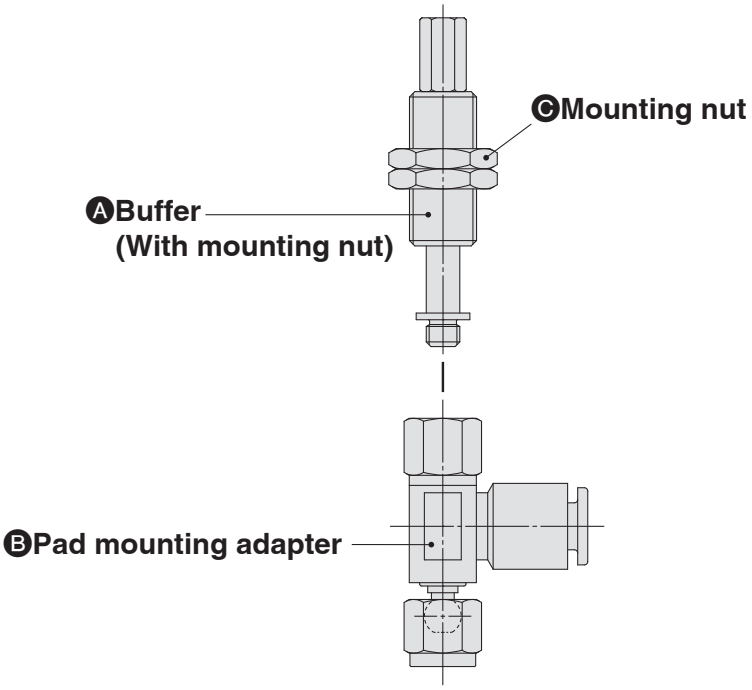

			Symbol	① Pad diameter symbol							
				10	13	16	20	25	32	40	50
② Buffer stroke	Stroke		10	●	●	●	●	●	●	●	●
			20	●	●	●	●	●	●	●	●
			30	●	●	●	●	●	●	●	●
			40	●	●	●	–	–	–	–	–
			50	●	●	●	●	●	●	●	●
④ Connection thread	Male thread	M10 x 1	A10	●			–			–	
		M14 x 1	A14	–			●			●	
Ⓐ Buffer				ZPB2(J/K)②			ZPB3(J/K)②			ZPB3(J/K)②	
Ⓑ Pad mounting adapter	③ Vacuum inlet: One-touch fitting	Ø 4	04	ZPRF1-04-B5			–			–	
		Ø 6	06	ZPRF1-06-B5			ZPRF2-06-B5			ZPRF3-06-B5	
		Ø 8	08	–			ZPRF2-08-B5			ZPRF3-08-B5	
Ⓒ Mounting nut (Single unit)		M10 x 1		ZPNA-M10			–			–	
		M14 x 1		–			ZPNA-M14			ZPNA-M14	

[Buffer assembly part number example]

Product part no. **ZPR10FN K 30 – 06 – A10**

Buffer assembly **ZPB2 K 30**

②Buffer stroke

Basic/Compact Type Specific Product Precautions

Be sure to read this before handling the products.
For safety instructions, refer to the "Handling Precautions for SMC Products" and the "Operation Manual" on the SMC website: https://www.smcworld.com

Mounting

1. Tighten the screw within the specified torque range when mounting the buffer.

Tightening with a torque outside of the specified range may cause malfunction.

Basic Type ZP Series

Product part number	Connection thread	Tightening torque [N·m]
ZP□(2 to 8)□(J/K)□-□-A8	M8 x 1	1.5 to 2.0
ZP□(10 to 32)□(J/K)□-□-A10	M10 x 1	2.5 to 3.5
ZP□(40/50)□(J/K)□-□-A14	M14 x 1	6.5 to 7.5

Compact Type ZP3 Series

Product part number	Connection thread	Tightening torque [N·m]
ZP3□-□(015 to 035)□J□-□	M6 x 0.75	1.5 to 1.8
ZP3□-□(015 to 035)□K□-□	M8 x 0.75	2.0 to 2.5
ZP3□-□(04 to 16)□(J/JB/K)□-□		

2. When mounting the product, tighten with the tightening torque shown in the table below. If excessive or insufficient tightening torque is applied, sealing failure or loose screws may result.

Basic Type ZP Series

Product part number	Connection thread	Tightening torque [N·m]
ZP□T□□-A5	M5 x 0.8	1.3 to 1.7
ZP□T□□-AS5		
ZP□T□□-A6	M6 x 1	1.6 to 2
ZP□T□□-AS6		
ZP□T□□-AG01	G1/8	3 to 5
ZP□T□□-AG02	G1/4	8 to 12

Compact Type ZP3 Series

Product part number	Connection thread	Tightening torque [N·m]
ZP3□-T(015 to 035)U□-A3	M3 x 0.5	0.2 to 0.25
ZP3□-T(04 to 16)□□-A5	M5 x 0.8	1.3 to 1.7

Product part number	Connection thread	Tightening torque [N·m]
ZP□T□□-BG01	G1/8	3 to 5
ZP□T□□-BG02	G1/4	8 to 12

How to Replace the Pad

1. How to replace the pad of the basic type ZP series

1 Pull the lock ring upward, and, after lifting it up to the adapter, remove the old pad by pulling it downward.

2 While holding the lock ring in the raised position, place a new pad onto the adapter.

3 Confirm that the pad is securely in place, and then return the lock ring to its original position.

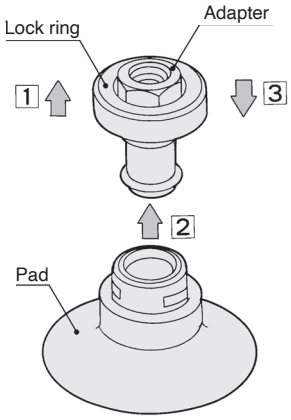

2. How to replace the pad of the basic (ball joint) type ZP series

Pad diameter: Ø 10 to Ø 32

1 Insert a hexagon wrench into the bottom of the pad, loosen the screw, and remove the old pad from the adapter.

2 Place a new pad on the adapter, and, after confirming that the O-ring is in place, retighten the screw with the hexagon wrench.

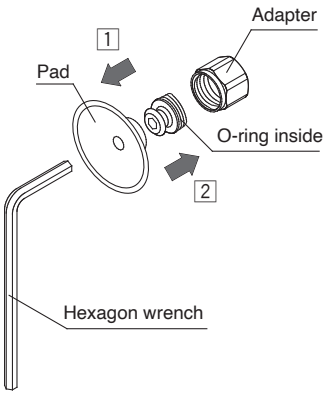

Pad diameter: Ø 40, Ø 50

1 Pull the lock ring upward, and, after lifting it up to the adapter, remove the old pad by pulling it downward.

2 While holding the lock ring in the raised position, place a new pad onto the adapter.

3 Confirm that the pad is securely in place, and then return the lock ring to its original position.

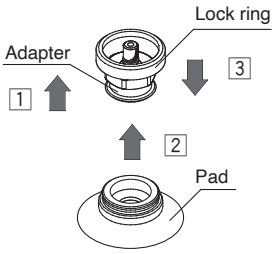

Mounting Bracket Assembly

■Adapter Assembly: Vacuum Inlet Direction **Vertical** T Type/ZPT

Product part no.

ZPT ① ② □ - ③

- ① Pad diameter
- ② Pad form
- □ Pad material
- ③ Vacuum inlet (Male/Female thread)

Component parts

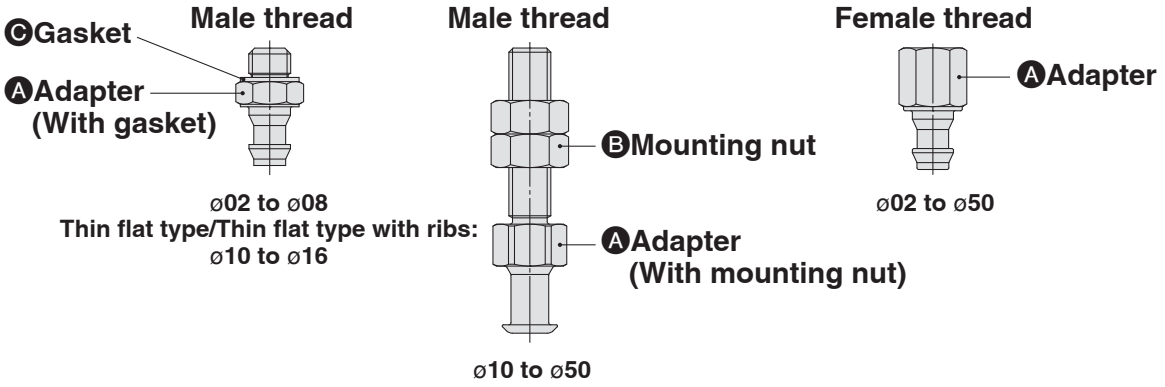

		Symbol	❶ Pad diameter symbol														
			02	04	06	08	10	13	16	10	13	16	20	25	32	40	50
❷ Pad form	Flat type	U	●	●	●	●	–	–	–	●	●	●	●	●	●	●	●
	Flat type with ribs	C	–	–	–	–	–	–	–	●	●	●	●	●	●	●	●
	Bellows type	B	–	–	●	●	–	–	–	●	●	●	●	●	●	●	●
	Thin flat type	UT	–	–	–	–	●	●	●	–	–	–	–	–	–	–	–
	Thin flat type with ribs	CT	–	–	–	–	●	●	●	–	–	–	–	–	–	–	–
	Deep type	D	–	–	–	–	–	–	–	●	–	●	–	●	–	●	–
Ⓐ Adapter ❸ Vacuum inlet, Male thread	M5 x 0.8	A5	ZPT1-A5							ZPT2-A5			–			–	
	M6 x 1	A6	ZPT1-A6							ZPT2-A6			ZPT3-A6			ZPT4-A6	
	M8 x 1	A8	–							–			ZPT3-A8			ZPT4-A8	
Ⓐ Adapter ❸ Vacuum inlet, Female thread	M4 x 0.7	B4	ZPT1-B4							–			–			–	
	M5 x 0.8	B5	ZPT1-B5							ZPT2-B5			ZPT3-B5			–	
	M6 x 1	B6	–							ZPT2-B6			ZPT3-B6			ZPT4-B6	
	M8 x 1.25	B8	–							–			ZPT3-B8			ZPT4-B8	
	Rc1/8	B01	–							ZPT2-B01			ZPT3-B01			ZPT4-B01	
	NPT1/8	N01	–							ZPT2-N01			ZPT3-N01			ZPT4-N01	
	NPTF1/8	T01	–							ZPT2-T01			ZPT3-T01			ZPT4-T01	
Ⓑ Mounting nut (Single unit)	M5 x 0.8		–							NTJ-015A			–			–	
	M6 x 1		–							ZPNA-M6			ZPNA-M6			ZPNA-M6	
	M8 x 1		–							–			ZPNA-M8			ZPNA-M8	
Ⓒ Gasket (Single unit)	For M5 x 0.8		M-5G2							–			–			–	
	For M6 x 1		M-6G							–			–			–	

Adapter Assembly: With One-touch Fitting, Vacuum Inlet Direction Lateral R Type/ZPR

Product part no.

ZPR ① ② □ - ③ - ④

- ① Pad diameter
- ② Pad form
- □ Pad material
- ③ Vacuum inlet (One-touch fitting)
- ④ Connection thread (Male/Female thread)

Component parts

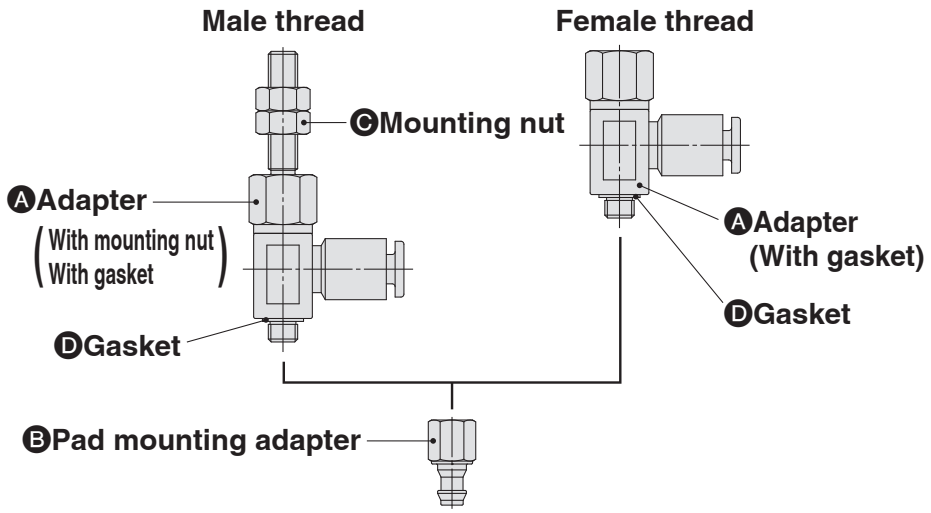

				Symbol	① Pad diameter symbol														
					02	04	06	08	10	13	16	10	13	16	20	25	32	40	50
② Pad form			Flat type	U	●	●	●	●	–	–	–	●	●	●	●	●	●	●	●
			Flat type with ribs	C	–	–	–	–	–	–	–	●	●	●	●	●	●	●	●
			Bellows type	B	–	–	●	●	–	–	–	●	●	●	●	●	●	●	●
			Thin flat type	UT	–	–	–	–	●	●	●	–	–	–	–	–	–	–	–
			Thin flat type with ribs	CT	–	–	–	–	●	●	●	–	–	–	–	–	–	–	–
			Deep type	D	–	–	–	–	–	–	–	●	–	●	–	●	–	●	–
Ⓐ Adapter	③ Vacuum inlet (One-touch fitting)	ø4 04	④ Connection thread: Male thread	M5 x 0.8	A5	ZPRS-04-A5						ZPRS-04-A5			–			–	
				M6 x 1	A6	ZPRS-04-A6						ZPRS-04-A6			ZPRL-04-A6			–	
				M8 x 1	A8	–						–			ZPRL-04-A8			–	
			Female thread	M4 x 0.7	B4	ZPRS-04-B4						–			–			–	
				M5 x 0.8	B5	ZPRS-04-B5						ZPRS-04-B5			ZPRL-04-B5			–	
				M6 x 1	B6	–						ZPRS-04-B6			ZPRL-04-B6			–	
				M8 x 1.25	B8	–						–			ZPRL-04-B8			–	
		ø6 06	Male thread	M5 x 0.8	A5	ZPRS-06-A5						ZPRS-06-A5			–			–	
				M6 x 1	A6	ZPRS-06-A6						ZPRS-06-A6			ZPRL-06-A6			ZPRL-06-A6	
				M8 x 1	A8	–						–			ZPRL-06-A8			ZPRL-06-A8	
			Female thread	M4 x 0.7	B4	ZPRS-06-B4						–			–			–	
				M5 x 0.8	B5	ZPRS-06-B5						ZPRS-06-B5			ZPRL-06-B5			–	
				M6 x 1	B6	–						ZPRS-06-B6			ZPRL-06-B6			ZPRL-06-B6	
				M8 x 1.25	B8	–						–			ZPRL-06-B8			ZPRL-06-B8	
		ø8 08	Male thread	M6 x 1	A6	–						–			ZPRL-08-A6			ZPRL-08-A6	
				M8 x 1	A8	–						–			ZPRL-08-A8			ZPRL-08-A8	
			Female thread	M5 x 0.8	B5	–						–			ZPRL-08-B5			–	
				M6 x 1	B6	–						–			ZPRL-08-B6			ZPRL-08-B6	
				M8 x 1.25	B8	–						–			ZPRL-08-B8			ZPRL-08-B8	
Ⓑ Pad mounting adapter					ZPT1-B5							ZPT2-B5			ZPT3-B8			ZPT4-B8	
Ⓒ Mounting nut (Single unit)				M5 x 0.8	NTJ-015A							NTJ-015A			–			–	
				M6 x 1	ZPNA-M6							ZPNA-M6			ZPNA-M6			ZPNA-M6	
				M8 x 1	–							–			ZPNA-M8			ZPNA-M8	
Ⓓ Gasket (Single unit)					M-5G2							M-5G2			ZP-8G2			ZP-8G2	

Adapter Assembly: With Barb Fitting, Vacuum Inlet Direction Lateral Y Type/ZPY

Product part no.

ZPY ① ② □ - ③ - ④

- ① Pad diameter
- ② Pad form
- □ Pad material
- ③ Vacuum inlet (Barb fitting)
- ④ Connection thread (Male/Female thread)

Component parts

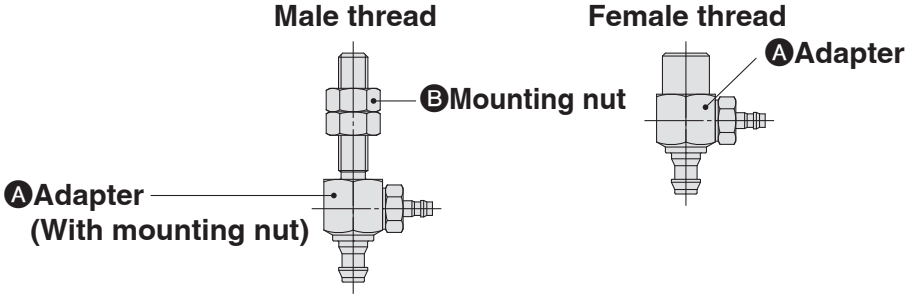

					Symbol	❶ Pad diameter symbol														
						02	04	06	08	10	13	16	10	13	16	20	25	32	40	50
❷ Pad form					Flat type	U	●	●	●	●	–	–	–	●	●	●	●	●	●	●	●
					Flat type with ribs	C	–	–	–	–	–	–	–	●	●	●	●	●	●	●	●
					Bellows type	B	–	–	●	●	–	–	–	●	●	●	●	●	●	●	●
					Thin flat type	UT	–	–	–	–	●	●	●	–	–	–	–	–	–	–	–
					Thin flat type with ribs	CT	–	–	–	–	●	●	●	–	–	–	–	–	–	–	–
					Deep type	D	–	–	–	–	–	–	–	●	–	●	–	●	–	●	–
Ⓐ Adapter	❸ Vacuum inlet (Barb fitting)	For nylon tubing	ø4	N4	❹ Connection thread: Male thread	M5 x 0.8	A5	ZPY1-N4-A5					ZPY2-N4-A5			–			–	
						M6 x 1	A6	ZPY1-N4-A6					ZPY2-N4-A6			ZPY3-N4-A6			–	
						M8 x 1	A8	–					–			ZPY3-N4-A8			–	
					Female thread	M4 x 0.7	B4	ZPY1-N4-B4					–			–			–	
						M5 x 0.8	B5	ZPY1-N4-B5					ZPY2-N4-B5			ZPY3-N4-B5			–	
						M6 x 1	B6	–					ZPY2-N4-B6			ZPY3-N4-B6			–	
						M8 x 1.25	B8	–					–			ZPY3-N4-B8			–	
			ø6	N6	Male thread	M5 x 0.8	A5	ZPY1-N6-A5					ZPY2-N6-A5			–			–	
						M6 x 1	A6	ZPY1-N6-A6					ZPY2-N6-A6			ZPY3-N6-A6			ZPY4-N6-A6	
						M8 x 1	A8	–					–			ZPY3-N6-A8			ZPY4-N6-A8	
					Female thread	M4 x 0.7	B4	ZPY1-N6-B4					–			–			–	
						M5 x 0.8	B5	ZPY1-N6-B5					ZPY2-N6-B5			ZPY3-N6-B5			–	
						M6 x 1	B6	–					ZPY2-N6-B6			ZPY3-N6-B6			ZPY4-N6-B6	
						M8 x 1.25	B8	–					–			ZPY3-N6-B8			ZPY4-N6-B8	
		For soft tubing	ø4	U4	Male thread	M5 x 0.8	A5	ZPY1-U4-A5					ZPY2-U4-A5			–			–	
						M6 x 1	A6	ZPY1-U4-A6					ZPY2-U4-A6			ZPY3-U4-A6			–	
						M8 x 1	A8	–					–			ZPY3-U4-A8			–	
					Female thread	M4 x 0.7	B4	ZPY1-U4-B4					–			–			–	
						M5 x 0.8	B5	ZPY1-U4-B5					ZPY2-U4-B5			ZPY3-U4-B5			–	
						M6 x 1	B6	–					ZPY2-U4-B6			ZPY3-U4-B6			–	
						M8 x 1.25	B8	–					–			ZPY3-U4-B8			–	
			ø6	U6	Male thread	M5 x 0.8	A5	ZPY1-U6-A5					ZPY2-U6-A5			–			–	
						M6 x 1	A6	ZPY1-U6-A6					ZPY2-U6-A6			ZPY3-U6-A6			ZPY4-U6-A6	
						M8 x 1	A8	–					–			ZPY3-U6-A8			ZPY4-U6-A8	
					Female thread	M4 x 0.7	B4	ZPY1-U6-B4					–			–			–	
						M5 x 0.8	B5	ZPY1-U6-B5					ZPY2-U6-B5			ZPY3-U6-B5			–	
						M6 x 1	B6	–					ZPY2-U6-B6			ZPY3-U6-B6			ZPY4-U6-B6	
						M8 x 1.25	B8	–					–			ZPY3-U6-B8			ZPY4-U6-B8	
Ⓑ Mounting nut (Single unit)						M5 x 0.8		NTJ-015A					–			–			–	
						M6 x 1		ZPNA-M6					ZPNA-M6			ZPNA-M6			ZPNA-M6	
						M8 x 1		–					–			ZPNA-M8			ZPNA-M8	

Buffer Assembly: Vacuum Inlet Direction Vertical T Type/ZPT

Product part no.

ZPT ① ② □ (J/K) ③ - ④ - ⑤

- ① Pad diameter
- ② Pad form
- □ Pad material
- (J/K) J: Rotating, K: Non-rotating
- ③ Buffer stroke
- ④ Vacuum inlet (Female thread/One-touch fitting/Barb fitting)
- ⑤ Connection thread (Male thread)

Component parts

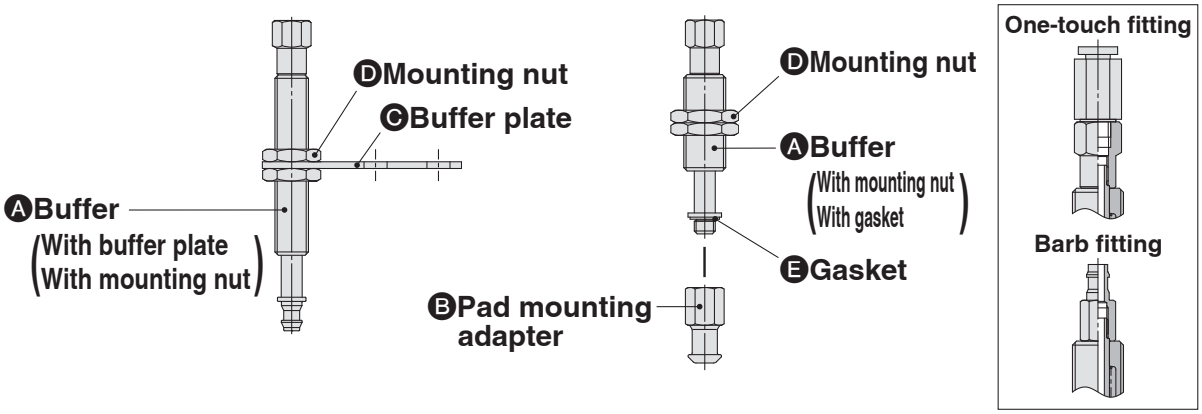

			Symbol	① Pad diameter symbol														
				02	04	06	08	10	13	16	10	13	16	20	25	32	40	50
② Pad form	Flat type		U	●	●	●	●	–	–	–	●	●	●	●	●	●	●	●
	Flat type with ribs		C	–	–	–	–	–	–	–	●	●	●	●	●	●	●	●
	Bellows type		B	–	–	●	●	–	–	–	●	●	●	●	●	●	●	●
	Thin flat type		UT	–	–	–	–	●	●	●	–	–	–	–	–	–	–	–
	Thin flat type with ribs		CT	–	–	–	–	●	●	●	–	–	–	–	–	–	–	–
	Deep type		D	–	–	–	–	–	–	–	●	–	●	–	●	–	●	–
③ Buffer stroke	Stroke		6	●	●	●	●	●	●	●	–	–	–	–	–	–	–	–
			10	●	●	●	●	●	●	●	●	●	●	●	●	●	●	●
			15	●	●	●	●	●	●	●	–	–	–	–	–	–	–	–
			20	–	–	–	–	–	–	–	●	●	●	●	●	●	●	●
			25	●	●	●	●	●	●	●	–	–	–	–	–	–	–	–
			30	–	–	–	–	–	–	–	●	●	●	●	●	●	●	●
			40	–	–	–	–	–	–	–	●	●	●	●	●	●	–	–
			50	–	–	–	–	–	–	–	●	●	●	●	●	●	●	●
⑤ Connection thread	Male thread	M8 x 1	A8	●							–			–			–	
		M10 x 1	A10	–							●			●			–	
		M14 x 1	A14	–							–			–			●	
Ⓐ Buffer ④ Vacuum inlet	Female thread	M3 x 0.5	B3	ZPB1(J/K)③-B3							–			–			–	
		M5 x 0.8	B5	ZPB1(J/K)③-B5							ZPB2(J/K)③-B5			ZPB2(J/K)③-B5			ZPB3(J/K)③-B5	
		Rc1/8	B01	–							–			–			ZPB3(J/K)③-B01	
		NPT1/8	N01	–							–			–			ZPB3(J/K)③-N01	
		NPTF1/8	T01	–							–			–			ZPB3(J/K)③-T01	
	One-touch fitting	ø4	04	ZPB1(J/K)③-04							ZPB2(J/K)③-04			ZPB2(J/K)③-04			–	
		ø6	06	ZPB1(J/K)③-06							ZPB2(J/K)③-06			ZPB2(J/K)③-06			ZPB3(J/K)③-06	
		ø8	08	–							–			–			ZPB3(J/K)③-08	
	Barb fitting	For ø4 nylon tubing	N4	ZPB1(J/K)③-N4							–			–			–	
		For ø6 nylon tubing	N6	–							ZPB2(J/K)③-N6			ZPB2(J/K)③-N6			ZPB3(J/K)③-N6	
		For ø4 soft tubing	U4	ZPB1(J/K)③-U4							–			–			–	
		For ø6 soft tubing	U6	–							ZPB2(J/K)③-U6			ZPB2(J/K)③-U6			ZPB3(J/K)③-U6	
Ⓑ Pad mounting adapter				–							ZPT2-B5			ZPT3-B5			ZPT4-B8	
Ⓒ Buffer plate (Single unit)				ZPB1							–			–			–	
Ⓓ Mounting nut (Single unit)				ZPNA-M8							ZPNA-M10			ZPNA-M10			ZPNA-M14	
Ⓔ Gasket (Single unit)				–							M-5G2			M-5G2			ZP-8G2	

[Buffer assembly part number example]

Product part no. **ZPT08UN J 10 – 04 – A8**

Buffer assembly **ZPB1 J 10 – 04**

③ Buffer stroke

■Buffer Assembly: With One-touch Fitting, Vacuum Inlet Direction Lateral R Type/ZPR

Product part no.

ZPR ① ② □ (J/K) ③ - ④ - ⑤

- ① Pad diameter
- ② Pad form
- □ Pad material
- (J/K) J: Rotating, K: Non-rotating
- ③ Buffer stroke
- ④ Vacuum inlet (One-touch fitting)
- ⑤ Connection thread (Male thread)

Component parts

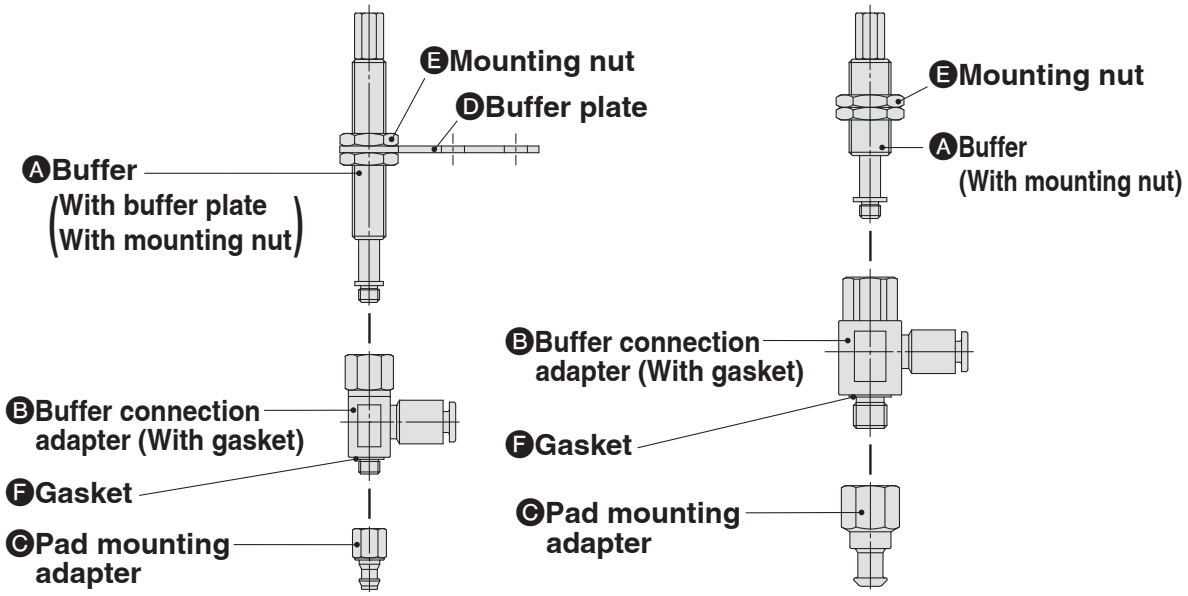

			Symbol	① Pad diameter symbol														
				02	04	06	08	10	13	16	10	13	16	20	25	32	40	50
② Pad form	Flat type		U	●	●	●	●	–	–	–	●	●	●	●	●	●	●	●
	Flat type with ribs		C	–	–	–	–	–	–	–	●	●	●	●	●	●	●	●
	Bellows type		B	–	–	●	●	–	–	–	●	●	●	●	●	●	●	●
	Thin flat type		UT	–	–	–	–	●	●	●	–	–	–	–	–	–	–	–
	Thin flat type with ribs		CT	–	–	–	–	●	●	●	–	–	–	–	–	–	–	–
	Deep type		D	–	–	–	–	–	–	–	●	–	●	–	●	–	●	–
③ Buffer stroke	Stroke		6	●	●	●	●	●	●	●	–	–	–	–	–	–	–	–
			10	●	●	●	●	●	●	●	●	●	●	●	●	●	●	●
			15	●	●	●	●	●	●	●	–	–	–	–	–	–	–	–
			20	–	–	–	–	–	–	–	●	●	●	●	●	●	●	●
			25	●	●	●	●	●	●	●	–	–	–	–	–	–	–	–
			30	–	–	–	–	–	–	–	●	●	●	●	●	●	●	●
			40	–	–	–	–	–	–	–	●	●	●	●	●	●	–	–
			50	–	–	–	–	–	–	–	●	●	●	●	●	●	●	●
⑤ Connection thread	Male thread	M8 x 1	A8	●							–			–			–	
		M10 x 1	A10	–							●			●			–	
		M14 x 1	A14	–							–			–			●	
Ⓐ Buffer				ZPB1(J/K)③							ZPB2(J/K)③			ZPB2(J/K)③			ZPB3(J/K)③	
Ⓑ Buffer connection adapter	④ Vacuum inlet	One-touch fitting	ø4	04	ZPRS-04-B5						ZPRS-04-B5			ZPRL-04-B5			–	
			ø6	06	ZPRS-06-B5						ZPRS-06-B5			ZPRL-06-B5			ZPRL-06-B8	
			ø8	08	–						–			ZPRL-08-B5			ZPRL-08-B8	
Ⓒ Pad mounting adapter					ZPT1-B5						ZPT2-B5			ZPT3-B8			ZPT4-B8	
Ⓓ Buffer plate (Single unit)					ZPB1						–			–			–	
Ⓔ Mounting nut (Single unit)					ZPNA-M8						ZPNA-M10			ZPNA-M10			ZPNA-M14	
Ⓕ Gasket (Single unit)					M-5G2						M-5G2			ZP-8G2			ZP-8G2	

[Buffer assembly part number example]

Product part no. **ZPR10BN K 20 – 04 – A10**

Buffer assembly **ZPB2 K 20**

③ Buffer stroke

Buffer Assembly: With Barb Fitting, Vacuum Inlet Direction Lateral Y Type/ZPY

Product part no.

ZPY ① ② □ (J/K) ③ - ④ - ⑤

- ① Pad diameter
- ② Pad form
- □ Pad material
- (J/K) J: Rotating, K: Non-rotating
- ③ Buffer stroke
- ④ Vacuum inlet (Barb fitting)
- ⑤ Connection thread (Male thread)

Component parts

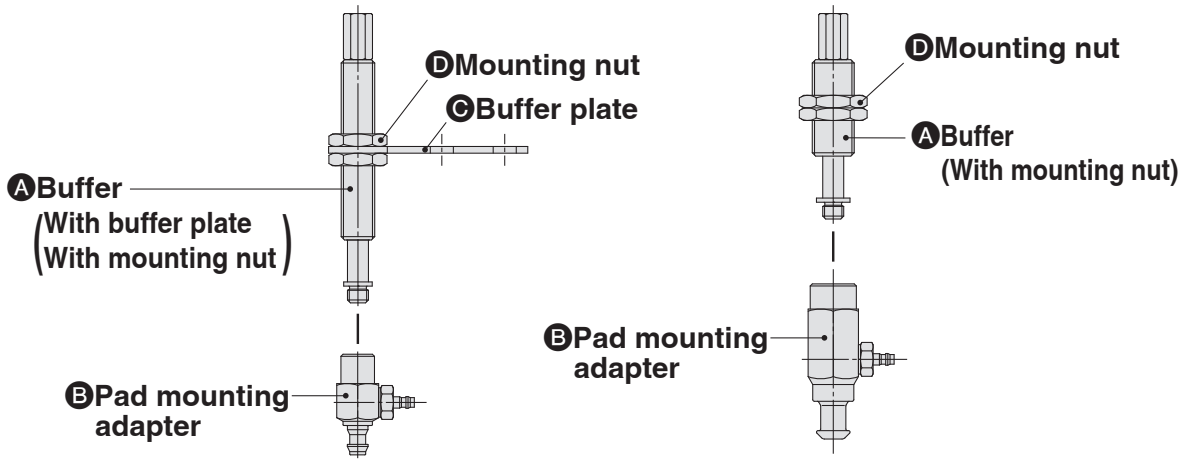

		Symbol	① Pad diameter symbol														
			02	04	06	08	10	13	16	10	13	16	20	25	32	40	50
② Pad form	Flat type	U	●	●	●	●	–	–	–	●	●	●	●	●	●	●	●
	Flat type with ribs	C	–	–	–	–	–	–	–	●	●	●	●	●	●	●	●
	Bellows type	B	–	–	●	●	–	–	–	●	●	●	●	●	●	●	●
	Thin flat type	UT	–	–	–	–	●	●	●	–	–	–	–	–	–	–	–
	Thin flat type with ribs	CT	–	–	–	–	●	●	●	–	–	–	–	–	–	–	–
	Deep type	D	–	–	–	–	–	–	–	●	–	●	–	●	–	●	–
③ Buffer stroke	Stroke	6	●	●	●	●	●	●	●	–	–	–	–	–	–	–	–
		10	●	●	●	●	●	●	●	●	●	●	●	●	●	●	●
		15	●	●	●	●	●	●	●	–	–	–	–	–	–	–	–
		20	–	–	–	–	–	–	–	●	●	●	●	●	●	●	●
		25	●	●	●	●	●	●	●	–	–	–	–	–	–	–	–
		30	–	–	–	–	–	–	–	●	●	●	●	●	●	●	●
		40	–	–	–	–	–	–	–	●	●	●	●	●	●	–	–
		50	–	–	–	–	–	–	–	●	●	●	●	●	●	●	●
⑤ Connection thread	Male thread M8 x 1	A8	●							–			–			–	
	Male thread M10 x 1	A10	–							●			●			–	
	Male thread M14 x 1	A14	–							–			–			●	
Ⓐ Buffer			ZPB1(J/K)③							ZPB2(J/K)③			ZPB2(J/K)③			ZPB3(J/K)③	
Ⓑ Pad mounting adapter, ④ Vacuum inlet, Barb fitting	For ø4 nylon tubing	N4	ZPY1-N4-B5							ZPY2-N4-B5			ZPY3-N4-B5			—	
	For ø6 nylon tubing	N6	ZPY1-N6-B5							ZPY2-N6-B5			ZPY3-N6-B5			ZPY4-N6-B8	
	For ø4 soft tubing	U4	ZPY1-U4-B5							ZPY2-U4-B5			ZPY3-U4-B5			—	
	For ø6 soft tubing	U6	ZPY1-U6-B5							ZPY2-U6-B5			ZPY3-U6-B5			ZPY4-U6-B8	
Ⓒ Buffer plate (Single unit)			ZPB1							—			—			—	
Ⓓ Mounting nut (Single unit)			ZPNA-M8							ZPNA-M10			ZPNA-M10			ZPNA-M14	

[Buffer assembly part number example]

Product part no. **ZPY50CN J 50 – N6 – A14**

Buffer assembly **ZPB3 J 50**

③ Buffer stroke

Mounting Bracket Assembly

■Adapter Assembly: Vacuum Inlet Direction Vertical T Type/ZPT□F

Product part no.

ZPT ① F □ - ② - ③

- ① Pad diameter
- □ Pad material
- ② Vacuum inlet (Female thread)
- ③ Connection thread (Male thread)

Component parts

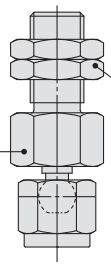

		Symbol			Symbol	① Pad diameter symbol							
						10	13	16	20	25	32	40	50
Ⓐ Adapter ② Vacuum inlet Female thread	M5 x 0.8	B5	③ Connection thread Male thread	M8 x 1	A8	ZPTF1-B5-A8			—			—	
				M10 x 1	A10	—			ZPTF2-B5-A10			—	
				M14 x 1	A14	—			—			ZPTF3-B5-A14	
Ⓑ Mounting nut (Single unit)				M8 x 1		ZPNA-M8			—			—	
				M10 x 1		—			ZPNA-M10			—	
				M14 x 1		—			—			ZPNA-M14	

■Adapter Assembly: Vacuum Inlet Direction Vertical T Type/ZPT□F

Product part no.

ZPT ① F □ - ②

- ① Pad diameter
- □ Pad material
- ② Vacuum inlet (Female thread)

Component parts

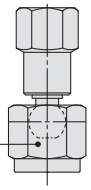

		Symbol	① Pad diameter symbol							
			10	13	16	20	25	32	40	50
Ⓐ Adapter ② Vacuum inlet Female thread	M5 x 0.8	B5	ZPTF1-B5			ZPTF2-B5			—	
	M8 x 1.25	B8	—			ZPTF2-B8			ZPTF3-B8	
	Rc1/8	B01	—			ZPTF2-B01			ZPTF3-B01	
	NPT1/8	N01	—			ZPTF2-N01			ZPTF3-N01	
	NPTF1/8	T01	—			ZPTF2-T01			ZPTF3-T01	

■Adapter Assembly: With One-touch Fitting, Vacuum Inlet Direction Lateral R Type/ZPR□F

Product part no.

ZPR ① F □ - ② - ③

- ① Pad diameter
- □ Pad material
- ② Vacuum inlet (One-touch fitting)
- ③ Connection thread (Female thread)

Component parts

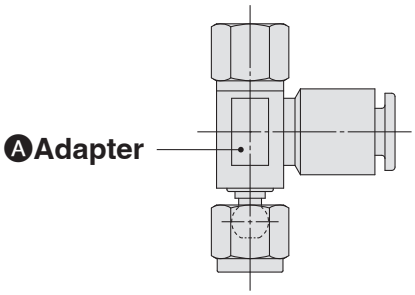

Ⓐ Adapter	② Vacuum inlet		Symbol	③ Connection thread		Symbol	① Pad diameter symbol							
							10	13	16	20	25	32	40	50
	One-touch fitting	ø4	04	Female thread	M5 x 0.8	B5	ZPRF1-04-B5			—			—	
		ø6	06		M5 x 0.8	B5	ZPRF1-06-B5			ZPRF2-06-B5			ZPRF3-06-B5	
					M8 x 1.25	B8	—			ZPRF2-06-B8			ZPRF3-06-B8	
		ø8	08		M5 x 0.8	B5	—			ZPRF2-08-B5			ZPRF3-08-B5	
					M8 x 1.25	B8	—			ZPRF2-08-B8			ZPRF3-08-B8	

■Buffer Assembly: Vacuum Inlet Direction Vertical T Type/ZPT□F

Product part no.

ZPT ① F □ (J/K) ② - ③ - ④

- ① Pad diameter
- □ Pad material
- (J/K) J: Rotating, K: Non-rotating
- ② Buffer stroke
- ③ Vacuum inlet (Female thread/One-touch fitting)
- ④ Connection thread (Male thread)

Component parts

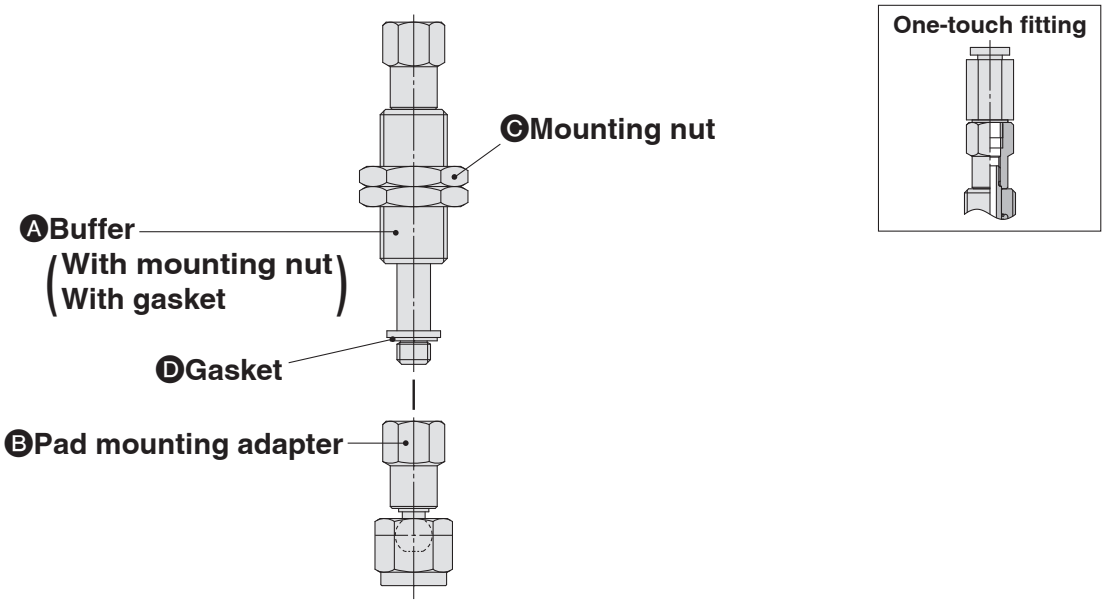

			Symbol	❶ Pad diameter symbol							
				10	13	16	20	25	32	40	50
❷ Buffer stroke	Stroke		10	●	●	●	●	●	●	●	●
			20	●	●	●	●	●	●	●	●
			30	●	●	●	●	●	●	●	●
			40	●	●	●	–	–	–	–	–
			50	●	●	●	●	●	●	●	●
❹ Connection thread	Male thread	M10 x 1	A10	●			–			–	
		M14 x 1	A14	–			●			●	
Ⓐ Buffer	❸ Vacuum inlet: Female thread	M5 x 0.8	B5	ZPB2(J/K)③-B5			–			–	
		Rc1/8	B01	–			ZPB3(J/K)③-B01			ZPB3(J/K)③-B01	
		NPT1/8	N01	–			ZPB3(J/K)③-N01			ZPB3(J/K)③-N01	
		NPTF1/8	T01	–			ZPB3(J/K)③-T01			ZPB3(J/K)③-T01	
	❸ Vacuum inlet: One-touch fitting	ø4	04	ZPB2(J/K)③-04			–			–	
		ø6	06	ZPB2(J/K)③-06			ZPB3(J/K)③-06			ZPB3(J/K)③-06	
		ø8	08	–			ZPB3(J/K)③-08			ZPB3(J/K)③-08	
Ⓑ Pad mounting adapter				ZPTF1-B5			ZPTF2-B8			ZPTF3-B8	
Ⓒ Mounting nut (Single unit)		M10 x 1		ZPNA-M10			–			–	
		M14 x 1		–			ZPNA-M14			ZPNA-M14	
Ⓓ Gasket (Single unit)				M-5G2			ZP-8G2			ZP-8G2	

[Buffer assembly part number example]

Product part no. **ZPT20FN J 10 – 06 – A14**

Buffer assembly **ZPB3 J 10**

② Buffer stroke

Buffer Assembly: With One-touch Fitting, Vacuum Inlet Direction Lateral R Type/ZPR□F

Product part no.

ZPR ① F □ (J/K) ② - ③ - ④

- ① Pad diameter
- □ Pad material
- (J/K) J: Rotating, K: Non-rotating
- ② Buffer stroke
- ③ Vacuum inlet (One-touch fitting)
- ④ Connection thread (Male thread)

Component parts

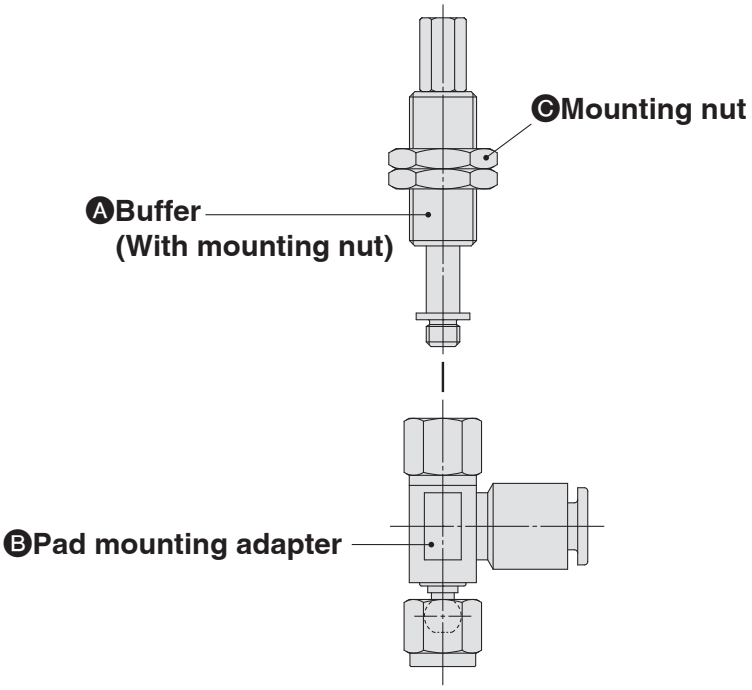

			Symbol	① Pad diameter symbol							
				10	13	16	20	25	32	40	50
② Buffer stroke	Stroke		10	●	●	●	●	●	●	●	●
			20	●	●	●	●	●	●	●	●
			30	●	●	●	●	●	●	●	●
			40	●	●	●	–	–	–	–	–
			50	●	●	●	●	●	●	●	●
④ Connection thread	Male thread	M10 x 1	A10	●			–			–	
		M14 x 1	A14	–			●			●	
Ⓐ Buffer				ZPB2(J/K)②			ZPB3(J/K)②			ZPB3(J/K)②	
Ⓑ Pad mounting adapter	③ Vacuum inlet: One-touch fitting	ø4	04	ZPRF1-04-B5			–			–	
		ø6	06	ZPRF1-06-B5			ZPRF2-06-B5			ZPRF3-06-B5	
		ø8	08	–			ZPRF2-08-B5			ZPRF3-08-B5	
Ⓒ Mounting nut (Single unit)		M10 x 1		ZPNA-M10			–			–	
		M14 x 1		–			ZPNA-M14			ZPNA-M14	

[Buffer assembly part number example]

Product part no. **ZPR10FN K 30 – 06 – A10**

Buffer assembly **ZPB2 K 30**

② Buffer stroke

⚠ Safety Instructions

These safety instructions are intended to prevent hazardous situations and/or equipment damage. These instructions indicate the level of potential hazard with the labels of **"Caution," "Warning"** or **"Danger."** They are all important notes for safety and must be followed in addition to International Standards (ISO/IEC) [1], and other safety regulations.

⚠ **Danger:**	**Danger** indicates a hazard with a high level of risk which, if not avoided, will result in death or serious injury.
⚠ **Warning:**	**Warning** indicates a hazard with a medium level of risk which, if not avoided, could result in death or serious injury.
⚠ **Caution:**	**Caution** indicates a hazard with a low level of risk which, if not avoided, could result in minor or moderate injury.

1) ISO 4414: Pneumatic fluid power – General rules and safety requirements for systems and their components.
ISO 4413: Hydraulic fluid power – General rules and safety requirements for systems and their components.
IEC 60204-1: Safety of machinery – Electrical equipment of machines. (Part 1: General requirements)
ISO 10218-1: Robots and robotic devices - Safety requirements for industrial robots - Part 1: Robots.
etc.

⚠ Warning

1. **The compatibility of the product is the responsibility of the person who designs the equipment or decides its specifications.**
   Since the product specified here is used under various operating conditions, its compatibility with specific equipment must be decided by the person who designs the equipment or decides its specifications based on necessary analysis and test results. The expected performance and safety assurance of the equipment will be the responsibility of the person who has determined its compatibility with the product. This person should also continuously review all specifications of the product referring to its latest catalogue information, with a view to giving due consideration to any possibility of equipment failure when configuring the equipment.
2. **Only personnel with appropriate training should operate machinery and equipment.**
   The product specified here may become unsafe if handled incorrectly. The assembly, operation and maintenance of machines or equipment including our products must be performed by an operator who is appropriately trained and experienced.
3. **Do not service or attempt to remove product and machinery/ equipment until safety is confirmed.**
   1. The inspection and maintenance of machinery/equipment should only be performed after measures to prevent falling or runaway of the driven objects have been confirmed.
   2. When the product is to be removed, confirm that the safety measures as mentioned above are implemented and the power from any appropriate source is cut, and read and understand the specific product precautions of all relevant products carefully.
   3. Before machinery/equipment is restarted, take measures to prevent unexpected operation and malfunction.
4. **SMC products cannot be used beyond their specifications.**
   They are not developed, designed, and manufactured to be used under the following conditions or environments.
   Use under such conditions or environments is not allowed.
   1. Conditions and environments outside of the given specifications, or use outdoors or in a place exposed to direct sunlight.
   2. Use for nuclear power, railways, aviation, space equipment, ships, vehicles, military application, equipment affecting human life, body, and property, combustion equipment, entertainment equipment, emergency shut-off circuits, press clutches, brake circuits, safety equipment, etc., and use for applications that do not conform to standard specifications such as catalogues and operation manuals.
   3. Use for interlock circuits, except for use with double interlock such as installing a mechanical protection function in case of failure. Please periodically inspect the product to confirm that the product is operating properly.

⚠ Caution

SMC develops, designs, and manufactures products to be used for automatic control equipment, and provides them for peaceful use in manufacturing industries.
Use in non-manufacturing industries is not allowed.
Products SMC manufactures and sells cannot be used for the purpose of transactions or certification specified in the Measurement Act of each country.
The new Measurement Act prohibits use of any unit other than SI units in Japan.

Limited warranty and Disclaimer/Compliance Requirements

The product used is subject to the following "Limited warranty and Disclaimer" and "Compliance Requirements".Read and accept them before using the product.

Limited warranty and Disclaimer

1. The warranty period of the product is 1 year in service or 1.5 years after the product is delivered, whichever is first. [2] Also, the product may have specified durability, running distance or replacement parts. Please consult your nearest sales branch.
2. For any failure or damage reported within the warranty period which is clearly our responsibility, a replacement product or necessary parts will be provided. This limited warranty applies only to our product independently, and not to any other damage incurred due to the failure of the product.
3. Prior to using SMC products, please read and understand the warranty terms and disclaimers noted in the specified catalogue for the particular products.

2) **Suction cups (Vacuum pads) are excluded from this 1 year warranty.**
A suction cup (vacuum pad) is a consumable part, so it is warranted for a year after it is delivered. Also, even within the warranty period, the wear of a product due to the use of the suction cup (vacuum pad) or failure due to the deterioration of rubber material are not allowed by the limited warranty.

Compliance Requirements

1. The use of SMC products with production equipment for the manufacture of weapons of mass destruction (WMD) or any other weapon is strictly prohibited.
2. The exports of SMC products or technology from one country to another are governed by the relevant security laws and regulations of the countries involved in the transaction. Prior to the shipment of a SMC product to another country, assure that all local rules governing that export are known and followed.

⚠ **Safety Instructions**	Be sure to read the "Handling Precautions for SMC Products" (M-E03-3) and "Operation Manual" before use.

SMC Corporation (Europe)

Austria	+43 (0)2262622800	www.smc.at	office.at@smc.com
Belgium	+32 (0)33551464	www.smc.be	info@smc.be
Bulgaria	+359 (0)2807670	www.smc.bg	sales.bg@smc.com
Croatia	+385 (0)13707288	www.smc.hr	sales.hr@smc.com
Czech Republic	+420 541424611	www.smc.cz	office.at@smc.com
Denmark	+45 70252900	www.smcdk.com	smc.dk@smc.com
Estonia	+372 651 0370	www.smcee.ee	info.ee@smc.com
Finland	+358 207513513	www.smc.fi	smc.fi@smc.com
France	+33 (0)164761000	www.smc-france.fr	supportclient.fr@smc.com
Germany	+49 (0)61034020	www.smc.de	info.de@smc.com
Greece	+30 210 2717265	www.smchellas.gr	sales@smchellas.gr
Hungary	+36 23513000	www.smc.hu	office.hu@smc.com
Ireland	+353 (0)14039000	www.smcautomation.ie	technical.ie@smc.com
Italy	+39 03990691	www.smcitalia.it	mailbox.it@smc.com
Latvia	+371 67817700	www.smc.lv	info.lv@smc.com
Lithuania	+370 5 2308118	www.smclt.lt	info.lt@smc.com
Netherlands	+31 (0)205318888	www.smc.nl	info@smc.nl
Norway	+47 67129020	www.smc-norge.no	post.no@smc.com
Poland	+48 22 344 40 00	www.smc.pl	office.pl@smc.com
Portugal	+351 214724500	www.smc.eu	apoiocliente.pt@smc.com
Romania	+40 213205111	www.smcromania.ro	office.ro@smc.com
Russia	+7 (812)3036600	www.smc.eu	sales@smcru.com
Slovakia	+421 (0)413213212	www.smc.sk	sales.sk@smc.com
Slovenia	+386 (0)73885412	www.smc.si	office.si@smc.com
Spain	+34 945184100	www.smc.eu	post.es@smc.com
Sweden	+46 (0)86031240	www.smc.nu	order.se@smc.com
Switzerland	+41 (0)523963131	www.smc.ch	helpcenter.ch@smc.com
Turkey	+90 212 489 0 440	www.smcturkey.com.tr	satis.tr@smc.com
UK	+44 (0)845 121 5122	www.smc.uk	sales.gb@smc.com
South Africa	+27 10 900 1233	www.smcza.co.za	Sales.za@smc.com

Printing EP 00 Printed in Spain

Specifications are subject to change without prior notice and any obligation on the part of the manufacturer