5 Port Air Operated Valve
VZA2000 Series

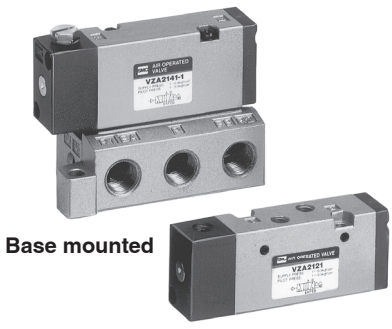

Base mounted

Body ported

Specifications

Fluid	Air	
Operating pressure range (MPa)	VZA2121, 2141	0.1 to 1.0
	VZA2$\frac{2}{4}$21, 2$\frac{2}{4}$41	0 to 1.0
Pilot pressure range (MPa)	0.1 to 1.0	
Ambient and fluid temperature (°C)	–10 to 60 (No freezing)	
Impact/Vibration resistance (m/s²) Note)	150/50	

Operating pressure ≤ Pilot pressure

Note) Impact resistance: No malfunction from test using drop impact tester, to axis and right angle directions of main valve, each one time when pilot signal ON and OFF. (Value in the initial stage)

Vibration resistance: No malfunction from test with 8.3 to 2000 Hz 1 sweep, to axis and right angle directions of main valve, each one time when pilot signal ON and OFF. (Value in the initial stage)

Model

Valve model		Type of actuation		Port size	Flow rate characteristics								Pilot port size	Pilot port piping location
					1→4/2(P→A/B)				4/2→5/3(A/B→EA/EB)					
					C [dm³/(s·bar)]	b	Cv	Q [l/min (ANR)]*1	C [dm³/(s·bar)]	b	Cv	Q [l/min (ANR)]*1		
Body ported	**VZA2121-M5**	2 position	Single	M5 x 0.8	0.60	0.43	0.15	167	0.59	0.30	0.15	150	M5 x 0.8	Body side
	VZA2221-M5		Double		0.60	0.43	0.15	167	0.59	0.30	0.15	150		
	VZA2321-M5	3 position	Closed center		0.56	0.15	0.13	131	0.59	0.22	0.14	143		
	VZA2421-M5		Exhaust center		0.60	0.20	0.15	144	0.59	0.22	0.14	143		
Base mounted (With sub-plate)	**VZA2141-1-01**	2 position	Single	Rc 1/8	1.0	0.30	0.25	254	0.90	0.25	0.21	222	M5 x 0.8	Sub-plate side
	VZA2141-2-01													Body side
	VZA2241-1-01		Double		1.0	0.30	0.25	254	0.90	0.25	0.21	222		Sub-plate side
	VZA2241-2-01													Body side
	VZA2341-1-01	3 position	Closed center		0.90	0.25	0.21	222	0.71	0.30	0.19	181		Sub-plate side
	VZA2341-2-01													Body side
	VZA2441-1-01		Exhaust center		1.0	0.30	0.25	254	0.90	0.25	0.21	222		Sub-plate side
	VZA2441-2-01													Body side

Note) Model number for base mounted type without sub-plate is VZA2□41-$\frac{1}{2}$.

Compatibility with universal porting is possible except for with the single type.

*1) These values have been calculated according to ISO 6358 and indicate the flow rate under standard conditions with an inlet pressure of 0.6 MPa (relative pressure) and a pressure drop of 0.1 MPa.

Symbol

Body ported

2 position single

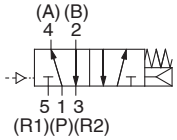

2 position double

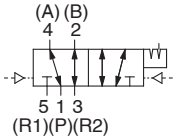

3 position closed center

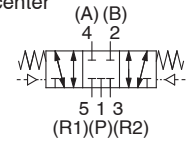

3 position exhaust center

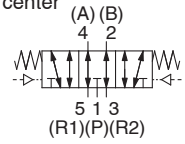

Base mounted

2 position single

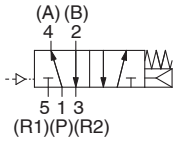

2 position double

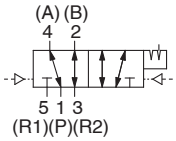

3 position closed center

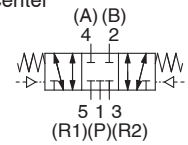

3 position exhaust center

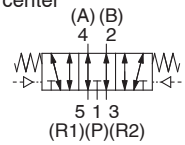

* To order valves and blanking plate assembly mounted onto the manifold, list valves and blank plate assembly with manifold base part number.

<Example: Body ported>	<Example: Base mounted>
VV5ZA2-20-051·····1 pc.	**VV5ZA2-50-051-01**····· 1 pc.
VZA2121-M5·····1 pc.	VZA2141-2·····1 pc.
VZA2221-M5·····3 pcs.	VZA2241-2·····3 pcs.
VVZ2000-31A-2····· 1 pc.	VVZ2000-31A-3·····1 pc.

Sub-plate Assembly Part No.: VZA2000-S-01 □

* Mounting bolt and gasket are not included.

Thread type

—	Rc
N	NPT
T	NPTF
F	G

How to Order Manifold

VV5ZA2 – 50 – 05 1 – 01 □

VZA2000 Series Manifold

Manifold specifications (P, EA, EB port size)

Symbol	Piping type	P, EA, EB port size
20	Body ported	Rc1/8
50	Base mounted	

Stations

02	2 Stations
⋮	⋮
10	10 Stations

Combination symbol (port specifications)

1	P, EA, EB common/side ported

Cylinder port size on the base

—	Body ported 20 type
M5	M5 x 0.8
01	Rc1/8
C4	Built-in Ø 4 One-touch fitting
C6	Built-in Ø 6 One-touch fitting

Thread type

—	Rc
N	NPT
T	NPTF
F	G

How to Order Valve

VZA2 1 4 1 – 2 – □ □ – □

Type of actuation

1	2 position single
2	2 position double
3	3 position closed center
4	3 position exhaust center

Body type

2	Body ported
4	Base mounted

Pilot port piping type

Symbol	Body ported	Base mounted
—	Body side	—
1	—	Sub-plate side (Not available for manifolds)
2	—	Body side

Port size

Symbol	Body ported	Base mounted
—	—	Without sub-plate
M5	M5 x 0.8	—
01	—	1/8

Thread type

—	Rc, M5
N	NPT
T	NPTF
F	G

Option

F	With foot bracket

Note) Only VZA2121-M5(single) applicable.

With Bracket

VZA2000	Air operated valve model	VZA2121-M5-F
	Bracket assembly part no.	VZ2000-37A-2

Dimensions: Body Ported

2 position single: VZA2121-M5

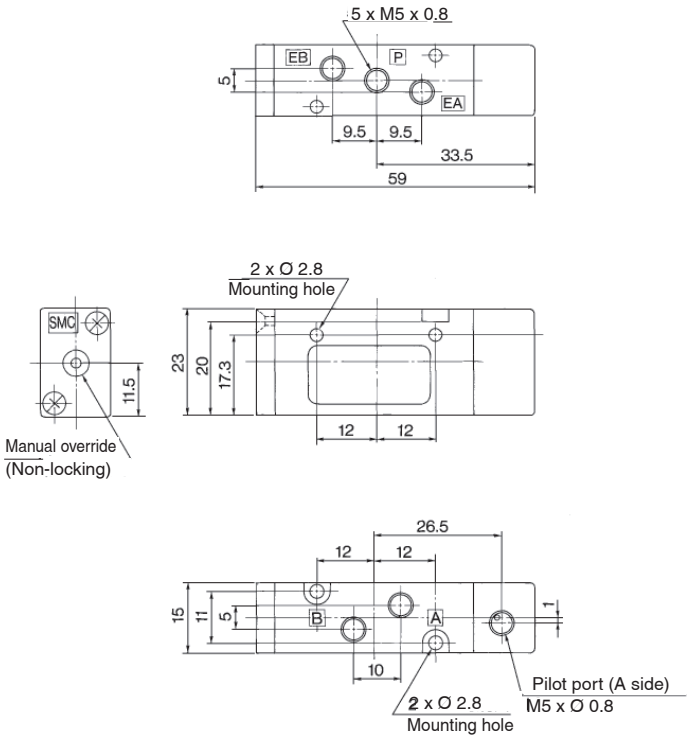

2 position double: VZA2221-M5

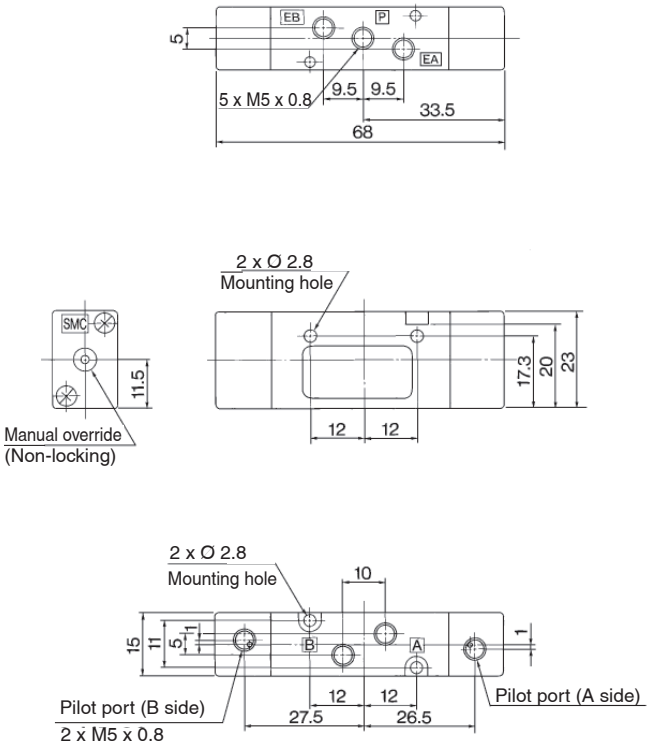

3 position closed center: VZA2321-M5
3 position exhaust center: VZA2421-M5

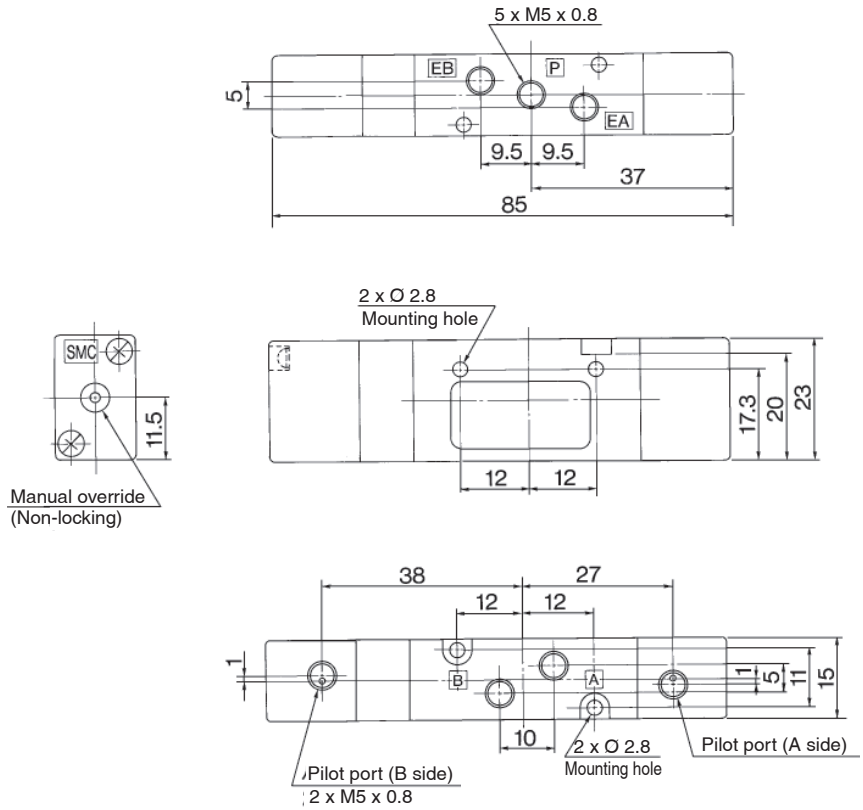

Dimensions: Base Mounted

2 position single: VZA2141-$\frac{1}{2}$-01

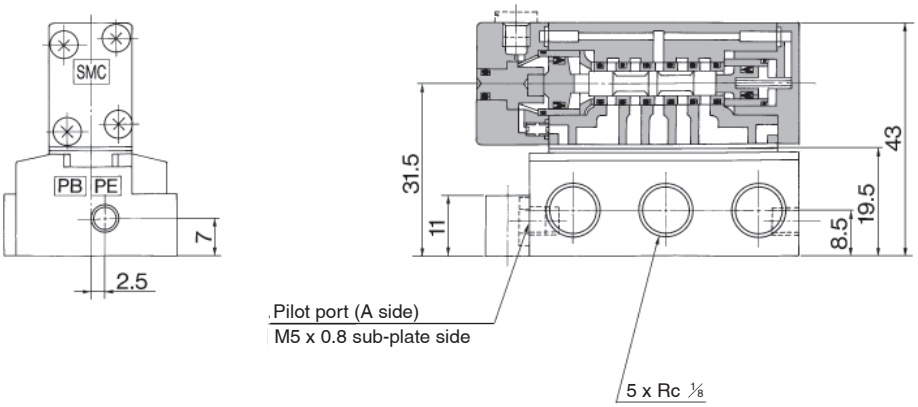

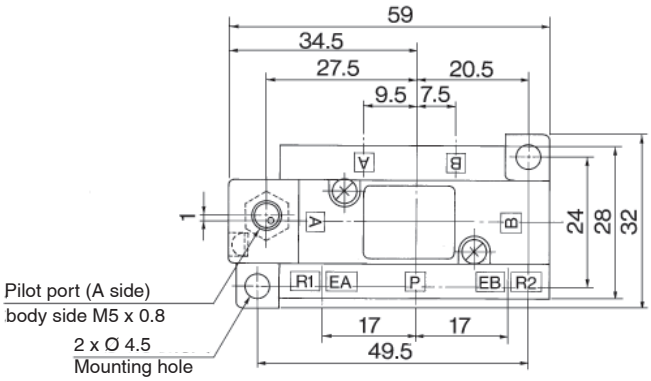

2 position double: VZA2241-$\frac{1}{2}$-01

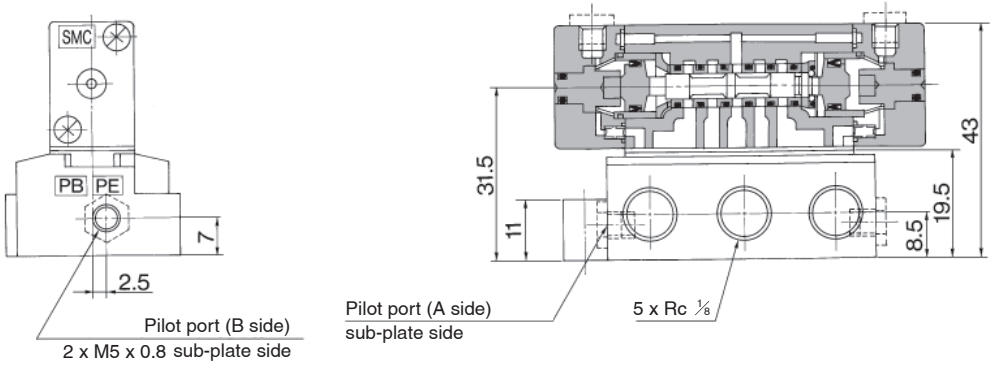

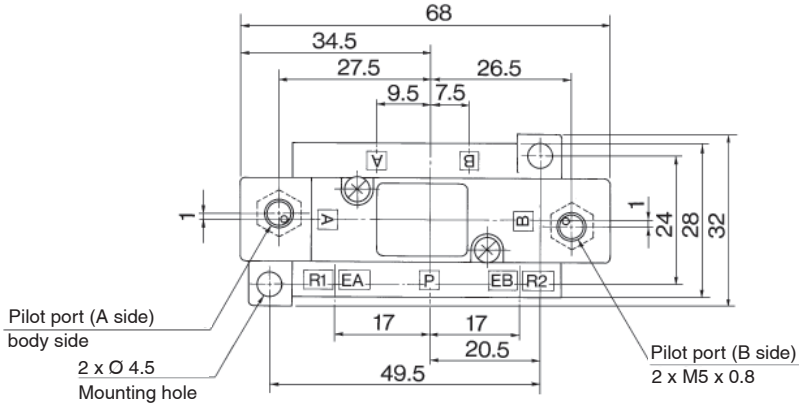

Dimensions: Base Mounted

3 position closed center: VZA2341-$\frac{1}{2}$-01

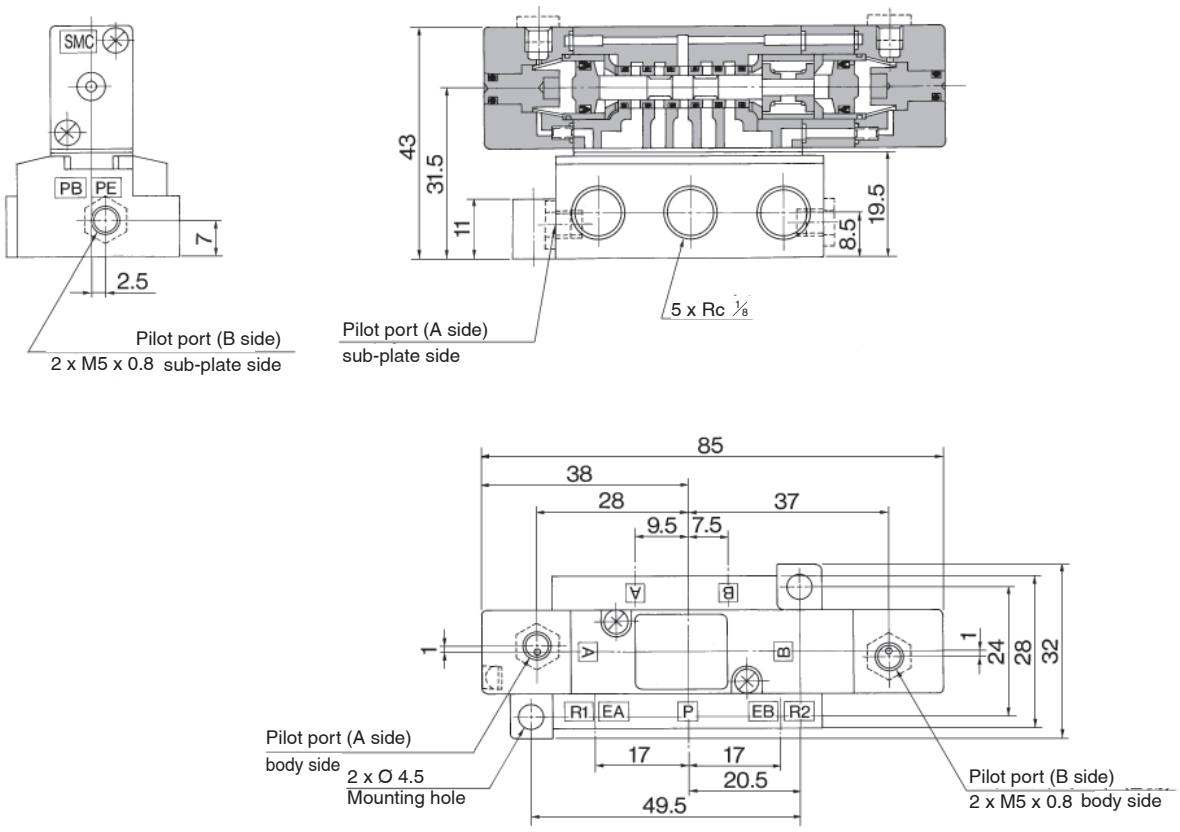

3 position exhaust center: VZA2441-$\frac{1}{2}$-01

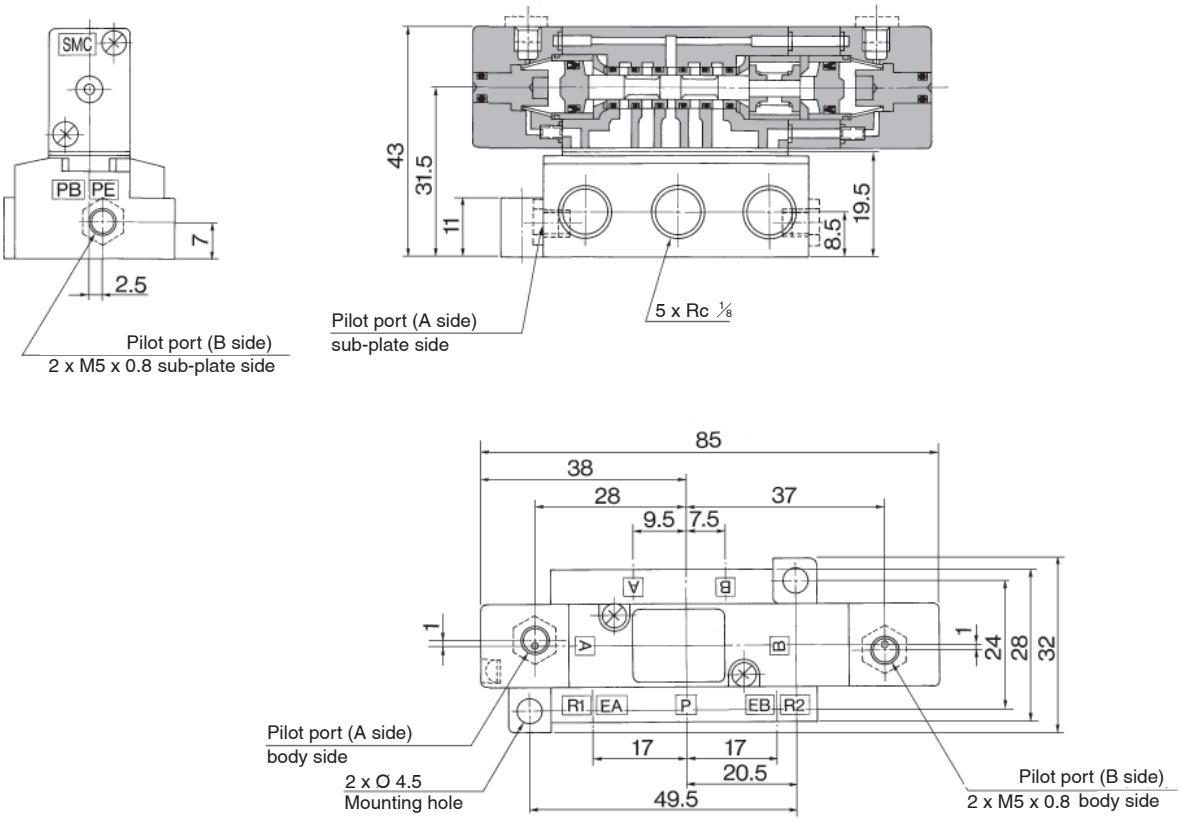

5 Port Air Operated Valve
VZA4000 Series

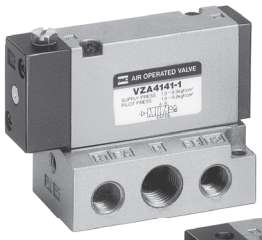

Base mounted



Body ported

Specifications

Fluid	Air	
Operating pressure range (MPa)	VZA4121, 4141	0.15 to 1.0
	VZA4$\frac{3}{3}$21, 4$\frac{3}{4}$41	0 to 1.0
Pilot pressure range (MPa)	VZA4121, 4141	0.15 to 1.0
	VZA4$\frac{2}{3}$21, 4$\frac{2}{4}$41	0.1 to 1.0
Ambient and fluid temperature (°C)	–10 to 60 °C (No freezing.)	
Impact/Vibration resistance (m/s²) Note)	150/50	

Operating pressure ≤ Pilot pressure

Note) Impact resistance: No malfunction from test using drop impact tester, to axis and right angle directions of main valve, each one time when pilot signal ON and OFF. (Value in the initial stage)

Vibration resistance: No malfunction from test with 8.3 to 2000 Hz 1 sweep, to axis and right angle directions of main valve, each one time when pilot signal ON and OFF. (Value in the initial stage)

Model

Valve model		Type of actuation		Port size Rc	Flow rate characteristics (2)								Pilot port size	Pilot port piping location
					1→4/2(P→A/B)				4/2→5/3(A/B→EA/EB)					
					C [dm³/(s·bar)]	b	Cv	Q [l/min (ANR)]*1	C [dm³/(s·bar)]	b	Cv	Q [l/min (ANR)]*1		
Body ported	VZA4121-01	2 position	Single	1/8	2.0	0.14	0.49	464	1.7	0.25	0.44	419	M5 x 0.8	Body side
	VZA4221-01		Double		2.0	0.14	0.49	464	1.7	0.25	0.44	419		
	VZA4321-01	3 position	Closed center		1.9	0.15	0.47	443	1.7	0.25	0.44	419		
	VZA4421-01		Exhaust center		1.9	0.15	0.47	443	1.7	0.25	0.44	419		
Base mounted (With sub-plate)	VZA4141-1-01	2 position	Single	1/8	2.4	0.23	0.56	585	2.2	0.19	0.54	524	M5 x 0.8	Sub-plate side
	VZA4141-1-02			1/4										
	VZA4141-2-01			1/8	2.4	0.23	0.56	585	2.2	0.19	0.54	524		Body side
	VZA4141-2-02			1/4										
	VZA4241-1-01		Double	1/8	2.4	0.23	0.56	585	2.2	0.19	0.54	524		Sub-plate side
	VZA4241-1-02			1/4										
	VZA4241-2-01			1/8	2.4	0.23	0.56	585	2.2	0.19	0.54	524		Body side
	VZA4241-2-02			1/4										
	VZA4341-1-01	3 position	Closed center	1/8	2.3	0.19	0.54	548	2.3	0.21	0.54	554		Sub-plate side
	VZA4341-1-02			1/4										
	VZA4341-2-01			1/8	2.3	0.19	0.54	548	2.3	0.21	0.54	554		Body side
	VZA4341-2-02			1/4										
	VZA4441-1-01		Exhaust center	1/8	2.3	0.21	0.52	554	2.2	0.22	0.52	533		Sub-plate side
	VZA4441-1-02			1/4										
	VZA4441-2-01			1/8	2.3	0.21	0.52	554	2.2	0.22	0.52	533		Body side
	VZA4441-2-02			1/4										

Compatibility with universal porting is possible except for with the single type.

Note 1) Model number for base mounted type without sub-plate is VZA4□41-$\frac{1}{2}$.

Note 2) Value at the maximum port size

*1) These values have been calculated according to ISO 6358 and indicate the flow rate under standard conditions with an inlet pressure of 0.6 MPa (relative pressure) and a pressure drop of 0.1 MPa.

Symbol

Body ported

2 position single

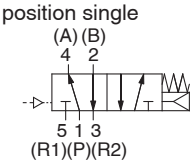

2 position double

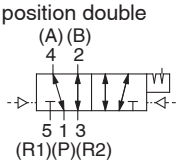

3 position closed center

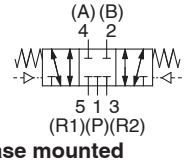

3 position exhaust center

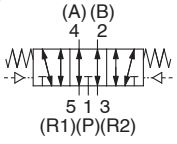

Base mounted

2 position single

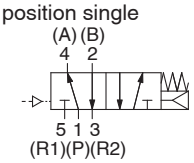

2 position double

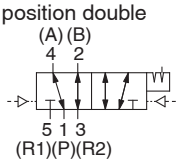

3 position closed center

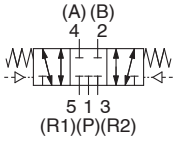

3 position exhaust center

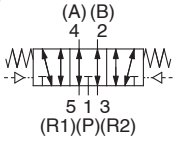

* To order valves and blanking plate assembly mounted onto the manifold, list valves and blanking plate assembly with manifold base part number.

<Example: Body ported>	<Example: Base mounted>
VV5ZA4-20-081····· 1 pc.	**VV5ZA4-50-081-02**····· 1 pc.
VZA4121-01·····4 pcs.	VZA4141-2·····4 pcs.
VZA4221-01·····3 pcs.	VZA4241-2·····3 pcs.
VVZ4000-31A-1····· 1 pc.	VVZ4000-31A-2·····1 pc.

Sub-plate Assembly Part No.: VZA4000-S-$\frac{01}{02}$□

* Mounting bolt and gasket are not included.

Thread type

—	Rc
N	NPT
T	NPTF
F	G

How to Order Manifold

VV5ZA4 – 50 – 08 1 – 02 □

VZA4000 Series Manifold

Manifold specifications (P, EA, EB port size)

Symbol	Piping type	P, EA, EB port size
20	Body ported	Rc1/4
50	Base mounted	

Stations

02	2 Stations
⋮	⋮
10	10 Stations

Combination symbol (port specifications)

1	P, EA, EB common/side ported

Cylinder port size on the base

—	Body ported 20 type
01	Rc1/8
02	Rc1/4
C6	Built-in Ø 6 One-touch fitting
C8	Built-in Ø 8 One-touch fitting

Thread type

—	Rc
N	NPT
T	NPTF
F	G

How to Order Valve

VZA4 1 4 1 – 2 – □□ – □

Type of actuation

1	2 position single
2	2 position double
3	3 position closed center
4	3 position exhaust center

Body type

2	Body ported
4	Base mounted

Pilot port piping type

Symbol	Body ported	Base mounted
—	Body side	—
1	—	Sub-plate side (Not available for manifolds)
2	—	Body side

Port size

Symbol	Body ported	Base mounted
—	—	Without sub-plate
01	1/8	1/8
02	—	1/4

Thread type

—	Rc
N	NPT
T	NPTF
F	G

Option

F	With foot bracket

Note) Only VZA4121-01 (single) applicable.

With Bracket

VZA4000	Air operated valve model	VZA4121-01-F
	Bracket assembly part no.	VZ4000-22A

Dimensions: Body Ported

2 position single: VZA4121-01

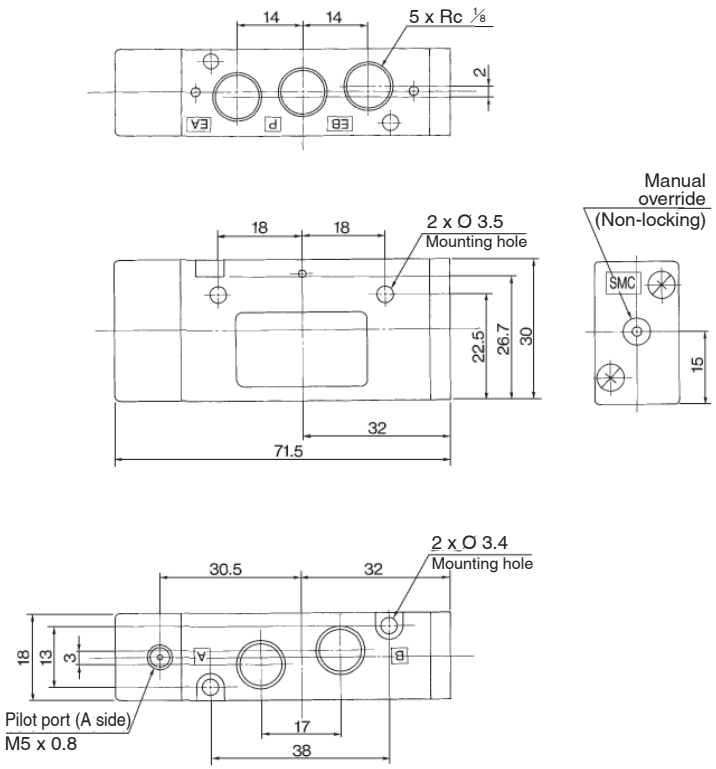

2 position double: VZA4221-01

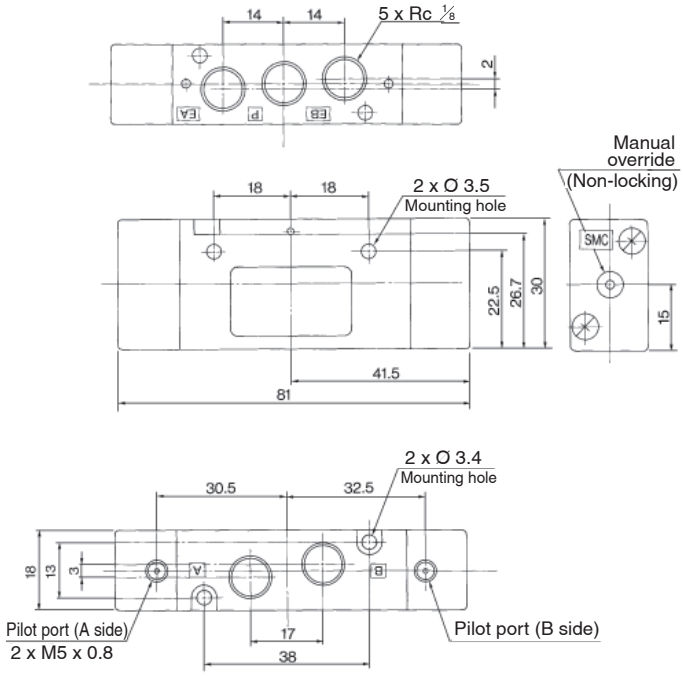

3 position closed center: VZA4321-01
3 position exhaust center: VZA4421-01

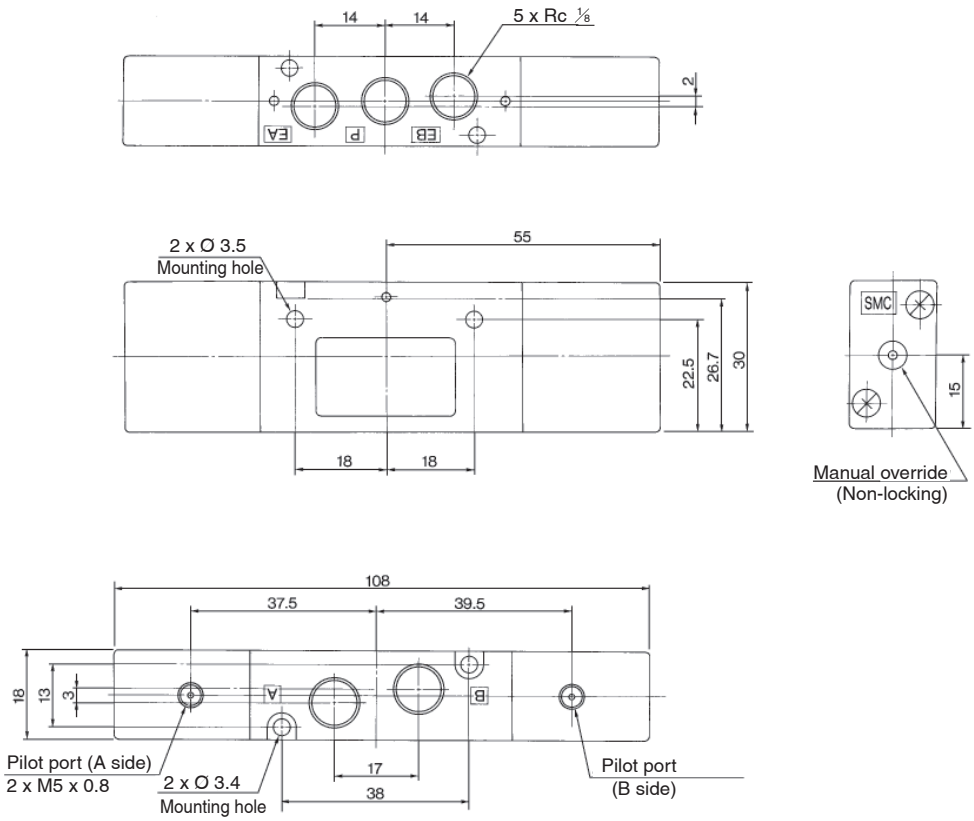

Dimensions: Base Mounted

2 position single: VZA4141-□-$^{01}_{02}$

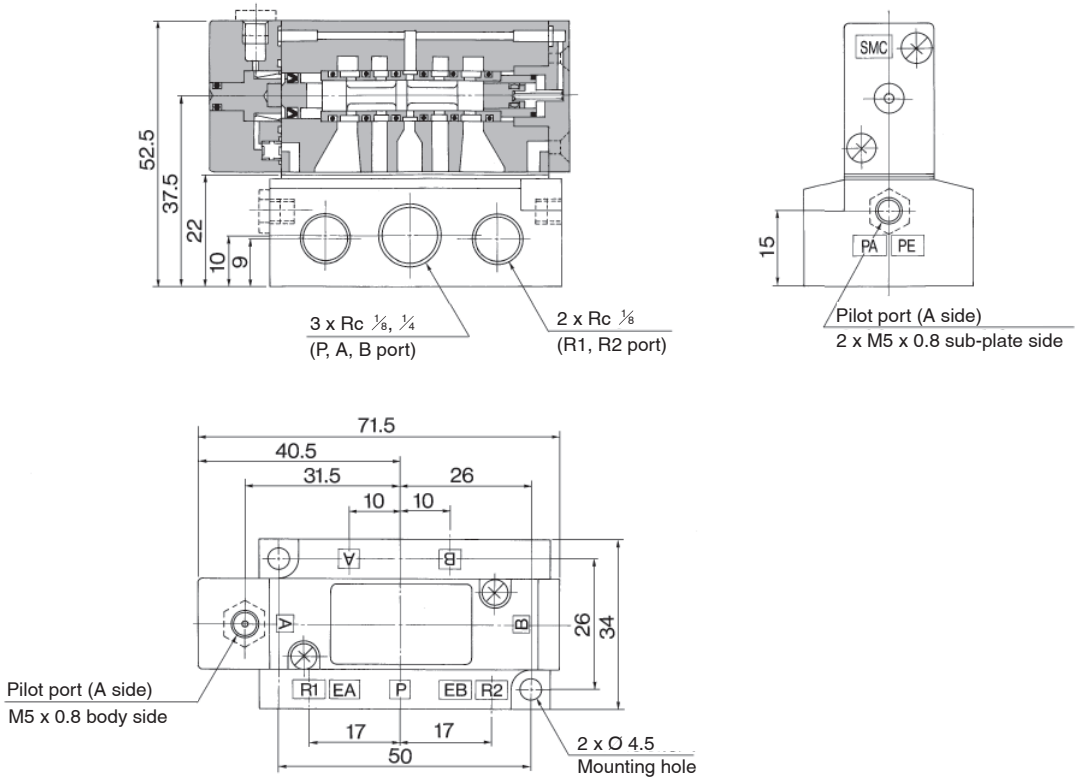

2 position double: VZA4241-□-$^{01}_{02}$

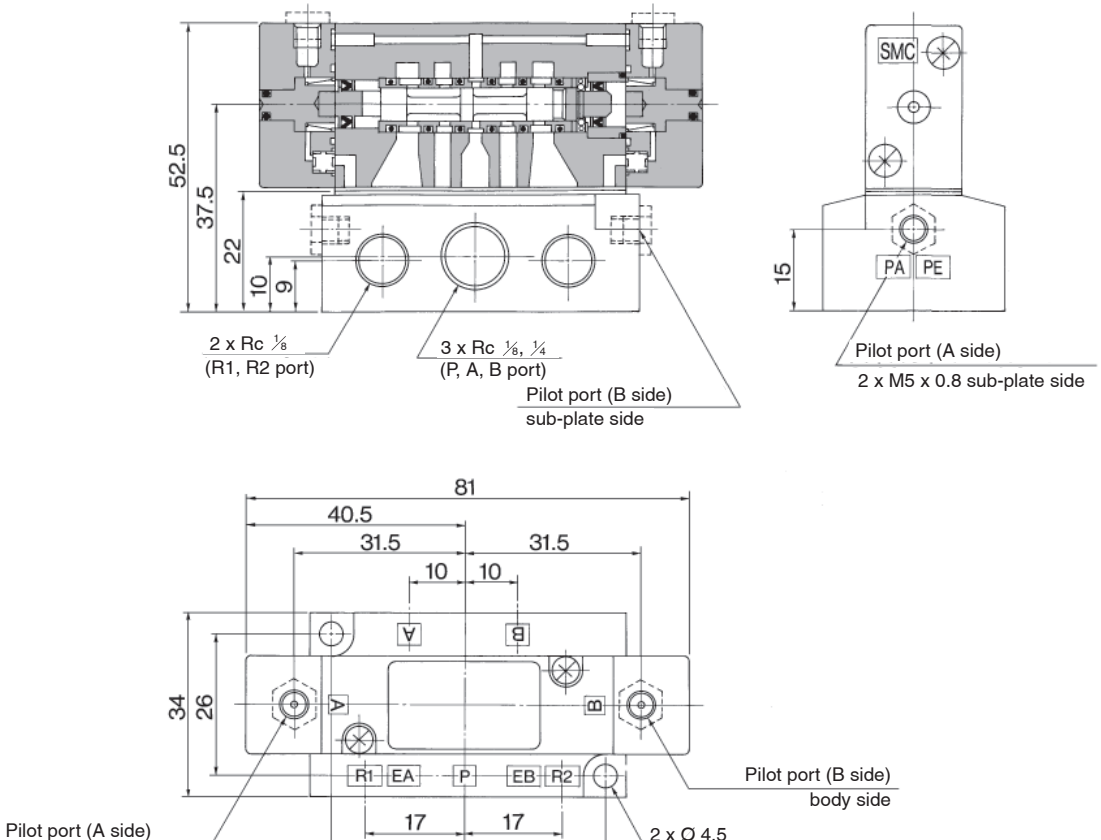

Dimensions: Base Mounted

3 position closed center: VZA4341-□-$^{01}_{02}$

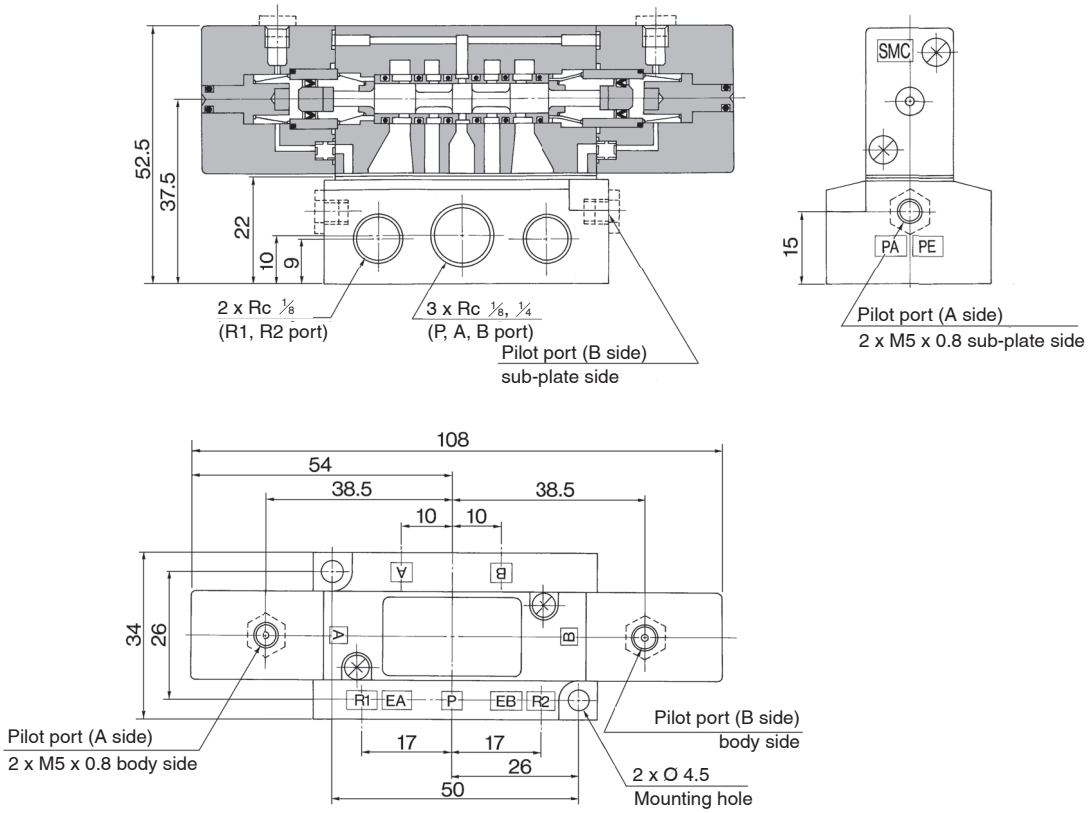

3 position exhaust center: VZA4441-□-$^{01}_{02}$

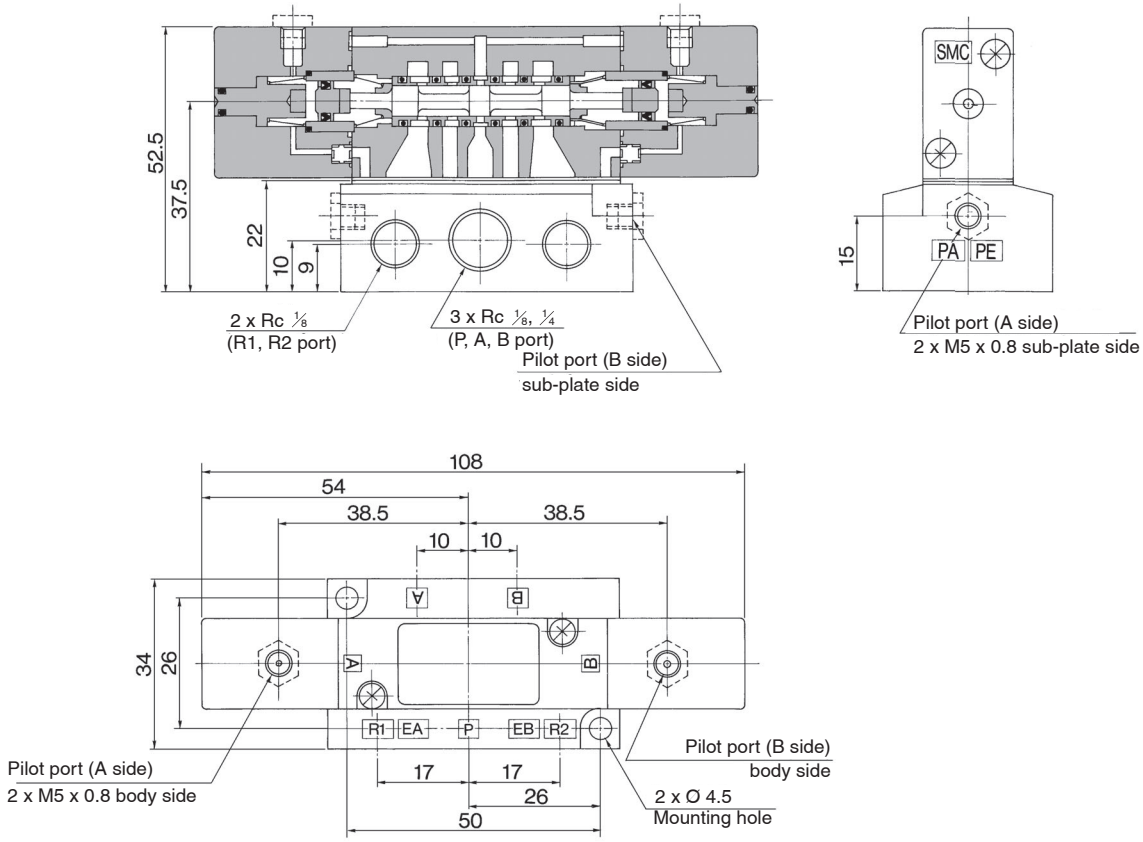

⚠ Safety Instructions

These safety instructions are intended to prevent hazardous situations and/or equipment damage. These instructions indicate the level of potential hazard with the labels of **"Caution**," **"Warning"** or **"Danger**." They are all important notes for safety and must be followed in addition to International Standards (ISO/IEC) [1], and other safety regulations.

⚠ **Danger:**	**Danger** indicates a hazard with a high level of risk which, if not avoided, will result in death or serious injury.
⚠ **Warning:**	**Warning** indicates a hazard with a medium level of risk which, if not avoided, could result in death or serious injury.
⚠ **Caution:**	**Caution** indicates a hazard with a low level of risk which, if not avoided, could result in minor or moderate injury.

1) ISO 4414: Pneumatic fluid power – General rules and safety requirements for systems and their components.
ISO 4413: Hydraulic fluid power – General rules and safety requirements for systems and their components.
IEC 60204-1: Safety of machinery – Electrical equipment of machines. (Part 1: General requirements)
ISO 10218-1: Robots and robotic devices - Safety requirements for industrial robots - Part 1: Robots.
etc.

⚠ Warning

1. The compatibility of the product is the responsibility of the person who designs the equipment or decides its specifications.
Since the product specified here is used under various operating conditions, its compatibility with specific equipment must be decided by the person who designs the equipment or decides its specifications based on necessary analysis and test results. The expected performance and safety assurance of the equipment will be the responsibility of the person who has determined its compatibility with the product. This person should also continuously review all specifications of the product referring to its latest catalogue information, with a view to giving due consideration to any possibility of equipment failure when configuring the equipment.

2. Only personnel with appropriate training should operate machinery and equipment.
The product specified here may become unsafe if handled incorrectly. The assembly, operation and maintenance of machines or equipment including our products must be performed by an operator who is appropriately trained and experienced.

3. Do not service or attempt to remove product and machinery/ equipment until safety is confirmed.
1. The inspection and maintenance of machinery/equipment should only be performed after measures to prevent falling or runaway of the driven objects have been confirmed.
2. When the product is to be removed, confirm that the safety measures as mentioned above are implemented and the power from any appropriate source is cut, and read and understand the specific product precautions of all relevant products carefully.
3. Before machinery/equipment is restarted, take measures to prevent unexpected operation and malfunction.

4. Our products cannot be used beyond their specifications.
Our products are not developed, designed, and manufactured to be used under the following conditions or environments.
Use under such conditions or environments is not covered.
1. Conditions and environments outside of the given specifications, or use outdoors or in a place exposed to direct sunlight.
2. Use for nuclear power, railways, aviation, space equipment, ships, vehicles, military application, equipment affecting human life, body, and property, fuel equipment, entertainment equipment, emergency shut-off circuits, press clutches, brake circuits, safety equipment, etc., and use for applications that do not conform to standard specifications such as catalogues and operation manuals.
3. Use for interlock circuits, except for use with double interlock such as installing a mechanical protection function in case of failure. Please periodically inspect the product to confirm that the product is operating properly.

⚠ Caution

We develop, design, and manufacture our products to be used for automatic control equipment, and provide them for peaceful use in manufacturing industries.
Use in non-manufacturing industries is not covered.
Products we manufacture and sell cannot be used for the purpose of transactions or certification specified in the Measurement Act.
The new Measurement Act prohibits use of any unit other than SI units in Japan.

Limited warranty and Disclaimer/Compliance Requirements

The product used is subject to the following "Limited warranty and Disclaimer" and "Compliance Requirements".Read and accept them before using the product.

Limited warranty and Disclaimer

1. The warranty period of the product is 1 year in service or 1.5 years after the product is delivered, whichever is first. [2] Also, the product may have specified durability, running distance or replacement parts. Please consult your nearest sales branch.
2. For any failure or damage reported within the warranty period which is clearly our responsibility, a replacement product or necessary parts will be provided. This limited warranty applies only to our product independently, and not to any other damage incurred due to the failure of the product.
3. Prior to using SMC products, please read and understand the warranty terms and disclaimers noted in the specified catalogue for the particular products.

2) Vacuum pads are excluded from this 1 year warranty.
A vacuum pad is a consumable part, so it is warranted for a year after it is delivered. Also, even within the warranty period, the wear of a product due to the use of the vacuum pad or failure due to the deterioration of rubber material are not covered by the limited warranty.

Compliance Requirements

1. The use of SMC products with production equipment for the manufacture of weapons of mass destruction (WMD) or any other weapon is strictly prohibited.
2. The exports of SMC products or technology from one country to another are governed by the relevant security laws and regulations of the countries involved in the transaction. Prior to the shipment of a SMC product to another country, assure that all local rules governing that export are known and followed.

SMC Corporation (Europe)

Austria	+43 (0)2262622800	www.smc.at	office@smc.at
Belgium	+32 (0)33551464	www.smc.be	info@smc.be
Bulgaria	+359 (0)2807670	www.smc.bg	office@smc.bg
Croatia	+385 (0)13707288	www.smc.hr	office@smc.hr
Czech Republic	+420 541424611	www.smc.cz	office@smc.cz
Denmark	+45 70252900	www.smcdk.com	smc@smcdk.com
Estonia	+372 651 0370	www.smcee.ee	info@smcee.ee
Finland	+358 207513513	www.smc.fi	smcfi@smc.fi
France	+33 (0)164761000	www.smc-france.fr	supportclient@smc-france.fr
Germany	+49 (0)61034020	www.smc.de	info@smc.de
Greece	+30 210 2717265	www.smchellas.gr	sales@smchellas.gr
Hungary	+36 23513000	www.smc.hu	office@smc.hu
Ireland	+353 (0)14039000	www.smcautomation.ie	sales@smcautomation.ie
Italy	+39 03990691	www.smcitalia.it	mailbox@smcitalia.it
Latvia	+371 67817700	www.smc.lv	info@smc.lv
Lithuania	+370 5 2308118	www.smclt.lt	info@smclt.lt
Netherlands	+31 (0)205318888	www.smc.nl	info@smc.nl
Norway	+47 67129020	www.smc-norge.no	post@smc-norge.no
Poland	+48 222119600	www.smc.pl	sales@smc.pl
Portugal	+351 214724500	www.smc.eu	apoioclientept@smc.smces.es
Romania	+40 213205111	www.smcromania.ro	smcromania@smcromania.ro
Russia	+7 (812)3036600	www.smc.eu	sales@smcru.com
Slovakia	+421 (0)413213212	www.smc.sk	office@smc.sk
Slovenia	+386 (0)73885412	www.smc.si	office@smc.si
Spain	+34 945184100	www.smc.eu	post@smc.smces.es
Sweden	+46 (0)86031240	www.smc.nu	smc@smc.nu
Switzerland	+41 (0)523963131	www.smc.ch	info@smc.ch
Turkey	+90 212 489 0 440	www.smcturkey.com.tr	info@smcturkey.com.tr
UK	+44 (0)845 121 5122	www.smc.uk	sales@smc.uk
South Africa	+27 10 900 1233	www.smcza.co.za	zasales@smcza.co.za

Printing BV 00 Printed in Spain

Specifications are subject to change without prior notice and any obligation on the part of the manufacturer