Direct Operated 2 Port Solenoid Valve New

Air | Medium vacuum | Water | Oil | Steam

* Can be used with heated water.

Note) For air and water only

RoHS

Large flow rate

Flow rate

20 % More flow*

(Size 1)

* Comparison with SMC conventional model

Compact

Height

10 % Smaller*

(Size 1)

Lightweight

Weight

30 % Lighter*

(Size 1, Aluminium body)

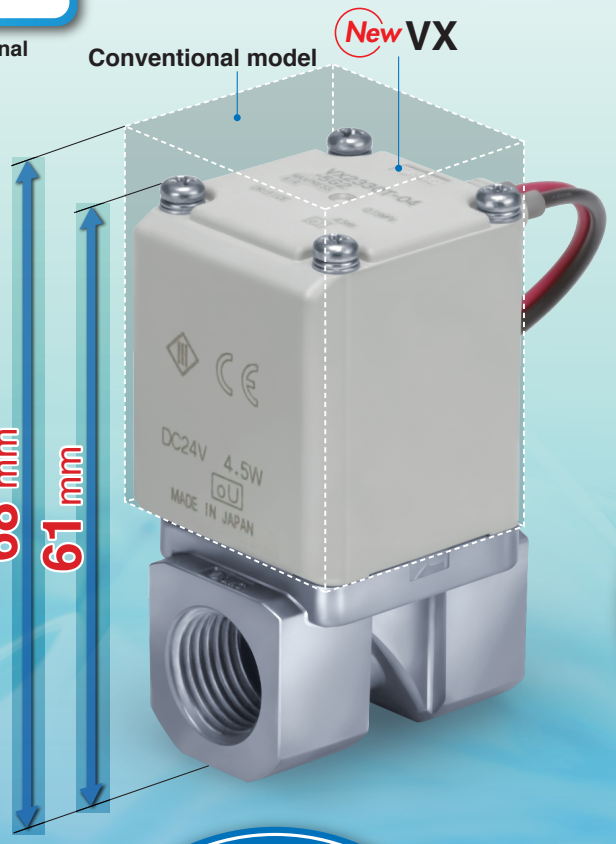

Body material

Air
Aluminium, Resin

Water/Oil/ Medium vacuum/Steam
C37 (Brass), Stainless steel

Enclosure

IP65*

* Electrical entry Flat terminal type terminal is IP40.

With One-touch fittings (Resin body)

Power consumption

4.5 W (Size 1)
7 W (Size 2)
10.5 W (Size 3)
(DC/N.C. valve)

Air | Medium vacuum

Manifold

Material
- Body/PPS
- Base/Aluminium
- Seal/NBR, FKM

Solenoid coil type

- Insulation type Class B/H
- Fluid temperature
  Class B/Max. 60 °C
  Class H/Max. 183 °C

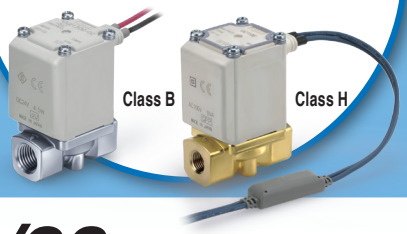

Valve type

N.C. N.O.

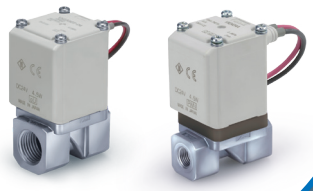

Series VX21/22/23

SMC

CAT.EUS70-44D-UK

Direct Operated 2 Port Solenoid Valve

Air | Medium vacuum | Water | Oil | Steam
* Can be used with heated water.

Enclosure IP65

Flame resistance UL94V-0 conformed
Flame resistant mold coil material

Low-noise construction
Metal noise reduced by the rubber bumper

Piping variations
Thread piping, One-touch fitting

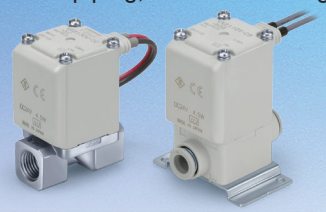

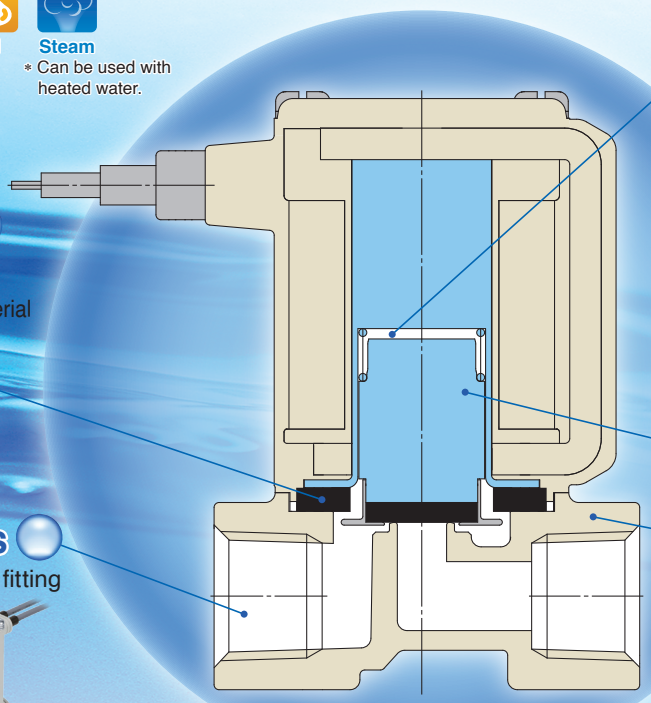

Clearance
By providing a bumper and clearance, we reduced the collision sound of the core when ON (when the valve is open). Because of the clearance, when using highly viscous fluids such as oil, the armature does not get stuck and the responsiveness when OFF (when the valve is closed) is improved.

Power consumption
* DC/Class B, N.C. valve

4.5 W (Size 1)
7 W (Size 2)
10.5 W (Size 3)

Improved armature durability

Body material
Air Aluminium, Resin
Water/ Oil/ Medium vacuum/ Steam C37 (Brass), Stainless steel

Full-wave rectifier type (AC specification: Insulation type Class B/H)

Improved durability
Service life is extended by the special construction. (compared with current shading coil)

Reduced buzz noise
Rectified to DC by the full-wave rectifier, resulting in a buzz noise reduction.

Reduced apparent power * Class B, N.C. valve
10 VA→**7** VA (Size 1) 20 VA→**9.5** VA (Size 2)
32 VA→**12** VA (Size 3)

Improved OFF response
Specially constructed to improve the OFF response when operated with a higher viscosity fluid such as oil.

Low-noise construction
Specially constructed to reduce the metal noise during operation.

Variations
<Fluid>

Model	Applicable fluid *1 (* Can be used with heated water.)				
	Air	Medium vacuum	Water	Oil	Steam
For Air VX2□0 Page 5	●	–	–	–	–
For Medium vacuum VX2□4 Page 10	●*2	●	–	–	–
For Water VX2□2 Page 14	●*2	–	●	–	–
For Oil VX2□3 Page 16	●*2	–	●*2	●	–
For Steam VX2□5 Page 18 (* Can be used with heated water.)	●*2	–	●*2	●*2	●

*1 For details, refer to pages 45 and 46. *2 Refer to the individual specifications for each fluid.

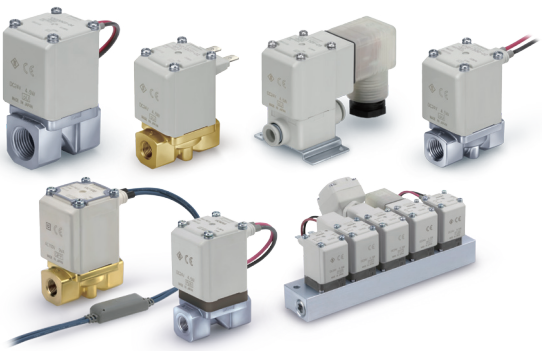

<Body Size>

Model	Body size	Orifice diameter							Port size
		2 mm Ø	3 mm Ø	4 mm Ø	5 mm Ø	7 mm Ø	8 mm Ø	10 mm Ø Note)	
VX2$^{1}_{4}$	Size 1	●	●	–	●	–	–	–	1/8, 1/4 One-touch fitting: Ø 6, Ø 8
VX2$^{2}_{5}$	Size 2	–	–	●	–	●	–	–	1/4, 3/8 One-touch fitting: Ø 8, Ø 10
VX2$^{3}_{6}$	Size 3	–	–	–	●	–	●	●	1/4, 3/8, 1/2 One-touch fitting: Ø 10, Ø 12

Note) N.C. only

INDEX

Direct Operated 2 Port Solenoid Valve
Series VX21/22/23

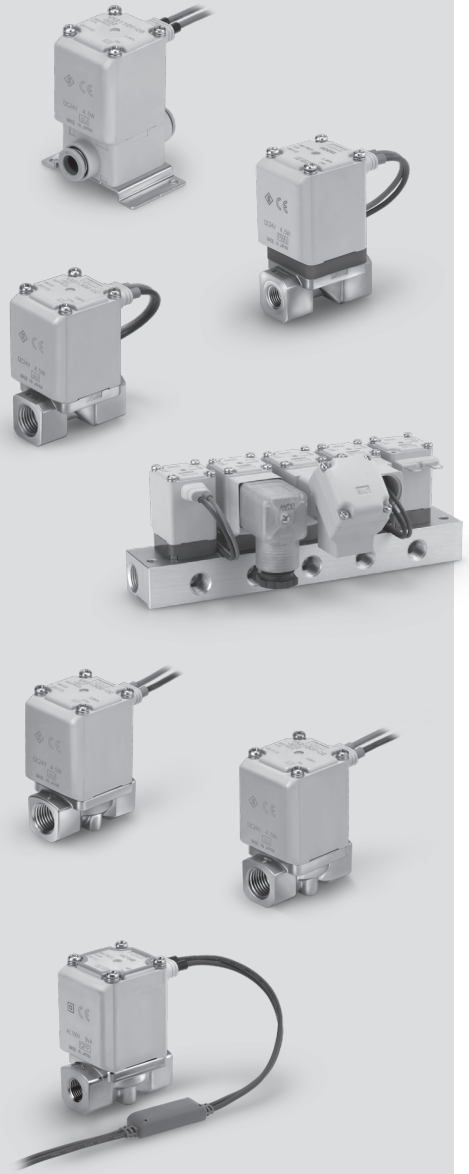

Single Unit/Manifold: Specifications 2
Common Specifications 3
Selection Steps 4

For Air
Model/Valve Specifications, Fluid and Ambient Temperature, Valve Leakage Rate ... 5, 6
How to Order (Single Unit) 7
Model/Valve Specifications, Fluid and Ambient Temperature, Valve Leakage Rate ... 8
How to Order (Solenoid Valve for Manifold, Manifold Base),
Blanking Plate Assembly Part No., How to Order Manifold Assembly (Example) ... 9

For Medium Vacuum (0.1 Pa·abs or more)
Model/Valve Specifications, Fluid and Ambient Temperature, Valve Leakage Rate ... 10
How to Order (Single Unit) 11
Model/Valve Specifications, Fluid and Ambient Temperature, Valve Leakage Rate ... 12
How to Order (Solenoid Valve for Manifold, Manifold Base),
Blanking Plate Assembly Part No., How to Order Manifold Assembly (Example) ... 13

For Water
Model/Valve Specifications, Fluid and Ambient Temperature, Valve Leakage Rate ... 14
How to Order (Single Unit) 15

For Oil
Model/Valve Specifications, Fluid and Ambient Temperature, Valve Leakage Rate ... 16
How to Order (Single Unit) 17

For Steam ∗ Can be used with heated water.
Model/Valve Specifications, Fluid and Ambient Temperature, Valve Leakage Rate ... 18
How to Order (Single Unit) 19

UL-compliant 22
Construction
Single Unit 24
Manifold 25
Dimensions (Single Unit) Body material: Aluminium 26
Body material: Resin 28
Body material: C37 (Brass), Stainless steel 30
(Manifold) Base material: Aluminium 33
Replacement Parts 34
Glossary of Terms 35
Solenoid Valve Flow-rate Characteristics 36
Flow-rate Characteristics 41
Specific Product Precautions 43

Direct Operated 2 Port Solenoid Valve
Series VX21/22/23
For Air, Medium Vacuum, Water, Oil and Steam

Variations

Single Unit (For Air, Medium Vacuum, Water, Oil and Steam)

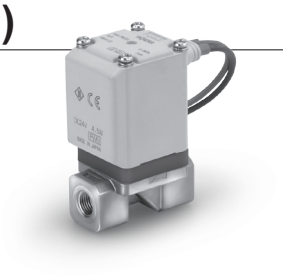

■ Valve type

Normally Closed (N.C.)
Normally Open (N.O.)

■ Solenoid coil type

Insulation type: Class B, Class H

■ Rated voltage

100 V/200 V/110 V/230 VAC
(220 V/240 V/48 V/24 VAC)
24 VDC (12 VDC)

Voltage in ( ) indicates special voltage.

■ Material

Body — Aluminium, Resin, C37 (Brass), Stainless steel
Seal — NBR, FKM*

* Refer to individual pages for details of each fluid.

■ Electrical entry

- Grommet
- Conduit
- DIN terminal
- Conduit terminal
- Flat terminal

Normally Closed (N.C.) **Normally Open (N.O.)**

Size		Size 1	Size 2	Size 3
Orifice diameter	2 mm Ø	●	—	—
	3 mm Ø	●	—	—
	4 mm Ø	—	●	—
	5 mm Ø	●	—	●
	7 mm Ø	—	●	—
	8 mm Ø	—	—	●
	10 mm Ø	—	—	●*
Port size		1/8, 1/4 Ø 6, Ø 8	1/4, 3/8 Ø 8, Ø 10	1/4, 3/8, 1/2 Ø 10, Ø 12

* N.C. only

Manifold (For Air, Medium Vacuum)

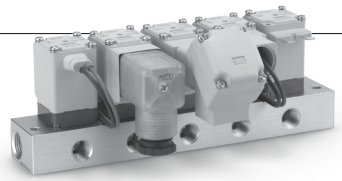

■ Valve type

Normally Closed (N.C.)
Normally Open (N.O.)

■ Manifold type

Common SUP type
Individual SUP type

■ Solenoid coil type

Insulation type: Class B

■ Rated voltage

100 V/200 V/110 V/230 VAC
(220 V/240 V/48 V/24 VAC)
24 VDC (12 VDC)

Voltage in ( ) indicates special voltage.

■ Material

Body — Resin
Base — Aluminium
Seal — NBR, FKM

■ Electrical entry

- Grommet
- Conduit
- DIN terminal
- Conduit terminal
- Flat terminal

Manifold

Size			Size 1	Size 2	Size 3
Orifice diameter		2 mm Ø	●	—	—
		3 mm Ø	●	—	—
		4 mm Ø	—	●	—
		5 mm Ø	●	—	●
		7 mm Ø	—	●	●
Port size	Common SUP type (Air)	IN	3/8		
		OUT	1/8, 1/4		
	Individual SUP type (Medium vacuum)	IN	1/8, 1/4		
		OUT	3/8		

Common Specifications

Standard Specifications

Valve specifications	Valve construction		Direct operated poppet
	Withstand pressure		2.0 MPa (Resin body type 1.5 MPa)
	Body material		Aluminium, Resin, C37 (Brass), Stainless steel
	Seal material Note 2)		NBR, FKM
	Enclosure		Dust-tight, Water-jet-proof type (IP65) Note 1) Note 4)
	Environment		Location without the presence of corrosive gases, explosive gases, or constant fluid adhesion Note 4)
Coil specifications	Rated voltage	AC	4 VAC, 48 VAC, 100 VAC, 110 VAC, 200 VAC, 220 VAC, 230 VAC, 240 VAC Note 3)
		DC	12 VDC, 24 VDC Note 3)
	Allowable voltage fluctuation		±10 % of rated voltage
	Allowable leakage voltage	AC	5 % or less of rated voltage
		DC	2 % or less of rated voltage
	Coil insulation type		Class B, Class H

Note 1) Electrical entry flat terminal type terminal is IP40.
Note 2) For seal material/EPDM, refer to X332. (Refer to page 21.)
Note 3) Voltage in ( ) indicates special voltage.
Note 4) For enclosure, refer to "Glossary of Terms" on page 35.

⚠ **Be sure to read "Specific Product Precautions" before handling.**

Solenoid Coil Specifications

Normally Closed (N.C.)

DC Specification

Class B

Size	Power consumption [W] Note 1)	Temperature rise [°C] Note 2)
Size 1	4.5	50
Size 2	7	55
Size 3	10.5	65

Class H

Size	Power consumption [W] Note 1)	Temperature rise [°C] Note 2)
Size 1	9	100
Size 2	12	100
Size 3	15	100

Note 1) Power consumption: The value at ambient temperature of 20 °C and when the rated voltage is applied. (Variation: ±10 %)
Note 2) The value at ambient temperature of 20 °C and when the rated voltage is applied. The value depends on the ambient environment. This is for reference.

AC Specification (Built-in Full-wave Rectifier Type)

Class B

Size	Apparent power [VA] Note 1) 2)	Temperature rise [°C] Note 3)
Size 1	7	60
Size 2	9.5	70
Size 3	12	70

Class H

Size	Apparent power [VA] Note 1) 2)	Temperature rise [°C] Note 3)
Size 1	9	100
Size 2	12	100
Size 3	15	100

Note 1) Apparent power: The value at ambient temperature of 20 °C and when the rated voltage is applied. (Variation: ±10 %)
Note 2) There is no difference in the frequency and the inrush and energized apparent power, since a rectifying circuit is used in the AC.
Note 3) The value at ambient temperature of 20 °C and when the rated voltage is applied. The value depends on the ambient environment. This is for reference.

Normally Open (N.O.)

DC Specification

Class B

Size	Power consumption [W] Note 1)	Temperature rise [°C] Note 2)
Size 1	7.5	60
Size 2	8.5	70
Size 3	12.5	70

Class H

Size	Power consumption [W] Note 1)	Temperature rise [°C] Note 2)
Size 1	9	100
Size 2	12	100
Size 3	15	100

Note 1) Power consumption: The value at ambient temperature of 20 °C and when the rated voltage is applied. (Variation: ±10 %)
Note 2) The value at ambient temperature of 20 °C and when the rated voltage is applied. The value depends on the ambient environment. This is for reference.

AC Specification (Built-in Full-wave Rectifier Type)

Class B

Size	Apparent power [VA] Note 1) 2)	Temperature rise [°C] Note 3)
Size 1	9	60
Size 2	10	70
Size 3	14	70

Class H

Size	Apparent power [VA] Note 1) 2)	Temperature rise [°C] Note 3)
Size 1	9	100
Size 2	12	100
Size 3	15	100

Note 1) Apparent power: The value at ambient temperature of 20 °C and when the rated voltage is applied. (Variation: ±10 %)
Note 2) There is no difference in the frequency and the inrush and energized apparent power, since a rectifying circuit is used in the AC.
Note 3) The value at ambient temperature of 20 °C and when the rated voltage is applied. The value depends on the ambient environment. This is for reference.

Selection Steps

Selection Steps

Step 1 **Select the fluid.**

Item	Selection item	Page	Symbol	
Select the fluid.	Air	Page 5, 6	0	❶
	Water	Page 14	2	
	Oil	Page 16	3	
	Medium vacuum	Page 10	4	
	Steam ※ Can be used with heated water.	Page 18	5	

VX2 3 **0** A A ❶

Step 2 **Select "Body material", "Port size" and "Orifice diameter" from "Flow rate — Pressure" of each fluid.**

Item	Selection item		Symbol	
Select from "Flow rate — Pressure." ● Body material ● Port size ● Orifice diameter	Size	Size 3	3	❷
	Body material	Aluminium	A	❸
	Port size	1/8		
	Orifice diameter	2		

VX2 **3** 0 **A** A ❷ ❸

Step 3 **Select electrical specification.**

Item	Selection item		Symbol	
Select electrical specification.	Voltage	24 VDC	A	❹
	Electrical entry	Grommet		

VX2 3 0 A **A** ❹

Step 4 **For special options, refer to each "How to Order".**

For Air Single Unit

Model/Valve Specifications

N.C.

Symbol

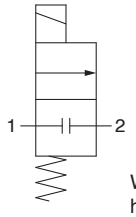

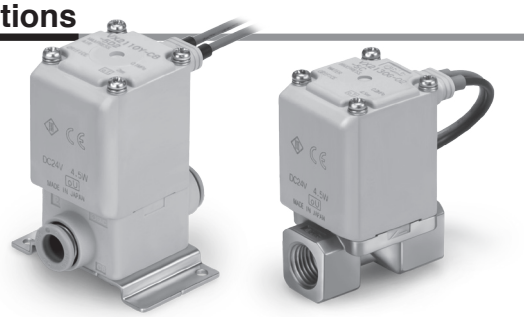

When the valve is closed, flow is blocked from port 1 to port 2. However, if the pressure in port 2 is higher than port 1, the valve will not be able to block the fluid and it will flow from port 2 to port 1.

Aluminum Body Type

Size	Port size	Orifice diameter [mm Ø]	Model	Flow-rate characteristics			Maximum operating pressure differential [MPa]	Max. system pressure [MPa]	Weight Note) [g]
				C [dm³/(s·bar)]	b	Cv			
1	1/8, 1/4	2	VX210	0.63	0.63	0.23	1.0	1.0	220
		3		1.05	0.68	0.41	0.6		220
		5		2.20	0.39	0.62	0.2		220
2	1/4, 3/8	4	VX220	1.90	0.52	0.62	1.0		340
		7		3.99	0.44	1.08	0.15		340
3	1/4, 3/8	5	VX230	1.96	0.55	0.75	1.0		450
		8		5.67	0.33	1.58	0.3		450
		10		5.74	0.64	2.21	0.1		450
	1/2	10		8.42	0.39	2.21	0.1		470

Resin Body Type (Built-in One-touch Fittings)

Size	Port size	Orifice diameter [mm Ø]	Model	Flow-rate characteristics			Maximum operating pressure differential [MPa]	Max. system pressure [MPa]	Weight Note) [g]
				C [dm³/(s·bar)]	b	Cv			
1	Ø 6	2	VX210	0.82	0.44	0.23	1.0	1.0	220
		3		1.25	0.34	0.35	0.6		220
		5		1.45	0.43	0.40	0.2		220
	Ø 8	2		0.82	0.44	0.23	1.0		220
		3		1.81	0.40	0.41	0.6		220
		5		2.11	0.32	0.56	0.2		220
2	Ø 8	4	VX220	1.69	0.40	0.47	1.0		340
		7		3.14	0.34	0.84	0.15		340
	Ø 10	4		1.68	0.49	0.50	1.0		340
		7		3.54	0.36	0.90	0.15		340
3	Ø 10	5	VX230	2.50	0.44	0.70	1.0		460
		8		2.77	0.82	1.22	0.3		460
		10		5.69	0.46	1.54	0.1		460
	Ø 12	5		2.50	0.44	0.70	1.0		460
		8		2.56	0.88	1.38	0.3		460
		10		5.69	0.64	1.76	0.1		460

Note) Weight of grommet type. Add 10 g for conduit type, 30 g for DIN terminal type, 60 g for conduit terminal type respectively.
• Refer to "Glossary of Terms" on page 35 for details on the maximum operating pressure differential.

Fluid and Ambient Temperature

Fluid temperature [°C]	Ambient temperature [°C]
−10 Note) to 60	−20 to 60

Note) Dew point temperature: −10 °C or less

Valve Leakage Rate

Internal Leakage

Seal material Note 2)	Leakage rate (Air) Note 1)
NBR (FKM)	1 cm³/min or less (Aluminium body type)
	15 cm³/min or less (Resin body type)

External Leakage

Seal material Note 2)	Leakage rate (Air) Note 1)
NBR (FKM)	1 cm³/min or less (Aluminium body type)
	15 cm³/min or less (Resin body type)

Note 1) Leakage is the value at ambient temperature 20 °C.
Note 2) For seal material/FKM, refer to "Other Options".
Note 3) The amount of leakage is the value at a differential pressure of 0.01 MPa or more, and a temperature of 20°C.

For Air Single Unit

Model/Valve Specifications

N.O.

Symbol

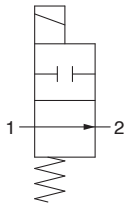

When the valve is closed, flow is blocked from port 1 to port 2. However, if the pressure in port 2 is higher than port 1, the valve will not be able to block the fluid and it will flow from port 2 to port 1.

Aluminum Body Type

Size	Port size	Orifice diameter [mm Ø]	Model	Flow-rate characteristics			Maximum operating pressure differential [MPa]	Max. system pressure [MPa]	Weight Note) [g]
				C [dm³/(s·bar)]	b	Cv			
1	1/8, 1/4	2	VX240	0.63	0.63	0.23	0.9	1.0	240
		3		1.05	0.68	0.41	0.45		240
		5		2.20	0.39	0.62	0.2		240
2	1/4, 3/8	4	VX250	1.90	0.52	0.62	0.8		370
		7		3.99	0.44	1.08	0.15		370
3	1/4, 3/8	5	VX260	1.96	0.55	0.75	0.8		490
		8		5.67	0.33	1.58	0.3		490

Resin Body Type (Built-in One-touch Fittings)

Size	Port size	Orifice diameter [mm Ø]	Model	Flow-rate characteristics			Maximum operating pressure differential [MPa]	Max. system pressure [MPa]	Weight Note) [g]
				C [dm³/(s·bar)]	b	Cv			
1	Ø 6	2	VX240	0.82	0.44	0.23	0.9	1.0	240
		3		1.25	0.34	0.35	0.45		240
		5		1.45	0.43	0.40	0.2		240
	Ø 8	2		0.82	0.44	0.23	0.9		240
		3		1.81	0.40	0.41	0.45		240
		5		2.11	0.32	0.56	0.2		240
2	Ø 8	4	VX250	1.69	0.40	0.47	0.8		370
		7		3.14	0.34	0.84	0.15		370
	Ø 10	4		1.68	0.49	0.50	0.8		370
		7		3.54	0.36	0.90	0.15		370
3	Ø 10	5	VX260	2.50	0.44	0.70	0.8		500
		8		2.77	0.82	1.22	0.3		500
	Ø 12	5		2.50	0.42	0.70	0.8		500
		8		2.56	0.88	1.38	0.3		500

Note) Weight of grommet type. Add 10 g for conduit type, 30 g for DIN terminal type, 60 g for conduit terminal type respectively.
- Refer to "Glossary of Terms" on page 35 for details on the maximum operating pressure differential.

Fluid and Ambient Temperature

Fluid temperature [°C]	Ambient temperature [°C]
−10 Note) to 60	−20 to 60

Note) Dew point temperature: −10 °C or less

Valve Leakage Rate

Internal Leakage

Seal material Note 2)	Leakage rate (Air) Note 1)
NBR (FKM)	1 cm³/min or less (Aluminium body type)
	15 cm³/min or less (Resin body type)

External Leakage

Seal material Note 2)	Leakage rate (Air) Note 1)
NBR (FKM)	1 cm³/min or less (Aluminium body type)
	15 cm³/min or less (Resin body type)

Note 1) Leakage is the value at ambient temperature 20 °C.
Note 2) For seal material/FKM, refer to "Other Options".
Note 3) The amount of leakage is the value at a differential pressure of 0.01 MPa or more, and a temperature of 20°C.

How to Order (Single Unit)

Note) Refer to the table on page 22 for UL-compliant.

RoHS

VX2 1 0 A A A

Fluid

0	Air

Coil size/Valve type

Size	Symbol	Valve type
Size 1	1	N.C.
	4	N.O.
Size 2	2	N.C.
	5	N.O.
Size 3	3	N.C.
	6	N.O.

Body material/Port size/Orifice diameter

Symbol	Body material	Port size	Orifice diameter
A	Aluminium	1/8	2
B			3
C			5
D		1/4	2
E			3
F			5
H	Resin* (With bracket)	Ø 6	2
J			3
K			5
L		Ø 8	2
M			3
N			5
A	Aluminium	1/4	4
B			7
D		3/8	4
E			7
H	Resin* (With bracket)	Ø 8	4
J			7
L		Ø 10	4
M			7
A	Aluminium	1/4	5
B			8
C			10 (N.C. only)
D		3/8	5
E			8
F			10 (N.C. only)
G		1/2	10 (N.C. only)
H	Resin* (With bracket)	Ø 10	5
J			8
K			10 (N.C. only)
L		Ø 12	5
M			8
N			10 (N.C. only)

* One-touch fittings are attached to the

Other option

Symbol	Seal material *2	Oil-free	Port thread
—	NBR	—	Standard (Rc)*1
A	NBR	—	G
B			NPT
C	FKM	—	Standard (Rc)*1
D	NBR	○	G
E			NPT
F	FKM	—	G
G			NPT
H	FKM	○	Standard (Rc)*1
K			G
L			NPT
Z	NBR	○	Standard (Rc)*1

*1 When the body is resin, one-touch fittings are equipped as standard. Resin body is only applicable to C, H and Z options.

*2 For low concetration ozone resistant, select seal material FKM.

Voltage/Electrical entry (coil insulation type: Class B)

Symbol	Voltage	Electrical entry
A	24 VDC	Grommet
B	100 VAC	Grommet (With surge voltage suppressor)
C	110 VAC	
D	200 VAC	
E	230 VAC	
F	24 VDC	
G	24 VDC	DIN terminal (With surge voltage suppressor)
H	100 VAC	
J	110 VAC	
K	200 VAC	
L	230 VAC	
M	24 VDC	Conduit terminal (With surge voltage suppressor)
N	100 VAC	
P	110 VAC	
Q	200 VAC	
R	230 VAC	
S	24 VDC	Conduit (With surge voltage suppressor)
T	100 VAC	
U	110 VAC	
V	200 VAC	
W	230 VAC	
Y	24 VDC	Flat terminal
Z1A	48 VAC	Grommet (With surge voltage suppressor)
Z1B	220 VAC	
Z1C	240 VAC	
Z1U	24 VAC	
Z1D	12 VDC	Grommet
Z1E	12 VDC	Grommet (With surge voltage suppressor)
Z1F	48 VAC	DIN terminal (With surge voltage suppressor)
Z1G	220 VAC	
Z1H	240 VAC	
Z1V	24 VAC	
Z1J	12 VDC	
Z1K	48 VAC	Conduit terminal (With surge voltage suppressor)
Z1L	220 VAC	
Z1M	240 VAC	
Z1W	24 VAC	
Z1N	12 VDC	
Z1P	48 VAC	Conduit (With surge voltage suppressor)
Z1Q	220 VAC	
Z1R	240 VAC	
Z1Y	24 VAC	
Z1S	12 VDC	
Z1T	12 VDC	Flat terminal

Symbol	Voltage	Electrical entry
Z2A	24 VDC	DIN terminal (With surge voltage suppressor, with light)
Z2B	100 VAC	
Z2C	110 VAC	
Z2D	200 VAC	
Z2E	230 VAC	
Z2F	48 VAC	
Z2G	220 VAC	
Z2H	240 VAC	
Z2V	24 VAC	
Z2J	12 VDC	
Z2K	24 VDC	Conduit terminal (With surge voltage suppressor, with light)
Z2L	100 VAC	
Z2M	110 VAC	
Z2N	200 VAC	
Z2P	230 VAC	
Z2Q	48 VAC	
Z2R	220 VAC	
Z2S	240 VAC	
Z2W	24 VAC	
Z2T	12 VDC	
Z3A	24 VDC	DIN terminal (With surge voltage suppressor, without DIN connector)
Z3B	100 VAC	
Z3C	110 VAC	
Z3D	200 VAC	
Z3E	230 VAC	
Z3F	48 VAC	
Z3G	220 VAC	
Z3H	240 VAC	
Z3V	24 VAC	
Z3J	12 VDC	

Note) Select brass (C37), in the type "for water" when interchangeable product is necessary for air.

Dimensions → Pages 26 to 29 (Single unit)

For Air Manifold

Model/Valve Specifications

N.C.

Symbol

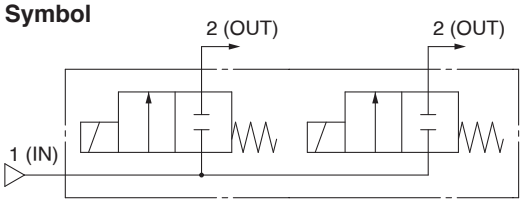

Common SUP type

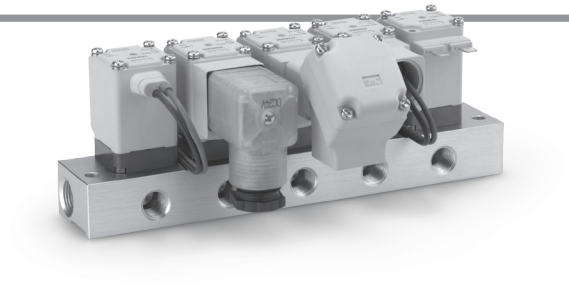

N.O.

Symbol

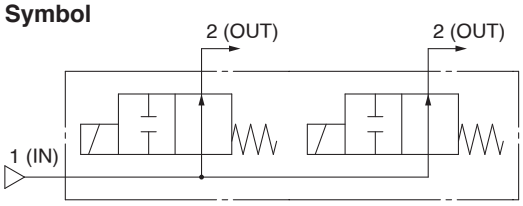

Common SUP type

When the valve is closed, flow is blocked from port 1 to port 2. However, if the pressure in port 2 is higher than port 1, the valve will not be able to block the fluid and it will flow from port 2 to port 1.

Normally Closed (N.C.)

Size	Orifice diameter [mm Ø]	Model	Flow-rate characteristics			Maximum operating pressure differential [MPa]	Max. system pressure [MPa]
			C [dm³/(s·bar)]	b	Cv		
1	2	VX2A0	0.63	0.63	0.23	1.0	1.0
	3		1.05	0.68	0.41	0.6	
	5		2.20	0.39	0.62	0.2	
2	4	VX2B0	1.90	0.52	0.62	1.0	
	7		3.99	0.44	1.08	0.15	
3	5	VX2C0	1.96	0.55	0.75	1.0	
	7		3.99	0.44	1.08	0.3	

Normally Open (N.O.)

Size	Orifice diameter [mm Ø]	Model	Flow-rate characteristics			Maximum operating pressure differential [MPa]	Max. system pressure [MPa]
			C [dm³/(s·bar)]	b	Cv		
1	2	VX2D0	0.63	0.63	0.23	0.9	1.0
	3		1.05	0.68	0.41	0.45	
	5		2.20	0.39	0.62	0.2	
2	4	VX2E0	1.90	0.52	0.62	0.8	
	7		3.99	0.44	1.08	0.15	
3	5	VX2F0	1.96	0.55	0.75	0.8	
	7		3.99	0.44	1.08	0.3	

Fluid and Ambient Temperature

Fluid temperature [°C]	Ambient temperature [°C]
–10 Note) to 60	–20 to 60

Note) Dew point temperature: –10 °C or less

Valve Leakage Rate

Internal Leakage

Seal material Note 2)	Leakage rate Note 1)
NBR (FKM)	1 cm³/min or less

External Leakage

Seal material Note 2)	Leakage rate Note 1)
NBR (FKM)	1 cm³/min or less

Note 1) Leakage is the value at ambient temperature 20 °C.
Note 2) For seal material/FKM, refer to “Other Options”.
Note 3) The amount of leakage is the value at a differential pressure of 0.01 MPa or more, and a temperature of 20°C.

How to Order (Solenoid Valve for Manifold)

VX2 [A] 0 [A] [A]

Fluid

0	Air

Common Specifications

Seal material	NBR
Coil insulation type	Class B

Coil size/Valve type

Size	Symbol	Valve type
Size 1	A	N.C.
	D	N.O.
Size 2	B	N.C.
	E	N.O.
Size 3	C	N.C.
	F	N.O.

Body material/Orifice diameter

Symbol	Body material	Orifice diameter
A	Resin	2
B		3
C		5
A	Resin	4
B		7
A	Resin	5
B		7

Voltage/Electrical entry

Symbol	Voltage	Electrical entry
A	24 VDC	Grommet
B	100 VAC	Grommet (With surge voltage suppressor)
C	110 VAC	
D	200 VAC	
E	230 VAC	
F	24 VDC	
G	24 VDC	DIN terminal (With surge voltage suppressor)
H	100 VAC	
J	110 VAC	
K	200 VAC	
L	230 VAC	
M	24 VDC	Conduit terminal (With surge voltage suppressor)
N	100 VAC	
P	110 VAC	
Q	200 VAC	
R	230 VAC	
S	24 VDC	Conduit (With surge voltage suppressor)
T	100 VAC	
U	110 VAC	
V	200 VAC	
W	230 VAC	
Y	24 VDC	Flat terminal
Z	Other voltages	

For special options, refer to pages XX to XX.

Special voltage	24 VAC
	48 VAC
	220 VAC
	240 VAC
	12 VDC
DIN terminal with light	
Conduit terminal with light	
Without DIN connector	
Seal material: EPDM	
Low concentration ozone resistant (Seal material: FKM)	
Oil-free	
Special electrical entry direction	

⚠Caution
Mounting orientation exists when mounting valves onto manifold base. Refer to page XX for details.

Manifold Base/How to Order

VVX2 [1] 0 [A] [02] [ ]

Fluid

0	Air

Coil size

Size	Symbol
Size 1	1
Size 2	2
Size 3	3

Base material/Port size/Base type

Symbol	Base material	Individual port size	Base type
A	Aluminum	1/8	Common SUP
B		1/4	

Common port size: 3/8 (IN port)

Stations

Symbol	Stations
02	2 stations
03	3 stations
04	4 stations
05	5 stations
06	6 stations
07	7 stations
08	8 stations
09	9 stations
10	10 stations

Symbol	Oil-free	Special thread
—	—	Rc
A	—	G*1
B	—	NPT
D	○	G*1
E	○	NPT
Z	○	Rc

*1 For connection, prepare a fitting compliant with ISO 16030 and JIS B 8674.

Blanking Plate Assembly Part No.

For size 1 VVX021S-4A-[N]
For size 2 VVX022S-4A-[N]
For size 3 VVX023S-4A-[N]

When mounting a blanking plate assembly, if the solenoid valve for the manifold is ozone resistant, (Seal material: FKM), please select FKM.

Seal material

N	NBR
F	FKM

Dimensions → Page 33

How to Order Manifold Assembly (Example)

Enter the valve and blanking plate to be mounted under the manifold base part number.

<Example>

VVX210B05.....1
***VX2A0AA 4**
***VVX021S-4A-N 1**
"*" is the symbol for mounting.
Add an "*" in front of the part numbers for solenoid valves etc. to be mounted.

D side (Stations) 1 2 3 4 5 U side

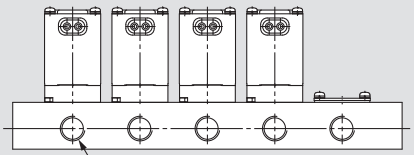

5 x Rc1/4
(Individual port)

Enter the product's part number in order, counting the 1st station from the D side (left in the manifold arrangement, when viewing the individual port in front).

For Medium Vacuum (0.1 Pa·abs or more) Single Unit

Model/Valve Specifications

Symbol (Application example)

N.C.

① **Used with vacuum**

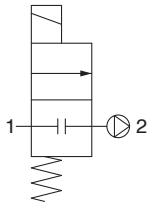

② **Used with pressure**

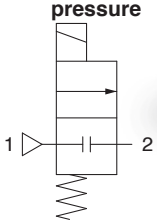

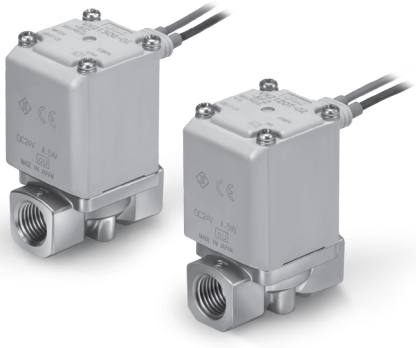

When the valve is closed, flow is blocked from port 1 to port 2. However, if the pressure in port 2 is higher than port 1, the valve will not be able to block the fluid and it will flow from port 2 to port 1.

Symbol (Application example)

N.O.

① **Used with vacuum**

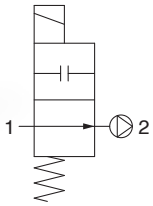

② **Used with pressure**

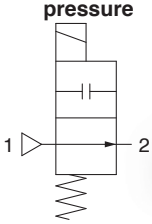

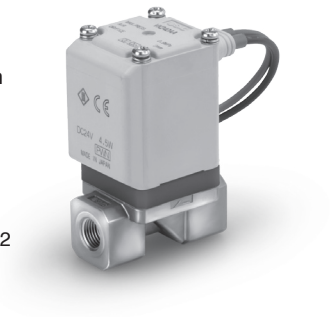

When the valve is closed, flow is blocked from port 1 to port 2. However, if the pressure in port 2 is higher than port 1, the valve will not be able to block the fluid and it will flow from port 2 to port 1.

Normally Closed (N.C.)

Size	Port size	Orifice diameter [mm Ø]	Model	Flow-rate characteristics			Operating pressure range		Max. system pressure [MPa]	Weight [g] Note)
				C [dm³/(s·bar)]	b	Cv	① Used with vacuum (Pa·abs)	② Used with pressure (MPa·G)		
1	1/8, 1/4	2	VX214	0.63	0.63	0.23	0.1 to atmospheric pressure	0 to 1.0	1.0	300
		3		1.05	0.68	0.41		0 to 0.6		300
		5		2.20	0.39	0.62		0 to 0.2		300
2	1/4, 3/8	4	VX224	1.90	0.52	0.62		0 to 1.0		460
		7		3.99	0.44	1.08		0 to 0.15		460
3	1/4, 3/8	5	VX234	1.96	0.55	0.75		0 to 1.0		580
		8		5.67	0.33	1.58		0 to 0.3		580
		10		5.74	0.64	2.21		0 to 0.1		580
	1/2	10		8.42	0.39	2.21		0 to 0.1		630

Normally Open (N.O.)

Size	Port size	Orifice diameter [mm Ø]	Model	Flow-rate characteristics			Operating pressure range		Max. system pressure [MPa]	Weight [g] Note)
				C [dm³/(s·bar)]	b	Cv	① Used with vacuum (Pa·abs)	② Used with pressure (MPa·G)		
1	1/8, 1/4	2	VX244	0.63	0.63	0.23	0.1 to atmospheric pressure	0 to 0.9	1.0	320
		3		1.05	0.68	0.41		0 to 0.45		320
		5		2.20	0.39	0.62		0 to 0.2		320
2	1/4, 3/8	4	VX254	1.90	0.52	0.62		0 to 0.8		490
		7		3.99	0.44	1.08		0 to 0.15		490
3	1/4, 3/8	5	VX264	1.96	0.55	0.75		0 to 0.8		620
		8		5.67	0.33	1.58		0 to 0.3		620

Note) Weight of grommet type. Add 10 g for conduit type, 30 g for DIN terminal type, 60 g for conduit terminal type respectively.

Fluid and Ambient Temperature

Fluid temperature [°C]	Ambient temperature [°C]
1 to 60 Note)	−20 to 60

Note) With no freezing

Valve Leakage Rate

Internal Leakage

Seal material	Leakage rate Note)
FKM	10^{-6} Pa·m³/sec or less

External Leakage

Seal material	Leakage rate Note)
FKM	10^{-6} Pa·m³/sec or less

Note) Leakage (10^{-6} Pa·m³/sec) is the value at differential pressure 0.1 MPa and ambient temperature 20 °C.

How to Order (Single Unit)

VX2 [1] 4 [A] [A] [A] [ ]

Fluid

4	Medium vacuum

Coil size/Valve type

Size	Symbol	Valve type
Size 1	1	N.C.
	4	N.O.
Size 2	2	N.C.
	5	N.O.
Size 3	3	N.C.
	6	N.O.

Body material/Port size/Orifice diameter

Symbol	Body material	Port size	Orifice diameter
A	C37 (Brass)	1/8	2
B			3
C			5
D		1/4	2
E			3
F			5
H	Stainless steel	1/8	2
J			3
K			5
L		1/4	2
M			3
N			5
A	C37 (Brass)	1/4	4
B			7
D		3/8	4
E			7
H	Stainless steel	1/4	4
J			7
L		3/8	4
M			7
A	C37 (Brass)	1/4	5
B			8
C			10 (N.C. only)
D		3/8	5
E			8
F			10 (N.C. only)
G		1/2	10 (N.C. only)
H	Stainless steel	1/4	5
J			8
K			10 (N.C. only)
L		3/8	5
M			8
N			10 (N.C. only)
P		1/2	10 (N.C. only)

Common Specifications

Seal material	FKM
Oil-free	
Non-leak	

Interchangeable with existing bracket

—	No
XB	Yes

Note) For more information, please see table below.

Other option

Symbol	Port thread
—	Standard (Rc)
A	G
B	NPT

Voltage/Electrical entry (coil insulation type: Class B)

Symbol	Voltage	Electrical entry
A	24 VDC	Grommet
B	100 VAC	Grommet (With surge voltage suppressor)
C	110 VAC	
D	200 VAC	
E	230 VAC	
F	24 VDC	
G	24 VDC	DIN terminal (With surge voltage suppressor)
H	100 VAC	
J	110 VAC	
K	200 VAC	
L	230 VAC	
M	24 VDC	Conduit terminal (With surge voltage suppressor)
N	100 VAC	
P	110 VAC	
Q	200 VAC	
R	230 VAC	
S	24 VDC	Conduit (With surge voltage suppressor)
T	100 VAC	
U	110 VAC	
V	200 VAC	
W	230 VAC	
Y	24 VDC	Flat terminal
Z1A	48 VAC	Grommet (With surge voltage suppressor)
Z1B	220 VAC	
Z1C	240 VAC	
Z1U	24 VAC	
Z1D	12 VDC	Grommet
Z1E	12 VDC	Grommet (With surge voltage suppressor)
Z1F	48 VAC	DIN terminal (With surge voltage suppressor)
Z1G	220 VAC	
Z1H	240 VAC	
Z1V	24 VAC	
Z1J	12 VDC	
Z1K	48 VAC	Conduit terminal (With surge voltage suppressor)
Z1L	220 VAC	
Z1M	240 VAC	
Z1W	24 VAC	
Z1N	12 VDC	

Symbol	Voltage	Electrical entry
Z1P	48 VAC	Conduit (With surge voltage suppressor)
Z1Q	220 VAC	
Z1R	240 VAC	
Z1Y	24 VAC	
Z1S	12 VDC	
Z1T	12 VDC	Flat terminal
Z2A	24 VDC	DIN terminal (With surge voltage suppressor, with light)
Z2B	100 VAC	
Z2C	110 VAC	
Z2D	200 VAC	
Z2E	230 VAC	
Z2F	48 VAC	
Z2G	220 VAC	
Z2H	240 VAC	
Z2V	24 VAC	
Z2J	12 VDC	
Z2K	24 VDC	Conduit terminal (With surge voltage suppressor, with light)
Z2L	100 VAC	
Z2M	110 VAC	
Z2N	200 VAC	
Z2P	230 VAC	
Z2Q	48 VAC	
Z2R	220 VAC	
Z2S	240 VAC	
Z2W	24 VAC	
Z2T	12 VDC	
Z3A	24 VDC	DIN terminal (With surge voltage suppressor, without DIN connector)
Z3B	100 VAC	
Z3C	110 VAC	
Z3D	200 VAC	
Z3E	230 VAC	
Z3F	48 VAC	
Z3G	220 VAC	
Z3H	240 VAC	
Z3V	24 VAC	
Z3J	12 VDC	

Bracket interchangeable with an old type

Size	Port size	Orifice diameter [mm Ø]	Bracket interchangeable with an old type
1	1/8, 1/4	2	○ (Interchangeable)
		3	○ (Interchangeable)
		5	○ (Interchangeable)
2	1/4, 3/8	4	○ (Interchangeable)
		7	○ (Interchangeable)
3	1/4, 3/8	5	○ (Interchangeable)
		8	× (Not interchangeable)*1
		10	× (Not interchangeable)*1
	1/2	10	—*1

*1 When the orifice is Ø 8, Ø 10, and when the body port size is 1/4 or 3/8, use a foot type bracket. (The old VX series is not compatible. If the body port size is 1/2, there are no XB settings (Refer to the following).
*2 On the bottom side of the standard body, there are no mounting holes. Please be careful because the bracket cannot be retrofit. (Please inquire separately regarding mounting holes on the bottom side of the body.)

Dimensions→ Pages 30, 31 (Single unit)

For Medium Vacuum (0.1 Pa·abs or more) Manifold

∗ For other fluids, please contact SMC.

Model/Valve Specifications

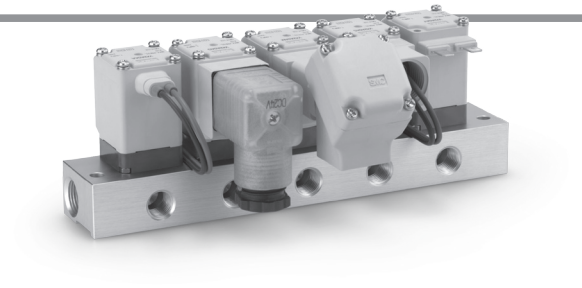

N.C.

Symbol

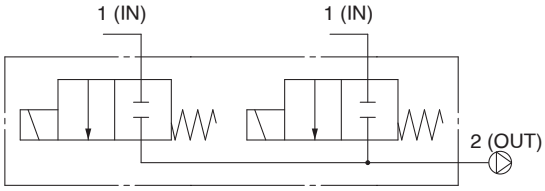

Individual SUP type

N.O.

Symbol

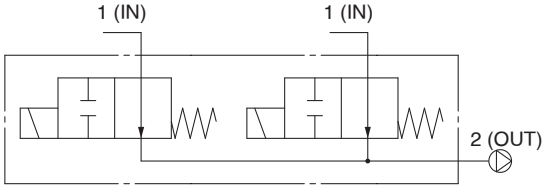

Individual SUP type

When the valve is closed, flow is blocked from port 1 to port 2.
However, if the pressure in port 2 is higher than port 1,
the valve will not be able to block the fluid and it will flow from port 2 to port 1.

Normally Closed (N.C.)

Size	Orifice diameter [mm Ø]	Model	Flow-rate characteristics			Maximum operating pressure differential [MPa]	Max. system pressure [MPa]
			C [dm³/(s·bar)]	b	Cv		
1	2	VX2A4	0.63	0.63	0.23	1.0	1.0
	3		1.05	0.68	0.41	0.6	
	5		2.20	0.39	0.62	0.2	
2	4	VX2B4	1.90	0.52	0.62	1.0	
	7		3.99	0.44	1.08	0.15	
3	5	VX2C4	1.96	0.55	0.75	1.0	
	7		3.99	0.44	1.08	0.3	

Normally Open (N.O.)

Size	Orifice diameter [mm Ø]	Model	Flow-rate characteristics			Maximum operating pressure differential [MPa]	Max. system pressure [MPa]
			C [dm³/(s·bar)]	b	Cv		
1	2	VX2D4	0.63	0.63	0.23	0.9	1.0
	3		1.05	0.68	0.41	0.45	
	5		2.20	0.39	0.62	0.2	
2	4	VX2E4	1.90	0.52	0.62	0.8	
	7		3.99	0.44	1.08	0.15	
3	5	VX2F4	1.96	0.55	0.75	0.8	
	7		3.99	0.44	1.08	0.3	

Fluid and Ambient Temperature

Fluid temperature [°C]	Ambient temperature [°C]
1 to 60 Note)	–20 to 60

Note) With no freezing

Valve Leakage Rate

Internal Leakage

Seal material	Leakage rate Note)
FKM	10^{-6} Pa·m³/sec or less

External Leakage

Seal material	Leakage rate Note)
FKM	10^{-6} Pa·m³/sec or less

Note) Leakage (10^{-6} Pa·m³/sec) is the value at differential pressure 0.1 MPa and ambient temperature 20 °C.

How to Order (Solenoid Valve for Manifold)

VX2 A 4 A A

Fluid

4	Medium vacuum

Coil size/Valve type

Size	Symbol	Valve type
Size 1	A	N.C.
	D	N.O.
Size 2	B	N.C.
	E	N.O.
Size 3	C	N.C.
	F	N.O.

Body material/Orifice diameter

Symbol	Body material	Orifice diameter
A	Resin	2
B		3
C		5
A	Resin	4
B		7
A	Resin	5
B		7

Common Specifications

Seal material	FKM
Coil insulation type	Class B
Oil-free	
Non-leak	

Voltage/Electrical entry

Symbol	Voltage	Electrical entry
A	24 VDC	Grommet
B	100 VAC	Grommet (With surge voltage suppressor)
C	110 VAC	
D	200 VAC	
E	230 VAC	
F	24 VDC	
G	24 VDC	DIN terminal (With surge voltage suppressor)
H	100 VAC	
J	110 VAC	
K	200 VAC	
L	230 VAC	
M	24 VDC	Conduit terminal (With surge voltage suppressor)
N	100 VAC	
P	110 VAC	
Q	200 VAC	
R	230 VAC	
S	24 VDC	Conduit (With surge voltage suppressor)
T	100 VAC	
U	110 VAC	
V	200 VAC	
W	230 VAC	
Y	24 VDC	Flat terminal
Z	Other voltages	

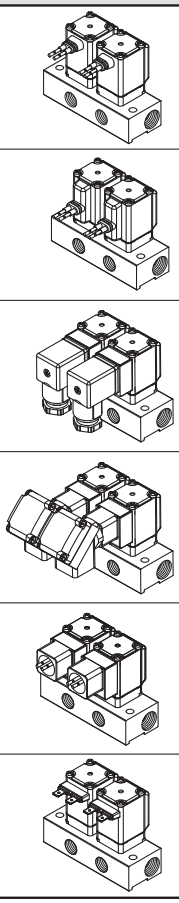

For special options, refer to pages XX to XX.

Special voltage	24 VAC
	48 VAC
	220 VAC
	240 VAC
	12 VDC
DIN terminal with light	
Conduit terminal with light	
Without DIN connector	
Seal material: EPDM	
Special electrical entry direction	

⚠Caution
Mounting orientation exists when mounting valves onto manifold base. Refer to page XX for details.

Manifold Base/How to Order

VVX2 1 4 A 02 ☐

Fluid

4	Medium vacuum

Coil size

Size	Symbol
Size 1	1
Size 2	2
Size 3	3

Base material/Port size/Base type

Symbol	Base material	Individual port size	Base type
A	Aluminum	1/8	Individual SUP
B		1/4	

Common port size: 3/8 (OUT port)

Stations

Symbol	Stations
02	2 stations
03	3 stations
04	4 stations
05	5 stations
06	6 stations
07	7 stations
08	8 stations
09	9 stations
10	10 stations

Symbol	Special thread
—	Rc
A	G*1
B	NPT

*1 For connection, prepare a fitting compliant with

Blanking Plate Assembly Part No.

For size 1 **VVX021S-4A-F**
For size 2 **VVX022S-4A-F**
For size 3 **VVX023S-4A-F**

Dimensions → Page 33

How to Order Manifold Assembly (Example)

Enter the valve and blanking plate to be mounted under the manifold base part number.

<Example>

VVX214B05.....1
***VX2A4AA 4**
***VVX021S-4A-F 1**
"*" is the symbol for mounting.
Add an "*" in front of the part numbers for solenoid valves etc. to be mounted.

D side — Stations 1 — 2 — 3 — 4 — 5 — U side

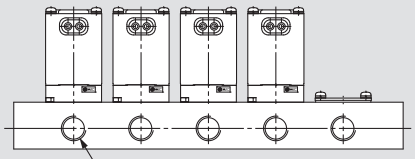

Enter the product's part number in order, counting the 1st station from the D side (left in the manifold arrangement, when viewing the individual port in front).

For Water Single Unit

∗ This valve can also be used with air.
(Refer to the valve specifications for air.)

Model/Valve Specifications

Symbol

N.C.

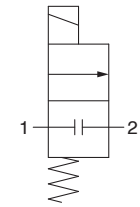

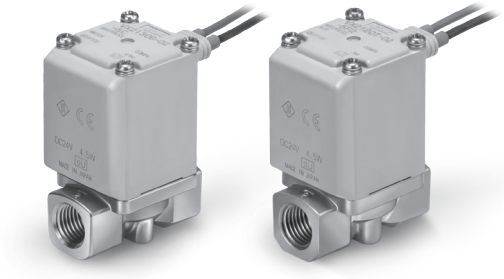

When the valve is closed, flow is blocked from port 1 to port 2.
However, if the pressure in port 2 is higher than port 1, the valve will not be able to block the fluid and it will flow from port 2 to port 1.

Symbol

N.O.

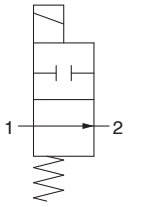

When the valve is closed, flow is blocked from port 1 to port 2.
However, if the pressure in port 2 is higher than port 1, the valve will not be able to block the fluid and it will flow from port 2 to port 1.

Normally Closed (N.C.)

Size	Port size	Orifice diameter [mm Ø]	Model	Flow-rate characteristics		Maximum operating pressure differential [MPa]	Max. system pressure [MPa]	Weight Note) [g]
				AV (x 10^{-6} m^2)	Conversion Cv			
1	1/8, 1/4	2	VX212	5.5	0.23	1	1.0	300
		3		10.0	0.42	0.6		300
		5		15.0	0.63	0.2		300
2	1/4, 3/8	4	VX222	15.0	0.63	1		460
		7		26.0	1.08	0.15		460
3	1/4, 3/8	5	VX232	18.0	0.75	1		580
		8		38.0	1.58	0.3		580
		10		53.0	2.21	0.1		580
	1/2	10		53.0	2.21	0.1		630

Normally Open (N.O.)

Size	Port size	Orifice diameter [mm Ø]	Model	Flow-rate characteristics		Maximum operating pressure differential [MPa]	Max. system pressure [MPa]	Weight Note) [g]
				AV (x 10^{-6} m^2)	Conversion Cv			
1	1/8, 1/4	2	VX242	5.5	0.23	0.9	1.0	320
		3		10.0	0.42	0.45		320
		5		15.0	0.63	0.2		320
2	1/4, 3/8	4	VX252	15.0	0.63	0.8		490
		7		26.0	1.08	0.15		490
3	1/4, 3/8	5	VX262	18.0	0.75	0.8		620
		8		38.0	1.58	0.3		620

Note) Weight of grommet type. Add 10 g for conduit type, 30 g for DIN terminal type, 60 g for conduit terminal type respectively.
• Refer to “Glossary of Terms” on page 37 for details on the maximum operating pressure differential.

Fluid and Ambient Temperature

Fluid temperature [°C]	Ambient temperature [°C]
1 to 60 Note)	–20 to 60

Note) With no freezing

Valve Leakage Rate

Internal Leakage

Seal material Note 2)	Leakage rate (Water) Note 1)
NBR (FKM)	0.1 cm^3/min or less

External Leakage

Seal material Note 2)	Leakage rate (Water) Note 1)
NBR (FKM)	0.1 cm^3/min or less

Note 1) Leakage is the value at ambient temperature 20 °C.
Note 2) For seal material/FKM, refer to “Other Options”.

How to Order (Single Unit)

Note) Refer to the table on page 23 for UL-compliant.

RoHS

VX2 1 2 A A A ☐

Fluid

2	Water

Interchangeable with existing bracket

—	No
XB	Yes

Note) For more information, please see table below.

Coil size/Valve type

Size	Symbol	Valve type
Size 1	1	N.C.
	4	N.O.
Size 2	2	N.C.
	5	N.O.
Size 3	3	N.C.
	6	N.O.

Body material/Port size/Orifice diameter

Symbol	Body material	Port size	Orifice diameter
A	C37 (Brass)	1/8	2
B			3
C			5
D		1/4	2
E			3
F			5
H	Stainless steel	1/8	2
J			3
K			5
L		1/4	2
M			3
N			5
A	C37 (Brass)	1/4	4
B			7
D		3/8	4
E			7
H	Stainless steel	1/4	4
J			7
L		3/8	4
M			7
A	C37 (Brass)	1/4	5
B			8
C			10 (N.C. only)
D		3/8	5
E			8
F			10 (N.C. only)
G		1/2	10 (N.C. only)
H	Stainless steel	1/4	5
J			8
K			10 (N.C. only)
L		3/8	5
M			8
N			10 (N.C. only)
P		1/2	10 (N.C. only)

Other option

Symbol	Seal material *1	Oil-free	Port thread
—	NBR	—	Standard (Rc)
A	NBR	—	G
B			NPT
C	FKM	—	Standard (Rc)
D	NBR	○	G
E			NPT
F	FKM	—	G
G			NPT
H	FKM	○	Standard (Rc)
K			G
L			NPT
Z	NBR	○	Standard (Rc)

*1 For low concetration ozone resistant and deionised water select seal material FKM.

Voltage/Electrical entry (coil insulation type: Class B)

Symbol	Voltage	Electrical entry
A	24 VDC	Grommet
B	100 VAC	Grommet (With surge voltage suppressor)
C	110 VAC	
D	200 VAC	
E	230 VAC	
F	24 VDC	
G	24 VDC	DIN terminal (With surge voltage suppressor)
H	100 VAC	
J	110 VAC	
K	200 VAC	
L	230 VAC	
M	24 VDC	Conduit terminal (With surge voltage suppressor)
N	100 VAC	
P	110 VAC	
Q	200 VAC	
R	230 VAC	
S	24 VDC	Conduit (With surge voltage suppressor)
T	100 VAC	
U	110 VAC	
V	200 VAC	
W	230 VAC	
Y	24 VDC	Flat terminal
Z1A	48 VAC	Grommet (With surge voltage suppressor)
Z1B	220 VAC	
Z1C	240 VAC	
Z1U	24 VAC	
Z1D	12 VDC	Grommet
Z1E	12 VDC	Grommet (With surge voltage suppressor)
Z1F	48 VAC	DIN terminal (With surge voltage suppressor)
Z1G	220 VAC	
Z1H	240 VAC	
Z1V	24 VAC	
Z1J	12 VDC	
Z1K	48 VAC	Conduit terminal (With surge voltage suppressor)
Z1L	220 VAC	
Z1M	240 VAC	
Z1W	24 VAC	
Z1N	12 VDC	

Symbol	Voltage	Electrical entry
Z1P	48 VAC	Conduit (With surge voltage suppressor)
Z1Q	220 VAC	
Z1R	240 VAC	
Z1Y	24 VAC	
Z1S	12 VDC	
Z1T	12 VDC	Flat terminal
Z2A	24 VDC	DIN terminal (With surge voltage suppressor, with light)
Z2B	100 VAC	
Z2C	110 VAC	
Z2D	200 VAC	
Z2E	230 VAC	
Z2F	48 VAC	
Z2G	220 VAC	
Z2H	240 VAC	
Z2V	24 VAC	
Z2J	12 VDC	
Z2K	24 VDC	Conduit terminal (With surge voltage suppressor, with light)
Z2L	100 VAC	
Z2M	110 VAC	
Z2N	200 VAC	
Z2P	230 VAC	
Z2Q	48 VAC	
Z2R	220 VAC	
Z2S	240 VAC	
Z2W	24 VAC	
Z2T	12 VDC	
Z3A	24 VDC	DIN terminal (With surge voltage suppressor, without DIN connector)
Z3B	100 VAC	
Z3C	110 VAC	
Z3D	200 VAC	
Z3E	230 VAC	
Z3F	48 VAC	
Z3G	220 VAC	
Z3H	240 VAC	
Z3V	24 VAC	
Z3J	12 VDC	

Dimensions→Pages 30, 31 (Single unit)

Bracket interchangeable with an old type

Size	Port size	Orifice diameter [mm Ø]	Bracket interchangeable with an old type
1	1/8, 1/4	2	○ (Interchangeable)
		3	○ (Interchangeable)
		5	○ (Interchangeable)
2	1/4, 3/8	4	○ (Interchangeable)
		7	○ (Interchangeable)
3	1/4, 3/8	5	○ (Interchangeable)
		8	× (Not interchangeable)*1
		10	× (Not interchangeable)*1
	1/2	10	—*1

*1 When the orifice is Ø 8, Ø 10, and when the body port size is 1/4 or 3/8, use a foot type bracket. (The old VX series is not compatible. If the body port size is 1/2, there are no XB settings (Refer to the following).

*2 On the bottom side of the standard body, there are no mounting holes. Please be careful because the bracket cannot be retrofit. (Please inquire separately regarding mounting holes on the bottom side of the body.)

For Oil Single Unit

* This valve can also be used with air or water.
(Refer to the valve specifications for air or water.)

⚠When the fluid is oil.

The kinematic viscosity must not exceed 50 mm²/s.
The special construction of the armature adopted in the built-in full-wave rectifier type gives an improvement in OFF response by providing clearance on the absorbed surface when it is switched ON.

Model/Valve Specifications

Symbol

N.C.

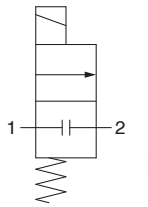

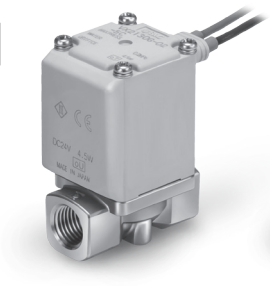

When the valve is closed, flow is blocked from port 1 to port 2. However, if the pressure in port 2 is higher than port 1, the valve will not be able to block the fluid and it will flow from port 2 to port 1.

Symbol

N.O.

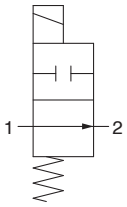

When the valve is closed, flow is blocked from port 1 to port 2. However, if the pressure in port 2 is higher than port 1, the valve will not be able to block the fluid and it will flow from port 2 to port 1.

Normally Closed (N.C.)

Size	Port size	Orifice diameter [mmØ]	Model	Flow-rate characteristics		Maximum operating pressure differential [MPa]	Max. system pressure [MPa]	Weight [g] Note)
				AV (x 10^{-6}m²)	Conversion Cv			
1	1/8, 1/4	2	VX213	5.5	0.23	1	1.0	300
		3		10.0	0.42	0.6		300
		5		15.0	0.63	0.2		300
2	1/4, 3/8	4	VX223	15.0	0.63	1		460
		7		26.0	1.08	0.15		460
3	1/4, 3/8	5	VX233	18.0	0.75	1		580
		8		38.0	1.58	0.3		580
		10		53.0	2.21	0.1		580
	1/2	10		53.0	2.21	0.1		630

Normally Open (N.O.)

Size	Port size	Orifice diameter [mmØ]	Model	Flow-rate characteristics		Maximum operating pressure differential [MPa]	Max. system pressure [MPa]	Weight [g] Note)
				AV (x 10^{-6}m²)	Conversion Cv			
1	1/8, 1/4	2	VX243	5.5	0.23	0.9	1.0	320
		3		10.0	0.42	0.45		320
		5		15.0	0.63	0.2		320
2	1/4, 3/8	4	VX253	15.0	0.63	0.8		490
		7		26.0	1.08	0.15		490
3	1/4, 3/8	5	VX263	18.0	0.75	0.8		620
		8		38.0	1.58	0.3		620

Note) Weight of grommet type. Add 10 g for conduit type, 30 g for DIN terminal type, 60 g for conduit terminal type respectively.
• Refer to “Glossary of Terms” on page 37 for details on the maximum operating pressure differential.

Fluid and Ambient Temperature

Fluid temperature [°C]	Ambient temperature [°C]
–5 Note) to 60	–20 to 60

Note) Kinematic viscosity: 50 mm²/s or less

Valve Leakage Rate

Internal Leakage

Seal material	Leakage rate (Oil) Note)
FKM	0.1 cm³/min or less

External Leakage

Seal material	Leakage rate (Oil) Note)
FKM	0.1 cm³/min or less

Note) Leakage is the value at ambient temperature 20 °C.

How to Order

VX2 [1] [3] [A] [A] [A] [ ]

Fluid

3	Oil

Common Specifications

Seal material	FKM

Coil size/Valve type

Size	Symbol	Valve type
Size 1	1	N.C.
	4	N.O.
Size 2	2	N.C.
	5	N.O.
Size 3	3	N.C.
	6	N.O.

Body material/Port size/Orifice diameter

Symbol	Body material	Port size	Orifice diameter
A	C37 (Brass)	1/8	2
B			3
C			5
D		1/4	2
E			3
F			5
H	Stainless steel	1/8	2
J			3
K			5
L		1/4	2
M			3
N			5
A	C37 (Brass)	1/4	4
B			7
D		3/8	4
E			7
H	Stainless steel	1/4	4
J			7
L		3/8	4
M			7
A	C37 (Brass)	1/4	5
B			8
C			10 (N.C. only)
D		3/8	5
E			8
F			10 (N.C. only)
G		1/2	10 (N.C. only)
H	Stainless steel	1/4	5
J			8
K			10 (N.C. only)
L		3/8	5
M			8
N			10 (N.C. only)
P		1/2	10 (N.C. only)

Interchangeable with existing bracket

—	No
XB	Yes

Note) For more information, please see table below.

Other option

Symbol	Oil-free	Port thread
—	—	Standard (Rc)
A		G
B		NPT
D	○	G
E		NPT
Z		Standard (Rc)

Voltage/Electrical entry (coil insulation type: Class B)

Symbol	Voltage	Electrical entry
A	24 VDC	Grommet
B	100 VAC	Grommet (With surge voltage suppressor)
C	110 VAC	
D	200 VAC	
E	230 VAC	
F	24 VDC	
G	24 VDC	DIN terminal (With surge voltage suppressor)
H	100 VAC	
J	110 VAC	
K	200 VAC	
L	230 VAC	
M	24 VDC	Conduit terminal (With surge voltage suppressor)
N	100 VAC	
P	110 VAC	
Q	200 VAC	
R	230 VAC	
S	24 VDC	Conduit (With surge voltage suppressor)
T	100 VAC	
U	110 VAC	
V	200 VAC	
W	230 VAC	
Y	24 VDC	Flat terminal
Z1A	48 VAC	Grommet (With surge voltage suppressor)
Z1B	220 VAC	
Z1C	240 VAC	
Z1U	24 VAC	
Z1D	12 VDC	Grommet
Z1E	12 VDC	Grommet (With surge voltage suppressor)
Z1F	48 VAC	DIN terminal (With surge voltage suppressor)
Z1G	220 VAC	
Z1H	240 VAC	
Z1V	24 VAC	
Z1J	12 VDC	
Z1K	48 VAC	Conduit terminal (With surge voltage suppressor)
Z1L	220 VAC	
Z1M	240 VAC	
Z1W	24 VAC	
Z1N	12 VDC	

Symbol	Voltage	Electrical entry
Z1P	48 VAC	Conduit (With surge voltage suppressor)
Z1Q	220 VAC	
Z1R	240 VAC	
Z1Y	24 VAC	
Z1S	12 VDC	
Z1T	12 VDC	Flat terminal
Z2A	24 VDC	DIN terminal (With surge voltage suppressor, with light)
Z2B	100 VAC	
Z2C	110 VAC	
Z2D	200 VAC	
Z2E	230 VAC	
Z2F	48 VAC	
Z2G	220 VAC	
Z2H	240 VAC	
Z2V	24 VAC	
Z2J	12 VDC	
Z2K	24 VDC	Conduit terminal (With surge voltage suppressor, with light)
Z2L	100 VAC	
Z2M	110 VAC	
Z2N	200 VAC	
Z2P	230 VAC	
Z2Q	48 VAC	
Z2R	220 VAC	
Z2S	240 VAC	
Z2W	24 VAC	
Z2T	12 VDC	
Z3A	24 VDC	DIN terminal (With surge voltage suppressor, without DIN connector)
Z3B	100 VAC	
Z3C	110 VAC	
Z3D	200 VAC	
Z3E	230 VAC	
Z3F	48 VAC	
Z3G	220 VAC	
Z3H	240 VAC	
Z3V	24 VAC	
Z3J	12 VDC	

Bracket interchangeable with an old type

Size	Port size	Orifice diameter [mmØ]	Bracket interchangeable with an old type
1	1/8, 1/4	2	○ (Interchangeable)
		3	○ (Interchangeable)
		5	○ (Interchangeable)
2	1/4, 3/8	4	○ (Interchangeable)
		7	○ (Interchangeable)
3	1/4, 3/8	5	○ (Interchangeable)
		8	× (Not interchangeable)*1
		10	× (Not interchangeable)*1
	1/2	10	—*1

*1 When the orifice is Ø 8, Ø 10, and when the body port size is 1/4 or 3/8, use a foot type bracket. (The old VX series is not compatible. If the body port size is 1/2, there are no XB settings (Refer to the following).

*2 On the bottom side of the standard body, there are no mounting holes. Please be careful because the bracket cannot be retrofit. (Please inquire separately regarding mounting holes on the bottom side of the body.)

Dimensions → Pages 30, 31 (Single unit)

For Steam Single Unit

∗ This valve can also be used with air, water, oil or heated water.
(Refer to the valve specifications for air, water or oil.)

Model/Valve Specifications

Symbol

N.C.

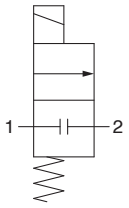

Symbol

N.O.

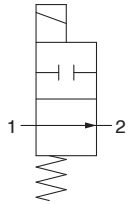

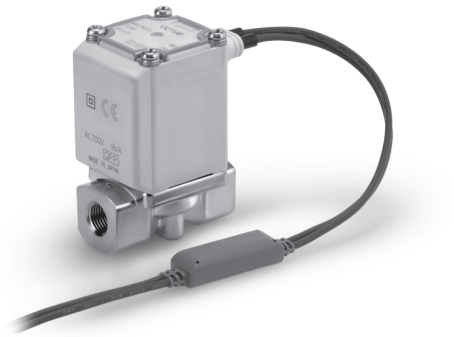

When the valve is closed, flow is blocked from port 1 to port 2.
However, if the pressure in port 2 is higher than port 1,
the valve will not be able to block the fluid and it will flow from port 2 to port 1.

Normally Closed (N.C.)

Size	Port size	Orifice diameter [mmØ]	Model	Flow-rate characteristics		Maximum operating pressure differential [MPa]	Max. system pressure [MPa]	Weight Note) [g]
				AV (x 10^{-6} m^2)	Conversion Cv			
1	1/8, 1/4	2	VX215	5.5	0.23	1	1.0	300
		3		10.0	0.42	0.6		300
		5		15.0	0.63	0.2		300
2	1/4, 3/8	4	VX225	15.0	0.63	1		460
		7		26.0	1.08	0.15		460
3	1/4, 3/8	5	VX235	18.0	0.75	1		580
		8		38.0	1.58	0.3		580
		10		53.0	2.21	0.1		580
	1/2	10		53.0	2.21	0.1		630

Normally Open (N.O.)

Size	Port size	Orifice diameter [mmØ]	Model	Flow-rate characteristics		Maximum operating pressure differential [MPa]	Max. system pressure [MPa]	Weight Note) [g]
				AV (x 10^{-6} m^2)	Conversion Cv			
1	1/8, 1/4	2	VX245	5.5	0.23	0.9	1.0	320
		3		10.0	0.42	0.45		320
		5		15.0	0.63	0.2		320
2	1/4, 3/8	4	VX255	15.0	0.63	0.8		490
		7		26.0	1.08	0.15		490
3	1/4, 3/8	5	VX265	18.0	0.75	0.8		620
		8		38.0	1.58	0.3		620

Note) Weight of grommet type. Add 10 g for conduit type, 60 g for conduit terminal type respectively.

Fluid and Ambient Temperature

Fluid temperature [°C]	Ambient temperature [°C]
Steam: 183 or less	–20 to 60
Heated water: 99 or less	

Valve Leakage Rate

Internal Leakage

Fluid	Seal material	Leakage rate
Steam	FKM for high temperature	1.0 cm^3/min or less
Heated water		0.1 cm^3/min or less

External Leakage

Fluid	Seal material	Leakage rate
Steam	FKM for high temperature	1.0 cm^3/min or less
Heated water		0.1 cm^3/min or less

How to Order (Single Unit)

VX2 1 5 A B A

Common Specifications

Seal material	FKM for high temperature

Fluid

5	Steam

∗ Can be used with heated water.

Interchangeable with existing bracket

—	No
XB	Yes

Note) For more information, please see table below.

Coil size/Valve type

Size	Symbol	Valve type
Size 1	1	N.C.
	4	N.O.
Size 2	2	N.C.
	5	N.O.
Size 3	3	N.C.
	6	N.O.

Body material/Port size/Orifice diameter

Symbol	Body material	Port size	Orifice diameter
A	C37 (Brass)	1/8	2
B			3
C			5
D		1/4	2
E			3
F			5
H	Stainless steel	1/8	2
J			3
K			5
L		1/4	2
M			3
N			5
A	C37 (Brass)	1/4	4
B			7
D		3/8	4
E			7
H	Stainless steel	1/4	4
J			7
L		3/8	4
M			7
A	C37 (Brass)	1/4	5
B			8
C			10 (Only N.C.)
D		3/8	5
E			8
F			10 (Only N.C.)
G		1/2	10 (Only N.C.)
H	Stainless steel	1/4	5
J			8
K			10 (Only N.C.)
L		3/8	5
M			8
N			10 (Only N.C.)
P		1/2	10 (Only N.C.)

Other option

Symbol	Oil-free	Port thread
—	—	Standard (Rc)
A		G
B		NPT
D	○	G
E		NPT
Z		Standard (Rc)

Voltage/Electrical entry (coil insulation type: Class H)

Symbol	Voltage	Electrical entry
A	24 VDC	Grommet
B	100 VAC	Grommet (With surge voltage suppressor)
C	110 VAC	
D	200 VAC	
E	230 VAC	
G	24 VDC	DIN terminal (With surge voltage suppressor) Note 1) 2)
H	100 VAC	
J	110 VAC	
K	200 VAC	
L	230 VAC	
N	100 VAC	Conduit terminal (With surge voltage suppressor)
P	110 VAC	
Q	200 VAC	
R	230 VAC	
T	100 VAC	Conduit (With surge voltage suppressor)
U	110 VAC	
V	200 VAC	
W	230 VAC	
Z1A	48 VAC	Grommet (With surge voltage suppressor)
Z1B	220 VAC	
Z1C	240 VAC	
Z1U	24 VAC	
Z1F	48 VAC	DIN terminal (With surge voltage suppressor) Note 1) 2)
Z1G	220 VAC	
Z1H	240 VAC	
Z1V	24 VAC	

Symbol	Voltage	Electrical entry
Z1K	48 VAC	Conduit terminal (With surge voltage suppressor)
Z1L	220 VAC	
Z1M	240 VAC	
Z1W	24 VAC	
Z1P	100 VAC	Conduit (With surge voltage suppressor)
Z1Q	110 VAC	
Z1R	200 VAC	
Z1Y	230 VAC	
Z2A	24 VDC	DIN terminal (With surge voltage suppressor, with light) Note 1) 2)
Z2B	100 VAC	
Z2C	110 VAC	
Z2D	200 VAC	
Z2E	230 VAC	
Z2F	48 VAC	
Z2G	220 VAC	
Z2H	240 VAC	
Z2V	24 VAC	
Z2L	100 VAC	Conduit terminal (With surge voltage suppressor, with light)
Z2M	110 VAC	
Z2N	200 VAC	
Z2P	230 VAC	
Z2Q	48 VAC	
Z2R	220 VAC	
Z2S	240 VAC	
Z2W	24 VAC	

Note 1) AC voltage coil for "H" of DIN terminal type does not have full-wave rectifier. Full-wave rectifier is built on the DIN connector side. Refer to page 34 to order it as an accessory.
Note 2) DIN connector insulation class is Class "B".
Note 3) Flat terminal is not available.

Bracket interchangeable with an old type

Size	Port size	Orifice diameter [mmØ]	Bracket interchangeable with an old type
1	1/8, 1/4	2	○ (Interchangeable)
		3	○ (Interchangeable)
		5	○ (Interchangeable)
2	1/4, 3/8	4	○ (Interchangeable)
		7	○ (Interchangeable)
3	1/4, 3/8	5	○ (Interchangeable)
		8	× (Not interchangeable)∗1
		10	× (Not interchangeable)∗1
	1/2	10	—∗1

∗1 When the orifice is Ø 8, Ø 10, and when the body port size is 1/4 or 3/8, use a foot type bracket. (The old VX series is not compatible. If the body port size is 1/2, there are no XB settings (Refer to the following).
∗2 On the bottom side of the standard body, there are no mounting holes. Please be careful because the bracket cannot be retrofit. (Please inquire separately regarding mounting holes on the bottom side of the body.)

Dimensions → Page 32 (Single unit)

Installation Options
(Mounting Option/Special Electrical Entry Direction)

The following shows combinations that can be selected using installation options.

Combinations

Symbol	Special electrical entry direction	With bracket	Mounting holes on the bottom side of the body	Seal material: EPDM
XC□	●	●		●
XB□	●	●		●
XNB□	●		●	●
X332□	●	●	●	●

Special Electrical Entry Direction

VX2□□□□XC A

Enter standard product number.

Special electrical entry direction

Symbol	Electrical entry direction: Single unit	Electrical entry direction: Manifold
A	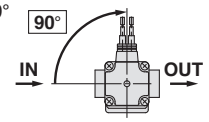	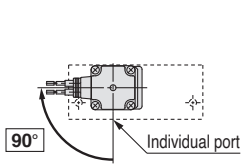
B	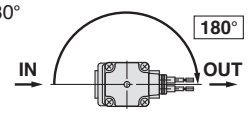	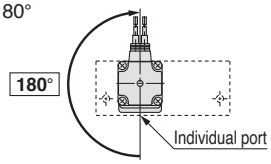
C	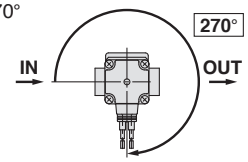	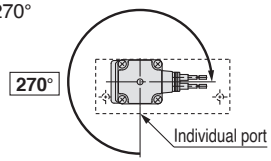

* Enter symbols in the order below when ordering a combination of electrical option, other option and special electrical entry direction.

Example) **VX2 1 2 A Z 1A Z XC A**

Electrical option ● **Other option** ● ● **Special electrical entry direction**

With Bracket/ Special Electrical Entry Direction

VX2□□□□XB A

Enter standard product number.

With bracket/Special electrical entry direction

Symbol	Electrical entry direction
—	Standard 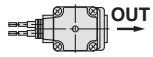
A	90° 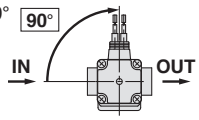
B	180° 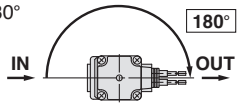
C	270° 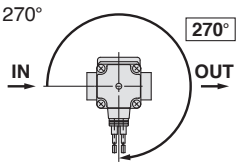

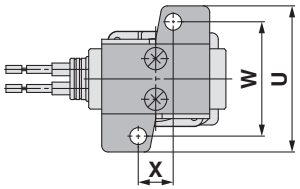

[mm]

Size	Port size	U	W	X
1	1/8, 1/4	46	36	11
2	1/4, 3/8	56	46	13
3	1/4, 3/8	56	46	13
	1/2	—	—	—

*1 Bracket is attached as standard with the resin body, so there are no XB settings.
*2 When the orifice is Ø 8, Ø 10, and the body port size is 1/4 or 3/8, use a foot type bracket. (The L-bracket of the old VX series is not compatible.) If the body port size is 1/2, there are no XB settings. (Refer to the following.)
*3 On the bottom side of the standard body, there is no female thread for mounting a bracket. Please be careful because the bracket cannot be retrofit.
*4 Bracket is packed in the same container as the main body.

Bracket Interchangeable with an Old Type

Size	Port size	Orifice diameter (mmØ)	Bracket interchangeable with an old type
1	1/8, 1/4	2	● (Interchangeable)
		3	● (Interchangeable)
		5	● (Interchangeable)
2	1/4, 3/8	4	● (Interchangeable)
		7	● (Interchangeable)
3	1/4, 3/8	5	● (Interchangeable)
		8	× (Not interchangeable)*2
		10	× (Not interchangeable)*2
	1/2	10	— (Not available)*2

* Enter symbols in the order below when ordering a combination of electrical option, other option and with bracket.

Example) **VX2 1 2 A Z 1A Z XB A**

Electrical option ● **Other option** ● ● **With bracket/Special electrical entry direction**

Installation Options
(Mounting Option/Special Electrical Entry Direction)

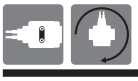

Mounting Holes on the Bottom Side of the Body/ Special Electrical Entry Direction

VX2□□□□XNB A

Enter standard product number.

Mounting holes on the bottom side of the body/ Special electrical entry direction

Symbol	Electrical entry direction	Symbol	Electrical entry direction
—	Standard (IN, OUT)	C	270° (IN, OUT, 270°)
A	90° (IN, OUT, 90°)		
B	180° (IN, OUT, 180°)		

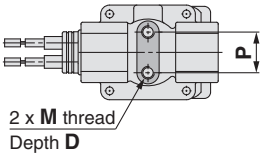

[mm]

Size	Port size	M	D	P
1	1/8, 1/4	M4	6	12.8
2	1/4, 3/8	M5	8	19
3	1/4, 3/8	M5	8	19
	1/2	M5	8	23

Note) Resin body is not available.

∗ Enter symbols in the order below when ordering a combination of electrical option, other option and mounting holes on the bottom side of the body.

Example) **VX2 1 2 A Z 1A Z XNB A**

- **Electrical option**
- **Other option**
- **Mounting holes on the bottom side of the body/ Special electrical entry direction**

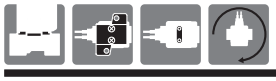

Seal Material: EPDM/With Bracket/ Mounting Holes on the Bottom Side of the Body/ Special Electrical Entry Direction

VX2□□□□X332 A

Enter standard product number.

Seal material: EPDM

When the fluid is oil, enter the part number for water (VX2□2).

∗ **VX2□3□□ → VX2□2□□**

Refer to page 15 for model selection.

With bracket/Mounting holes on the bottom side of the body/ Special electrical entry direction

Symbol	Specifications	
	Electrical entry direction	Bracket
—	IN side (Standard)	None
A	90°	
B	180°	
C	270°	
D	IN side (Standard)	With bracket∗1
E	90°	
F	180°	
G	270°	
H	IN side (Standard)	Mounting holes on the bottom side of the body∗1
J	90°	
K	180°	
L	270°	

∗1 Resin body is not available.
∗2 "Other Options", which can be combined, are A, B, D, E, Z.
∗3 Electrical entry direction

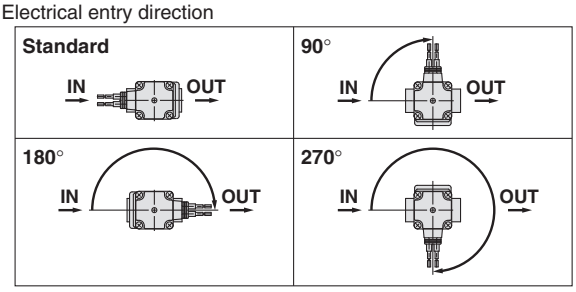

∗ Enter symbols in the order below when ordering a combination of electrical option, other option, seal material: EPDM, with bracket, mounting holes on the bottom side of the body and special electrical entry direction.

Example) **VX2 1 2 A Z 1A Z X332 A**

- **Electrical option**
- **Other option**
- **Seal material: EPDM/ With bracket/Mounting holes on the bottom side of the body/ Special electrical entry direction**

Series VX21/22/23
UL-compliant

∗ Refer to the table shown below for UL-compliant.

For Air

VX210 Valve type: N.C.

Size, Valve type, Fluid	Body material	Voltage, Electrical entry, Electrical options	Other options	With Note 1) bracket
VX210	A	A	—	—
	B	B	A	XB
	C	C	B	
	D	D	C	
	E	E	D	
	F	F	E	
	H Note 1)	M	F	
	J Note 1)	N	G	
	K Note 1)	P	H	
	L Note 1)	Q	K	
	M Note 1)	R	L	
	N Note 1)	S	Z	
		T		
		U		
		V		
		W		
		Y		
		Z1A		
		Z1B		
		Z1C		
		Z1U		
		Z1D		
		Z1E		
		Z1K		
		Z1L		
		Z1M		
		Z1W		
		Z1N		
		Z1P		
		Z1Q		
		Z1R		
		Z1Y		
		Z1S		
		Z1T		
		Z2K		
		Z2L		
		Z2M		
		Z2N		
		Z2P		
		Z2Q		
		Z2R		
		Z2S		
		Z2W		
		Z2T		
		Z3A		
		Z3B		
		Z3C		
		Z3D		
		Z3E		
		Z3F		
		Z3G		
		Z3H		
		Z3V		
		Z3J		

Note 1) Since the bracket is attached to the resin body type H, J, K, L, M, N, "XB" cannot be selected.

VX220 Valve type: N.C.

Size, Valve type, Fluid	Body material	Voltage, Electrical entry, Electrical options	Other options	With Note 1) bracket
VX220	A	A	—	—
	B	B	A	XB
	D	C	B	
	E	D	C	
	H Note 1)	E	D	
	J Note 1)	F	E	
	L Note 1)	M	F	
	M Note 1)	N	G	
		P	H	
		Q	K	
		R	L	
		S	Z	
		T		
		U		
		V		
		W		
		Y		
		Z1A		
		Z1B		
		Z1C		
		Z1U		
		Z1D		
		Z1E		
		Z1K		
		Z1L		
		Z1M		
		Z1W		
		Z1N		
		Z1P		
		Z1Q		
		Z1R		
		Z1Y		
		Z1S		
		Z1T		
		Z2K		
		Z2L		
		Z2M		
		Z2N		
		Z2P		
		Z2Q		
		Z2R		
		Z2S		
		Z2W		
		Z2T		
		Z3A		
		Z3B		
		Z3C		
		Z3D		
		Z3E		
		Z3F		
		Z3G		
		Z3H		
		Z3V		
		Z3J		

Note 1) Since the bracket is attached to the resin body type H, J, L, M, "XB" cannot be selected.

VX230 Valve type: N.C.

Size, Valve type, Fluid	Body material	Voltage, Electrical entry, Electrical options	Other options	With Note 1) bracket
VX230	A	A	—	—
	B	B	A	XB
	C	C	B	
	D	D	C	
	E	E	D	
	F	F	E	
	G	M	F	
	H Note 1)	N	G	
	J Note 1)	P	H	
	K Note 1)	Q	K	
	L Note 1)	R	L	
	M Note 1)	S	Z	
	N Note 1)	T		
		U		
		V		
		W		
		Y		
		Z1A		
		Z1B		
		Z1C		
		Z1U		
		Z1D		
		Z1E		
		Z1K		
		Z1L		
		Z1M		
		Z1W		
		Z1N		
		Z1P		
		Z1Q		
		Z1R		
		Z1Y		
		Z1S		
		Z1T		
		Z2K		
		Z2L		
		Z2M		
		Z2N		
		Z2P		
		Z2Q		
		Z2R		
		Z2S		
		Z2W		
		Z2T		
		Z3A		
		Z3B		
		Z3C		
		Z3D		
		Z3E		
		Z3F		
		Z3G		
		Z3H		
		Z3V		
		Z3J		

Note 1) Since the bracket is attached to the resin body type H, J, K, L, M, N, "XB" cannot be selected.
Note 2) For the body material type G, "XB" cannot be selected.

Refer to pages 20, 21 for electrical options, other options, and bracket/electrical entry direction.

For Water

VX212 Valve type: N.C.

Size, Valve type, Fluid	Body material	Voltage, Electrical entry, Electrical options	Other options	With bracket
VX212	A	A	—	—
	B	B	A	XB
	C	C	B	
	D	D	C	
	E	E	D	
	F	F	E	
	H	M	F	
	J	N	G	
	K	P	H	
	L	Q	K	
	M	R	L	
	N	S	Z	
		T		
		U		
		V		
		W		
		Y		
		Z1A		
		Z1B		
		Z1C		
		Z1U		
		Z1D		
		Z1E		
		Z1K		
		Z1L		
		Z1M		
		Z1W		
		Z1N		
		Z1P		
		Z1Q		
		Z1R		
		Z1Y		
		Z1S		
		Z1T		
		Z2K		
		Z2L		
		Z2M		
		Z2N		
		Z2P		
		Z2Q		
		Z2R		
		Z2S		
		Z2W		
		Z2T		
		Z3A		
		Z3B		
		Z3C		
		Z3D		
		Z3E		
		Z3F		
		Z3G		
		Z3H		
		Z3V		
		Z3J		

VX222 Valve type: N.C.

Size, Valve type, Fluid	Body material	Voltage, Electrical entry, Electrical options	Other options	With bracket
VX222	A	A	—	—
	B	B	A	XB
	D	C	B	
	E	D	C	
	H	E	D	
	J	F	E	
	L	M	F	
	M	N	G	
		P	H	
		Q	K	
		R	L	
		S	Z	
		T		
		U		
		V		
		W		
		Y		
		Z1A		
		Z1B		
		Z1C		
		Z1U		
		Z1D		
		Z1E		
		Z1K		
		Z1L		
		Z1M		
		Z1W		
		Z1N		
		Z1P		
		Z1Q		
		Z1R		
		Z1Y		
		Z1S		
		Z1T		
		Z2K		
		Z2L		
		Z2M		
		Z2N		
		Z2P		
		Z2Q		
		Z2R		
		Z2S		
		Z2W		
		Z2T		
		Z3A		
		Z3B		
		Z3C		
		Z3D		
		Z3E		
		Z3F		
		Z3G		
		Z3H		
		Z3V		
		Z3J		

VX232 Valve type: N.C.

Size, Valve type, Fluid	Body material	Voltage, Electrical entry, Electrical options	Other options	With bracket
VX232	A	A	—	—
	B	B	A	XB
	C	C	B	
	D	D	C	
	E	E	D	
	F	F	E	
	G Note 1)	M	F	
	H	N	G	
	J	P	H	
	K	Q	K	
	L	R	L	
	M	S	Z	
	N	T		
	P Note 1)	U		
		V		
		W		
		Y		
		Z1A		
		Z1B		
		Z1C		
		Z1U		
		Z1D		
		Z1E		
		Z1K		
		Z1L		
		Z1M		
		Z1W		
		Z1N		
		Z1P		
		Z1Q		
		Z1R		
		Z1Y		
		Z1S		
		Z1T		
		Z2K		
		Z2L		
		Z2M		
		Z2N		
		Z2P		
		Z2Q		
		Z2R		
		Z2S		
		Z2W		
		Z2T		
		Z3A		
		Z3B		
		Z3C		
		Z3D		
		Z3E		
		Z3F		
		Z3G		
		Z3H		
		Z3V		
		Z3J		

Note 1) For the body material type G, "XB" cannot be selected.

Refer to pages 20, 21 for electrical options, other options, and bracket/electrical entry direction.

Construction/Single Unit

Normally Closed (N.C.)

Body material: Aluminium, C37 (Brass), Stainless steel

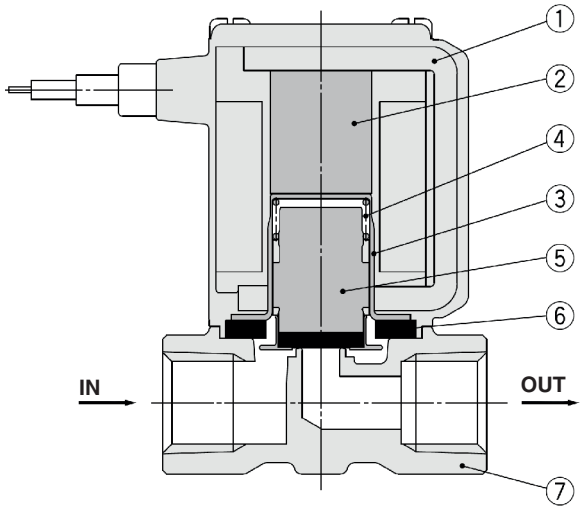

No.	Description	Material
1	**Solenoid coil**	Cu + Fe + Resin
2	**Core**	Fe
3	**Tube**	Stainless steel
4	**Spring**	Stainless steel
5	**Armature assembly**	NBR, FKM, Stainless steel, PPS
6	**Seal**	NBR, FKM
7	**Body**	Aluminium, C37 (Brass), Stainless steel

Body material: Resin

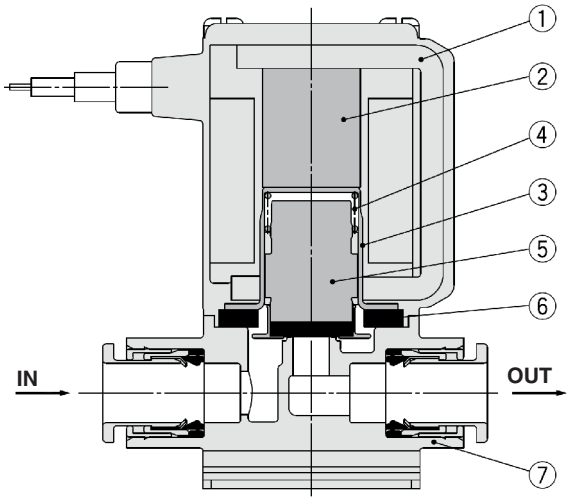

Component Parts

No.	Description	Material
1	**Solenoid coil**	Cu + Fe + Resin
2	**Core**	Fe
3	**Tube**	Stainless steel
4	**Spring**	Stainless steel
5	**Armature assembly**	NBR, FKM, Stainless steel, PPS
6	**Seal**	NBR, FKM
7	**Body**	Resin (PBT)

Normally Open (N.O.)

Body material: Aluminium, C37 (Brass), Stainless steel

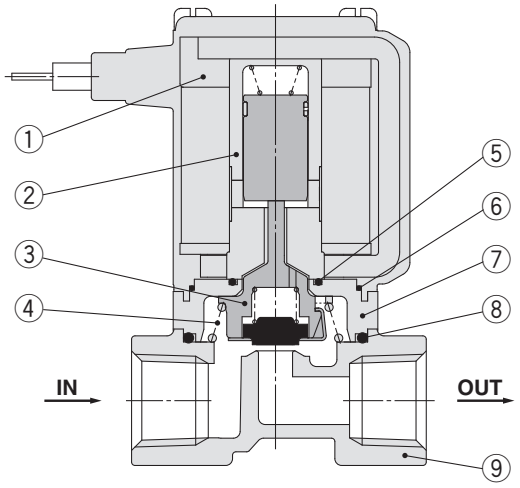

Component Parts

No.	Description	Material
1	**Solenoid coil**	Cu + Fe + Resin
2	**Sleeve assembly**	Stainless steel, Resin (PPS)
3	**Push rod assembly**	Resin (PPS), Stainless steel, NBR, FKM
4	**Spring**	Stainless steel
5	**O-ring A**	NBR, FKM
6	**O-ring B**	NBR, FKM
7	**Adapter**	Resin (PPS)
8	**O-ring C**	NBR, FKM
9	**Body**	Aluminium, C37 (Brass), Stainless steel

Body material: Resin

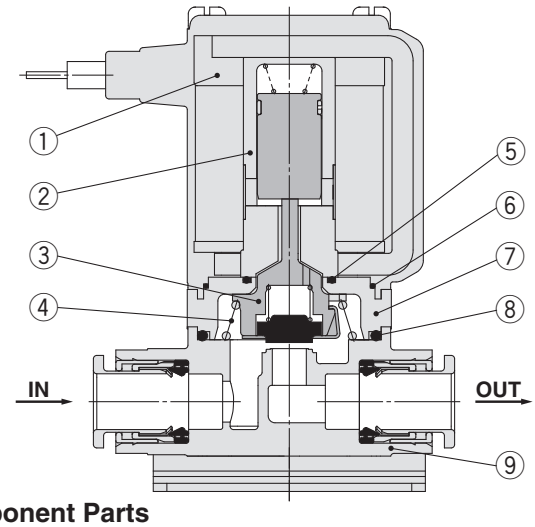

Component Parts

No.	Description	Material
1	**Solenoid coil**	Cu + Fe + Resin
2	**Sleeve assembly**	Stainless steel, Resin (PPS)
3	**Push rod assembly**	Resin (PPS), Stainless steel, NBR, FKM
4	**Spring**	Stainless steel
5	**O-ring A**	NBR, FKM
6	**O-ring B**	NBR, FKM
7	**Adapter**	Resin (PPS)
8	**O-ring C**	NBR, FKM
9	**Body**	Resin (PBT)

Construction/Manifold

Normally Closed (N.C.)

Base material: Aluminium

Common SUP type (for air)

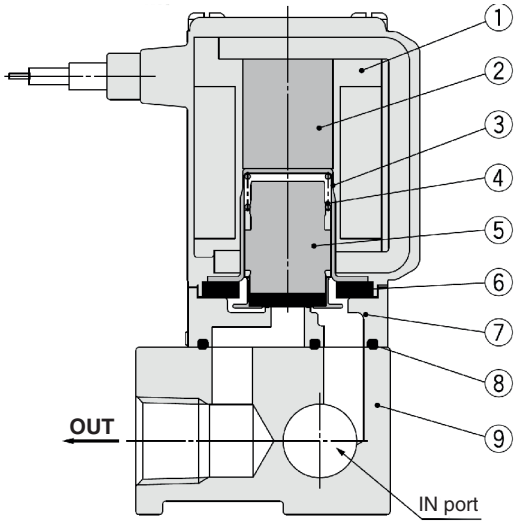

Individual SUP type (for medium vacuum)

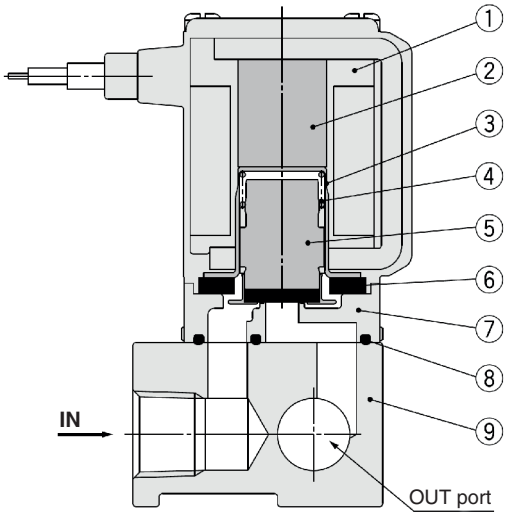

Component Parts

No.	Description	Material
1	**Solenoid coil**	Cu + Fe + Resin
2	**Core**	Fe
3	**Tube**	Stainless steel
4	**Spring**	Stainless steel
5	**Armature assembly**	NBR, FKM, Stainless steel, PPS
6	**Seal**	NBR, FKM
7	**Body**	Resin (PPS)
8	**Gasket**	NBR, FKM
9	**Base**	Aluminium

Normally Open (N.O.)

Base material: Aluminium

Common SUP type (for air)

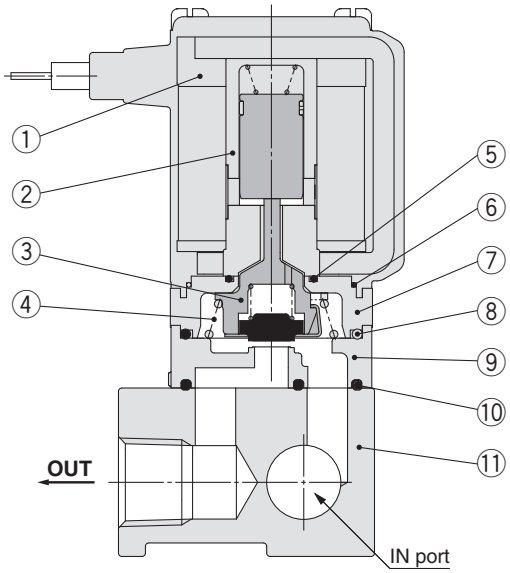

Individual SUP type (for medium vacuum)

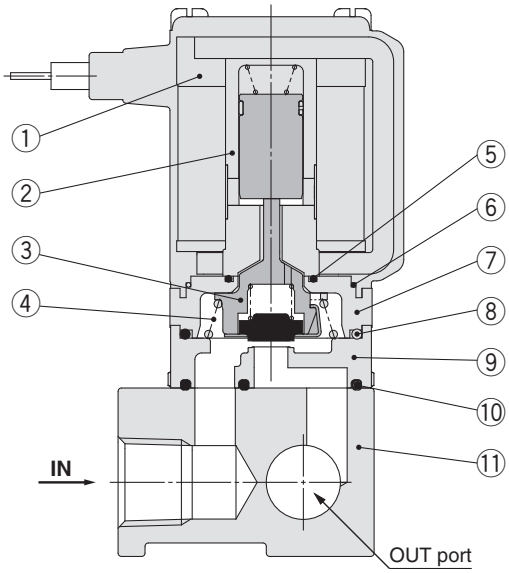

Component Parts

No.	Description	Material
1	**Solenoid coil**	Cu + Fe + Resin
2	**Sleeve assembly**	Stainless steel, Resin (PPS)
3	**Push rod assembly**	Resin (PPS), Stainless steel, NBR, FKM
4	**Spring**	Stainless steel
5	**O-ring A**	NBR, FKM
6	**O-ring B**	NBR, FKM

No.	Description	Material
7	**Adapter**	Resin (PPS)
8	**O-ring C**	NBR, FKM
9	**Body**	Resin (PPS)
10	**Gasket**	NBR, FKM
11	**Base**	Aluminium

For Air

Dimensions/Body Material: Aluminium

Grommet

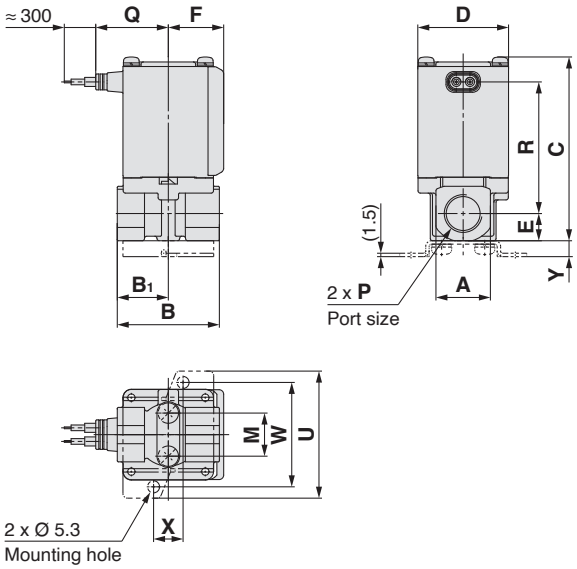

Grommet (with surge voltage suppressor)

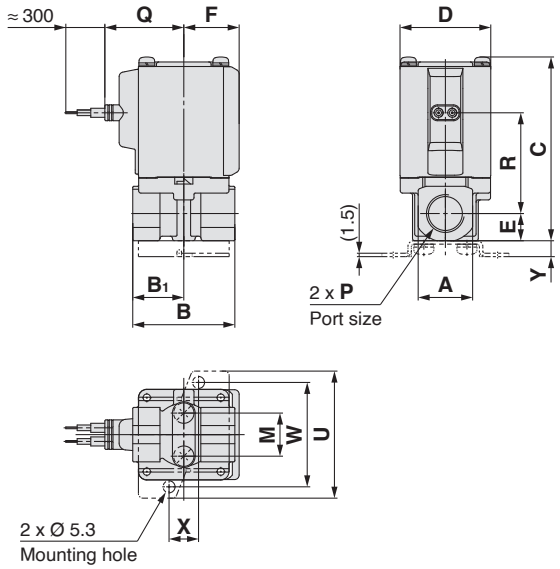

DIN terminal

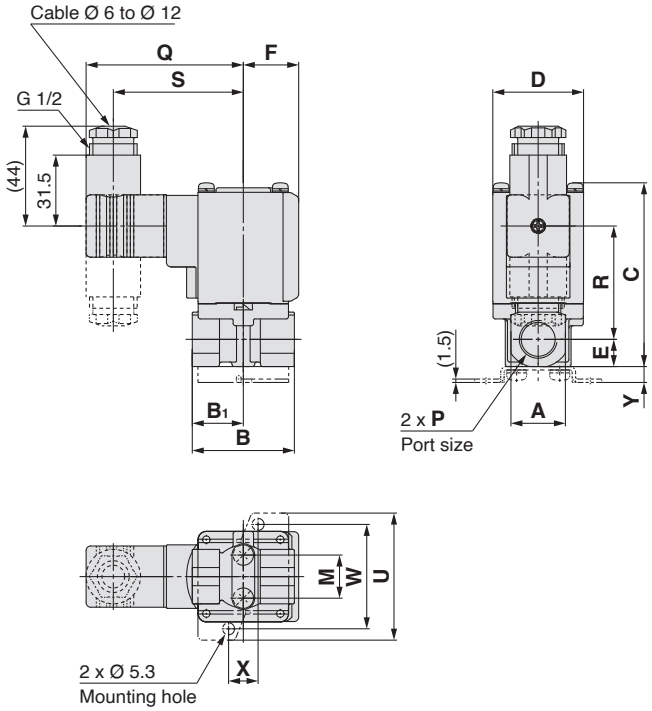

Conduit terminal

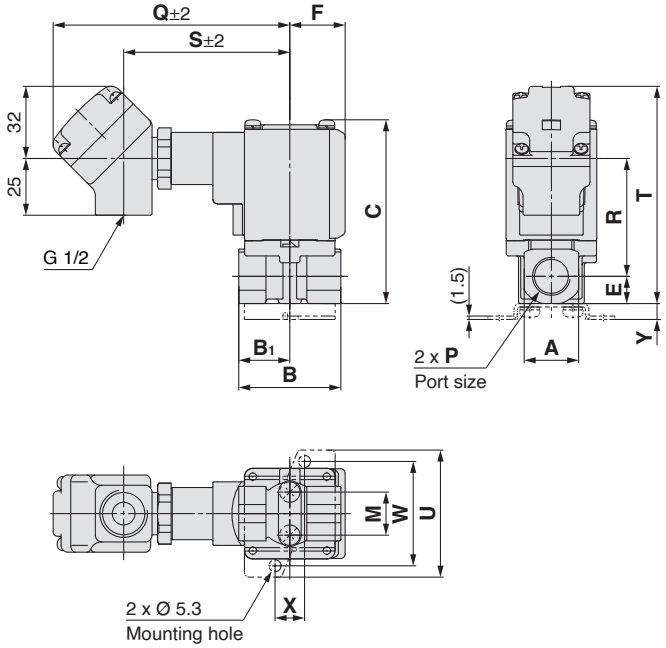

[mm]

Size	Port size P	A	B	B1	C	D	E	F	Mounting bracket dimensions				
									M	U	W	X	Y
1	1/8, 1/4	19	43	21	61 (67)	30	9.5	20	12.8	46	36	11	6
2	1/4, 3/8	24	45	22.5	76 (84)	35	12	22	19	56	46	13	7
3	1/4, 3/8	24	45	22.5	81 (89)	40	12	24.5	19	56	46	13	7
	1/2	30	50	25	86.5	40	15	24.5	—	—	—	—	—

Size	Port size P	Electrical entry										
		Grommet		Grommet (with surge voltage suppressor)		DIN terminal			Conduit terminal			
		Q	R	Q	R	Q	R	S	Q	R	S	T
1	1/8, 1/4	27	42 (47.5)	30	28.5 (34)	64.5	34 (39.5)	52.5	99.5	36 (41.5)	68.5	77 (83)
2	1/4, 3/8	29.5	53.5 (61.5)	32.5	39.5 (47.5)	67	45 (53)	55	102	47 (55)	71	91 (99)
3	1/4, 3/8	32	58 (66)	35	44.5 (52.5)	69.5	50 (58)	57.5	104.5	52 (60)	73.5	96 (104)
	1/2	32	61	35	47.5	69.5	53	57.5	104.5	55	73.5	101.5

( ): Denotes the Normally Open (N.O.) dimensions.

Dimensions/Body Material: Aluminium

Conduit

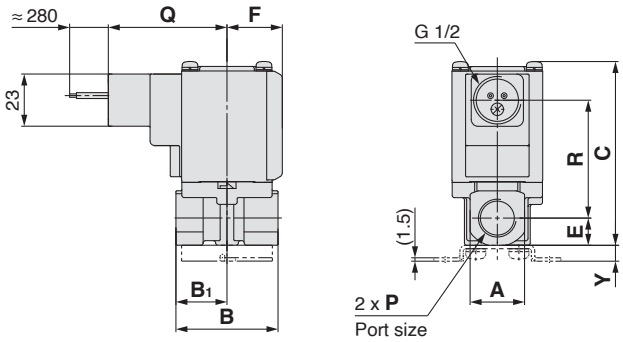

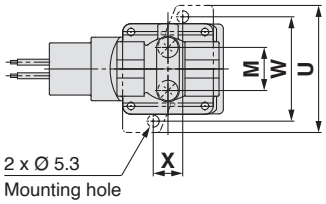

Flat terminal type

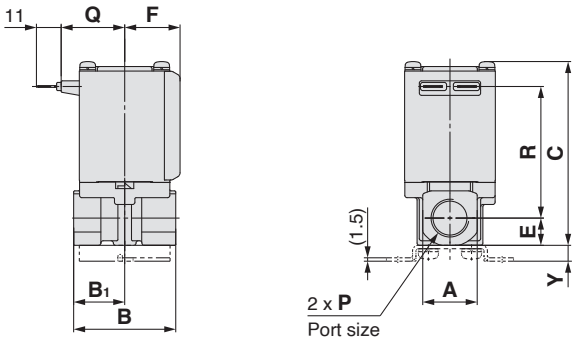

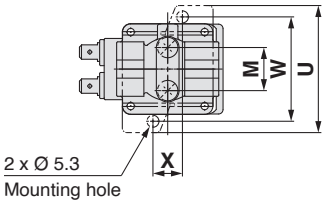

Terminal part

Flat terminal connector 250 Series

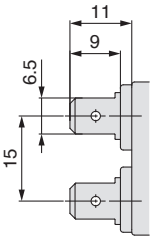

[mm]

Size	Port size P	A	B	B_1	C	D	E	F	Mounting bracket dimensions				
									M	U	W	X	Y
1	1/8, 1/4	19	43	21	61 (67)	30	9.5	20	12.8	46	36	11	6
2	1/4, 3/8	24	45	22.5	76 (84)	35	12	22	19	56	46	13	7
3	1/4, 3/8	24	45	22.5	81 (89)	40	12	24.5	19	56	46	13	7
	1/2	30	50	25	86.5	40	15	24.5	—	—	—	—	—

Size	Port size P	Electrical entry			
		Conduit		Flat terminal type	
		Q	R	Q	R
1	1/8, 1/4	47.5	36 (41.5)	23	42 (47.5)
2	1/4, 3/8	50	47 (55)	25.5	53.5 (61.5)
3	1/4, 3/8	52.5	52 (60)	28	58 (66)
	1/2	52.5	55	28	61

( ): Denotes the Normally Open (N.O.) dimensions.

For Air

Dimensions/Body Material: Resin

Grommet

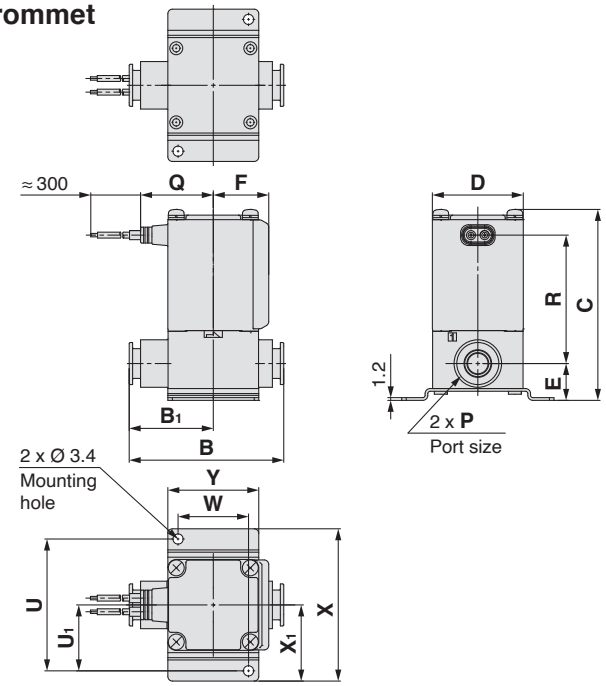

Grommet (with surge voltage suppressor)

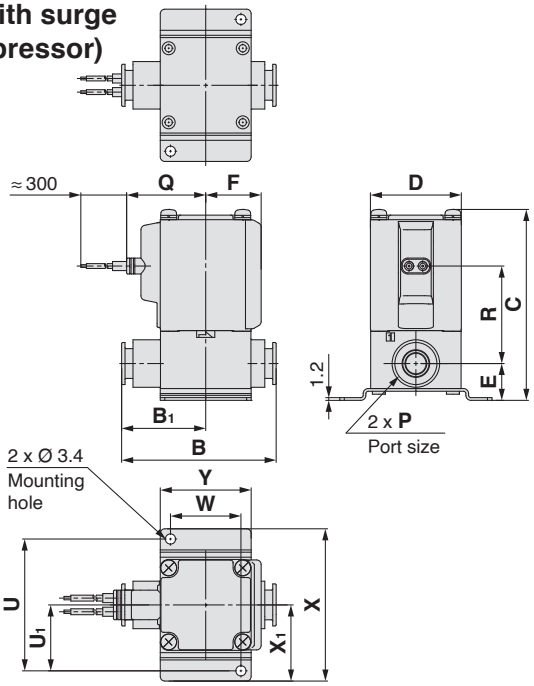

DIN terminal

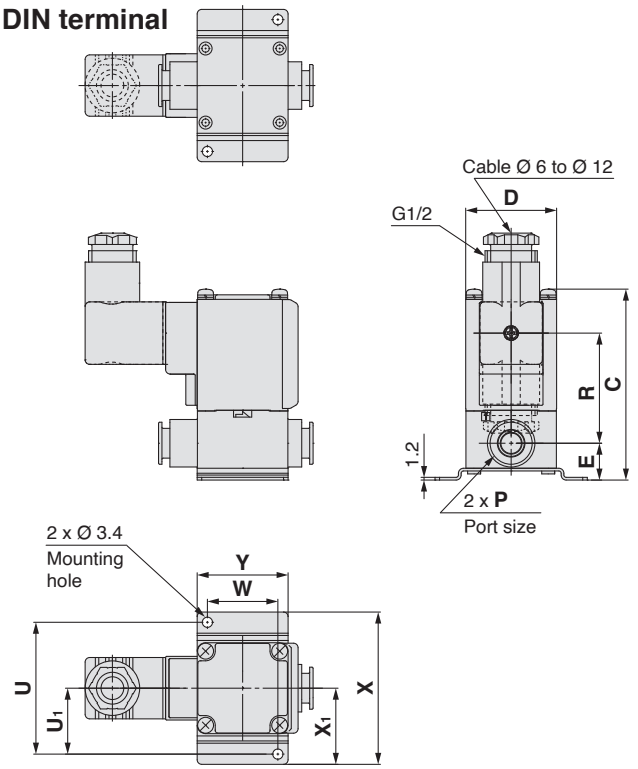

Conduit terminal

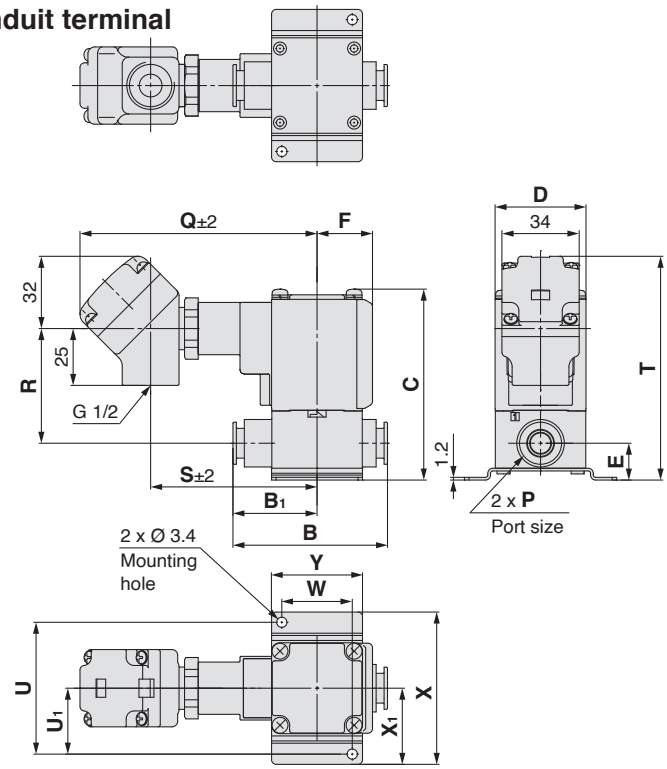

[mm]

Size	One-touch fitting P	B	B1	C	D	E	F	Mounting bracket dimensions					
								U	U1	W	X	X1	Y
1	Ø 6, Ø 8	53.5	29	65.5 (71.5)	30	13.5	20	45	22.5	22	52	26	30
2	Ø 8, Ø 10	66	36	76.5 (84.5)	35	15	22	53	26.5	27	62	31	35
3	Ø 10, Ø 12	68	37	84 (92)	40	16.5	24.5	58	29	31	67	33.5	40

Size	One-touch fitting P	Electrical entry										
		Grommet		Grommet (with surge voltage suppressor)		DIN terminal			Conduit terminal			
		Q	R	Q	R	Q	R	S	Q	R	S	T
1	Ø 6, Ø 8	27	42.5 (48)	30	29 (34.5)	64.5	34.5 (40)	52.5	99.5	36.5 (42)	68.5	81.5 (87)
2	Ø 8, Ø 10	29.5	51 (59)	32.5	37 (45)	67	43 (50.5)	55	102	45 (52.5)	71	91.5 (99.5)
3	Ø 10, Ø 12	32	56.5 (64.5)	35	43 (51)	69.5	48.5 (56.5)	57.5	104.5	50.5 (58.5)	73.5	98.5 (106.5)

( ): Denotes the Normally Open (N.O.) dimensions.

For information on handling one-touch fittings and appropriate tubing, refer to page 46 and KQ2 series one-touch fittings in KQ2´s catalogue.
The KQ2 series information can be downloaded from the following SMC website, http://www.smc.eu

Dimensions/Body Material: Resin

Conduit

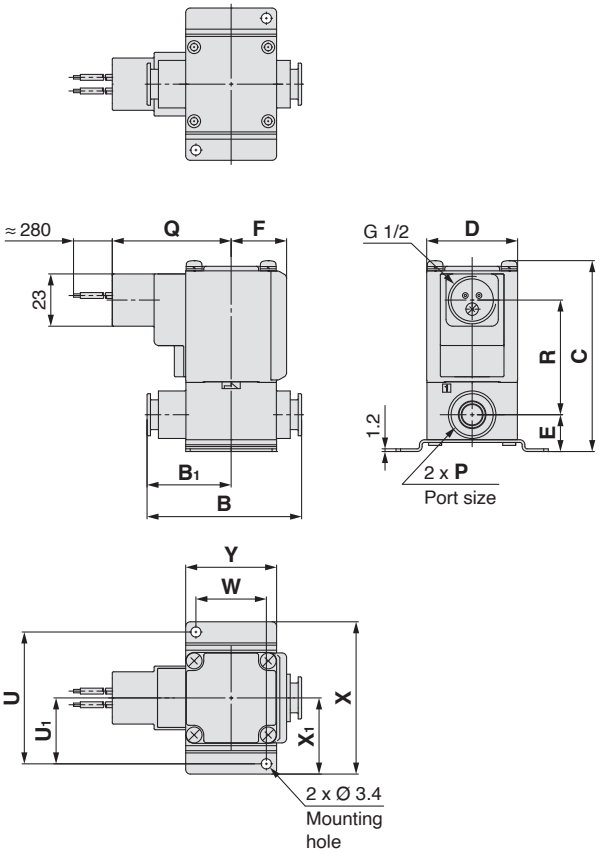

Flat terminal

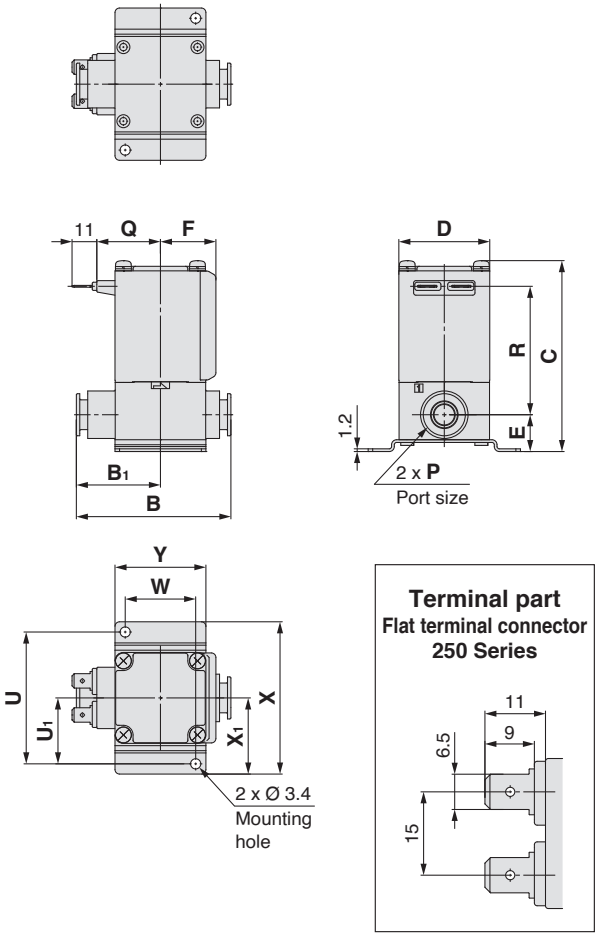

[mm]

Size	One-touch fitting **P**	B	B_1	C	D	E	F	Mounting bracket dimensions						Electrical entry			
														Conduit		Flat terminal	
								U	U_1	W	X	X_1	Y	Q	R	Q	R
1	Ø 6, Ø 8	53.5	29	65.5 (71.5)	30	13.5	20	45	22.5	22	52	26	30	47.5	36.5 (42)	23	42.5 (48)
2	Ø 8, Ø 10	66	36	76.5 (84.5)	35	15	22	53	26.5	27	62	31	35	50	45 (52.5)	25.5	51 (59)
3	Ø 10, Ø 12	68	37	84 (92)	40	16.5	24.5	58	29	31	67	33.5	40	52.5	50.5 (58.5)	28	56.5 (64.5)

( ): Denotes the Normally Open (N.O.) dimensions.

For Medium Vacuum, Water, Oil

Dimensions/Body Material: C37 (Brass), Stainless Steel

Grommet

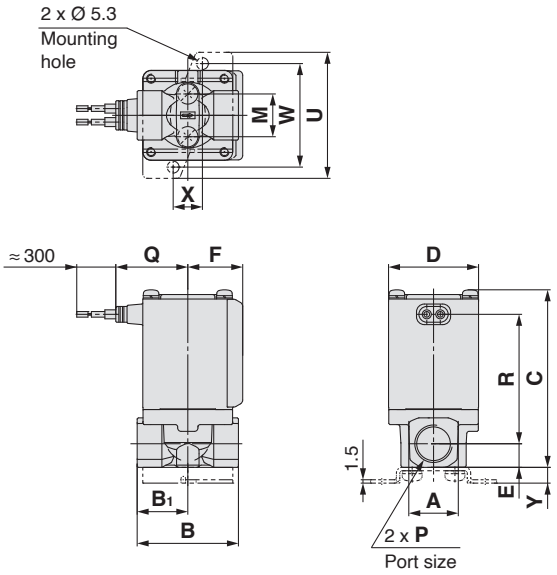

Grommet (with surge voltage suppressor)

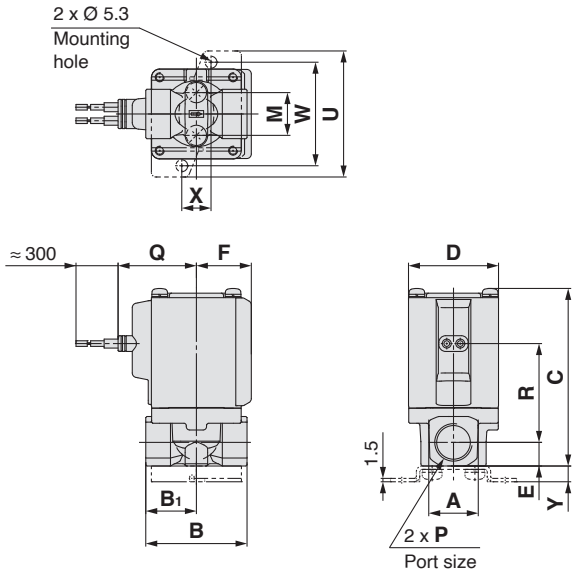

DIN terminal

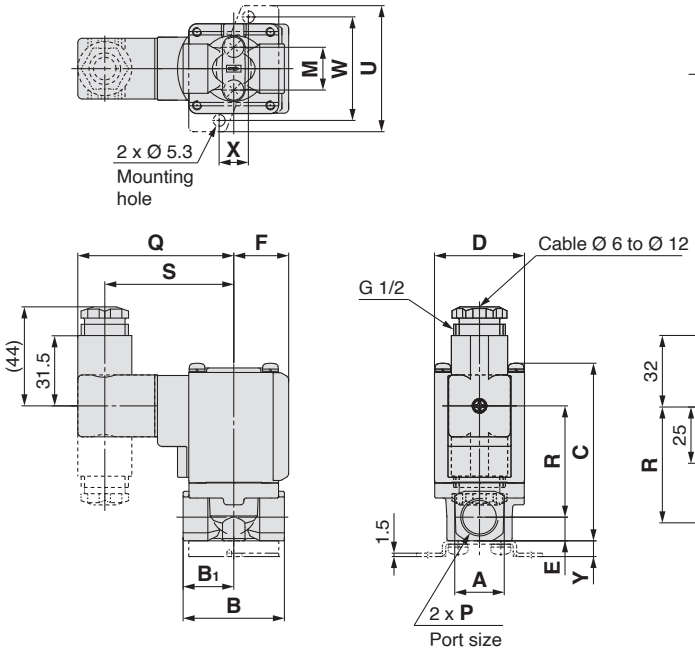

Conduit terminal

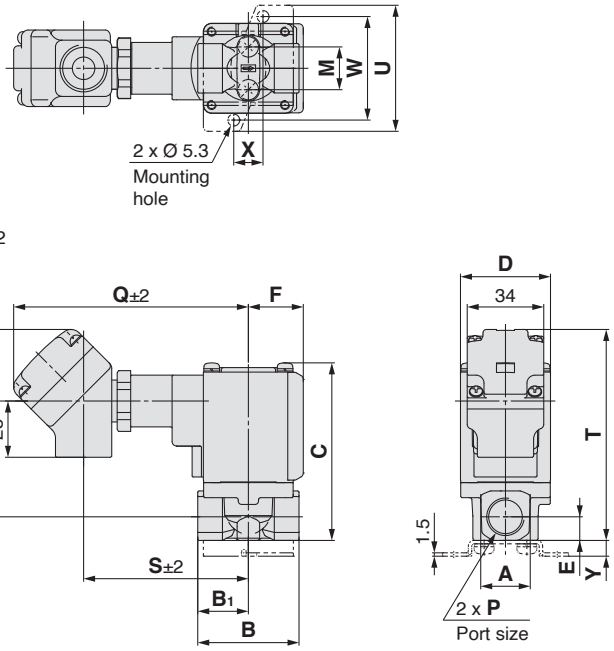

[mm]

Size	Port size P	A	B	B1	C	D	E	F	Mounting bracket dimensions				
									M	U	W	X	Y
1	1/8, 1/4	19	43	21	61 (67)	30	9.5	20	12.8	46	36	11	6
2	1/4, 3/8	22	45	22.5	74.5 (82.5)	35	10.5	22	19	56	46	13	7
3	1/4, 3/8	22	45	22.5	79 (87)	40	10.5	24.5	19	56	46	13	7
	1/2	29.5	50	25	85.5	40	14	24.5	—	—	—	—	—

Size	Port size P	Electrical entry										
		Grommet		Grommet (with surge voltage suppressor)		DIN terminal			Conduit terminal			
		Q	R	Q	R	Q	R	S	Q	R	S	T
1	1/8, 1/4	27	42 (47.5)	30	28.5 (34)	64.5	34 (39.5)	52.5	99.5	36 (41.5)	68.5	77 (83)
2	1/4, 3/8	29.5	53.5 (61.5)	32.5	39.5 (47.5)	67	45 (53)	55	102	47 (55)	71	89.5 (97.5)
3	1/4, 3/8	32	57.5 (65.5)	35	44 (52)	69.5	49.5 (57.5)	57.5	104.5	51.5 (59.5)	73.5	94 (102)
	1/2	32	61	35	47.5	69.5	53	57.5	104.5	55	73.5	100.5

( ): Denotes the Normally Open (N.O.) dimensions.

Dimensions/Body Material: C37 (Brass), Stainless Steel

Conduit

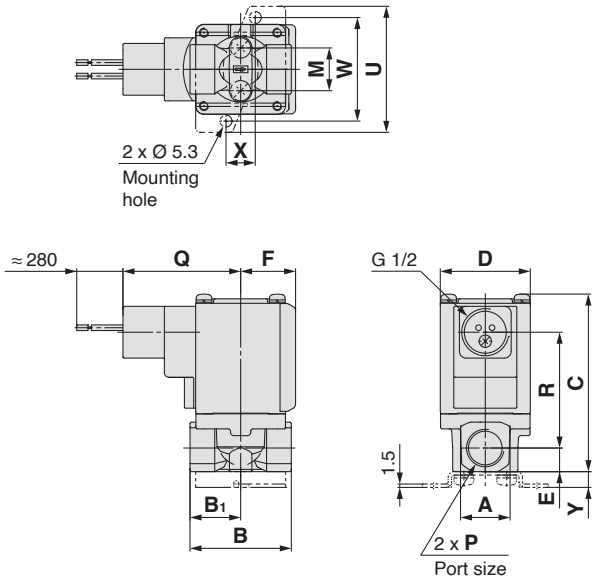

Flat terminal

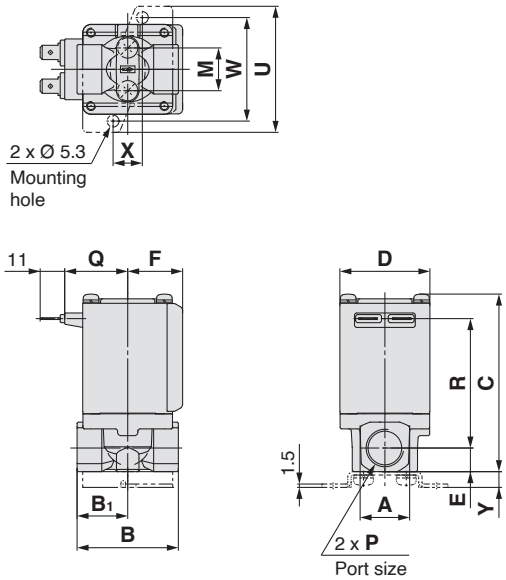

Terminal part
Flat terminal connector 250 Series

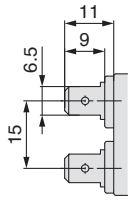

[mm]

Size	Port size P	A	B	B1	C	D	E	F	Mounting bracket dimensions				
									M	U	W	X	Y
1	1/8, 1/4	19	43	21	61 (67)	30	9.5	20	12.8	46	36	11	6
2	1/4, 3/8	22	45	22.5	74.5 (82.5)	35	10.5	22	19	56	46	13	7
3	1/4, 3/8	22	45	22.5	79 (87)	40	10.5	24.5	19	56	46	13	7
	1/2	29.5	50	25	85.5	40	14	24.5	—	—	—	—	—

Size	Port size P	Electrical entry			
		Conduit		Flat terminal	
		Q	R	Q	R
1	1/8, 1/4	47.5	36 (41.5)	23	42 (47.5)
2	1/4, 3/8	50	47 (55)	25.5	53.5 (61.5)
3	1/4, 3/8	52.5	51.5 (59.5)	28	57.5 (65.5)
	1/2	52.5	55	28	61

( ): Denotes the Normally Open (N.O.) dimensions.

For Steam
* Can be used with heated water.

Dimensions/Body Material: C37 (Brass), Stainless Steel

Grommet

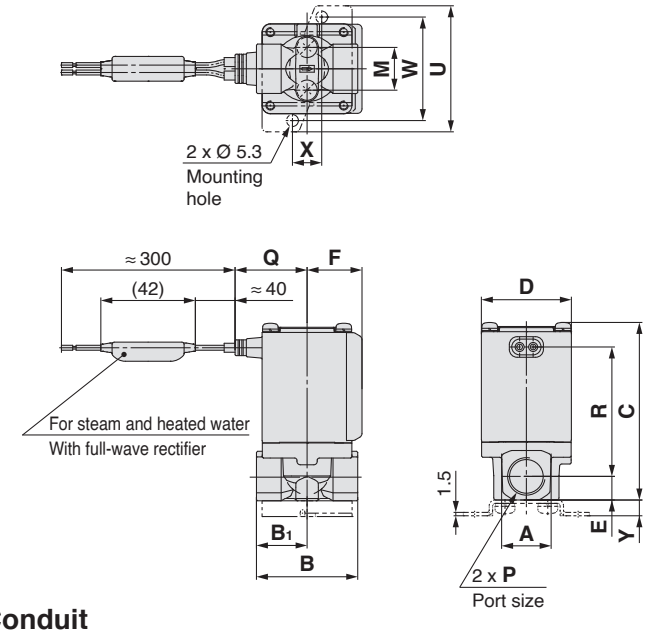

Conduit terminal

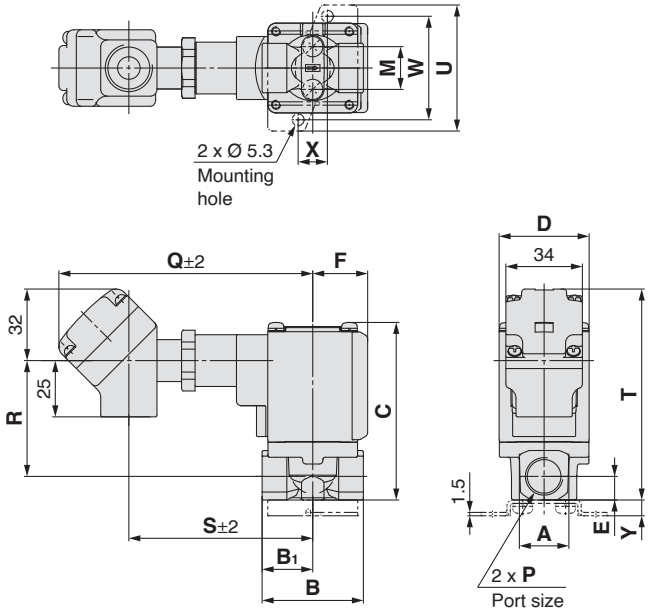

Conduit

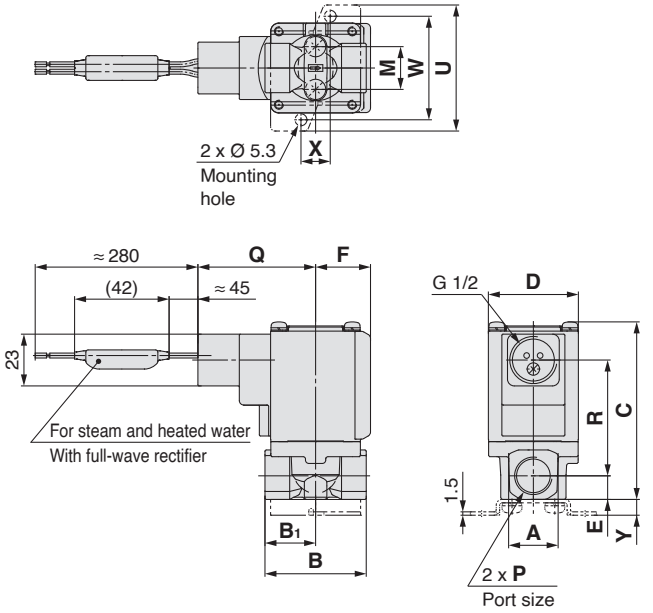

DIN terminal

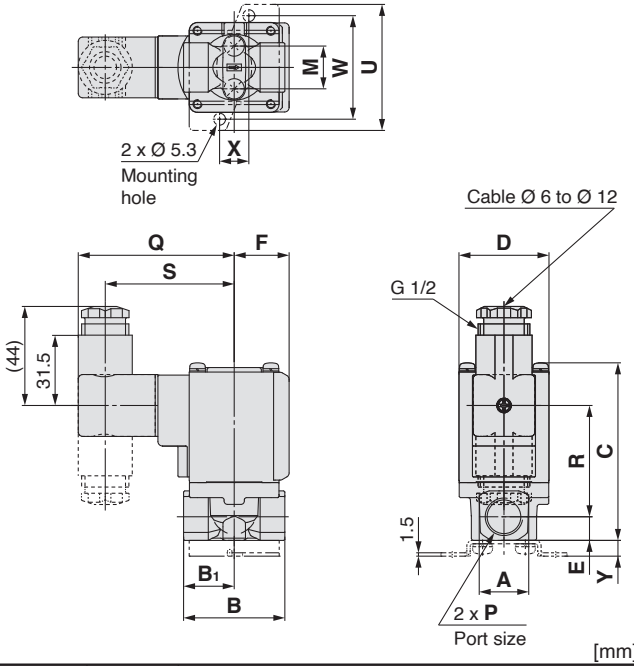

[mm]

Size	Port size P	A	B	B1	C	D	E	F	Mounting bracket dimensions				
									M	U	W	X	Y
1	1/8, 1/4	19	43	21	61 (67)	30	9.5	20	12.8	46	36	11	6
2	1/4, 3/8	22	45	22.5	74.5 (82.5)	35	10.5	22	19	56	46	13	7
3	1/4, 3/8	22	45	22.5	79 (87)	40	10.5	24.5	19	56	46	13	7
	1/2	29.5	50	25	85.5	40	14	24.5	—	—	—	—	—

Size	Port size P	Electrical entry										
		Grommet		Conduit terminal				Conduit		DIN terminal		
		Q	R	Q	R	S	T	Q	R	Q	R	S
1	1/8, 1/4	27	42 (47.5)	108	36 (41.5)	77	77 (83)	47.5	36 (41.5)	64.5	34 (39.5)	52.5
2	1/4, 3/8	29.5	53.5 (61.5)	110.5	47 (55)	79.5	89.5 (97.5)	50	47 (55)	67	45 (53)	55
3	1/4, 3/8	32	57.5 (65.5)	113	51.5 (59.5)	82	94 (102)	52.5	51.5 (59.5)	69.5	49.5 (57.5)	57.5
	1/2	32	61	113	55	82	100.5	52.5	55	69.5	53	57.5

( ): Denotes the Normally Open (N.O.) dimensions.
Flat terminal is not available for valves for steam and heated water.

Dimensions/Manifold/Base Material: Aluminium

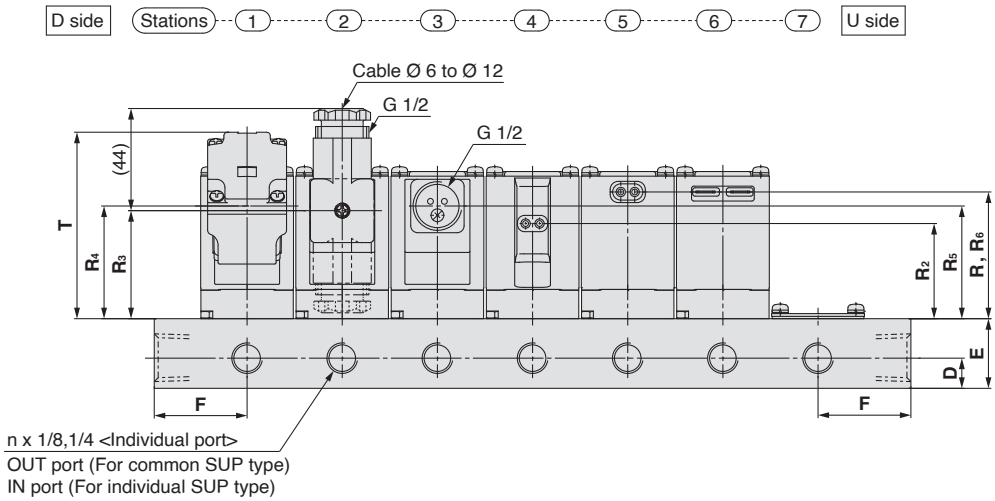

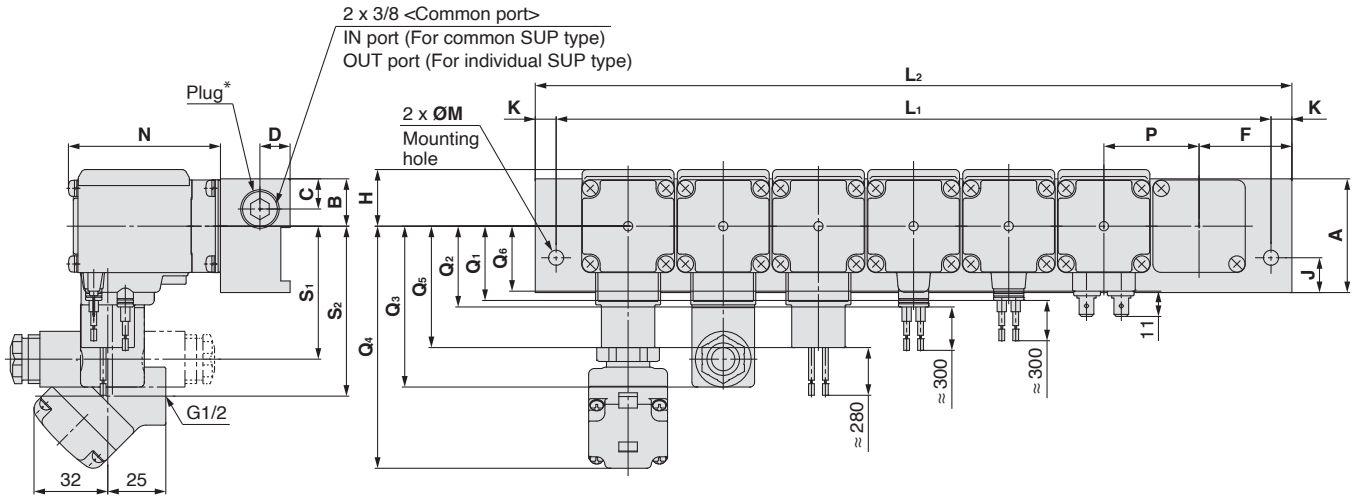

* D side port does not have a plug.

[mm]

Size	Dimensions	n (stations)								
		2	3	4	5	6	7	8	9	10
1	L_1	86	122	158	194	230	266	302	338	374
	L_2	100	136	172	208	244	280	316	352	388
2	L_1	90	126	162	198	234	270	306	342	378
	L_2	108	144	180	216	252	288	324	360	396
3	L_1	103	144	185	226	267	308	349	390	431
	L_2	121	162	203	244	285	326	367	408	449

Size	A	B	C	D	E	F	H	J	K	M	N	P
1	38	15.5	10.5	11	25	32	20	12	7	6.5	50.5 (56.5)	36
2	49	18	13	13	30	36	22	15	9	8.5	60.5 (68.5)	36
3	49	20.5	13	13	30	40	24.5	15	9	8.5	65.5 (73.5)	41

Size	Grommet		Grommet (With surge voltage suppressor)		DIN terminal*			Conduit terminal				Conduit		Flat terminal	
	Q_1	R_1	Q_2	R_2	Q_3	R_3	S_1	Q_4	R_4	S_2	T	Q_5	R_5	Q_6	R_6
1	27	40.5 (46.5)	30	27 (33)	64.5	32.5 (38.5)	52.5	99.5	34.5 (40.5)	68.5	66.5 (72)	47.5	34.5 (40.5)	23	40.5 (46.5)
2	29.5	49.5 (57.5)	32.5	36 (44)	67	41.5 (49.5)	55	102	43.5 (51.5)	71	75.5 (83.5)	50	43.5 (51.5)	25.5	49.5 (57.5)
3	32	54.5 (63)	35	41 (49)	69.5	46.5 (54.5)	57.5	104.5	48.5 (56.5)	73.5	80.5 (89.5)	52.5	48.5 (56.5)	28	54.5 (63)

( ): Denotes the Normally Open (N.O.) dimensions.
* When using a DIN terminal that faces downward, be careful of interference in the electrical wires and piping.

For Air, Medium Vacuum, Water, Oil and Steam

Replacement Parts

• DIN Connector Part No.

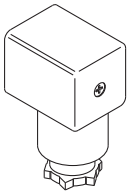

<For Class B Coil>

Electrical option	Rated voltage	Connector part no.
None	24 VDC	3G-GDM2A-G
	12 VDC	
	100 VAC	
	110 VAC	
	200 VAC	
	220 VAC	
	230 VAC	
	240 VAC	
	24 VAC	
	48 VAC	
With light	24 VDC	GDM2A-L5
	12 VDC	GDM2A-L6
	100 VAC	GDM2A-L1
	110 VAC	GDM2A-L1
	200 VAC	GDM2A-L2
	220 VAC	GDM2A-L2
	230 VAC	GDM2A-L2
	240 VAC	GDM2A-L2
	24 VAC	GDM2A-L5
	48 VAC	GDM2A-L15

<For Class H Coil>

Electrical option	Rated voltage	Connector part no.
None	24 VDC	GDM2A-G-S5
	100 VAC	GDM2A-R
	110 VAC	
	200 VAC	
	220 VAC	
	230 VAC	
	240 VAC	
	24 VAC	
	48 VAC	
With light	24 VDC	GDM2A-G-Z5
	100 VAC	GDM2A-R-L1
	110 VAC	GDM2A-R-L1
	200 VAC	GDM2A-R-L2
	220 VAC	GDM2A-R-L2
	230 VAC	GDM2A-R-L2
	240 VAC	GDM2A-R-L2
	24 VAC	GDM2A-R-L5
	48 VAC	GDM2A-R-L5

∗ Select an appropriate DIN connector suitable for the coil insulation type.

• Gasket Part No. for DIN Connector

VCW20-1-29-1 (For Class B Coil)
VCW20-1-29-1-F (For Class H Coil)

• Lead Wire Assembly for Flat Terminal (Set of 2 pcs.)

VX021S-1-16FB

• Bracket Assembly Part No. (for Metal Body)

VX02□N−12A

1	For VX2$^{1}_{4}$□□
2	For VX2$^{2}_{5}$□□
	For VX2$^{3}_{6}$□□

∗ 2 mounting screws are shipped together with the bracket assembly.
∗ On the bottom side of the standard body, there is no female thread for mounting a bracket. Please select XNB□.

Glossary of Terms

Pressure Terminology

1. Maximum operating pressure differential

The maximum pressure differential (the difference between the inlet and outlet pressure) which is allowed for operation. When the outlet pressure is 0 MPa, this becomes the maximum operating pressure.

2. Minimum operating pressure differential

The minimum pressure differential (the difference between the inlet pressure and outlet pressure) required to keep the main valve fully open.

3. Maximum system pressure

The maximum pressure that can be applied inside the pipelines (line pressure).

[The pressure differential of the solenoid valve portion must not exceed the maximum operating pressure differential.]

4. Withstand pressure

The pressure in which the valve must be withstood without a drop in performance after holding for one minute under prescribed pressure and returning to the operating pressure range. [value under the prescribed conditions]

Electrical Terminology

1. Apparent power (VA)

Volt-ampere is the product of voltage (V) and current (A).

Power consumption (W): For AC, $W = V \cdot A \cdot \cos\theta$.

For DC, $W = V \cdot A$.

Note) $\cos\theta$ shows power factor. $\cos\theta \approx 0.9$

2. Surge voltage

A high voltage which is momentarily generated by shutting off the power in the shut-off area.

3. Degree of protection

A degree defined in the "JIS C 0920: Waterproof test of electric machinery/appliance and the degree of protection against the intrusion of solid foreign objects."

Verify the degree of protection for each product.

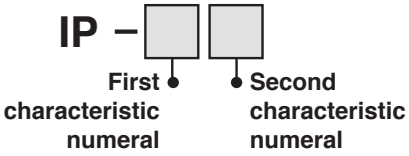

●First Characteristics:
Degrees of protection against solid foreign objects

0	Non-protected
1	Protected against solid foreign objects of 50 mmØ and greater
2	Protected against solid foreign objects of 12 mmØ and greater
3	Protected against solid foreign objects of 2.5 mmØ and greater
4	Protected against solid foreign objects of 1.0 mmØ and greater
5	Dust-protected
6	Dust-tight

Electrical Terminology

●Second Characteristics:
Degrees of protection against water

0	Non-protected	—
1	Protected against vertically falling water drops	Dripproof type 1
2	Protected against vertically falling water drops when enclosure tilted up to 15°	Dripproof type 2
3	Protected against rainfall when enclosure tilted up to 60°	Rainproof type
4	Protected against splashing water	Splashproof type
5	Protected against water jets	Water-jet-proof type
6	Protected against powerful water jets	Powerful water-jet-proof type
7	Protected against the effects of temporary immersion in water	Immersible type
8	Protected against the effects of continuous immersion in water	Submersible type

Example) IP65: Dust-tight, Water-jet-proof type

"Water-jet-proof type" means that no water intrudes inside an equipment that could hinder from operating normally by means of applying water for 3 minutes in the prescribed manner. Take appropriate protection measures, since a device is not usable in an environment where a droplet of water is splashed constantly.

Others

1. Material

NBR: Nitrile rubber

FKM: Fluororubber

EPDM: Ethylene propylene rubber

2. Oil-free treatment

The degreasing and washing of wetted parts

3. Symbol

In the symbol ( ), when the valve is closed, flow is blocked from port 1 to port 2. However, if the pressure in port 2 is higher than port 1, the valve will not be able to block the fluid and it will flow from port 2 to port 1.

Flat Terminal

Flat terminal/Electrical connection size of molded coil

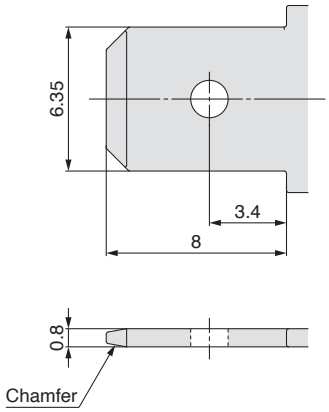

Solenoid Valve Flow-rate Characteristics
(How to indicate flow-rate characteristics)

1. Indication of flow-rate characteristics

The flow-rate characteristics in equipment such as a solenoid valve etc. are indicated in their specifications as shown in Table (1).

Table (1) Indication of Flow-rate Characteristics

Corresponding equipment	Indication by international standard	Other indications	Conformed standard
Pneumatic equipment	***C*, *b***	—	ISO 6358: 1989 JIS B 8390: 2000
	—	***S***	JIS B 8390: 2000 Equipment: JIS B 8373, 8374, 8375, 8379, 8381
		Cv	ANSI/(NFPA)T3.21.3: 1990
Process fluid control equipment	***Av***	—	IEC60534-2-3: 1997 JIS B 2005: 1995 Equipment: JIS B 8471, 8472, 8473
	—	***Cv***	

2. Pneumatic equipment

2.1 Indication according to the international standards

(1) Conformed standard

ISO 6358: 1989 : Pneumatic fluid power—Components using compressible fluids—Determination of flow-rate characteristics

JIS B 8390: 2000 : Pneumatic fluid power—Components using compressible fluids—How to test flow-rate characteristics

(2) Definition of flow-rate characteristics

The flow-rate characteristics are indicated as a result of a comparison between sonic conductance ***C*** and critical pressure ratio ***b***.

Sonic conductance ***C*** : Value which divides the passing mass flow rate of an equipment in a choked flow condition by the product of the upstream absolute pressure and the density in a standard condition.

Critical pressure ratio ***b*** : Pressure ratio (downstream pressure/upstream pressure) which will turn to a choked flow when the value is smaller than this ratio.

Choked flow : The flow in which the upstream pressure is higher than the downstream pressure and where sonic speed in a certain part of an equipment is reached.
Gaseous mass flow rate is in proportion to the upstream pressure and not dependent on the downstream pressure.

Subsonic flow : Flow greater than the critical pressure ratio

Standard condition : Air in a temperature state of 20 °C, absolute pressure 0.1 MPa (= 100 kPa = 1 bar), relative humidity 65 %.
It is stipulated by adding the "(ANR)" after the unit depicting air volume.
(standard reference atmosphere)
Conformed standard: ISO 8778: 1990 Pneumatic fluid power—Standard reference atmosphere, JIS B 8393: 2000: Pneumatic fluid power—Standard reference atmosphere

(3) Formula for flow rate

It is described by the practical units as following.

When $\frac{P_2 + 0.1}{P_1 + 0.1} \leq b$, **choked flow**

$$Q = 600 \times C\,(P_1 + 0.1)\sqrt{\frac{293}{273 + t}} \quad \cdots\cdots (1)$$

When $\frac{P_2 + 0.1}{P_1 + 0.1} > b$, **subsonic flow**

$$Q = 600 \times C\,(P_1 + 0.1)\sqrt{1 - \left[\frac{\frac{P_2 + 0.1}{P_1 + 0.1} - b}{1 - b}\right]^2}\sqrt{\frac{293}{273 + t}} \quad \cdots\cdots (2)$$

Q : Air flow rate [dm^3/min (ANR)], dm^3 (Cubic decimetre) of SI unit are also allowed to be described by L (litre).
1 dm^3 = 1 L

C : Sonic conductance [dm³/(s·bar)]
b : Critical pressure ratio [—]
P_1 : Upstream pressure [MPa]
P_2 : Downstream pressure [MPa]
t : Temperature [°C]
Note) Formula of subsonic flow is the elliptic analogous curve.
Flow-rate characteristics are shown in Graph (1) For details, please make use of SMC's "Energy Saving Program."

Example)
Obtain the air flow rate for P_1 = 0.4 [MPa], P_2 = 0.3 [MPa], ***t*** = 20 [°C] when a solenoid valve is performed in ***C*** = 2 [dm³/(s·bar)] and ***b*** = 0.3.

According to formula 1, the maximum flow rate = 600 x 2 x (0.4 + 0.1) x $\sqrt{\frac{293}{273 + 20}}$ = 600 [dm³/min (ANR)]

Pressure ratio = $\frac{0.3 + 0.1}{0.4 + 0.1}$ = 0.8
Based on Graph (1), the flow rate will be 0.7 when the pressure ratio is 0.8 and ***b*** = 0.3.
Hence, flow rate = Maximum flow rate x flow rate ratio = 600 x 0.7 = 420 [dm³/min (ANR)]

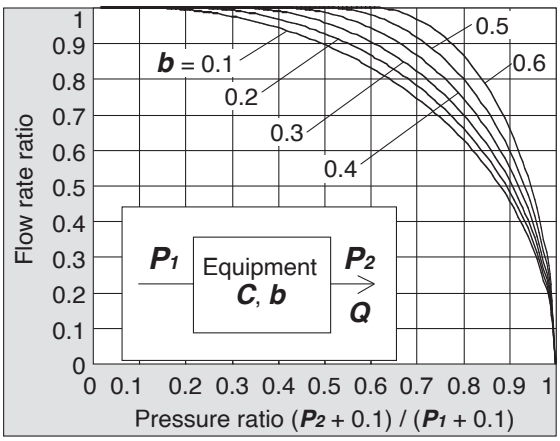

Graph (1) Flow-rate characteristics

(4) Test method
Attach a test equipment with the test circuit shown in Fig. (1) while maintaining the upstream pressure to a certain level which does not go below 0.3 MPa. Next, measure the maximum flow to be saturated in the first place, then measure this flow rate at 80 %, 60 %, 40 %, 20 % and the upstream and downstream pressure. And then, obtain the sonic conductance ***C*** from this maximum flow rate. Besides that, substitute each data of others for the subsonic flow formula to find ***b***, then obtain the critical pressure ratio ***b*** from that average.

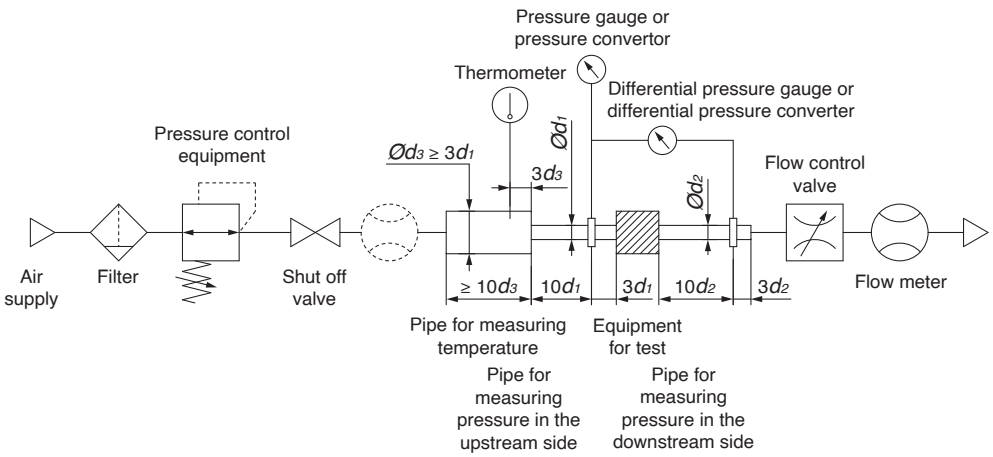

Fig. (1) Test circuit based on ISO 6358, JIS B 8390

2.2 Effective area *S*

(1) Conformed standard

JIS B 8390: 2000: Pneumatic fluid power—Components using compressible fluids—Determination of flow rate characteristics

Equipment standards: JIS B 8373: 2 port solenoid valve for pneumatics
JIS B 8374: 3 port solenoid valve for pneumatics
JIS B 8375: 4 port, 5 port solenoid valve for pneumatics
JIS B 8379: Silencer for pneumatics
JIS B 8381: Fittings of flexible joint for pneumatics

(2) Definition of flow-rate characteristics

Effective area ***S***: The cross-sectional area having an ideal throttle without friction deduced from the calculation of the pressure changes inside an air tank or without reduced flow when discharging the compressed air in a choked flow, from an equipment attached to the air tank. This is the same concept representing the "easy to run through" as sonic conductance ***C***.

(3) Formula for flow rate

When $\frac{P_2 + 0.1}{P_1 + 0.1} \leq 0.5$, **choked flow**

$$Q = 120 \times S\,(P_1 + 0.1)\sqrt{\frac{293}{273 + t}} \quad \cdots\cdots (3)$$

When $\frac{P_2 + 0.1}{P_1 + 0.1} > 0.5$, **subsonic flow**

$$Q = 240 \times S\,\sqrt{(P_2 + 0.1)\,(P_1 - P_2)}\sqrt{\frac{293}{273 + t}} \quad \cdots\cdots (4)$$

Conversion with sonic conductance ***C***:

$$S = 5.0 \times C \quad \cdots\cdots (5)$$

Q : Air flow rate[dm^3/min(ANR)], dm^3 (cubic decimetre) of SI unit are also allowed to be described by L (litre) 1 dm^3 = 1 L
S : Effective area [mm^2]
P_1 : Upstream pressure [MPa]
P_2 : Downstream pressure [MPa]
t : Temperature [°C]

Note) Formula for subsonic flow (4) is only applicable when the critical pressure ratio ***b*** is the unknown equipment. In the formula (2) by the sonic conductance ***C***, it is the same formula as when ***b*** = 0.5.

(4) Test method

Attach a test equipment with the test circuit shown in Fig. (2) in order to discharge air into the atmosphere until the pressure inside the air tank goes down to 0.25 MPa (0.2 MPa) from an air tank filled with the compressed air at a certain pressure level (0.5 MPa) which does not go below 0.6 MPa. At this time, measure the discharging time and the residual pressure inside the air tank which had been left until it turned to be the normal values to determine the effective area ***S***, using the following formula. The volume of an air tank should be selected within the specified range by corresponding to the effective area of an equipment for test. In the case of JIS B 8373, 8374, 8375, 8379, 8381, the pressure values are in parentheses and the coefficient of the formula is 12.9.

$$S = 12.1\,\frac{V}{t}\log_{10}\left(\frac{P_s + 0.1}{P + 0.1}\right)\sqrt{\frac{293}{T}} \quad \cdots\cdots (6)$$

S : Effective area [mm^2]
V : Air tank capacity [dm^3]
t : Discharging time [s]
P_s : Pressure inside air tank before discharging [MPa]
P : Residual pressure inside air tank after discharging [MPa]
T : Temperature inside air tank before discharging [K]

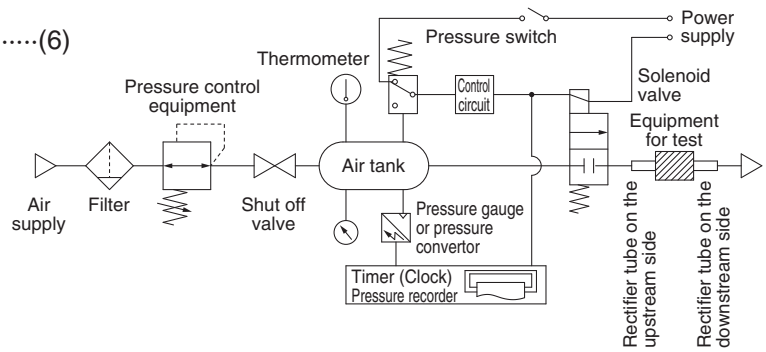

Fig. (2) Test circuit based on JIS B 8390

2.3 Flow coefficient *Cv* factor

The United States Standard ANSI/(NFPA)T3.21.3: 1990: Pneumatic fluid power—Flow rating test procedure and reporting method for fixed orifice components

Defines the ***Cv*** factor of flow coefficient by the following formula which is based on the test conducted by the test circuit analogous to ISO 6358.

$$Cv = \frac{Q}{114.5\sqrt{\frac{\Delta P\,(P_2 + P_a)}{T_1}}} \quad \cdots\cdots (7)$$

ΔP : Pressure drop between the static pressure tapping ports [bar]
P_1 : Pressure of the upstream tapping port [bar gauge]
P_2 : Pressure of the downstream tapping port [bar gauge]: $P_2 = P_1 - \Delta P$
Q : Flow rate [dm³/s standard condition]
P_a : Atmospheric pressure [bar absolute]
T_1 : Upstream absolute temperature [K]

Test conditions are < $P_1 + P_a = 6.5 \pm 0.2$ bar absolute, $T_1 = 297 \pm 5$ K, 0.07 bar $\leq \Delta P \leq$ 0.14 bar.

This is the same concept as effective area ***A*** which ISO 6358 stipulates as being applicable only when the pressure drop is smaller than the upstream pressure and the compression of air does not become a problem.

3. Process fluid control equipment

(1) Conformed standard

IEC60534-2-3: 1997: Industrial process control valves. Part 2: Flow capacity, Section Three-Test procedures

JIS B 2005: 1995: Test method for the flow coefficient of a valve

Equipment standards: JIS B 8471: Solenoid valve for water
JIS B 8472: Solenoid valve for steam
JIS B 8473: Solenoid valve for fuel oil

(2) Definition of flow-rate characteristics

Av factor: Value of the clean water flow rate represented by m³/s which runs through a valve (equipment for test) when the pressure difference is 1 Pa. It is calculated using the following formula.

$$Av = Q\sqrt{\frac{\rho}{\Delta P}} \quad \cdots\cdots (8)$$

Av : Flow coefficient [m²]
Q : Flow rate [m³/s]
ΔP : Pressure difference [Pa]
ρ : Fluid density [kg/m³]

(3) Formula of flow rate

It is described by the practical units. Also, the flow-rate characteristics are shown in Graph (2).

In the case of liquid:

$$Q = 1.9 \times 10^6 Av\sqrt{\frac{\Delta P}{G}} \quad \cdots\cdots (9)$$

Q : Flow rate [l/min]
Av : Flow coefficient [m²]
ΔP : Pressure difference [MPa]
G : Relative density [water = 1]

In the case of saturated aqueous vapor:

$$Q = 8.3 \times 10^6 Av\sqrt{\Delta P(P_2 + 0.1)} \quad \cdots\cdots (10)$$

Q : Flow rate [kg/h]
Av : Flow coefficient [m²]
ΔP : Pressure difference [MPa]
P_1 : Upstream pressure [MPa]: $\Delta P = P_1 - P_2$
P_2 : Downstream pressure [MPa]

Conversion of flow coefficient:

$Av = 28 \times 10^{-6}\ Kv = 24 \times 10^{-6}\ Cv$ ·····(11)

Here,

Kv factor : Value of the clean water flow rate represented by m³/h which runs through a valve at 5 to 40 °C, when the pressure difference is 1 bar.

Cv factor (Reference values): Figures representing the flow rate of clean water by US gal/min which runs through a valve at 60 °F, when the pressure difference is 1 lbf/in² (psi).

Value is different from ***Kv*** and ***Cv*** factors for pneumatic purpose due to different test method.

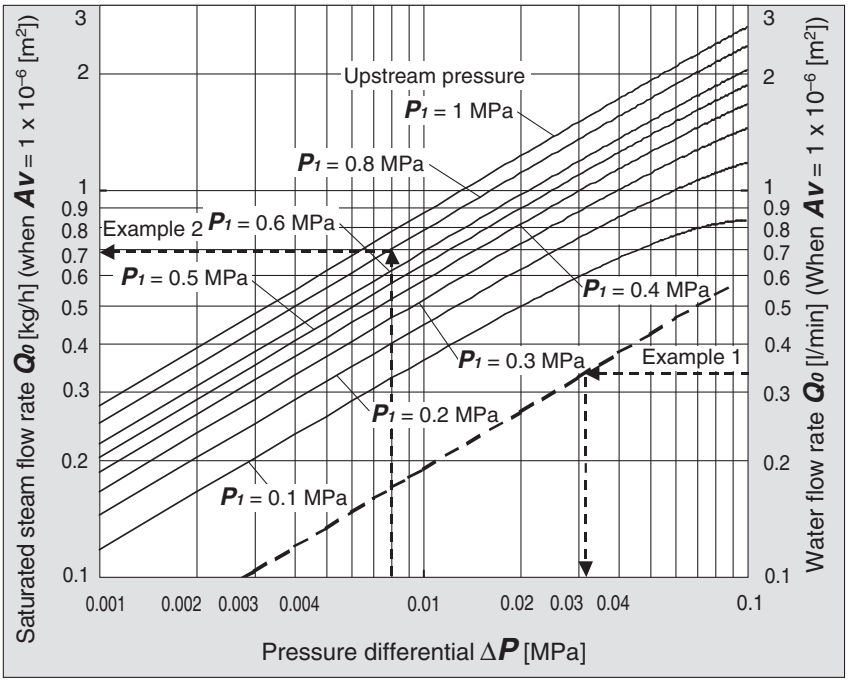

Graph (2) Flow-rate characteristics

Example 1)

Obtain the pressure difference when water 15 [l/min] runs through a solenoid valve with an $Av = 45 \times 10^{-6}$ [m²].
Since $Q_0 = 15/45 = 0.33$ [l/min], according to Graph (2), if reading ΔP when Q_0 is 0.33, it will be 0.031 [MPa].

Example 2)

Obtain the saturated steam flow rate when $P_1 = 0.8$ [MPa], $\Delta P = 0.008$ [MPa] with a solenoid valve with an $Av = 1.5 \times 10^{-6}$ [m²].
According to Graph (2), if reading Q_0 when P_1 is 0.8 and ΔP is 0.008, it is 0.7 [kg/h]. Hence, the flow rate $Q = 0.7 \times 1.5 = 1.05$ [kg/h].

(4) Test method

Attach a test equipment with the test circuit shown in Fig. (3). Next, pour water at 5 to 40 °C, then measure the flow rate with a pressure difference of 0.075 MPa. However, the pressure difference needs to be set with a large enough difference so that the Reynolds number does not go below a range of 4×10^4 .
By substituting the measurement results for formula (8) to figure out ***Av***.

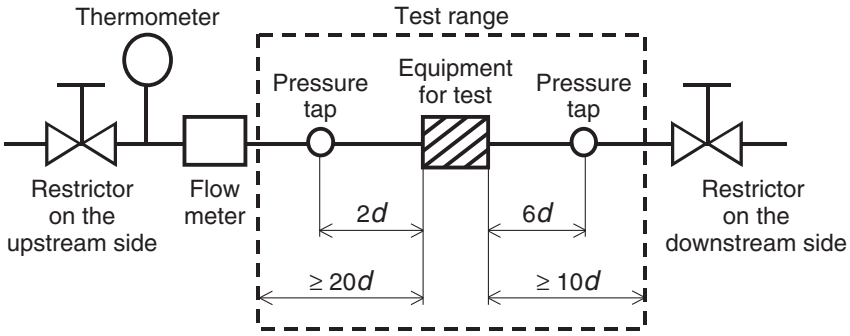

Fig. (3) Test circuit based on IEC60534-2-3, JIS B 2005

Flow-rate Characteristics 1

Note) Use this graph as a guide. In the case of obtaining an accurate flow rate, refer to pages 36 through to 40.

For Air

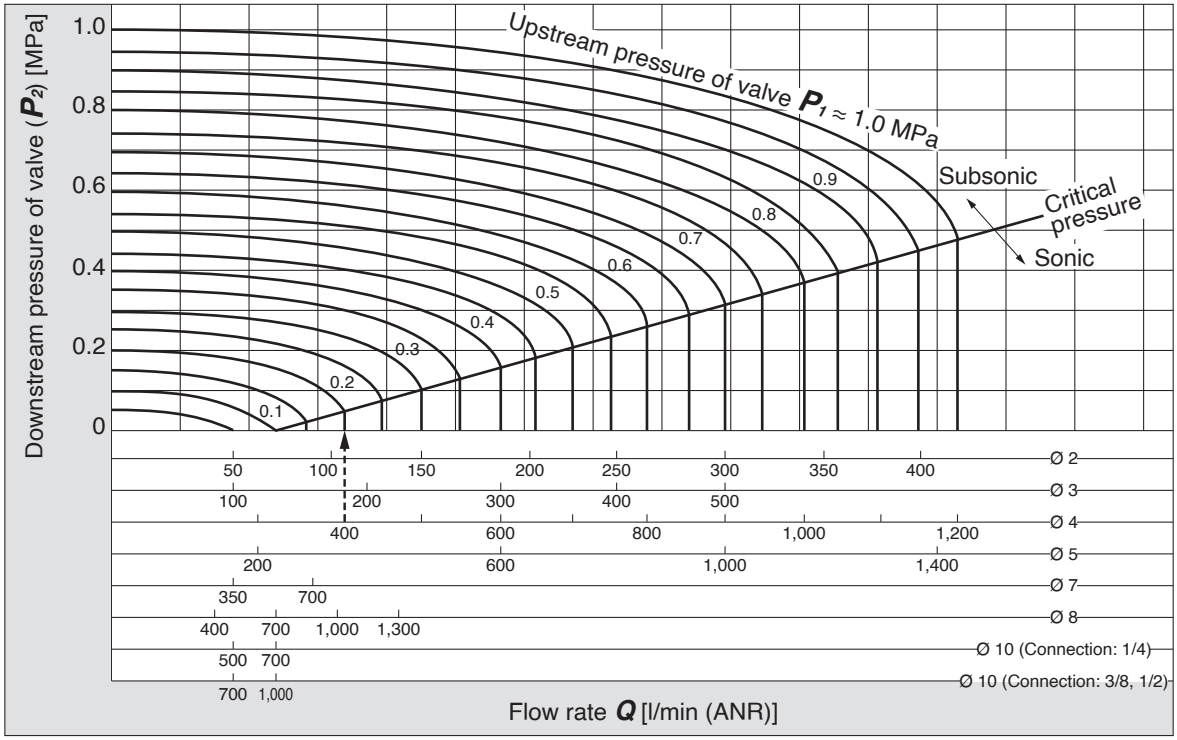

How to read the graph

The sonic range pressure to generate a flow rate of 400 l/min (ANR) is $P_1 \approx 0.2$ MPa for a Ø 4 orifice and $P_1 \approx 0.58$ MPa for a Ø 3 orifice.

For Water

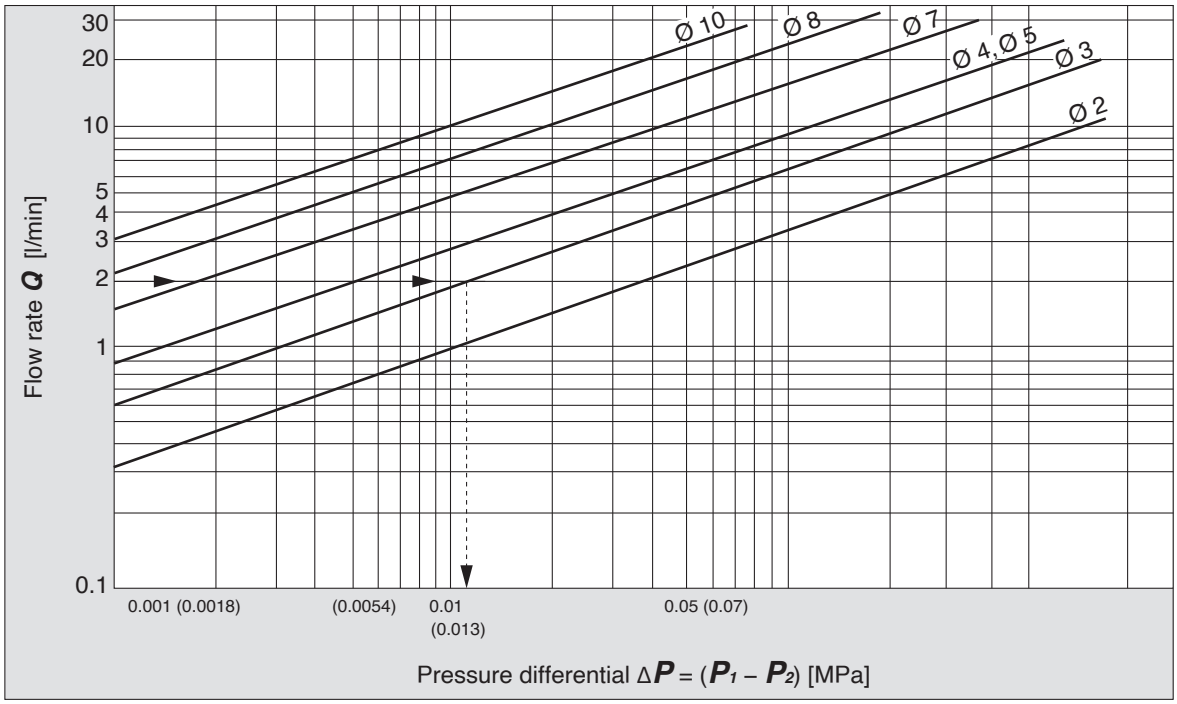

How to read the graph

When a water flow of 2 l/min is generated, $\Delta P \approx 0.013$ MPa for a valve with Ø 3 orifice.

Flow-rate Characteristics 2

Note) Use this graph as a guide. In the case of obtaining an accurate flow rate, refer to pages 36 through to 40.

For Saturated Steam

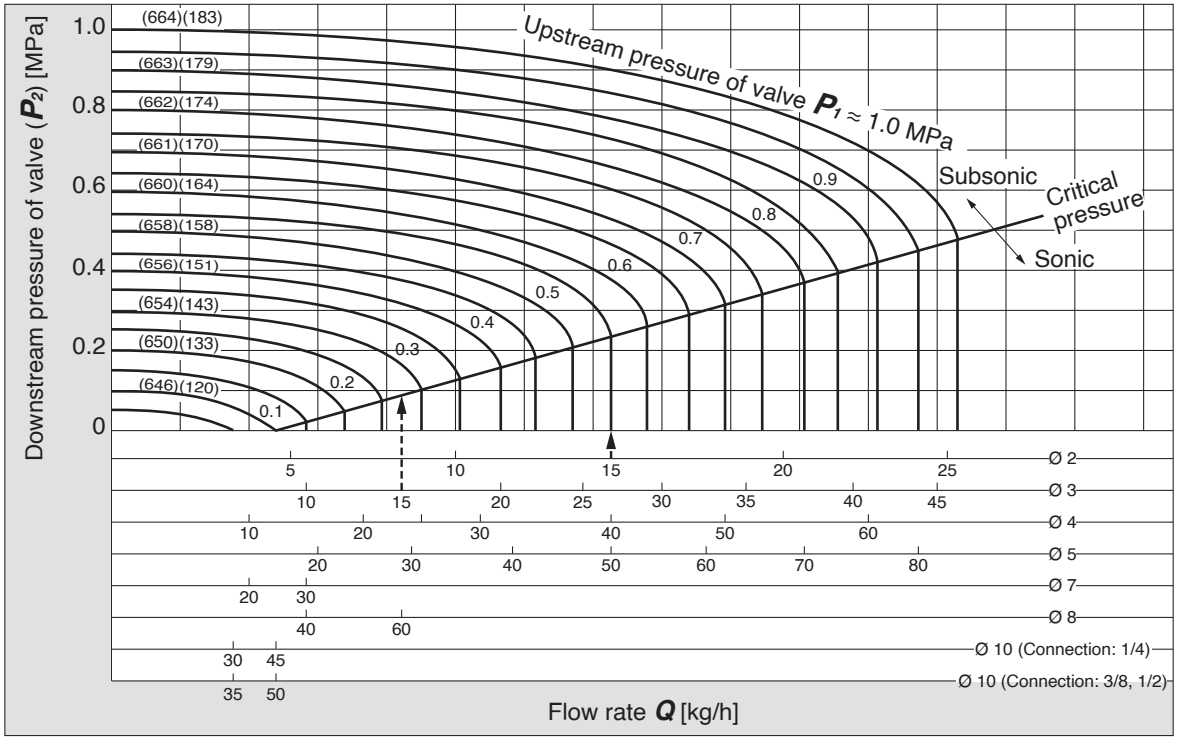

How to read the graph

The sonic range pressure to generate a flow rate of 15 kg/h is $P_1 \approx 0.55$ MPa for a Ø 2 orifice and $P_1 \approx 0.28$ MPa for a Ø 3 orifice.
The amount of potential heat varies somewhat based on the pressure P_1. At 15 kg/h, there will be approximately 9700 kcal/h of heat.

Series VX21/22/23
Specific Product Precautions 1

Be sure to read this before handling.
Refer to the back cover for Safety Instructions. For 2 Port Solenoid Valves for Fluid Control Precautions, refer to "Handling Precautions for SMC Products" and the Operation Manual on SMC website, http://www.smc.eu

Design

⚠ Warning

1. Cannot be used as an emergency shutoff valve etc.
The valves presented in this catalogue are not designed for safety applications such as an emergency shutoff valve. If the valves are used in this type of system, other reliable safety assurance measures should also be adopted.

2. Extended periods of continuous energization
The solenoid coil will generate heat when continuously energized. Avoid using in a tightly shut container. Install it in a well ventilated area. Furthermore, do not touch it while it is being energized or right after it is energized.

3. Liquid rings
In cases with a flowing liquid, provide a bypass valve in the system to prevent the liquid from entering the liquid seal circuit.

4. Actuator drive
When an actuator, such as a cylinder, is to be driven using a valve, take appropriate measures to prevent potential danger caused by actuator operation.

5. Pressure (including vacuum) holding
It is not usable for an application such as holding the pressure (including vacuum) inside of a pressure vessel because air leakage is entailed in a valve.

6. When the conduit type is used as equivalent to an IP65 enclosure, install a wiring conduit etc.

7. When an impact, such as water hammer etc., caused by the rapid pressure fluctuation is applied, the solenoid valve may be damaged. Give an attention to it.

Selection

⚠ Warning

1. Fluid

1) Type of fluid
Before using a fluid, check whether it is compatible with the materials of each model by referring to the fluids listed in this catalogue. Use a fluid with a kinematic viscosity of 50 mm^2/s or less.

2) Flammable oil, Gas
Check the specifications for leakage in the interior and/or exterior area.

3) Corrosive gas
Cannot be used since it will lead to cracks by stress corrosion or result in other incidents.

4) When a brass body is used, then depending on water quality, corrosion and internal leakage may occur. If such abnormalities occur, exchange the product for a stainless steel body.

5) Use an oil-free specification when any oily particle must not enter the passage.

6) Applicable fluid on the list may not be used depending on the operating condition. Give adequate confirmation, and then determine a model, just because the compatibility list shows the general case.

Selection

⚠ Warning

2. Fluid quality

<Air>

1) Use clean air.
Do not use compressed air that contains chemicals, synthetic oils including organic solvents, salt or corrosive gases, etc., as it can cause damage or malfunction.

2) Install an air filter.
Install air filters close to the valves on the upstream side. A filtration degree of 5 μm or less should be selected.

3) Install an aftercooler or air dryer, etc.
Compressed air that contains excessive drainage may cause malfunction of valves and other pneumatic equipment. To prevent this, install an aftercooler or air dryer, etc.

4) If excessive carbon powder is generated, eliminate it by installing mist separators at the upstream side of valves.
If excessive carbon powder is generated by the compressor, it may adhere to the inside of the valves and cause a malfunction.

<Vacuum>

Please be aware that there is a range of pressure that can be used.

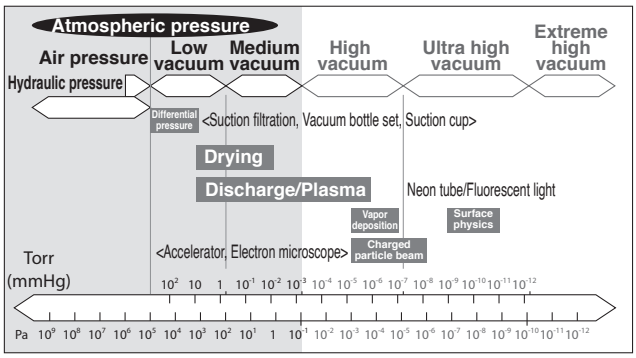

Vacuum piping direction: if the system uses a vacuum pump, we ask that you install the vacuum pump on the secondary side.

Also, install a filter on the primary side, and be careful that no foreign object is picked up.

Please replace the valve after operating the device approximately 300,000 times.

Specific Product Precautions 2

Be sure to read this before handling.
Refer to the back cover for Safety Instructions. For 2 Port Solenoid Valves for Fluid Control Precautions, refer to "Handling Precautions for SMC Products" and the Operation Manual on SMC website, http://www.smc.eu

Selection

⚠ Warning

<Water>

The use of a fluid that contains foreign objects can cause problems such as malfunction and seal failure by promoting wear of the valve seat and armature and by sticking to the sliding parts of the armature etc. Install a suitable filter (strainer) immediately upstream from the valve. As a general rule, use 100 mesh.
The supply water includes materials that create a hard sediment or sludge such as calcium and magnesium. Since this scale and sludge can cause the valve to malfunction, install water softening equipment, and a filter (strainer) directly upstream from the valve to remove these substances.

Tap water pressure:

The water pressure for tap water is normally 0.4 MPa or less. However, in places like a high-rise building, the pressure may be 1.0 MPa. When selecting tap water, be careful of the maximum operating pressure differential.

When using water or heated water, poor operation or leaks may be caused by dezincification, erosion, corrosion, etc. We also offer a stainless steel body type with improved corrosion resistance. Please use the one that fits your needs.

<Oil>

Generally, FKM is used as seal material, as it is resistant to oil. The resistance of the seal material may deteriorate depending on the type of oil, manufacturer or additives. Check the resistance before using. The kinematic viscosity must not exceed 50 mm^2/s.

<Steam>

The use of a steam that contains foreign objects can cause problems such as malfunction and seal failure by promoting wear of the valve seat and armature, and by sticking to the sliding parts of the armature etc. Install a suitable filter (strainer) immediately upstream from the valve.
As a standard, the mesh count for the strainer is 100 mesh. However, the size and shape of foreign objects that occur depends on the operating environment. Check the fluid status and choose an appropriate mesh count.
The supply water to a boiler includes materials that create a hard sediment or sludge such as calcium and magnesium.
Sediment and sludge from steam can cause the valve to not operate properly. Install a water softening device, which removes these materials. Do not use operation steam which contains chemicals, synthetic oils containing organic solvents, salts or corrosive gases, etc., as these can cause damage or deterioration.

3. Ambient environment

Use within the operable ambient temperature range. Check the compatibility between the product's composition materials and the ambient atmosphere. Be certain that the fluid used does not touch the external surface of the product.

4. Countermeasures against static electricity

Take measures to prevent static electricity since some fluids can cause static electricity.

Selection

⚠ Warning

5. Low temperature operation

1) The valve can be used in an ambient temperature of between –20 to –10 °C. However, take measures to prevent freezing or solidification of impurities, etc.
2) When using valves for water application in cold climates, take appropriate countermeasures to prevent the water from freezing in tubing after cutting the water supply from the pump, by draining the water etc. When warming by a heater etc., be careful not to expose the coil portion to a heater. Installation of a dryer, heat retaining of the body is recommended to prevent a freezing condition in which the dew point temperature is high and the ambient temperature is low, and the high flow runs.

⚠ Caution

1. Leakage voltage

Particularly when using a resistor in parallel with a switching element and using a C-R element (surge voltage suppressor) to protect the switching element, take note that leakage current will flow through the resistor, C-R element, etc., creating a possible danger that the valve may not turn off.

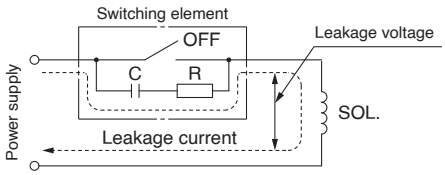

AC coil: 5 % or less of rated voltage
DC coil: 2 % or less of rated voltage

2. Selecting model

Material depends on fluid. Select optimal models for the fluid.

3. When the fluid is oil.

The kinematic viscosity must not exceed 50 mm^2/s.

Mounting

⚠ Warning

1. If air leakage increases or equipment does not operate properly, stop operation.

After mounting is completed, confirm that it has been done correctly by performing a suitable function test.

2. Do not apply external force to the coil section.

When tightening is performed, apply a wrench or other tool to the outside of the piping connection parts.

3. Mount a valve with its coil position upward, not downward.

When mounting a valve with its coil positioned downward, foreign objects in the fluid will adhere to the iron core leading to a malfunction. Especially for strict leakage control, such as with vacuum applications and non-leak specifications, the coil must be positioned upward.

4. Do not warm the coil assembly with a heat insulator etc.

Use tape, heaters, etc., for freeze prevention on the piping and body only. They can cause the coil to burn out.

Specific Product Precautions 3

Be sure to read this before handling.
Refer to the back cover for Safety Instructions. For 2 Port Solenoid Valves for Fluid Control Precautions, refer to "Handling Precautions for SMC Products" and the Operation Manual on SMC website, http://www.smc.eu

Mounting

⚠ Warning

5. Secure with brackets, except in the case of steel piping and copper fittings.

6. Avoid sources of vibration, or adjust the arm from the body to the minimum length so that resonance will not occur.

7. Painting and coating

Warnings or specifications printed or labelled on the product should not be erased, removed or covered up.

Disassembly/Assembly Procedures

⚠ Caution

1. Before starting the disassembly work, be sure to shut off the power supply and pressure supply, and then release the residual pressure.

Disassembly

<N.C.>

1) Loosen the mounting screws.
The coil assembly, seal, return spring, armature assembly and body can be removed.

<N.O.>

1) Loosen the mounting screws.
The coil assembly, push rod assembly, O-rings, adapter and body can be removed.

Assembly

<Common to N.C. and N.O.>

1) Mount the components on the body in the reverse order of disassembly.
2) When changing the electrical entry direction, turn the coil assembly in a desired direction to mount it.
3) Push the coil assembly against the body and tighten the screws two or more rounds diagonally (Fig. 2) in the status that there are no gaps between the coil assembly and body (Fig. 1).
Tighten the screws in the order of "1→2→3→4→1→2→3→4".

Proper Tightening Torque [N·m]

VX21	0.5
VX22	0.7
VX23	

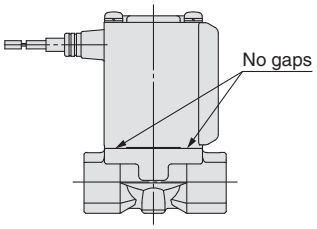

Fig.1

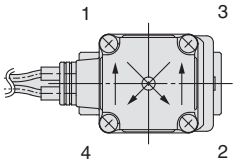

Fig.2

∗ After tightening the screws, make sure that there are no gaps between the coil and body (Fig. 1).
∗ After the disassembly and assembly have been completed, make sure that no leak occurs from the seal. Additionally, when restarting the valve, make sure that the valve operates correctly after checking the safety.

Disassembly/Assembly Procedures

⚠ Caution

<N.C.> **<N.O.>**

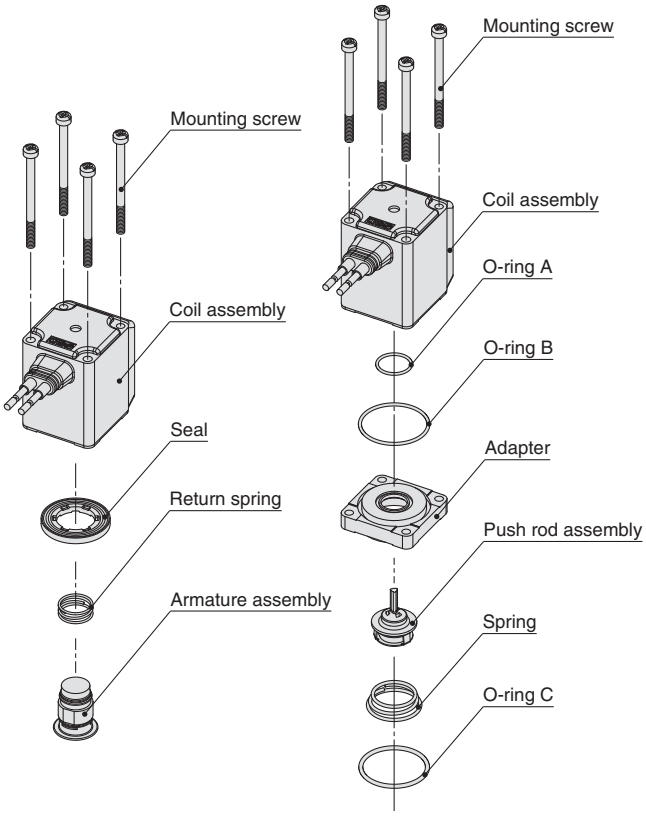

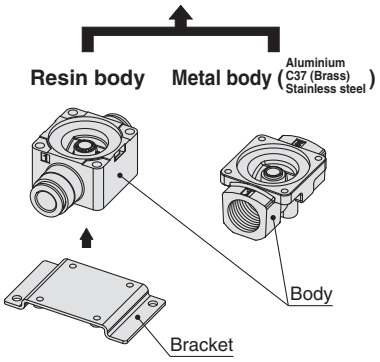

Specific Product Precautions 4

Be sure to read this before handling.
Refer to the back cover for Safety Instructions. For 2 Port Solenoid Valves for Fluid Control Precautions, refer to "Handling Precautions for SMC Products" and the Operation Manual on SMC website, http://www.smc.eu

Disassembly/Assembly Procedures

⚠Caution

Manifold Exploded View

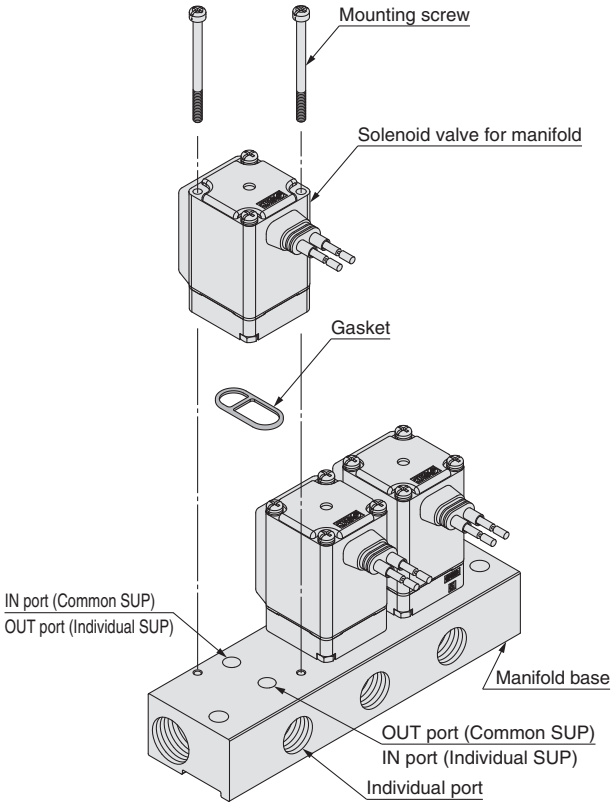

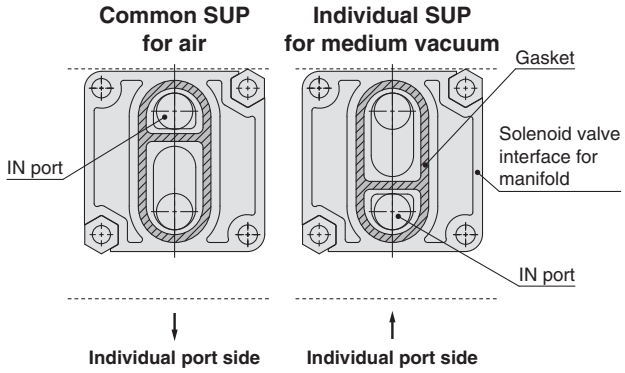

∗ Mounting orientation exists when mounting valves onto manifold base. Mount it as shown above.
∗ Take great care when special electrical entry direction (XC) is used.

Piping

⚠Warning

1. During use, deterioration of the tube or damage to the fittings could cause tubes to come loose from their fittings and thrash about.

To prevent uncontrolled tube movement, install protective covers or fasten tubes securely in place.

2. For piping the tube, fix the product securely using the mounting holes so that the product is not in the air.

⚠Caution

1. Preparation before piping

Before piping is connected, it should be thoroughly blown out with air (flushing) or washed to remove chips, cutting oil and other debris from inside the pipe. Avoid pulling, compressing, or bending the valve body when piping.

2. Avoid connecting ground lines to piping, as this may cause electric corrosion of the system.

3. Always tighten threads with the proper tightening torque.

When using steel piping, tighten with the proper tightening torque shown below.
Lower tightening torque will lead into fluid leakage.

Tightening Torque for Piping

Thread size	Proper tightening torque [N·m]
Rc1/8	7 to 9
Rc1/4	12 to 14
Rc3/8	22 to 24
Rc1/2	28 to 30

4. Connection of piping to products

When connecting piping to a product, avoid mistakes regarding the supply port etc.

5. Wrapping of sealant tape

When connecting pipes, fittings, etc., be sure that chips from the pipe threads and sealing material do not enter the valve.
Furthermore, when sealant tape is used, leave 1.5 to 2 thread ridges exposed at the end of the threads.

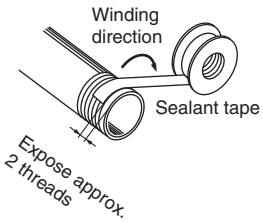

6. In applications such as vacuum and non-leak specifications, use caution specifically against the contamination of foreign objects or airtightness of the fittings.

Specific Product Precautions 5

Be sure to read this before handling.
Refer to the back cover for Safety Instructions. For 2 Port Solenoid Valves for Fluid Control Precautions, refer to "Handling Precautions for SMC Products" and the Operation Manual on SMC website, http://www.smc.eu

Recommended Piping Conditions

1. **When connecting tubes using One-touch fittings, provide some spare tube length shown in Fig. 1, recommended piping configuration.**
   Also, do not apply external force to the fittings when binding tubes with bands etc. (see Fig. 2.)

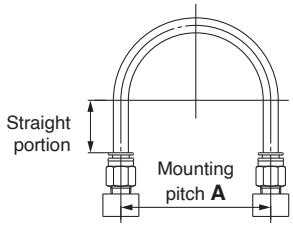

Fig. 1 Recommended piping configuration

Unit: mm

Tube size	Mounting pitch **A**			Straight portion length
	Nylon tubing	Soft nylon tubing	Polyurethane tubing	
Ø 1/8"	44 or more	29 or more	25 or more	16 or more
Ø 6	84 or more	39 or more	39 or more	30 or more
Ø 1/4"	89 or more	56 or more	57 or more	32 or more
Ø 8	112 or more	58 or more	52 or more	40 or more
Ø 10	140 or more	70 or more	69 or more	50 or more
Ø 12	168 or more	82 or more	88 or more	60 or more

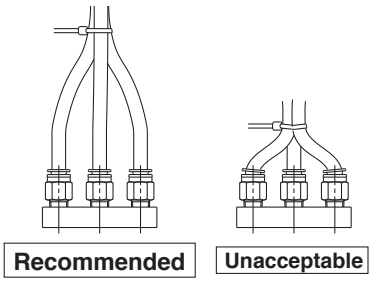

Fig. 2 Binding tubes with bands

Wiring

⚠ Warning

1. **Do not apply AC voltage to Class "H" coil AC type unless it is built in full-wave rectifier, or the coil will be damaged.**

⚠ Caution

1. **As a rule, use electrical wire with a cross sectional area of 0.5 to 1.25 mm^2 for wiring.**
   Furthermore, do not allow excessive force to be applied to the lines.
2. **Use electrical circuits which do not generate chattering in their contacts.**
3. **Use voltage which is within ±10 % of the rated voltage. In cases with a DC power supply where importance is placed on responsiveness, stay within ±5 % of the rated value. The voltage drop is the value in the lead wire section connecting the coil.**
4. **When a surge from the solenoid affects the electrical circuitry, install a surge voltage suppressor etc., in parallel with the solenoid. Or, adopt an option that comes with the surge voltage protection circuit. (However, a surge voltage occurs even if the surge voltage protection circuit is used.**

Series VX21/22/23
Specific Product Precautions 6

Be sure to read this before handling.
Refer to the back cover for Safety Instructions. For 2 Port Solenoid Valves for Fluid Control Precautions, refer to "Handling Precautions for SMC Products" and the Operation Manual on SMC website, http://www.smc.eu

Operating Environment

⚠Warning

1. **Do not use in an atmosphere having corrosive gases, chemicals, sea water, water, water steam, or where there is direct contact with any of these.**
2. **Do not use in explosive atmospheres.**
3. **Do not use in locations subject to vibration or impact.**
4. **Do not use in locations where radiated heat will be received from nearby heat sources.**
5. **Employ suitable protective measures in locations where there is contact with water droplets, oil or welding spatter, etc.**

Maintenance

⚠Warning

1. **Removing the product**
   The valve will reach a high temperature when used with high temperature fluids. Confirm that the valve temperature has dropped sufficiently before performing work. If touched inadvertently, there is a danger of being burned.
   1) Shut off the fluid supply and release the fluid pressure in the system.
   2) Shut off the power supply.
   3) Dismount the product.
2. **Low frequency operation**
   Switch valves at least once every 30 days to prevent malfunction. Also, in order to use it under the optimum state, conduct a regular inspection once a half year.

⚠Caution

1. **Filters and strainers**
   1) Be careful regarding clogging of filters and strainers.
   2) Replace filter elements after one year of use, or earlier if the pressure drop reaches 0.1 MPa.
   3) Clean strainers when the pressure drop reaches 0.1 MPa.
2. **Lubrication**
   When using after lubricating, never forget to lubricate continuously.
3. **Storage**
   In case of long term storage after use, thoroughly remove all moisture to prevent rust and deterioration of rubber materials etc.
4. **Exhaust the drainage from an air filter periodically.**

Operating Precautions

⚠Warning

1. **If there is a possibility of reverse pressure being applied to the valve, take countermeasures such as mounting a check valve on the downstream side of the valve.**
2. **When problems are caused by a water hammer, install water hammer relief equipment (accumulator etc.), or use an SMC water hammer relief valve (VXR series).**

Electrical Connections

⚠Caution

■ Grommet

Class B coil: AWG20 Insulator O.D. 2.6 mm
Class H coil: AWG18 Insulator O.D. 2.1 mm

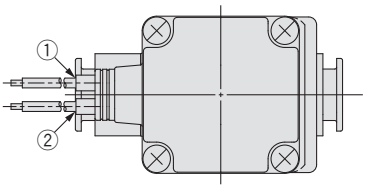

Rated voltage	Lead wire color	
	①	②
DC	Black	Red
100 VAC	Blue	Blue
200 VAC	Red	Red
Other AC	Grey	Grey

* There is no polarity.

■ DIN terminal

Disassembly

1. After loosening the binding head screw with flange, then if the housing is pulled in the direction of the arrow, the connector will be removed from the solenoid valve.
2. Pull out the binding head screw with flange from the housing.
3. There is a cutout on the bottom of the terminal block. Insert a small flat head screwdriver, etc. into this cutout, and remove the terminal block from the housing. (See figure below.)
4. Remove the ground nut, and pull out the washer and the rubber seal.

Wiring

1. Pass the cable through the ground nut, washer and rubber seal in this order, and insert these parts into the housing.
2. Loosen the binding head screw of the terminal block, then insert the core wire or the crimped terminal of the lead wire into the terminal, and securely fix it with the binding head screw. The binding head screw of the terminal block is M3.
   Note 1) Tighten the screw to a torque of between 0.5 and 0.6 N·m.
   Note 2) Cable O.D.: Ø 6 to Ø12 mm
   Note 3) For an outside cable diameter of Ø 9 to 12 mm, remove the internal parts of the rubber seal before using.

Assembly

1. Pass the cable through the ground nut, washer, rubber seal and the housing in this order, and connect to the terminal block. Then, set the terminal block inside the housing. (Push in the terminal block until it snaps into position.)
2. Insert the rubber seal and the washer in this order into the cable entry of the housing, and then tighten the ground nut securely.
3. Insert the gasket between the bottom part of the terminal block and the plug attached to the equipment, and then insert the binding head screw with flange from the top of the housing, and tighten it.
   Note 1) Tighten the screw to a torque of between 0.5 and 0.6 N·m.
   Note 2) The orientation of the connector can be changed in steps of 90° by changing the method of assembling the housing and the terminal block.

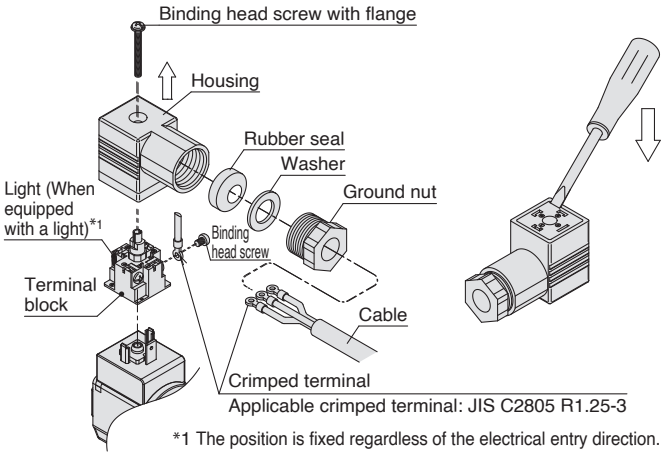

*1 The position is fixed regardless of the electrical entry direction.

Specific Product Precautions 7

Be sure to read this before handling.
Refer to the back cover for Safety Instructions. For 2 Port Solenoid Valves for Fluid Control Precautions, refer to "Handling Precautions for SMC Products" and the Operation Manual on SMC website, http://www.smc.eu

Electrical Connections

⚠Caution

Internal connections are as shown below. Make connections to the power supply accordingly.

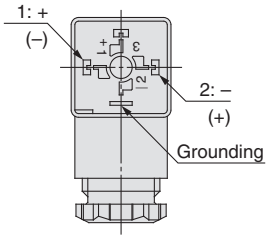

Terminal no.	1	2
DIN terminal	+(–)	–(+)

∗ There is no polarity.

DIN (EN175301-803) Terminal

This DIN terminal corresponds to the Form A DIN connector with an 18 mm terminal pitch, which complies with EN175301-803B.

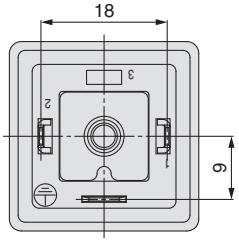

■ **Conduit terminal**

Disassembly

1. Loosen the mounting screw, and remove the terminal cover from the conduit terminal.

Wiring

1. Insert the cable into the conduit terminal.
2. Loosen the screw with UP terminal of the conduit terminal, then insert the core wire or the crimped terminal of the lead wire into the terminal, and securely fix it with the screw with UP terminal.
   Note 1) Tighten the screw to a torque of between 0.5 and 0.6 N·m.

⚠Caution

■ **Conduit terminal**

Assembly

1. Insert the gasket into the conduit terminal, and then clamp the terminal cover with the mounting screw.
   Note 1) Tighten the screw to a torque of between 0.5 and 0.6 N·m.
   Note 2) When changing the orientation of the conduit terminal, carry out the following procedure.
   1. Apply a tool (monkey wrench, spanner, etc.) to the width across flats of the conduit terminal, and turn the terminal in the counterclockwise direction.
   2. Loosen the lock nut.
   3. Turn the conduit terminal in the clamping direction (clockwise direction) to about 15° ahead of the desired position.
   4. Turn the lock nut by hand to the coil side until it is lightly tightened.
   5. Apply a tool to the width across flats of the conduit terminal, and turn it to the desired position (through an angle of about 15°) so as to clamp the conduit terminal.
   Note) When changing the orientation by applying additional tightening force to the conduit terminal from the factory-set position, turn no more than one half a turn.

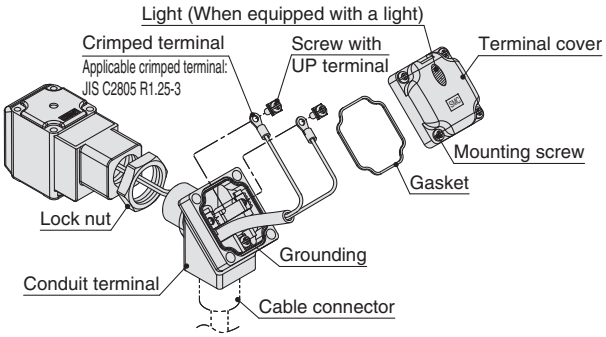

Make connections according to the marks shown below.
- Use the tightening torques below for each section.
- Properly seal the terminal connection (G1/2) with the special wiring conduit etc.

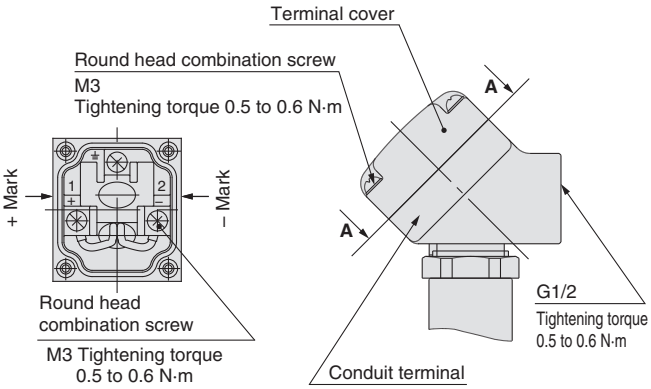

View A-A
(Internal connection diagram)

⚠ Safety Instructions

These safety instructions are intended to prevent hazardous situations and/or equipment damage. These instructions indicate the level of potential hazard with the labels of **"Caution," "Warning"** or **"Danger."** They are all important notes for safety and must be followed in addition to International Standards (ISO/IEC) [1], and other safety regulations.

⚠ **Danger:**	**Danger** indicates a hazard with a high level of risk which, if not avoided, will result in death or serious injury.
⚠ **Warning:**	**Warning** indicates a hazard with a medium level of risk which, if not avoided, could result in death or serious injury.
⚠ **Caution:**	**Caution** indicates a hazard with a low level of risk which, if not avoided, could result in minor or moderate injury.

1) ISO 4414: Pneumatic fluid power – General rules and safety requirements for systems and their components.
ISO 4413: Hydraulic fluid power – General rules and safety requirements for systems and their components.
IEC 60204-1: Safety of machinery – Electrical equipment of machines. (Part 1: General requirements)
ISO 10218-1: Robots and robotic devices - Safety requirements for industrial robots - Part 1: Robots.
etc.

⚠ Warning

1. **The compatibility of the product is the responsibility of the person who designs the equipment or decides its specifications.**
   Since the product specified here is used under various operating conditions, its compatibility with specific equipment must be decided by the person who designs the equipment or decides its specifications based on necessary analysis and test results. The expected performance and safety assurance of the equipment will be the responsibility of the person who has determined its compatibility with the product. This person should also continuously review all specifications of the product referring to its latest catalogue information, with a view to giving due consideration to any possibility of equipment failure when configuring the equipment.

2. **Only personnel with appropriate training should operate machinery and equipment.**
   The product specified here may become unsafe if handled incorrectly. The assembly, operation and maintenance of machines or equipment including our products must be performed by an operator who is appropriately trained and experienced.

3. **Do not service or attempt to remove product and machinery/equipment until safety is confirmed.**
   1. The inspection and maintenance of machinery/equipment should only be performed after measures to prevent falling or runaway of the driven objects have been confirmed.
   2. When the product is to be removed, confirm that the safety measures as mentioned above are implemented and the power from any appropriate source is cut, and read and understand the specific product precautions of all relevant products carefully.
   3. Before machinery/equipment is restarted, take measures to prevent unexpected operation and malfunction.

4. **Our products cannot be used beyond their specifications.**
   Our products are not developed, designed, and manufactured to be used under the following conditions or environments.
   Use under such conditions or environments is not covered.
   1. Conditions and environments outside of the given specifications, or use outdoors or in a place exposed to direct sunlight.
   2. Use for nuclear power, railways, aviation, space equipment, ships, vehicles, military application, equipment affecting human life, body, and property, fuel equipment, entertainment equipment, emergency shut-off circuits, press clutches, brake circuits, safety equipment, etc., and use for applications that do not conform to standard specifications such as catalogues and operation manuals.
   3. Use for interlock circuits, except for use with double interlock such as installing a mechanical protection function in case of failure. Please periodically inspect the product to confirm that the product is operating properly.

⚠ Caution

We develop, design, and manufacture our products to be used for automatic control equipment, and provide them for peaceful use in manufacturing industries.
Use in non-manufacturing industries is not covered.
Products we manufacture and sell cannot be used for the purpose of transactions or certification specified in the Measurement Act.
The new Measurement Act prohibits use of any unit other than SI units in Japan.

Limited warranty and Disclaimer/Compliance Requirements

The product used is subject to the following "Limited warranty and Disclaimer" and "Compliance Requirements".Read and accept them before using the product.

Limited warranty and Disclaimer

1. The warranty period of the product is 1 year in service or 1.5 years after the product is delivered, whichever is first. [2] Also, the product may have specified durability, running distance or replacement parts. Please consult your nearest sales branch.
2. For any failure or damage reported within the warranty period which is clearly our responsibility, a replacement product or necessary parts will be provided. This limited warranty applies only to our product independently, and not to any other damage incurred due to the failure of the product.
3. Prior to using SMC products, please read and understand the warranty terms and disclaimers noted in the specified catalogue for the particular products.

2) Vacuum pads are excluded from this 1 year warranty.
A vacuum pad is a consumable part, so it is warranted for a year after it is delivered. Also, even within the warranty period, the wear of a product due to the use of the vacuum pad or failure due to the deterioration of rubber material are not covered by the limited warranty.

Compliance Requirements

1. The use of SMC products with production equipment for the manufacture of weapons of mass destruction (WMD) or any other weapon is strictly prohibited.
2. The exports of SMC products or technology from one country to another are governed by the relevant security laws and regulations of the countries involved in the transaction. Prior to the shipment of a SMC product to another country, assure that all local rules governing that export are known and followed.

SMC Corporation (Europe)

Austria	+43 (0)2262622800	www.smc.at	office.at@smc.com
Belgium	+32 (0)33551464	www.smc.be	info@smc.be
Bulgaria	+359 (0)2807670	www.smc.bg	sales.bg@smc.com
Croatia	+385 (0)13707288	www.smc.hr	sales.hr@smc.com
Czech Republic	+420 541424611	www.smc.cz	office.at@smc.com
Denmark	+45 70252900	www.smcdk.com	smc.dk@smc.com
Estonia	+372 651 0370	www.smcee.ee	info.ee@smc.com
Finland	+358 207513513	www.smc.fi	smc.fi@smc.com
France	+33 (0)164761000	www.smc-france.fr	supportclient.fr@smc.com
Germany	+49 (0)61034020	www.smc.de	info.de@smc.com
Greece	+30 210 2717265	www.smchellas.gr	sales@smchellas.gr
Hungary	+36 23513000	www.smc.hu	office.hu@smc.com
Ireland	+353 (0)14039000	www.smcautomation.ie	technical.ie@smc.com
Italy	+39 03990691	www.smcitalia.it	mailbox.it@smc.com
Latvia	+371 67817700	www.smc.lv	info.lv@smc.com
Lithuania	+370 5 2308118	www.smclt.lt	info.lt@smc.com
Netherlands	+31 (0)205318888	www.smc.nl	info@smc.nl
Norway	+47 67129020	www.smc-norge.no	post.no@smc.com
Poland	+48 22 344 40 00	www.smc.pl	office.pl@smc.com
Portugal	+351 214724500	www.smc.eu	apoiocliente.pt@smc.com
Romania	+40 213205111	www.smcromania.ro	office.ro@smc.com
Russia	+7 (812)3036600	www.smc.eu	sales@smcru.com
Slovakia	+421 (0)413213212	www.smc.sk	sales.sk@smc.com
Slovenia	+386 (0)73885412	www.smc.si	office.si@smc.com
Spain	+34 945184100	www.smc.eu	post.es@smc.com
Sweden	+46 (0)86031240	www.smc.nu	order.se@smc.com
Switzerland	+41 (0)523963131	www.smc.ch	helpcenter.ch@smc.com
Turkey	+90 212 489 0 440	www.smcturkey.com.tr	satis@smcturkey.com.tr
UK	+44 (0)845 121 5122	www.smc.uk	sales.gb@smc.com
South Africa	+27 10 900 1233	www.smcza.co.za	Sales.za@smc.com

Printing DO 00 Printed in Spain

Specifications are subject to change without prior notice and any obligation on the part of the manufacturer