SMC

5 Port Solenoid Valve

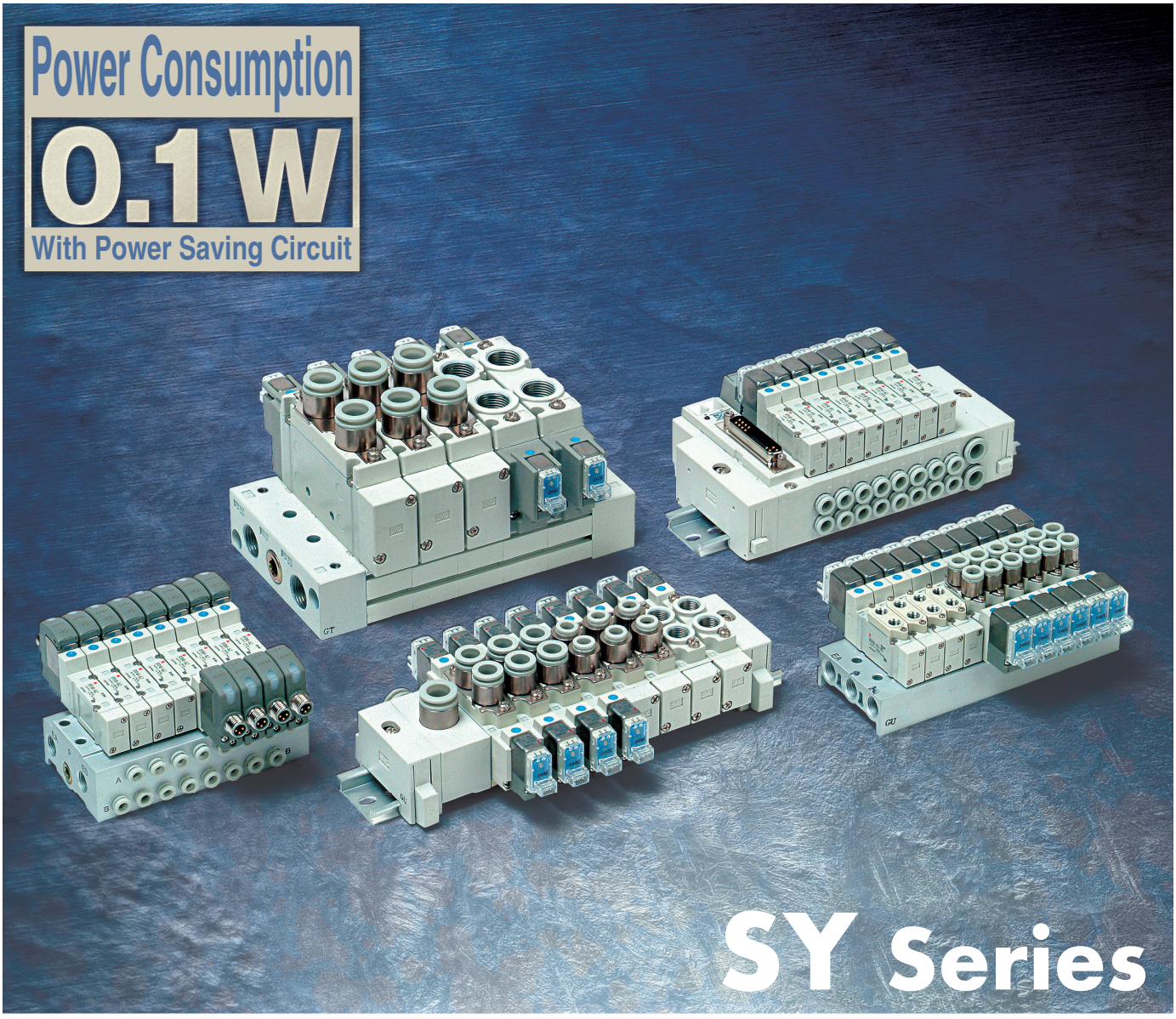

• **Flow Characteristics**

Series	Flow characteristics			
	C [dm³/(s·bar)]	b	Cv	Q [ℓ/min(ANR)]
SY3000	1.1	0.28	0.29	276
SY5000	2.8	0.37	0.90	746
SY7000	4.5	0.28	1.4	1130
SY9000	10	0.29	2.5	2527

● Long servise life

∗ Please contact SMC if life test data is required.

Cylinder Speed Chart

Use as a guide for selection.
Please confirm the actual conditions with SMC Sizing Program.

Body Ported

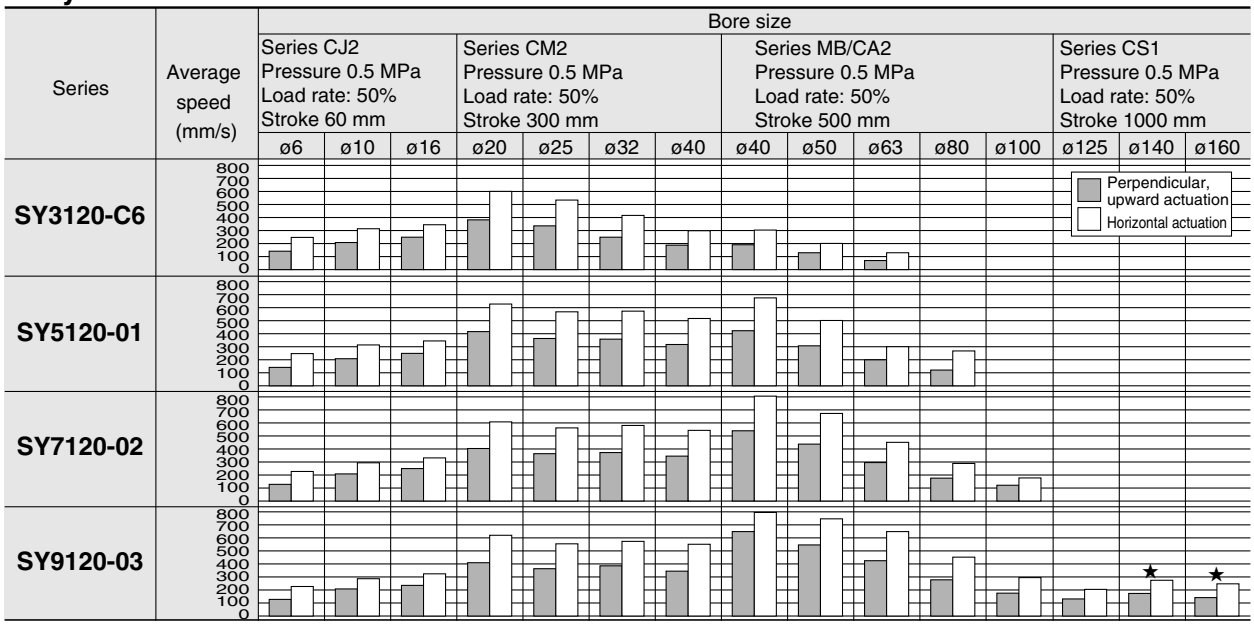

Base Mounted

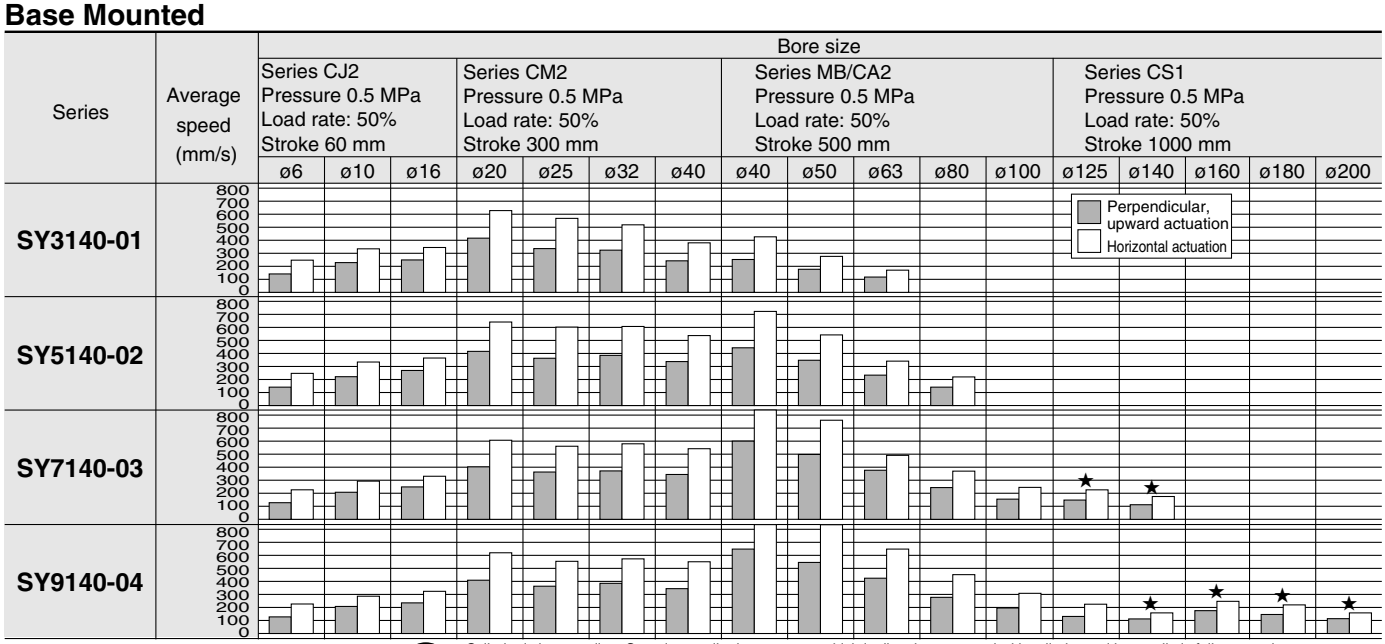

* Cylinder is in extending. Speed controller is meter-out, which is directly connected with cylinder and its needle is fully opened.
* Average speed of cylinder is obtained by dividing the full stroke time by the stroke.
* Load factor: ((Load weight x 9.8) /Theoretical force) x 100%
* The histograms with ★ marked are the case when piping is done by using steel.

Conditions

Body ported		Series CJ2	Series CM2	Series MB/CA2	Series CS1
SY3120-C6	Tubing bore x Length	T0604 x 1 m			–
	Speed controller	AS2051F-06			–
	Silencer	AN120-M5			–
SY5120-01	Tubing bore x Length	T0604 x 1 m	T0806 x 1 m		–
	Speed controller	AS3001F-06	AS3001F-08		–
	Silencer	AN101-01			–
SY7120-02	Tubing bore x Length	T0604 x 1 m	T1075 x 1 m		–
	Speed controller	AS3001F-06	AS4001F-10		–
	Silencer	AN110-01			–
SY9120-03	Tubing bore x Length	T0604 x 1 m	T1075 x 1 m	T1209 x 1 m	
	Speed controller	AS3001F-06	AS4001F-10	AS4001F-12	
	Silencer	AN200-02			AN202-02

Conditions [When using SGP (steel pipe)]

Body ported		Series CS1
SY9120-03	Tubing bore x Length	SGP10A x 1 m
	Speed controller	AS420-03
	Silencer	AN200-02

Conditions

Base mounted		Series CJ2	Series CM2	Series MB/CA2	Series CS1
SY3140-01	Tubing bore x Length	T0604 x 1 m			–
	Speed controller	AS3001F-06			–
	Silencer	AN110-01			–
SY5140-02	Tubing bore x Length	T0604 x 1 m	T0806 x 1 m		–
	Speed controller	AS3001F-06	AS3001F-08		–
	Silencer	AN101-01			–
SY7140-03	Tubing bore x Length	T0604 x 1 m	T1075 x 1 m	T1209 x 1 m	–
	Speed controller	AS3001F-06	AS4001F-10		–
	Silencer	AN200-02			–
SY9140-04	Tubing bore x Length	T0604 x 1 m	T1075 x 1 m	T1209 x 1 m	
	Speed controller	AS3001F-06	AS4001F-10	AS4001F-12	
	Silencer	AN200-02			

Conditions [When using SGP (steel pipe)]

Base mounted		Series CS1
SY7140-03	Tubing bore x Length	SGP10A x 1 m
	Speed controller	AS420-03
	Silencer	AN300-03
SY9140-04	Tubing bore x Length	SGP15A x 1 m
	Speed controller	AS420-04
	Silencer	AN400-04

Valve Variations

Series			Sonic conductance C [dm³/(s·bar)] {4/2Æ5/3 (A/BÆEA/EB)}	Actuation					Voltage		Electrical entry						Note 1)
				2 position		3 position			DC	AC							
				Single	Double	Closed center	Exhaust center	Pressure center	24 V 12 V 6 V 5 V 3 V	100 V 50/60 Hz 110 V 50/60 Hz 200 V 50/60 Hz 220 V 50/60 Hz	Grommet	L plug connector	M plug connector	DIN terminal Note 4)	M8 connector	Light/surge voltage suppressor
Body ported	P.1 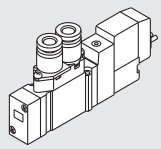	**SY3□20**	0.65	●	●	●	●	●	●	●	●	●	●	●	●	●
		SY5□20	2.4	●	●	●	●	●	●	●	●	●	●	●	●	●
		SY7□20	3.3	●	●	●	●	●	●	●	●	●	●	●	●	●
		SY9□20	8.6	●	●	●	●	●	●	●	●	●	●	●	●	●
Base mounted	P.19 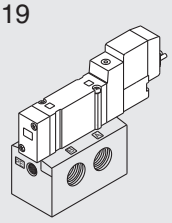	**SY3□40**	1.1	●	●	●	●	●	●	●	●	●	●	●	●	●
		SY5□40	2.8	●	●	●	●	●	●	●	●	●	●	●	●	●
		SY7□40	4.5	●	●	●	●	●	●	●	●	●	●	●	●	●
		SY9□40	10	●	●	●	●	●	●	●	●	●	●	●	●	●

Series		Manual override			Bracket	P, EA, EB port size					A, B port size														Valve option							
																One-touch fitting																
		Non-locking push type	Push-turn locking slotted type	Push-turn locking lever type		M5	1/8	1/4	3/8	1/2	M5	1/8	1/4	3/8	1/2	C4	C6	C8	C10	C12	N3	N7	N9	N11	Exhaust throttle	Oil resistant (Other than designated turbine oil)	Vacuum specifications	Low pressure specifications	Dual pressure	Enclosure IP65 Note 3)	Interface regulator	3 Port valve SY
Body ported	**SY3□20**	●	●	●	●	●	—	—	—	—	●	—	—	—	—	●	●	—	—	—	●	●	—	—	▲	▲	▲	▲	●	—	●
	SY5□20	●	●	●	●	—	●	—	—	—	—	●	—	—	—	●	●	●	—	—	●	●	●	—							●
	SY7□20	●	●	●	●	—	● (EA, EB)	● (P)	—	—	—	—	●	—	—	—	—	●	●	—	—	—	●	●								—
	SY9□20	●	●	●	—	—	—	●	—	—	—	—	●	●	—	—	—	●	●	●	—	—	●	●								—
Base mounted	**SY3□40**	●	●	●	—	—	●	—	—	—	—	●	—	—	—	—	—	—	—	—	—	—	—	—	● Sub-plate	▲	● External pilot	● External pilot	● External pilot	● DIN terminal M8 connector	●	●
	SY5□40	●	●	●	—	—	—	●	—	—	—	—	●	—	—	—	—	—	—	—	—	—	—	—							●	●
	SY7□40	●	●	●	—	—	—	●	●	—	—	—	●	●	—	—	—	—	—	—	—	—	—	—							●	—
	SY9□40	●	●	●	—	—	—	—	●	●	—	—	—	●	●	—	—	—	—	—	—	—	—	—							—	—

● Standard ● Option ▲ Made to order (Refer to page "Made to Order".)

Note 1) All AC voltage models have built-in surge voltage suppressor.

Note 2) Body ported external pilot type (made to order) is not available for DIN terminal.

Note 3) Only available for DIN terminal and M8 connector.

Note 4) SY3000 does not have a DIN terminal which can be connected to a manifold.

Manifold Variations

Manifold Variations			Valve Series	Wiring: Connection: Individual wiring	Flat ribbon cable (26 pins)	Flat ribbon cable (20 pins) connector box	Plug-in type D-sub connector (25 pins)	Plug-in type flat ribbon cable (26, 20, 10 pins)	Plug-in type terminal block (9, 18 pins)	Serial transmission unit	Common specifications: Positive common	Negative common
			5 port									
Body ported	**Bar stock type** **Individual wiring** ■ Direct piping to the main unit of a valve. Combination of different fittings is possible. 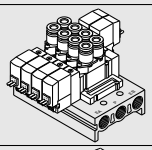	Type 20	SY3□20	●	—	—	—	—	—	—	—	—
			SY5□20									
			SY7□20									
	Bar stock type **Flat ribbon cable** ■ A 26 pins MIL connector permits One-touch wiring of external cables in a bundle. 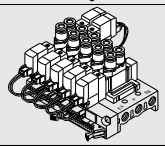	Type 20P	SY3□20	—	●	—	—	—	—	—	Note) ● In common	
			SY5□20									
			SY7□20									
	Stacking type **Individual wiring** ■ Manifold stations can be increased or decreased. 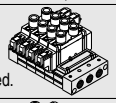	Type 23	SY9□20	●	—	—	—	—	—	—	—	—
	Stacking type **Flat ribbon cable** ■ Manifold stations can be increased or decreased. 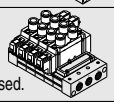	Type 23P	SY9□20	—	●	—	—	—	—	—	Note) ● In common	
	Bar stock type **EX510 gateway type** ■ Can be used with a serial transmission system. 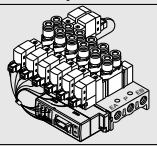	Type 20SA	SY3□20	—	—	—	—	—	—	●	—	—
			SY5□20									
			SY7□20									
	Stacking type **EX510 gateway type** ■ Can be used with a serial transmission system. 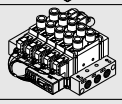	Type 23SA	SY9□20	—	—	—	—	—	—	●	—	—
	Cassette type **Individual wiring** ■ Size and weight reduced by eliminating the manifold base 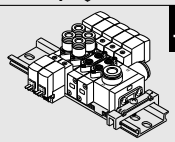	Type 60	SY3□60	●	—	—	—	—	—	—	—	—
			SY5□60	●	—	—	—	—	—	—	—	—
			SY7□60	●	—	—	—	—	—	—	—	—

● Standard ○ Option ▲ Made to order (Refer to page “Made to Order”.)

Note) When there are polarities, the positive common specifications are used.

Manifold Variations

Manifold option									A, B port size											Valve option													
Blanking plate	Individual SUP spacer	Individual EXH spacer	SUP block disk	EXH block disk	Label for block disk	Silencer for One-touch fitting	Built-in silencer	Connector	M5	1/8	1/4	3/8	One-touch fitting							Mixed mounting SY3000 SY5000	3 Port valve/Mixed mounting SY300 SY500	Oil resistant (Other than designated turbine oil)	Vacuum specifications	Low pressure specifications	Different pressure	Dual pressure	Exhaust throttle	Bundle wiring	Mixed fitting sizes	IP65 enclosure	Interface regulator	Valves with function/Vacuum release valve with restrictor
													C4	C6	C8	C10	C12	N3	N7	N9	N11												
●	●	●	—	—	—	—	—	—	●	—	—	—	●	●	—	—	—	●	●	—	—	●								Note) ●		—
									—	●	—	—	●	●	●	—	—	●	●	●	—	●	▲	—	—	○ Individual SUP interface	—	○ Individual EXH interface	—	—	Note) ●	—	●
									—	—	●	—	—	—	●	●	—	—	—	●	●	—								Note) ●		—
●	●	●	—	—	—	—	—	—	●	—	—	—	●	●	—	—	—	●	●	—	—	●											—
									—	●	—	—	●	●	●	—	—	●	●	●	—	●	▲	—	—	○ Individual SUP interface	—	○ Individual EXH interface	●	—	—	—	●
									—	—	●	—	—	—	●	●	—	—	—	●	●	—											—
●	●	●	—	—	—	—	—	—	—	—	●	●	—	—	●	●	●	—	—	●	●	—	—	▲	● External pilot	● External pilot	○ Individual SUP block disk	● External pilot	○ Individual EXH	—	—	Note) ●	—	—
●	●	●	—	—	—	—	—	—	—	—	●	●	—	—	●	●	●	—	—	●	●	—	—	▲	● External pilot	● External pilot	○ Individual SUP block disk	● External pilot	○ Individual EXH	●	—	—	—
●	●	●	—	—	—	—	—	—	●	—	—	—	●	●	—	—	—	●	●	—	—	●											—
									—	●	—	—	●	●	●	—	—	●	●	●	—	●	▲	—	—	○ Individual SUP interface	—	○ Individual EXH interface	●	—	—	—	●
									—	—	●	—	—	—	●	●	—	—	—	●	●	—							●				—
●	●	●	—	—	—	—	—	○	—	—	●	●	—	—	●	●	●	—	—	●	●	—	—	▲	● External pilot	● External pilot	○ Individual SUP block disk	● External pilot	○ Individual EXH	●	—	—	—	—
—	—	—	○	○	○	○	—	—	●	—	—	—	●	●	—	—	—	●	●	—	—	—		▲	● External pilot	● External pilot	○ Individual SUP block disk	○ Individual SUP block disk	—	—	—	Note) ●	—	—
—	—	—	○	○	○	○	—	—	—	●	—	—	●	●	●	—	—	●	●	●	—	—	—	▲	● External pilot	● External pilot	○ Individual SUP block disk	○ Individual SUP block disk	—	—	—	Note) ●	—	—
—	—	—	○	○	○	○	—	—	—	—	●	—	—	—	●	●	—	—	—	●	●	—	—	▲	● External pilot	● External pilot	○ Individual SUP block disk	○ Individual SUP block disk	—	—	—	Note) ●	—	—

Note) When using DIN terminal or M8 connector. SY3000 does not have a DIN terminal which can be connected to a manifold.

Manifold Variations

	Manifold Variations		Valve Series	Wiring								
				Connection							Common specifications	
			5 port	Individual wiring	Flat ribbon cable (26 pins)	Flat ribbon cable (20 pins) connector box	Plug-in type D-sub connector (25 pins)	Plug-in type flat ribbon cable (26, 20, 10 pins)	Plug-in type terminal block (9, 18 pins)	Serial transmission unit	Positive common	Negative common
Base mounted	**Compact bar stock type** **Individual wiring** ■ The base mounting facilitates maintenance after valves are changed.	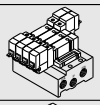	Type 41	SY3□40	●	—	—	—	—	—	—	—	—
				SY5□40									
	Compact bar stock type **Flat ribbon cable** ■ A 26 pins MIL connector permits one-touch wiring of external cables in a bundle.	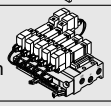	Type 41P	SY3□40	—	●	—	—	—	—	—	Note) ● In common	
				SY5□40									
	Bar stock type/Common external EXH **Individual wiring** ■ The base mounting facilitates maintenance after valves are changed. ■ Vacuum/low pressure combination system is possible.	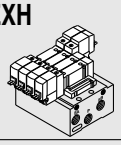	Type 42	SY3□40									
				SY5□40	●	—	—	—	—	—	—	—	—
				SY7□40									
	Bar stock type/Common external EXH **Flat ribbon cable** ■ A 26 pins MIL connector permits one-touch wiring of external cables in a bundle. ■ Vacuum/low pressure combination system is possible.	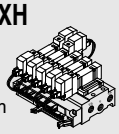	Type 42P	SY3□40									
				SY5□40	—	●	—	—	—	—	—	Note) ● In common	
				SY7□40									
	Stacking type **Individual wiring** ■ Manifold stations can be increased or decreased.	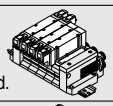	Type 43	SY9□40	●	—	—	—	—	—	—	—	—
	Stacking type **Flat ribbon cable** ■ Manifold stations can be increased or decreased.	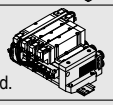	Type 43P	SY9□40	—	●	—	—	—	—	—	Note) ● In common	
	Bar stock type **EX510 gateway type** ■ Can be used with a serial transmission system.	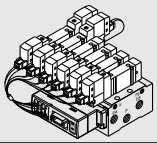	Type 42SA	SY3□40									
				SY5□40	—	—	—	—	—	—	●	—	—
				SY7□40									
	Stacking type **EX510 gateway type** ■ Can be used with a serial transmission system.	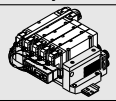	Type 43SA	SY9□40	—	—	—	—	—	—	●	—	—
	Stacking type/DIN rail mounted **Individual wiring** ■ Stations can be increased on the DIN rail. Integrated mounting of other electric parts is possible, too.	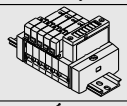	Type 45	SY3□40									
				SY5□40	●	—	—	—	—	—	—	—	—
	Stacking type/DIN rail mounted **Connector box** ■ Stations can be increased or decreased on the DIN rail. The provided connector box permits one-touch connection of electric cables.	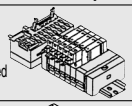	Type 45-A□NA	SY3□40									
				SY5□40	—	—	●	—	—	—	—	●	●
	Stacking type/DIN rail mounted **EX510 gateway type** ■ Can be used with a serial transmission system.	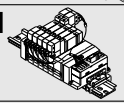	Type 45S6A	SY3□40									
				SY5□40	—	—	—	—	—	—	●	—	—
	Stacking type/DIN rail mounted **Plug-in** ■ Stations can be increased or decreased on the DIN rail. ■ A variety of centralized wiring methods are possible.	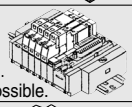	Type 45□	SY3□40									
				SY5□40	—	—	—	●	●	●	●	●	●
	Stacking type/DIN rail mounted **Plug-in** **EX510 gateway type** ■ Can be used with a serial transmission system.	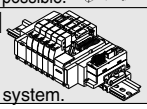	Type 45S6B	SY3□40									
				SY5□40	—	—	—	—	—	—	●	—	—

● Standard ○ Option ▲ Made to order (Refer to page "Made to Order".)

Note) When there are polarities, the positive common specifications are used.

Manifold Variations

Manifold option										A, B port size												Valve option											
														One-touch fitting																			
Blanking plate	Individual SUP spacer	Individual EXH spacer	SUP block disk	EXH block disk	Label for block disk	Silencer for One-touch fitting	Built-in silencer	Connector	M5	1/8	1/4	3/8	C4	C6	C8	C10	C12	N3	N7	N9	N11	Mixed mounting SY3000 SY5000	3 Port valve/Mixed mounting SY300 SY500	Oil resistant (Other than designated turbine oil)	Vacuum specifications	Low pressure specifications	Different pressure	Dual pressure	Exhaust throttle	Bundle wiring	Mixed fitting sizes	IP65 enclosure	Interface regulator
●	●	●	—	—	—	—	—	—	●	—	—	—	●	●	—	—	—	●	●	—	—	—	●	▲	—	—	Individual SUP interface	—	—	—	—	Note) ●	●
									—	●	—	—	—	●	●	—	—	—	●	●	—			●								Note) ●	
●	●	●	—	—	—	—	—	—	●	—	—	—	●	●	—	—	—	●	●	—	—	—	●	▲	—	—	Individual SUP interface	—	—	●	—	—	●
									—	●	—	—	—	●	●	—	—	—	●	●	—			●									
●	●	●	—	—	—	—	—	—	—	●	—	—	●	●	—	—	—	●	●	—	—	—	●	▲	● External pilot	● External pilot	Individual SUP interface	● External pilot	—	—	—	Note) ●	●
									—	—	●	—	—	●	●	—	—	—	●	●	—			●								Note) ●	
									—	—	●	—	—	—	—	●	—	—	—	—	●			—								Note) ●	
●	●	●	—	—	—	—	—	—	—	●	—	—	●	●	—	—	—	●	●	—	—	—	●	▲	● External pilot	● External pilot	Individual SUP interface	● External pilot	—	●	—	—	●
									—	—	●	—	—	●	●	—	—	—	●	●	—			●									
									—	—	●	—	—	—	—	●	—	—	—	—	●			—									
●	●	●	●	●	●	●	● P.500	—	—	—	●	●	—	—	●	●	●	—	—	●	●	—	—	▲	● External pilot	● External pilot	Individual SUP block disk	● External pilot	Individual EXH	—	●	Note) ●	
●	●	●	●	●	●	●	● P.514	—	—	—	●	●	—	—	●	●	●	—	—	●	●	—	—	▲	● External pilot	● External pilot	Individual SUP block disk	● External pilot	Individual EXH	●	●	—	—
●	●	●	—	—	—	—	—	●	—	●	—	—	●	●	—	—	—	●	●	—	—	—	●	▲	● External pilot	● External pilot	Individual SUP	● External pilot	—	—	—	—	●
									—	—	●	—	—	●	●	—	—	—	●	●	—			●									
									—	—	●	—	—	—	—	●	—	—	—	—	●			—									
●	●	●	●	●	●	●	—	●	—	—	●	●	—	—	●	●	●	—	—	●	●	—	—	▲	● External pilot	● External pilot	Individual SUP	● External pilot	Individual EXH	—	●	—	—
●	●	●	●	●	●	●	▲	—	—	—	—	—	●	●	—	—	—	●	●	—	—	▲	●	▲	▲ External pilot	▲ External pilot	Individual SUP spacer or block disk	—	—	—	—	Note) ●	●
									—	—	—	—	●	●	—	—	—	●	●	—	—		●									Note) ●	
●	●	●	●	●	●	●	▲	—	—	—	—	—	●	●	—	—	—	●	●	—	—	▲	●	▲	▲ External pilot	▲ External pilot	Individual SUP spacer or block disk	—	—	●	●	—	●
									—	—	—	—	●	●	●	—	—	●	●	●	—		●										
●	—	—	—	—	—	—	●	●	—	—	—	—	●	●	—	—	—	●	●	—	—	—	●	▲	● External pilot	● External pilot	Individual SUP spacer or block disk	—	—	●	●	—	●
									—	—	—	—	●	●	●	—	—	●	●	●	—		●										
●	●	●	●	●	●	●	▲	—	—	—	—	—	●	●	—	—	—	●	●	—	—	—	●	▲	▲ External pilot	▲ External pilot	Individual SUP spacer or block disk	—	—	●	●	—	—
									—	—	—	—	●	●	●	—	—	●	●	●	—		●										
●	●	●	●	●	●	●	●	—	—	—	—	—	●	●	—	—	—	●	●	—	—	—	●	▲	● External pilot	● External pilot	Individual SUP spacer or block disk	—	—	●	●	—	—
									—	—	—	—	●	●	●	—	—	●	●	●	—		●										

Note) When using DIN terminal or M8 connector. SY3000 does not have a DIN terminal which can be connected to a manifold.

INDEX

Cylinder Speed Chart. ····· **Font matter 1**

Valve Variations ····· **Font matter 2**

Manifold Variations ····· **Font matter 3**

5 Port Solenoid Valve

⑬Single Unit

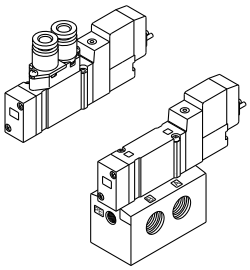

Body Ported ····· **P.1**

Base Mounted ····· **P.19**

⑬Body Ported Manifold

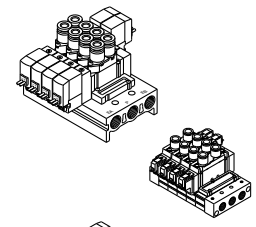

Type 20 Bar Stock Type/Individual Wiring ····· **P.37**

Type 23 Stacking Type/Individual Wiring ····· **P.43**

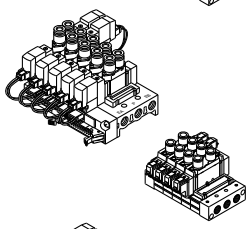

Type 20P Bar Stock Type/Flat Ribbon Cable ····· **P.47**

Type 23P Stacking Type/Flat Ribbon Cable ····· **P.53**

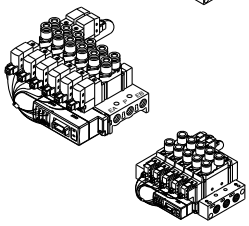

Type 20SA Bar Stock Type/EX510 Gateway-type ····· **P.55-1**

Type 23SA Stacking Type/EX510 Gateway-type ····· **P.55-7**

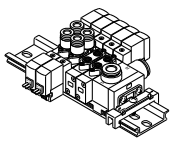

Type 60 Cassette Type/Individual Wiring ····· **P.59**

⑬ Base Mounted Manifold

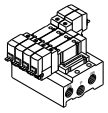
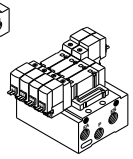

Type 41 Bar Stock Type/Compact Type/Individual Wiring ····· **P.79**

Type 42 Bar Stock Type/External Pilot Capable/Individual Wiring ····· **P.79**

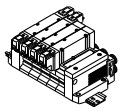
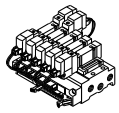

Type 43 Stacking Type/Individual Wiring ····· **P.89**

Type 41P Bar Stock Type/Compact Type/Flat Ribbon Cable ····· **P.95**

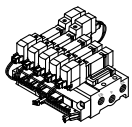
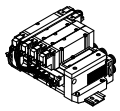

Type 42P Bar Stock Type/External Pilot Capable/Flat Ribbon Cable ····· **P.95**

Type 43P Stacking Type/Flat Ribbon Cable ····· **P.103**

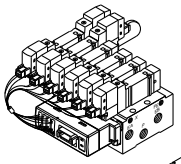
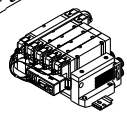

Type 42SA Bar Stock Type/EX510 Gateway-type ····· **P.108-1**

Type 43SA Stacking Type/EX510 Gateway-type ····· **P.108-6**

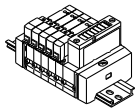
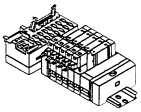

Type 45 Stacking Type/ **DIN Rail Mounted** Individual Wiring ····· **P.115**

Type 45-$^{A}_{NA}$ Stacking Type/ **DIN Rail Mounted** Connector Box ····· **P.127**

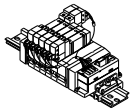
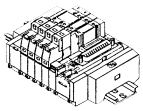

Type 45S6A Stacking Type/ **DIN Rail Mounted** EX510 Gateway-type ····· **P.134-1**

Type 45□ Stacking Type/ **DIN Rail Mounted** Plug-in ····· **P.135**

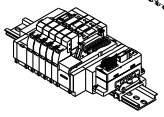

Type 45S6B Stacking Type/ **DIN Rail Mounted** EX510 Gateway-type ····· **P.176-1**

Manifold Option ····· **P.176-6**
SY300/500 3 Port Valve: Mixed Mounting Type on Manifold ····· **P.177**
Made to Order
External Pilot/Built-in Silencer ····· **P.203**
Mixed Mounting Type ····· **P.208**
M8 Connector Conforming to IEC60947-5-2 ····· **P.211**
Body Ported Vacuum Release Valve with Throttle Valve ····· **P.213**
Body Ported External Pilot/Fluororubber for Main Valve ····· **P.217**
Body Ported/Base Mounted 4-Position Dual 3-Port Valve ····· **P.217-1**
Pilot Valve Assembly/Port Block Assembly ····· **P.218**
Conforming to UL standard
30-SY3000/5000/7000/9000: 5 Port Solenoid Valve Body Ported/Single Unit ····· **P.219**
30-SY3000/5000/7000/9000: 5 Port Solenoid Valve Base Mounted/Single Unit ····· **P.220**
30-SY300/500: 3 Port Solenoid Valve Body Ported/Single Unit ····· **P.221**
30-SY300/500: 3 Port Solenoid Valve Base Mounted/Single Unit ····· **P.222**
Specific Product Precautions ····· **P.224**

5 Port Solenoid Valve
Series SY3000/5000/7000/9000
Body Ported
Single Unit

How to Order

SY 5 1 20 — 5 L — 01 — -Q

Series

3	SY3000
5	SY5000
7	SY7000
9	SY9000

Type of actuation

1	2 position single 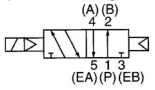
2	2 position double 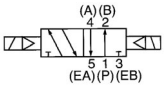
3	3 position closed center 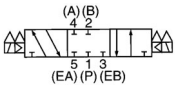
4	3 position exhaust center 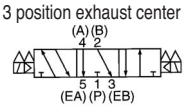
5	3 position pressure center 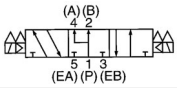

Coil specifications

-	Standard
T	With power saving circuit (24, 12 VDC only)

∗ Power saving circuit is not available in the case of D, DO or W□ type.

Rated voltage

For DC

5	24 VDC
6	12 VDC
V	6 VDC
S	5 VDC
R	3 VDC

For AC (50/60 Hz)

1	100 VAC
2	200 VAC
3	110 VAC [115 VAC]
4	220 VAC [230 VAC]

∗DC specifications of type D and DO is only available with 12 and 24 VDC.
∗AC specification is only available with D, DO type.

Electrical entry

24, 12, 6, 5, 3 VDC				24, 12 VDC/ 100, 110, 200, 220 VAC
Grommet	L plug connector	M plug connector		DIN terminal
G: Lead wire length 300 mm	L: With lead wire (Length 300 mm)	M: With lead wire (Length 300 mm)	MN: Without lead wire	D, Y: With connector
H: Lead wire length 600 mm	LN: Without lead wire	LO: Without connector	MO: Without connector	DO, YO: Without connector

24, 12, 6, 5, 3 VDC
M8 connector ∗
WO: Without connector cable
W□: With connector cable Note 1)

∗ LN, MN type: with 2 sockets.
∗ For DIN terminal of SY3000 series, refer to page 228.
∗ DIN terminal type "Y" which conforms to EN-175301-803C (former DIN43650C) is also available. For details, refer to page 227.
∗ For connector cable of M8 connector, refer to page 230.
∗ Connector M8 type "WA" conforming to IEC 60947-5-2 standard, is also available. For details, see page 211.
Note 1) Enter the cable length symbols in □. Please be sure to fill in the blank referring to page 231.

A, B port size

Thread piping

Symbol	Port size	Applicable series
M5	M5	SY3000
01	1/8	SY5000
02	1/4	SY7000
02	1/4	SY9000
03	3/8	

One-touch fitting (Metric size)

Symbol	Port size	Applicable series
C4	One-touch fitting for ø4	SY3000
C6	One-touch fitting for ø6	
C4	One-touch fitting for ø4	SY5000
C6	One-touch fitting for ø6	
C8	One-touch fitting for ø8	
C8	One-touch fitting for ø8	SY7000
C10	One-touch fitting for ø10	
C8	One-touch fitting for ø8	SY9000
C10	One-touch fitting for ø10	
C12	One-touch fitting for ø12	

One-touch fitting (Inch size)

Symbol	Port size	Applicable series
N3	One-touch fitting for ø 5/32"	SY3000
N7	One-touch fitting for ø 1/4"	
N3	One-touch fitting for ø 5/32"	SY5000
N7	One-touch fitting for ø 1/4"	
N9	One-touch fitting for ø 5/16"	
N9	One-touch fitting for ø 5/16"	SY7000
N11	One-touch fitting for ø 3/8"	
N9	One-touch fitting for ø 5/16"	SY9000
N11	One-touch fitting for ø 3/8"	

Manual override

-: Non-locking push type 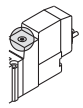

D: Push-turn locking slotted type 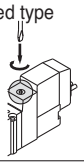

E: Push-turn locking lever type 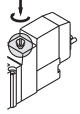

Light/surge voltage suppressor

Electrical entry for G, H, L, M, W

-	Without light/surge voltage suppressor
S	With surge voltage suppressor
Z	With light/surge voltage suppressor
R	With surge voltage suppressor (Non-polar type)
U	With light/surge voltage suppressor (Non-polar type)

∗ Power saving circuit is only available in the "Z" type.

Electrical entry for D , Y

-	Without light/surge voltage suppressor
S	With surge voltage suppressor
Z	With light/surge voltage suppressor

∗ DOZ is not available.
∗ For AC voltage valves there is no "S" option. It is already built-in to the rectifier circuit.

Bracket

-: Without bracket
F1: With foot bracket (2 position single only) 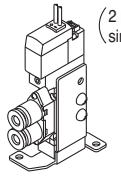

F2: With side bracket 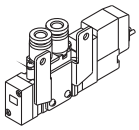

∗ SY9000 has no bracket.

Made to Order

—	—
X20	Body ported external pilot
X90	Main valve fluororubber

Thread type

-	Rc
F	G
N	NPT
T	NPTF

∗ Except for M5

Note) When placing an order for body ported solenoid valve as a single unit, mounting bolt for manifold and gasket are not attached. Order them separately, if necessary. (For details, refer to page 56.)

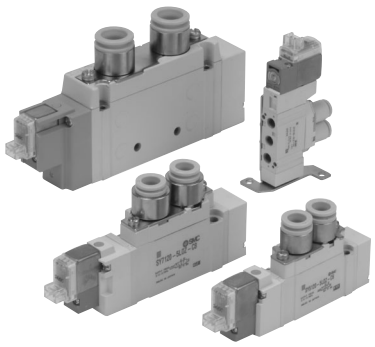

Specifications

Series		SY3000	SY5000	SY7000	SY9000
Fluid		Air			
Internal pilot Operating pressure range (MPa)	2 position single	0.15 to 0.7			
	2 position double	0.1 to 0.7			
	3 position	0.2 to 0.7			
Ambient and fluid temperature (°C)		–10 to 50 (No freezing)			
Max. operating frequency (Hz)	2 Position single, Double	10	5	5	5
	3 position	3	3	3	3
Manual override (Manual operation)		Non-locking push type, Push-turn locking slotted type, Push-turn locking lever type			
Pilot exhaust method		Common exhaust type for main and pilot valve			
Lubrication		Not required			
Mounting orientation		Unrestricted			
Impact/Vibration resistance (m/s²) Note)		150/30			
Enclosure		Dust proof (∗ DIN terminal and M8 connector: IP65)			

∗ Based on IEC60529)

Note) Impact resistance: No malfunction occurred when it is tested in the axial direction and at the right angles to the main valve and armature in both energised and de-energised states every once for each condition. (Values at the initial period)

Vibration resistance: No malfunction occurred in a one-sweep test between 45 and 2000 Hz. Test was performed at both energised and de-energised states in the axial direction and at the right angles to the main valve and armature. (Values at the initial period)

Made to Order
(For details, refer to pages 203 through 217.)

Solenoid Specifications

Electrical entry			Grommet (G), (H) L plug connector (L) M plug connector (M)	DIN terminal (D) M8 connector (W)
			G, H, L, M, W	D
Coil rated voltage (V)	DC		24, 12, 6, 5, 3	24, 12
	AC 50/60 Hz		100, 110	200, 220
Allowable voltage fluctuation (%)			10% of rated voltage *	
Power consumption (W)	DC	Standard	0.35 (With indicator light: 0.4 DIN terminal with indicator light: 0.45)	
		With power saving circuit	0.1 (With indicator light only)	
Apparent power (VA) *	AC	100 V	-	0.78 (With indicator light: 0.87)
		110 V [115 V]	- -	0.86 (With indicator light: 0.97) [0.94 (With indicator light: 1.07)]
		200 V	-	1.15 (With indicator light: 1.30)
		220 V [230 V]	- -	1.27 (With indicator light: 1.46) [1.39 (With indicator light: 1.60)]
Surge voltage suppressor			Diode (Varistor is for DIN terminal and Non-polar type.)	
Indicator light			LED (AC of DIN connector is neon light.)	

∗ In common between 110 VAC and 115 VAC, and between 220 VAC and 230 VAC.
∗ For 115 VAC and 230 VAC, the allowable voltage is –15% to +5% of rated voltage.
∗ S, Z and T type (with power saving circuit) should be used within the following allowable voltage fluctuation range due to a voltage drop caused by the internal circuit.
S and Z type: 24 VDC: –7% to +10%
12 VDC: –4% to +10%
T type: 24 VDC: –8% to +10%
12 VDC: –6% to +10%

Response Time

Note) Based on dynamic performance test, JIS B 8375-1981. (Coil temperature: 20C, at rated voltage, without surge suppressor)

SY3000

Type of actuation	Response time (ms) (at the pressure of 0.5 MPa)		
	Without light/surge voltage suppressor	With light/surge voltage suppressor	
		Type S, Z	Type R, U
2 position single	12 or less	15 or less	12 or less
2 position double	10 or less	13 or less	10 or less
3 position	15 or less	20 or less	16 or less

SY5000

Type of actuation	Response time (ms) (at the pressure of 0.5 MPa)		
	Without light/surge voltage suppressor	With light/surge voltage suppressor	
		Type S, Z	Type R, U
2 position single	19 or less	26 or less	19 or less
2 position double	18 or less	22 or less	18 or less
3 position	32 or less	38 or less	32 or less

SY7000

Type of actuation	Response time (ms) (at the pressure of 0.5 MPa)		
	Without light/surge voltage suppressor	With light/surge voltage suppressor	
		Type S, Z	Type R, U
2 position single	31 or less	38 or less	33 or less
2 position double	27 or less	30 or less	28 or less
3 position	50 or less	56 or less	50 or less

SY9000

Type of actuation	Response time (ms) (at the pressure of 0.5 MPa)		
	Without light/surge voltage suppressor	With light/surge voltage suppressor	
		Type S, Z	Type R, U
2 position single	35 or less	41 or less	35 or less
2 position double	35 or less	41 or less	35 or less
3 position	62 or less	64 or less	62 or less

Flow Characteristics/Weight

Series SY3000

Valve model	Type of actuation		Port size 1, 5, 3 (P, EA, EB)	Port size 4, 2 (A, B)	Flow characteristics 1→4/2 (P→A/B) C (kdm³/(s·bar))	b	Cv	Q[ℓ/min(ANR)]	Flow characteristics 4/2→5/3 (A/B→EA/EB) C (kdm³/(s·bar))	b	Cv	Q[ℓ/min(ANR)]	Weight (g) Gro-mmet	L/M plug connector	W M8 connector
SY3□20-□-M5	2 position	Single	M5 x 0.8	M5 x 0.8	0.61	0.44	0.16	171	0.64	0.45	0.18	181	51	53	57
		Double											68	74	82
	3 position	Closed center			0.48	0.46	0.13	137	0.47	0.43	0.13	131	71	76	84
		Exhaust center			0.47	0.42	0.13	130	0.47 (0.44)	0.41 (0.37)	0.13 (0.12)	129 (117)			
		Pressure center			0.50 (0.41)	0.48 (0.35)	0.15 (0.11)	145 (108)	0.47	0.43	0.13	131			
SY3□20-□-C4	2 position	Single		C4 (One-touch fitting for ø4)	0.72	0.29	0.18	182	0.64	0.34	0.17	167	60	63	67
		Double											78	83	91
	3 position	Closed center			0.59	0.28	0.15	148	0.59	0.30	0.15	150	81	86	94
		Exhaust center			0.63	0.35	0.16	166	0.42 (0.41)	0.34 (0.37)	0.11 (0.11)	110 (109)			
		Pressure center			0.76 (0.46)	0.42 (0.34)	0.21 (0.12)	210 (120)	0.59	0.29	0.15	149			
SY3□20-□-C6	2 position	Single		C6 (One-touch fitting for ø6)	0.76	0.30	0.19	193	0.65	0.39	0.17	176	56	59	63
		Double											74	79	87
	3 position	Closed center			0.76	0.55	0.24	233	0.60	0.33	0.16	156	77	82	90
		Exhaust center			0.65	0.32	0.16	167	0.64 (0.42)	0.31 (0.36)	0.17 (0.11)	164 (111)			
		Pressure center			0.77 (0.49)	0.34 (0.43)	0.21 (0.15)	201 (136)	0.61	0.34	0.16	159			

Note) ( ): denotes normal position.

* These values have been calculated according to ISO6358 and represent the flow rate measured in standard conditions at an upstream pressure of 0.6 MPa (relative pressure) and a differential pressure of 0.1MPa.

Series SY5000

Valve model	Type of actuation		Port size 1, 5, 3 (P, EA, EB)	Port size 4, 2 (A, B)	Flow characteristics 1→4/2 (P→A/B) C (dm³/(s·bar))	b	Cv	Q[ℓ/min(ANR)]	Flow characteristics 4/2→5/3 (A/B→EA/EB) C (dm³/(s·bar))	b	Cv	Q[ℓ/min(ANR)]	Weight (g) Gro-mmet	L/M plug connector	DIN terminal	W M8 connector
SY5□20-□-01	2 position	Single	1/8	1/8	1.9	0.35	0.49	499	2.4	0.39	0.61	648	70	72	93	76
		Double											88	93	135	101
	3 position	Closed center			1.7	0.43	0.45	473	1.8	0.35	0.46	473	93	98	140	106
		Exhaust center			1.5	0.44	0.41	420	2.5 (1.5)	0.32 (0.43)	0.59 (0.40)	644 (417)				
		Pressure center			2.2 (0.91)	0.46 (0.58)	0.61 (0.28)	626 (287)	1.8	0.38	0.46	483				
SY5□20-□-C4	2 position	Single		C4 (One-touch fitting for ø4)	0.75	0.43	0.20	209	0.85	0.64	0.30	285	94	96	117	100
		Double											111	117	159	125
	3 position	Closed center			0.74	0.40	0.19	201	0.84	0.57	0.28	263	117	122	164	130
		Exhaust center			0.75	0.36	0.19	198	0.84 (0.84)	0.64 (0.53)	0.30 (0.27)	281 (253)				
		Pressure center			0.78 (0.71)	0.44 (0.37)	0.21 (0.18)	219 (189)	0.84	0.57	0.27	263				
SY5□20-□-C6	2 position	Single		C6 (One-touch fitting for ø6)	1.5	0.33	0.33	389	2.0	0.37	0.52	533	88	91	112	95
		Double											106	111	153	119
	3 position	Closed center			1.3	0.31	0.33	333	1.6	0.32	0.39	412	111	116	158	124
		Exhaust center			1.3	0.33	0.33	337	1.8 (1.4)	0.35 (0.37)	0.44 (0.35)	473 (373)				
		Pressure center			1.7 (0.80)	0.31 (0.47)	0.42 (0.23)	435 (229)	1.7	0.33	0.44	441				
SY5□20-□-C8	2 position	Single		C8 (One-touch fitting for ø8)	1.9	0.21	0.45	458	2.3	0.29	0.57	581	80	82	103	86
		Double											98	103	145	111
	3 position	Closed center			1.6	0.29	0.39	404	1.7	0.38	0.46	456	103	108	150	116
		Exhaust center			1.4	0.38	0.39	375	2.0 (1.5)	0.37 (0.41)	0.52 (0.43)	533 (411)				
		Pressure center			2.2 (1.6)	0.32 (0.44)	0.56 (0.44)	567 (448)	1.8	0.41	0.50	493				

Note) ( ): denotes normal position.

* These values have been calculated according to ISO6358 and represent the flow rate measured in standard conditions at an upstream pressure of 0.6 MPa (relative pressure) and a differential pressure of 0.1MPa.

Series SY7000

Valve model	Type of actuation		Port size 1, 5, 3 (P, EA, EB)	Port size 4, 2 (A, B)	Flow characteristics 1→4/2 (P→A/B) C (dm³/(s·bar))	b	Cv	Q[ℓ/min(ANR)]	Flow characteristics 4/2→5/3 (A/B→EA/EB) C (dm³/(s·bar))	b	Cv	Q[ℓ/min(ANR)]	Weight (g) Gro-mmet	L/M plug connector	DIN terminal	W M8 connector
SY7□20-□-02	2 position	Single	1 (P) Port 1/4, 5, 3 (EA, EB) port 1/8	1/4	4.1	0.23	0.93	999	3.3	0.33	0.81	855	101	104	125	108
		Double											120	125	167	133
	3 position	Closed center			2.9	0.31	0.70	742	2.4	0.38	0.63	644	128	133	175	141
		Exhaust center			2.5	0.39	0.65	675	3.4 (2.1)	0.35 (0.38)	0.82 (0.54)	893 (563)				
		Pressure center			4.3 (2.4)	0.23 (0.32)	0.97 (0.61)	1048 (618)	2.2	0.39	0.58	594				
SY7□20-□-C8	2 position	Single		C8 One-touch fitting for ø8	3.2	0.26	0.77	794	3.2	0.37	0.82	852	107	110	131	114
		Double											126	132	174	140
	3 position	Closed center			2.6	0.24	0.63	637	2.4	0.31	0.62	614	134	140	182	148
		Exhaust center			2.4	0.25	0.57	592	2.6 (1.9)	0.42 (0.46)	0.70 (0.56)	718 (541)				
		Pressure center			3.3 (2.4)	0.28 (0.22)	0.78 (0.57)	829 (581)	2.2	0.34	0.60	574				
SY7□20-□-C10	2 position	Single		C10 One-touch fitting for ø10	3.8	0.26	0.86	943	3.2	0.34	0.82	835	103	105	126	109
		Double											122	127	169	135
	3 position	Closed center			2.8	0.27	0.67	699	2.4	0.21	0.59	578	130	135	177	143
		Exhaust center			2.5	0.25	0.59	616	2.7 (2.0)	0.38 (0.38)	0.70 (0.56)	724 (536)				
		Pressure center			3.8 (2.4)	0.25 (0.31)	0.89 (0.61)	937 (614)	2.3	0.38	0.61	617				

Note) ( ): denotes normal position.

* These values have been calculated according to ISO6358 and represent the flow rate measured in standard conditions at an upstream pressure of 0.6 MPa (relative pressure) and a differential pressure of 0.1MPa.

Series SY9000

Valve model	Type of actuation		Port size 1, 5, 3 (P, EA, EB)	Port size 4, 2 (A, B)	Flow characteristics 1→4/2 (P→A/B) C (dm³/(s·bar))	b	Cv	Q[ℓ/min(ANR)]	Flow characteristics 4/2→5/3 (A/B→EA/EB) C (dm³/(s·bar))	b	Cv	Q[ℓ/min(ANR)]	Weight (g) Gro-mmet	L/M plug connector	DIN terminal	W M8 connector
SY9□20-□-02	2 position	Single	1/4	1/4	7.0	0.33	1.7	1815	7.6	0.35	2.0	1997	241	244	265	248
		Double											260	266	308	274
	3 position	Closed center			6.7	0.37	1.7	1784	6.4	0.34	1.6	1670	284	290	332	298
		Exhaust center			6.4	0.36	1.6	1693	8.3 (4.1)	0.41 (0.27)	2.2 (0.91)	2274 (1023)				
		Pressure center			8.0 (3.2)	0.27 (0.34)	1.8 (0.76)	1997 (835)	6.5	0.22	1.4	1575				
SY9□20-□-03	2 position	Single		3/8	8.0	0.29	1.9	2021	8.0	0.33	2.0	2074	236	239	260	243
		Double											255	261	303	269
	3 position	Closed center			7.9	0.33	1.9	2048	6.6	0.27	1.6	1647	279	285	327	293
		Exhaust center			8.0	0.33	1.9	2074	8.7 (8.3)	0.34 (0.40)	2.2 (2.3)	2270 (2258)				
		Pressure center			8.9 (3.3)	0.34 (0.40)	2.2 (0.82)	2323 (898)	6.5	0.25	1.5	1603				
SY9□20-□-C8	2 position	Single		C8 One-touch fitting for ø8	4.3	0.28	0.96	1080	7.1	0.32	1.7	1829	293	296	317	300
		Double											312	318	360	326
	3 position	Closed center			4.3	0.31	0.99	1100	6.1	0.28	1.4	1532	336	342	384	350
		Exhaust center			4.3	0.3	0.99	1093	7.4 (3.8)	0.36 (0.29)	1.9 (0.86)	1957 (960)				
		Pressure center			4.4 (3.2)	0.35 (0.26)	1.0 (0.71)	1156 (794)	2.1	0.41	0.53	575				
SY9□20-□-C10	2 position	Single		C10 One-touch fitting for ø10	6.1	0.28	1.4	1532	7.9	0.33	1.9	2048	279	282	303	286
		Double											298	304	346	312
	3 position	Closed center			5.9	0.30	1.4	1500	6.5	0.26	1.5	1612	322	328	370	336
		Exhaust center			5.8	0.25	1.3	1430	8.4 (4.1)	0.33 (0.27)	2.0 (0.93)	2178 (1023)				
		Pressure center			6.3 (3.2)	0.29 (0.29)	1.5 (0.72)	1592 (809)	6.4	0.25	1.5	1578				
SY9□20-□-C12	2 position	Single		C12 One-touch fitting for ø12	7.0	0.25	1.6	1726	8.6	0.41	2.2	2356	265	268	289	272
		Double											284	290	332	298
	3 position	Closed center			6.9	0.24	1.6	1691	7.0	0.33	1.7	1815	308	314	356	322
		Exhaust center			6.6	0.23	1.4	1608	9.4 (4.5)	0.48 (0.32)	2.6 (1.0)	2718 (1159)				
		Pressure center			7.4 (3.2)	0.25 (0.34)	1.7 (0.74)	1825 (835)	6.6	0.23	1.5	1608				

Note) ( ): denotes normal position.

* These values have been calculated according to ISO6358 and represent the flow rate measured in standard conditions at an upstream pressure of 0.6 MPa (relative pressure) and a differential pressure of 0.1MPa.

Construction

Series SY

JIS Symbol
2 position single

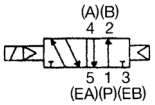

2 position single

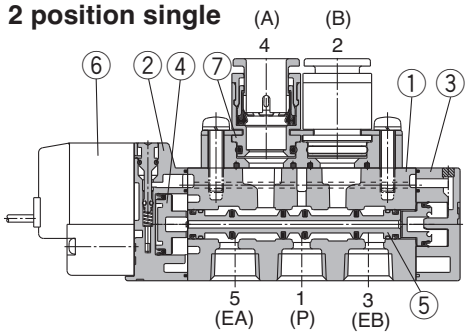

JIS Symbol
2 position double

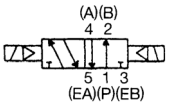

2 position double

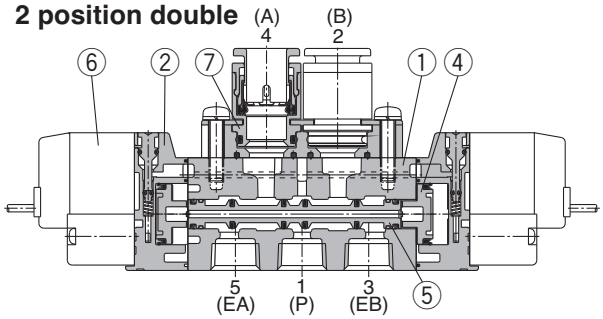

Symbol

3 position closed center

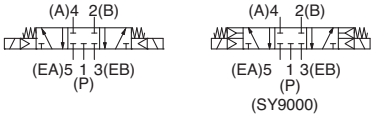

3 position exhaust center

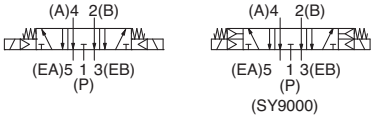

3 position pressure center

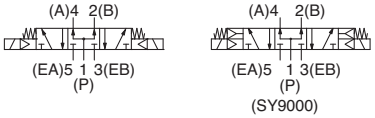

3 position closed center / exhaust center / pressure center

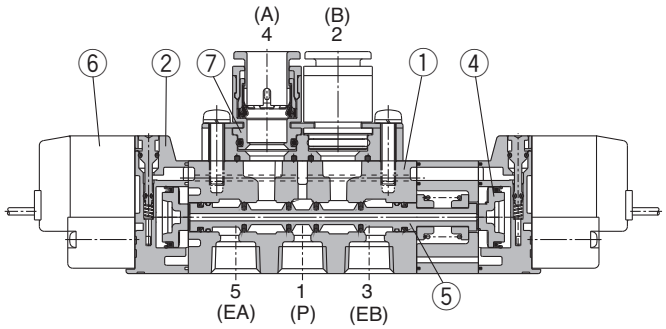

(This figure shows a closed center type.)

Component Parts

No.	Description	Material	Note
1	Body	Aluminum die-casted (SY3000: Zinc die-casted)	White
2	Adapter plate	Resin	White (SY9000: Gray)
3	End plate	Resin	White
4	Piston	Resin	–
5	Spool valve assembly	Aluminum, HNBR	–

Replacement Parts

No.	Description	No.
6	Pilot valve assembly	Refer to "How to Order Pilot Valve Assembly" on page 218.
7	M5 port block assembly	Refer to "How to Order Port Block Assembly" on page 218.

Bracket Assembly No.

Description	No.
Bracket (For F1)	SX$^{3}_{5}_{7}$000-16-2A (with mounting screw)
Bracket (For F2)	SX$^{3}_{5}_{7}$000-16-1A (with mounting screw)

∗ SY9000 has no bracket.

How to Change Port Block Assembly

If using body port type, both A and B port sizes can be changed by replacing the port block assembly mounted on the body. When changing this block assembly, the correct screw torque must be achieved to avoid possible air leakage.

For SY5000

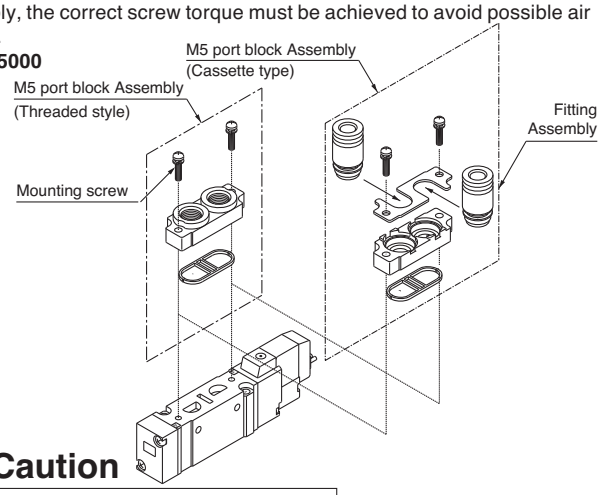

⚠ Caution

Mounting screw tightening torques

SY3000 (M2): 0.12 N·m
SY$^{5}_{7}$000 (M3): 0.6 N·m
SY9000 (M4): 1.4 N·m

Dimensions: Series SY3000

2 position single

Grommet (G), (H): SY3120-□$^{G}_{H}$□□-$^{C4, N3}_{C6, N7}$(-F2)-Q

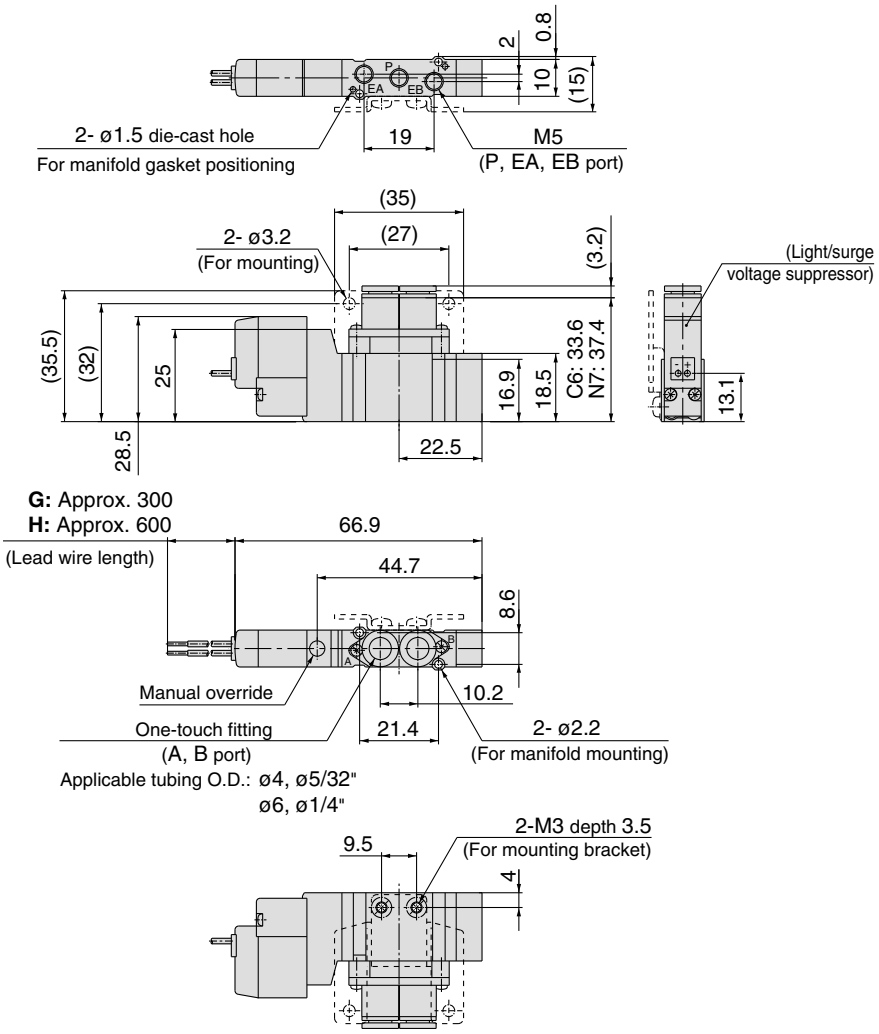

Foot bracket

SY3120-□$^{G}_{H}$□□-$^{C4, N3}_{C6, N7}$-F1-Q

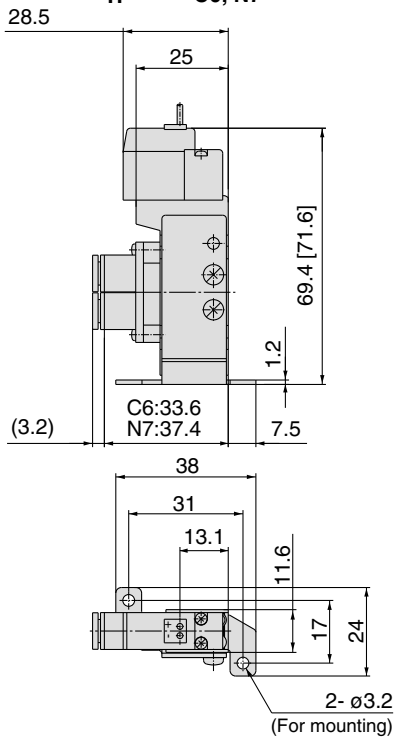

SY3120-□$^{G}_{H}$□□-M5(-F2)-Q

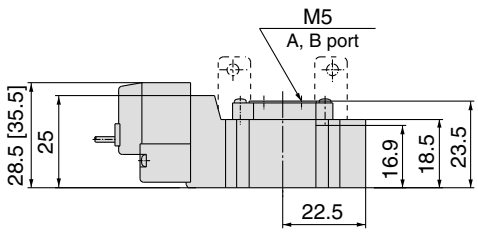

L plug connector (L):

SY3120-□L□□-$^{C4, N3}_{C6, N7}$(-F$^{1}_{2}$)-Q

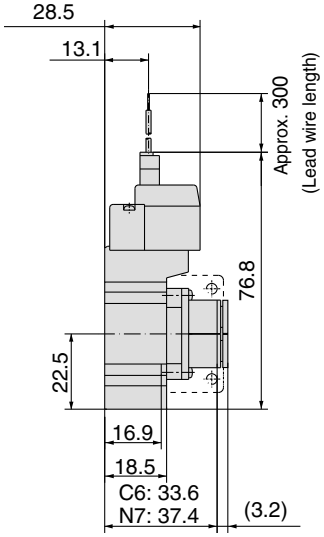

M plug connector (M):

SY3120-□M□□-$^{C4, N3}_{C6, N7}$(-F$^{1}_{2}$) -Q

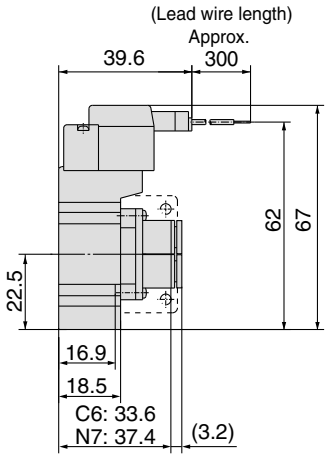

M8 connector (WO):

SY3120-□WO□□-$^{C4, N3}_{C6, N7}$(-F$^{1}_{2}$) -Q

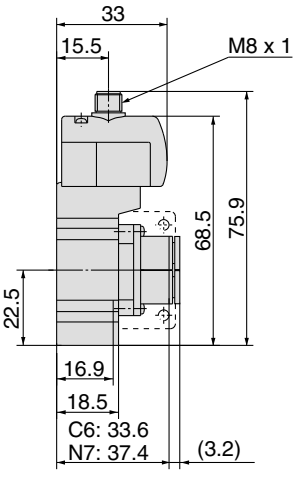

Note) Refer to back page 12 for dimensions of connector types.

Dimensions: Series SY3000

2 position double

Grommet (G), (H): SY3220-□ G/H □□-C4, N3 / C6, N7 (-F2)-Q

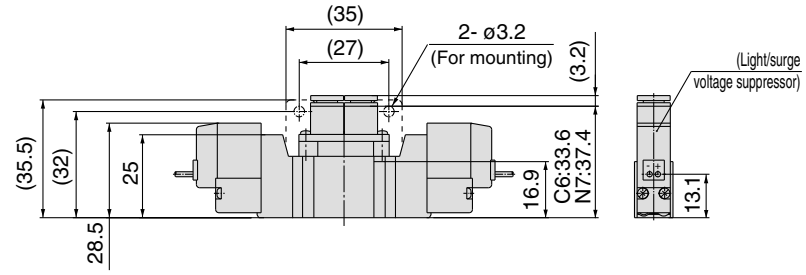

G: Approx. 300
H: Approx. 600

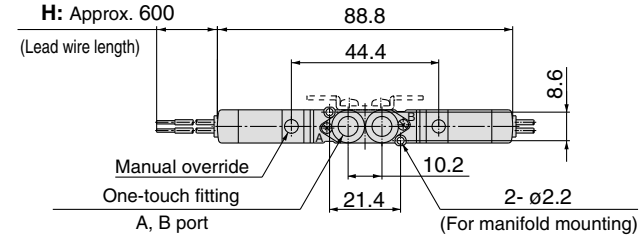

Applicable tubing O.D.: ø4, ø5/32"
: ø6, ø1/4"

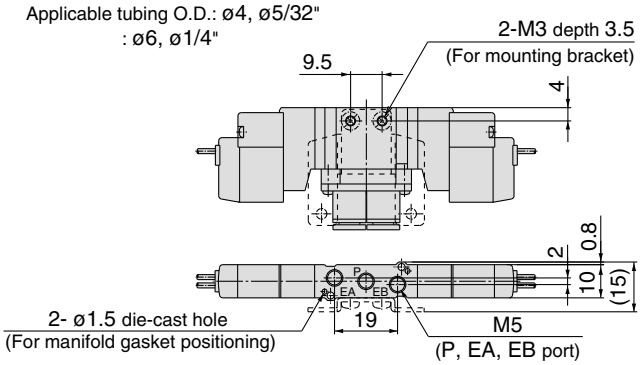

SY3220-□ G/H □□-M5(-F2)-Q

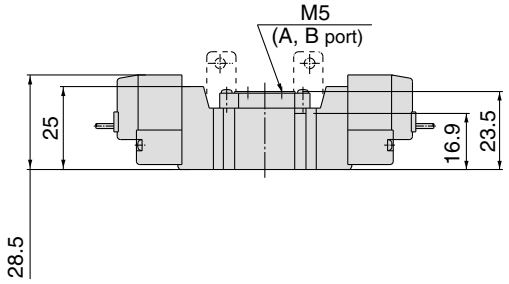

L plug connector (L):
SY3220-□L□□-C4, N3 / C6, N7 (-F2 1)-Q

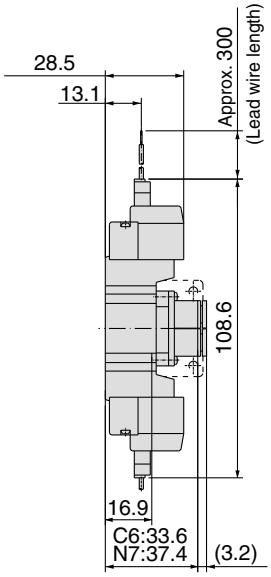

M plug connector (M):
SY3220-□M□□-C4, N3 / C6, N7 (-F2 1) -Q

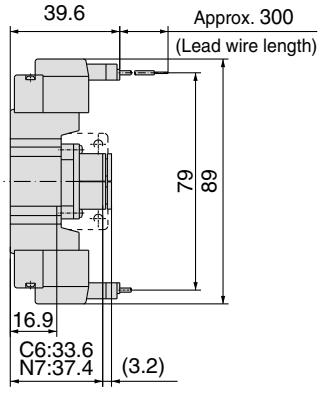

M8 connector (WO):
SY3220-WO□□-C4, N3 / C6, N7 (-F2 1) -Q

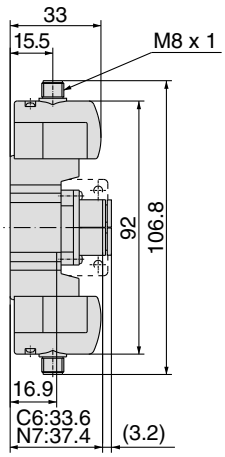

Note) Refer to back page 12 for dimensions of connector types.

Dimensions: Series SY3000

3 position closed center / exhaust center / pressure center
Grommet (G), (H): SY3$^{3}_{4}{}^{5}$20-□$^{G}_{H}$□□-$^{C4,\ N3}_{C6,\ N7}$(-F2)-Q

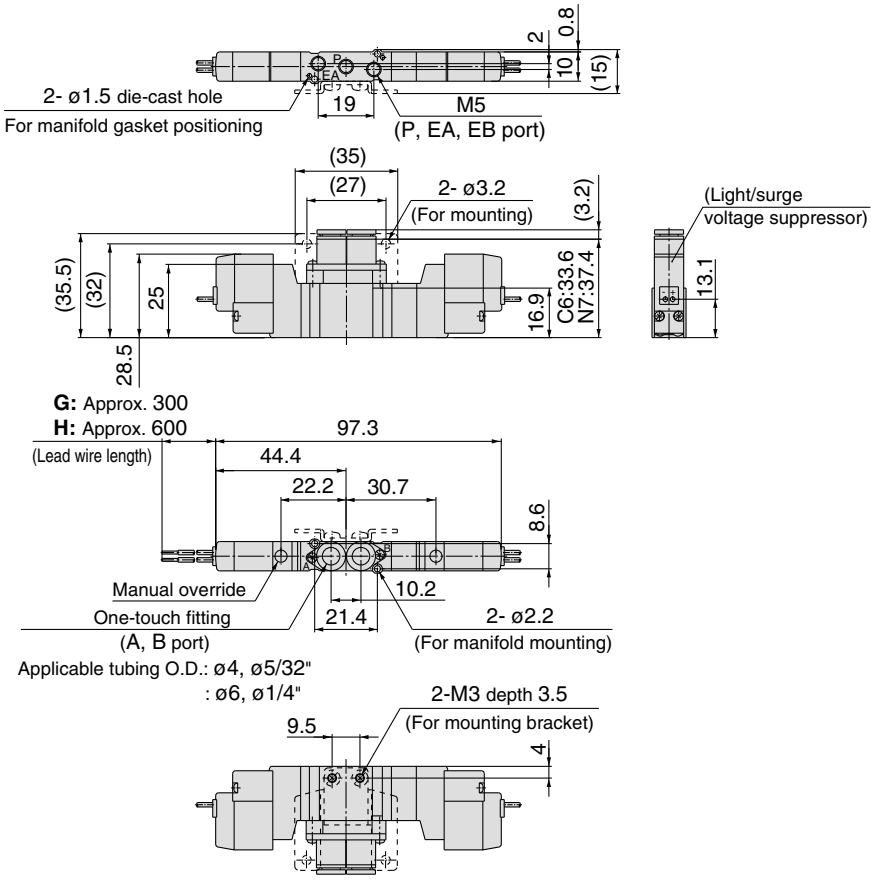

SY3$^{3}_{4}{}^{5}$20-□$^{G}_{H}$□□-M5(-F2)-Q

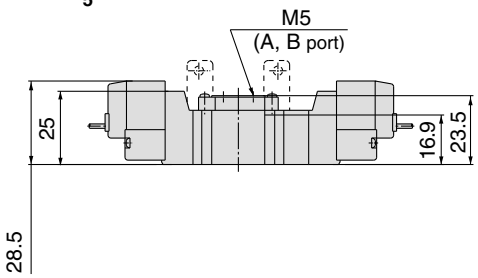

L plug connector (L):
SY3$^{3}_{4}{}^{5}$20-□L□□-$^{C4,\ N3}_{C6,\ N7}$(-F2)-Q

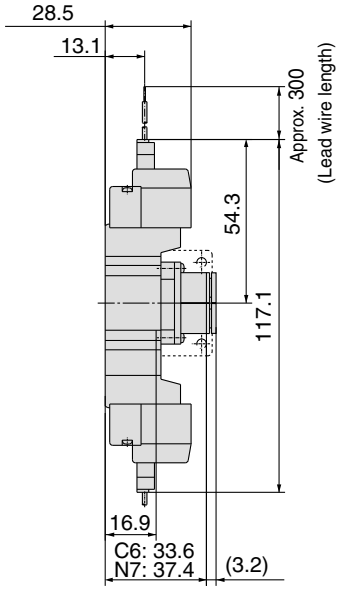

M plug connector (M):
SY3$^{3}_{4}{}^{5}$20-□M□□-$^{C4,\ N3}_{C6,\ N7}$(-F2)-Q

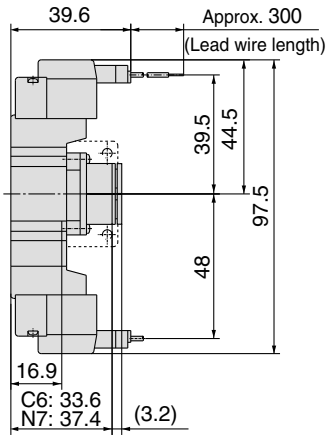

M8 connector (WO):
SY3$^{3}_{4}{}^{5}$20-□WO□□-$^{C4,\ N3}_{C6,\ N7}$(-F2)-Q

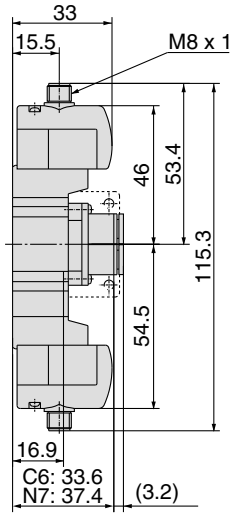

Note) Refer to back page 12 for dimensions of connector types.

Dimensions: Series SY5000

2 position single

Grommet (G), (H): SY5120-□$^{G}_{H}$□□-$^{C4, N3}_{C6, N7, C8, N9}$□(-F2)-Q

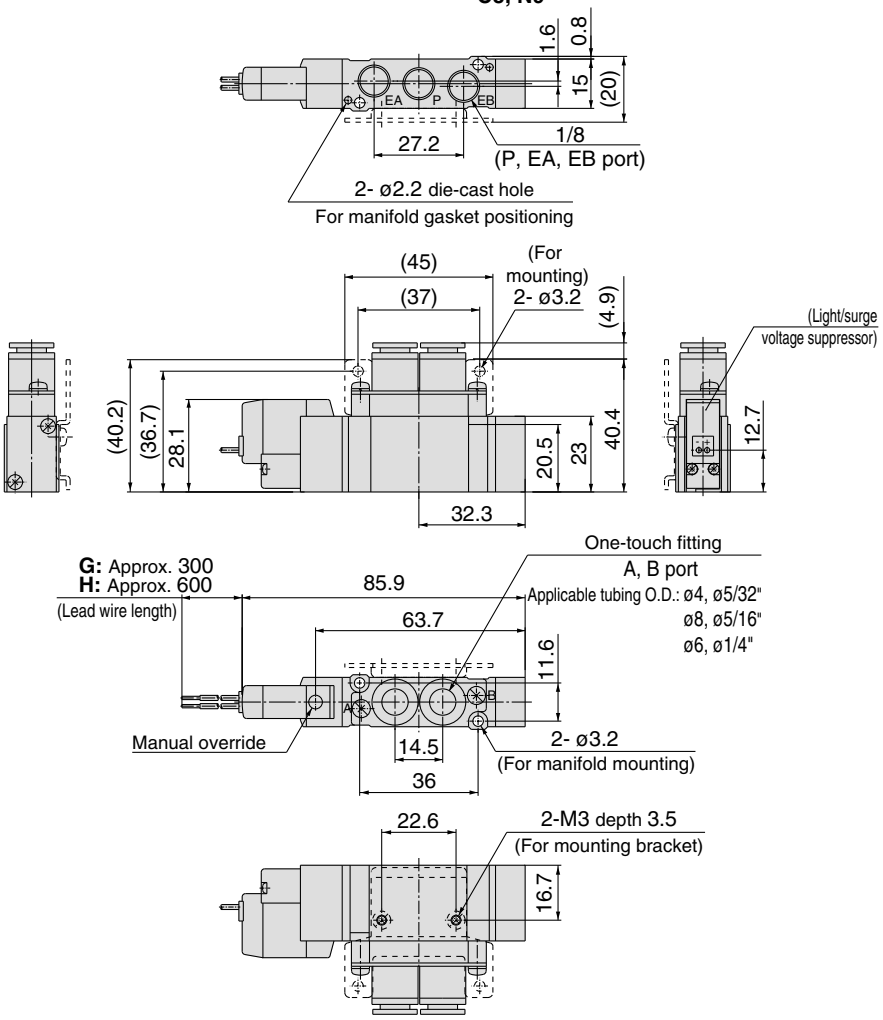

Foot bracket

SY5120-□$^{G}_{H}$□□-$^{C4, N3}_{C6, N7, C8, N9}$□-F1-Q

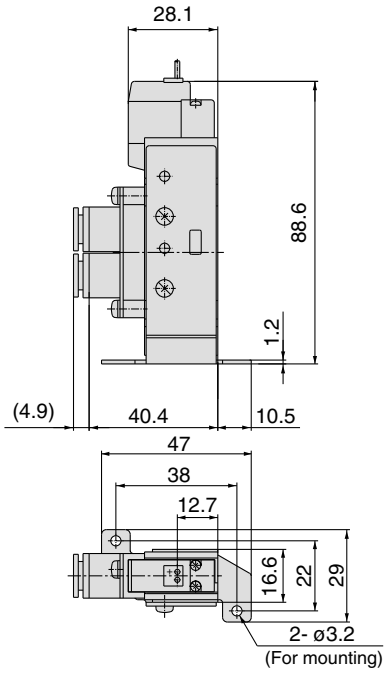

SY5120-□$^{G}_{H}$□□-01□(-F$^{1}_{2}$)-Q

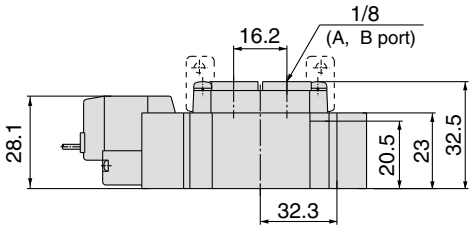

L plug connector: L

SY5120-□L□□-$^{C4, N3}_{C6, N7, C8, N9}$□(-F$^{1}_{2}$)-Q

M plug connector: M

SY5120-□M□□-$^{C4, N3}_{C6, N7, C8, N9}$□(-F$^{1}_{2}$)-Q

DIN terminal (D):

SY5120-□D□□-$^{C4, N3}_{C6, N7, C8, N9}$□(-F$^{1}_{2}$)-Q

M8 connector (WO):

SY5120-□WO□□-$^{C4, N3}_{C6, N7, C8, N9}$□(-F$^{1}_{2}$)-Q

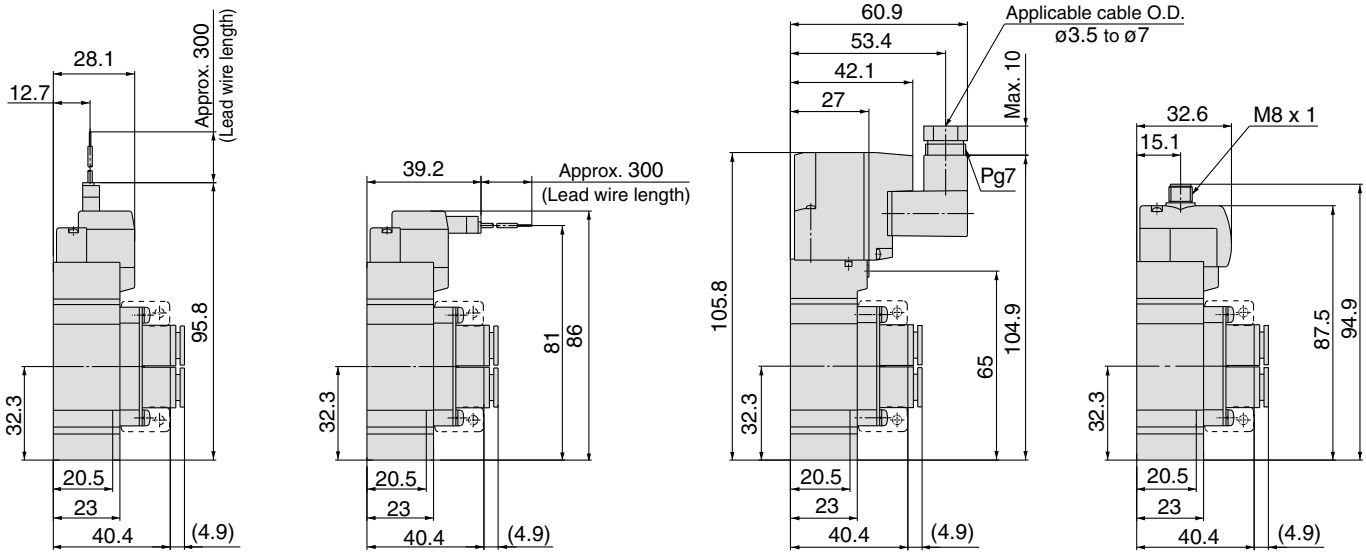

Note) Refer to back page 12 for dimensions of connector types.

Dimensions: Series SY5000

2 position double

Grommet (G), (H): SY5220-□ G/H □□-C4, N3 / C6, N7 / C8, N9 □(-F2)-Q

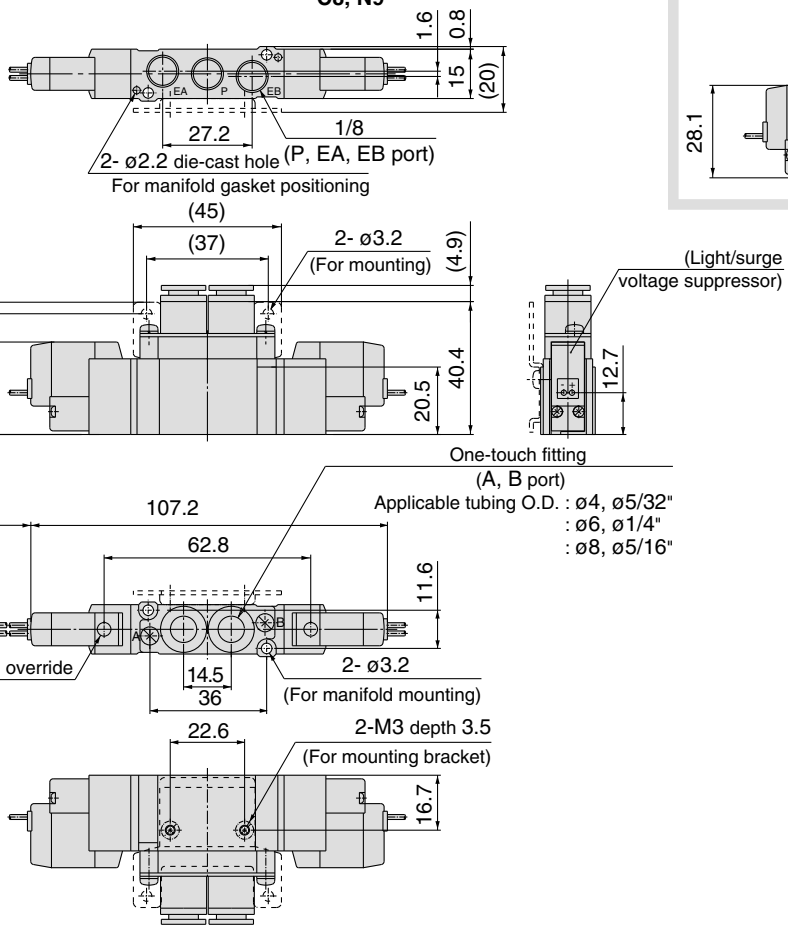

SY5220-□ G/H □□-01□(-F2)-Q

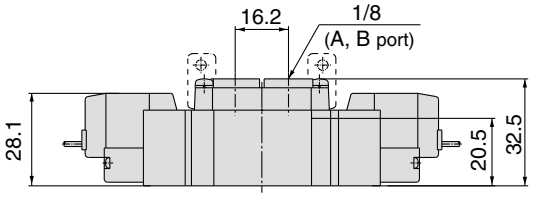

L plug connector (L): **SY5220-□L□□-C4, N3 / C6, N7 / C8, N9 □(-F2)-Q**

M plug connector (M): **SY5220-□M□□-C4, N3 / C6, N7 / C8, N9 □(-F2)-Q**

DIN terminal (D): **SY5220-□D□□-C4, N3 / C6, N7 / C8, N9 □(-F2)-Q**

M8 connector (WO): **SY5220-□WO□□-C4, N3 / C6, N7 / C8, N9 □(-F2)-Q**

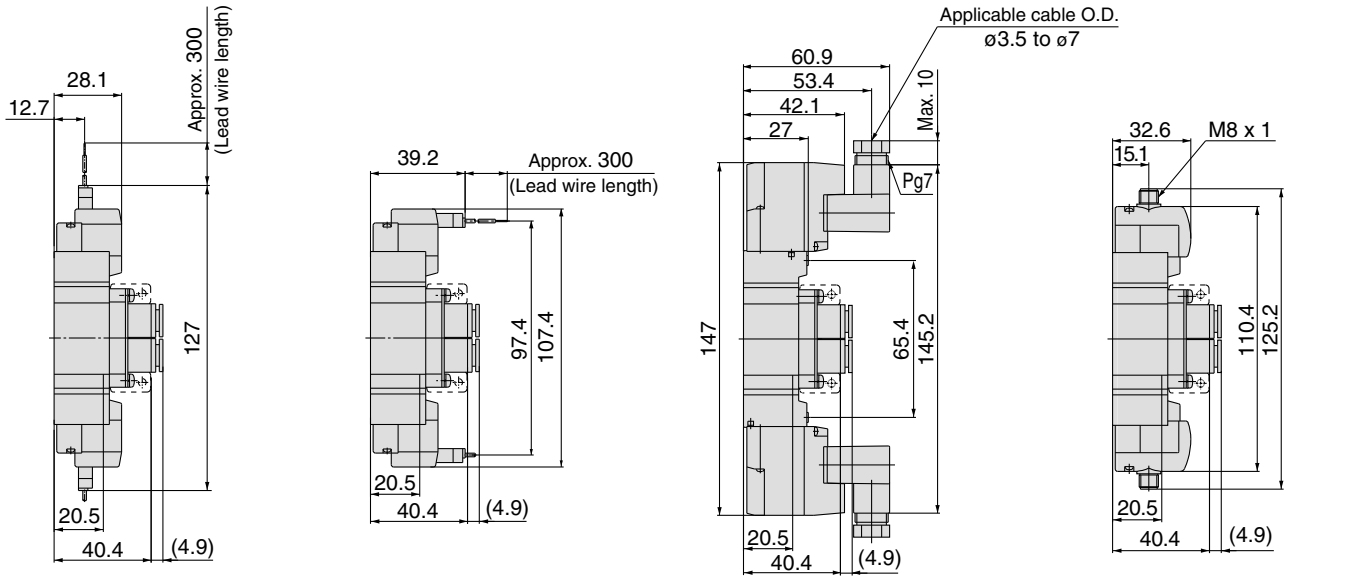

Note) Refer to back page 12 for dimensions of connector types.

Dimensions: Series SY5000

3 position closed center / exhaust center / pressure center

Grommet (G), (H): SY5$^{3}_{5}$4$^{G}_{H}$20-□□□-C4, N3, C6, N7, C8, N9□(-F2)-Q

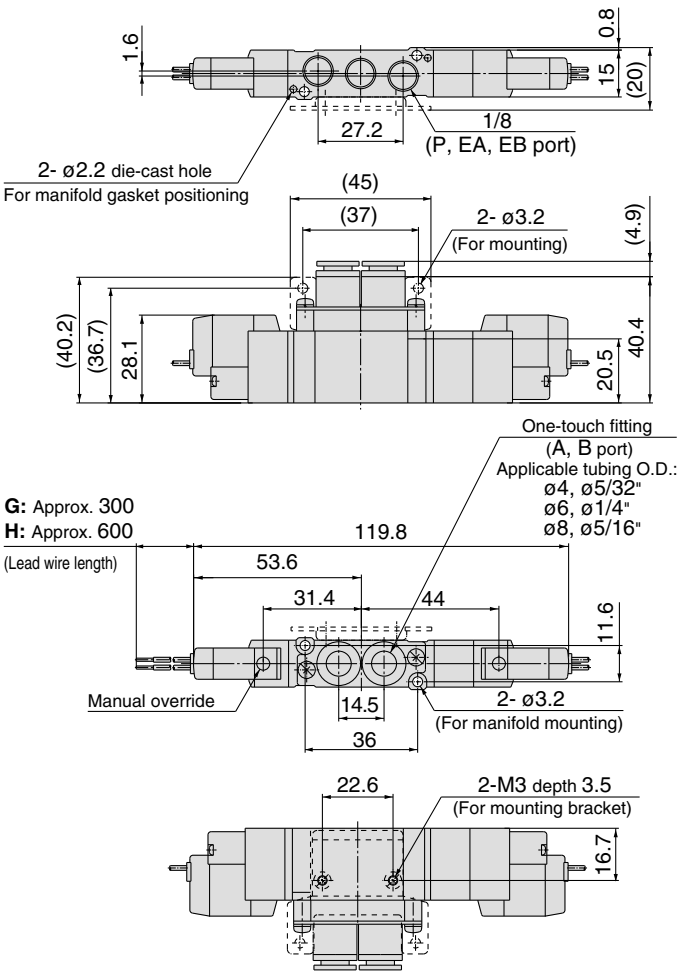

SY5$^{3}_{5}$4$^{3}_{4}$20-□$^{3}_{5}$□□-01□(-F2)-Q

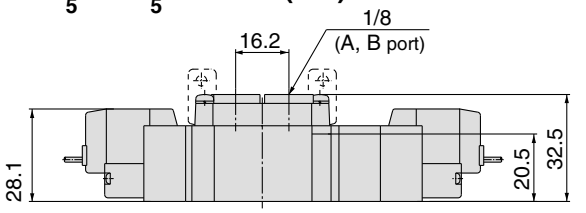

L plug connector (L):

SY5$^{3}_{5}$4$^{}_{}$20-□L□□-C4, N3, C6, N7, C8, N9□(-F2)-Q

M plug connector (M):

SY5$^{3}_{5}$4$^{}_{}$20-□M□□-C4, N3, C6, N7, C8, N9□(-F2)-Q

DIN terminal (D):

SY5$^{3}_{5}$4$^{}_{}$20-□D□□-C4, N3, C6, N7, C8, N9□(-F2)-Q

M8 connector (WO):

SY5$^{3}_{5}$4$^{}_{}$20-□WO□□-C4, N3, C6, N7, C8, N9□(-F2)-Q

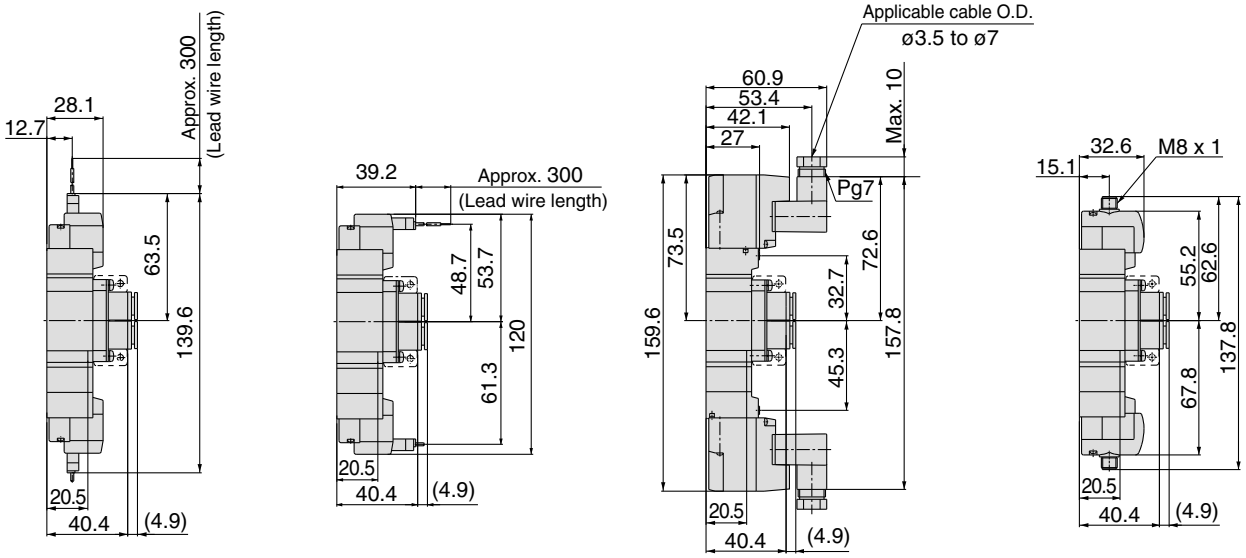

Note) Refer to back page 12 for dimensions of connector types.

Dimensions: Series SY7000

2 position single

Grommet (G), (H): SY7120-□$^{G}_{H}$□□-$^{C8, N9}_{C10, N11}$□(-F2)-Q

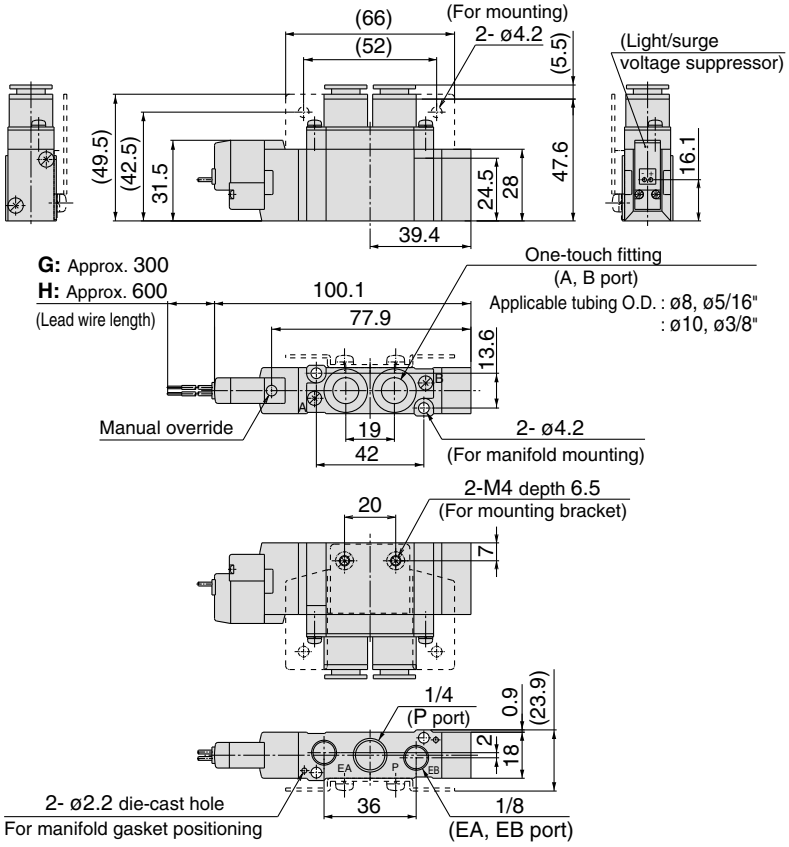

SY7120-□$^{G}_{H}$□-$^{C8, N9}_{C10, N11}$□-F1-Q

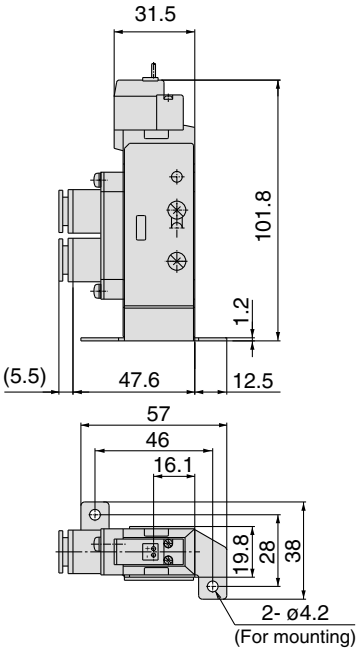

SY7120-□$^{G}_{H}$□□-02□(-F2)-Q

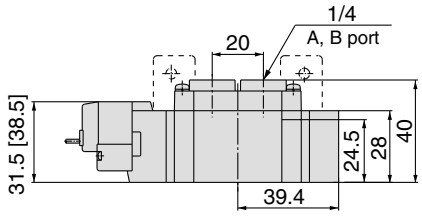

L plug connector (L): SY7120-□L□□-$^{C8, N9}_{C10, N11}$□(-F$^{1}_{2}$)-Q

M plug connector (M): SY7120-□M□□-$^{C8, N9}_{C10, N11}$□(-F$^{1}_{2}$)-Q

DIN terminal (D): SY7120-□D□□-$^{C8, N9}_{C10, N11}$□(-F$^{1}_{2}$)-Q

M8 connector (WO): SY7120-□WO□□-$^{C8, N9}_{C10, N11}$□(-F$^{1}_{2}$)-Q

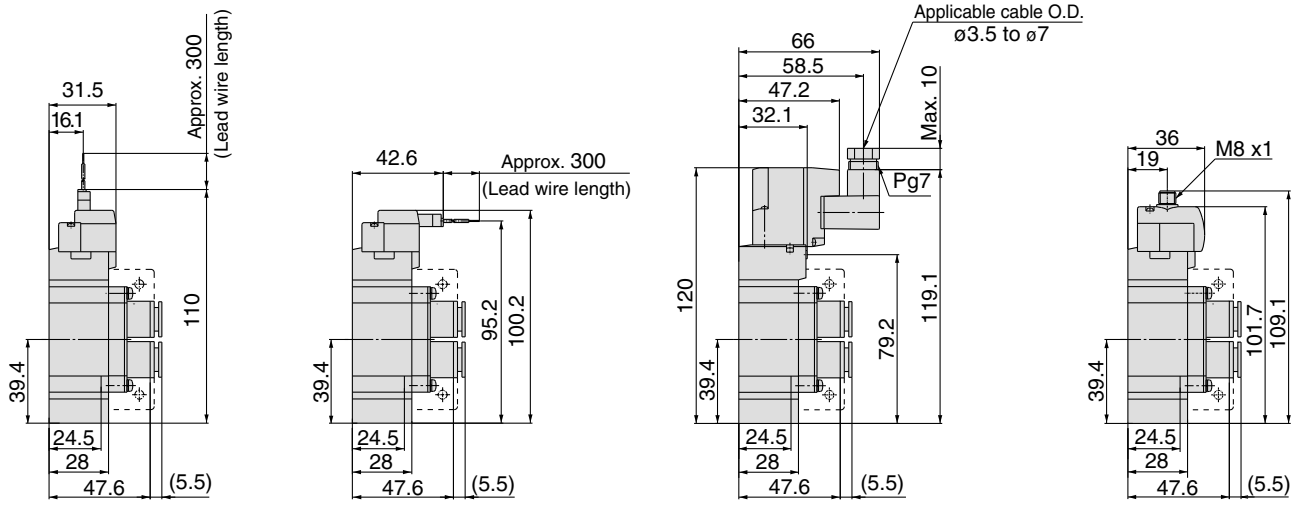

Note) Refer to back page 12 for dimensions of connector types.

Dimensions: Series SY7000

2 position double

Grommet (G), (H): SY7220-□$^{G}_{H}$□□-$^{C8, N9}_{C10, N11}$□(-F2)-Q

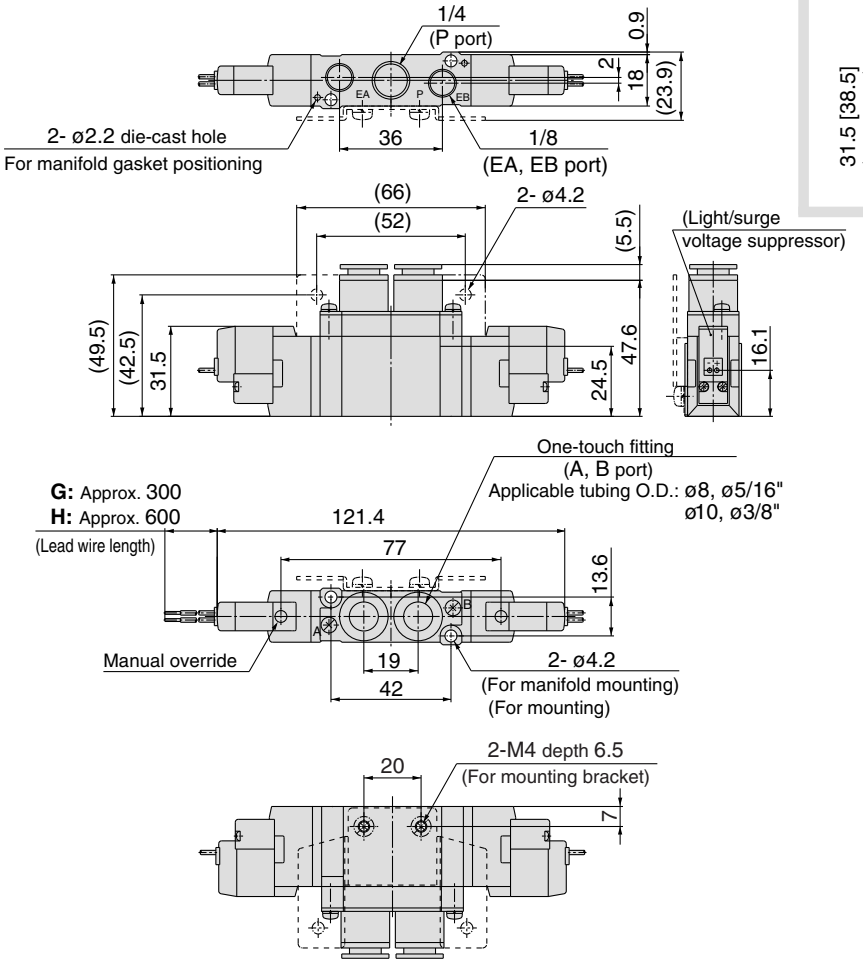

SY7220-□$^{G}_{H}$□□-02□(-F2)-Q

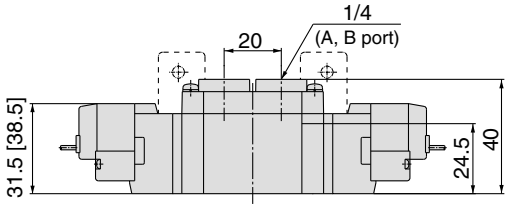

L plug connector (L):
SY7220-□L□□-$^{C8, N9}_{C10, N11}$□(-F2)-Q

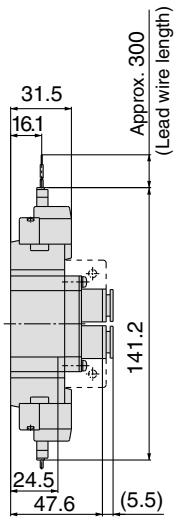

M plug connector (M):
SY7220-□M□□-$^{C8, N9}_{C10, N11}$□(-F2)-Q

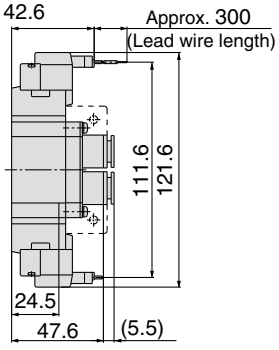

DIN terminal (D):
SY7220-□D□□-$^{C8, N9}_{C10, N11}$□(-F2)-Q

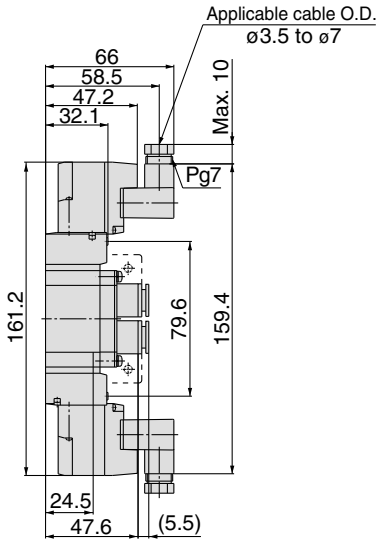

M8 connector (WO):
SY7220-□WO□□-$^{C8, N9}_{C10, N11}$□(-F2)-Q

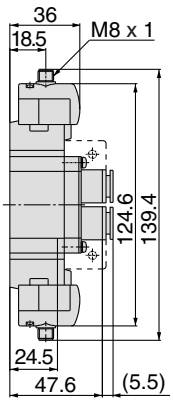

Note) Refer to back page 12 for dimensions of connector types.

Dimensions: Series SY7000

3 position closed center / exhaust center / pressure center

Grommet (G), (H): SY7$^{3}_{5}$20-□$^{G}_{H}$□□-$^{C8, N9}_{C10, N11}$□(-F2)-Q

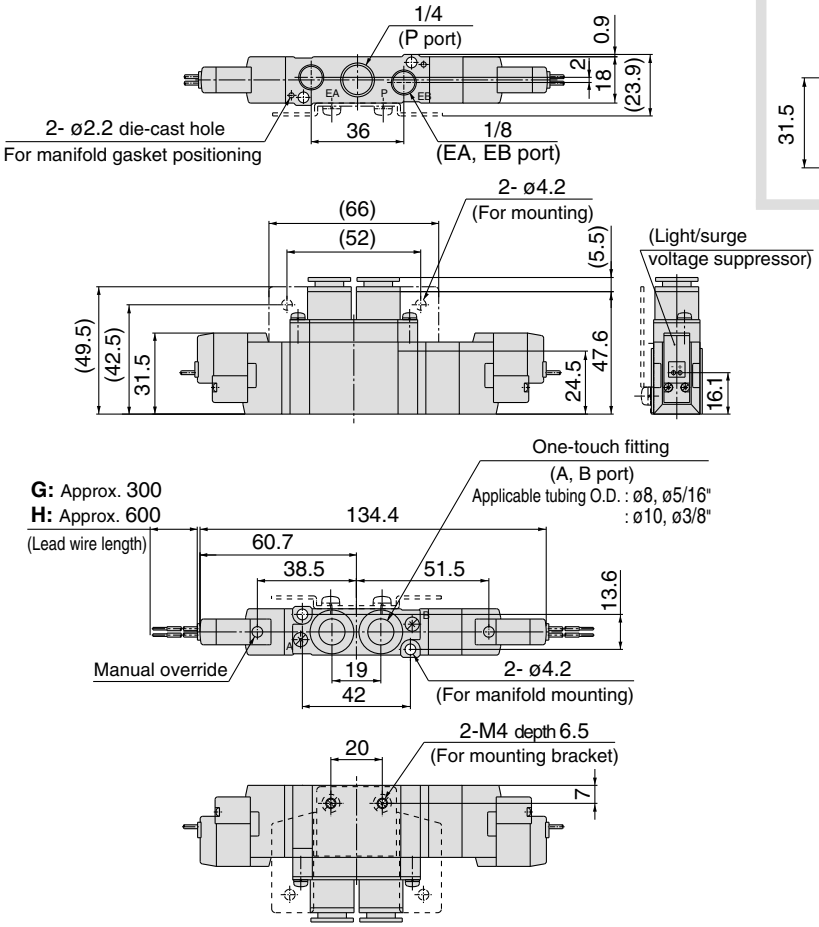

SY7$^{3}_{5}$20-□$^{G}_{H}$□□-02□(-F2)-Q

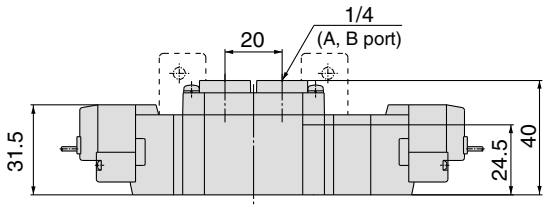

L plug connector (L):

SY7$^{3}_{5}$20-□L□□-$^{C8, N9}_{C10, N11}$□(-F2)-Q

M plug connector (M):

SY7$^{3}_{5}$20-□M□□-$^{C8, N9}_{C10, N11}$□(-F2)-Q

DIN terminal (D):

SY7$^{3}_{5}$20-□D□□-$^{C8, N9}_{C10, N11}$□(-F2)-Q

M8 connector (WO):

SY7$^{3}_{5}$20-□WO□□-$^{C8, N9}_{C10, N11}$□(-F2)-Q

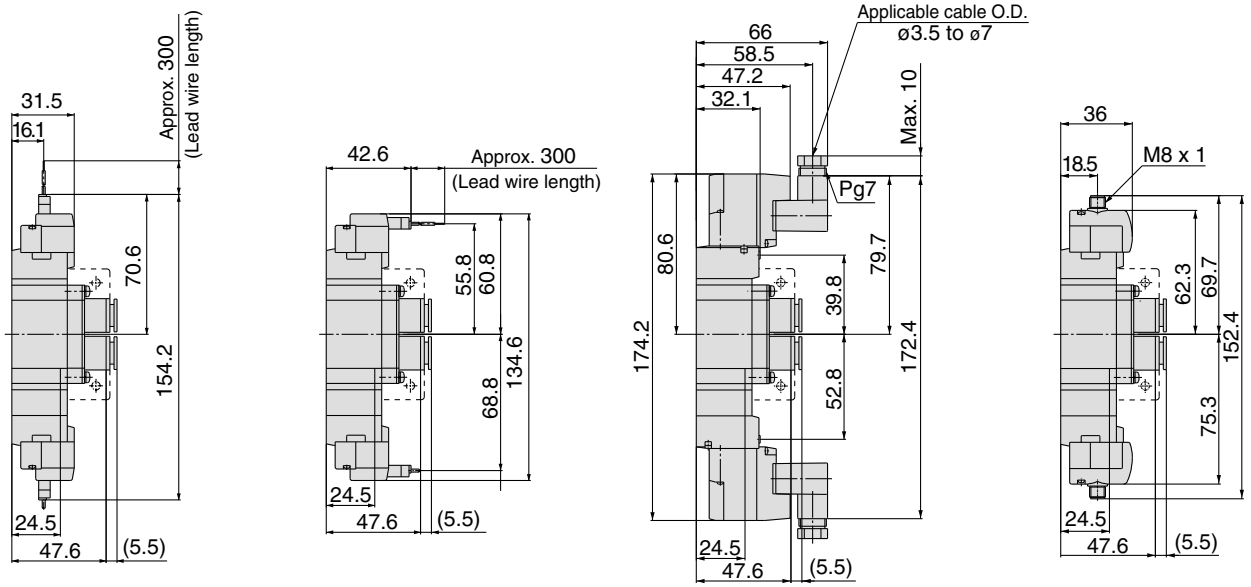

Note) Refer to back page 12 for dimensions of connector types.

Dimensions: Series SY9000

2 position single
Grommet (G), (H): SY9120-□$^{G}_{H}$□□-$^{C8, N9}_{C10, N11}$□-Q
C12

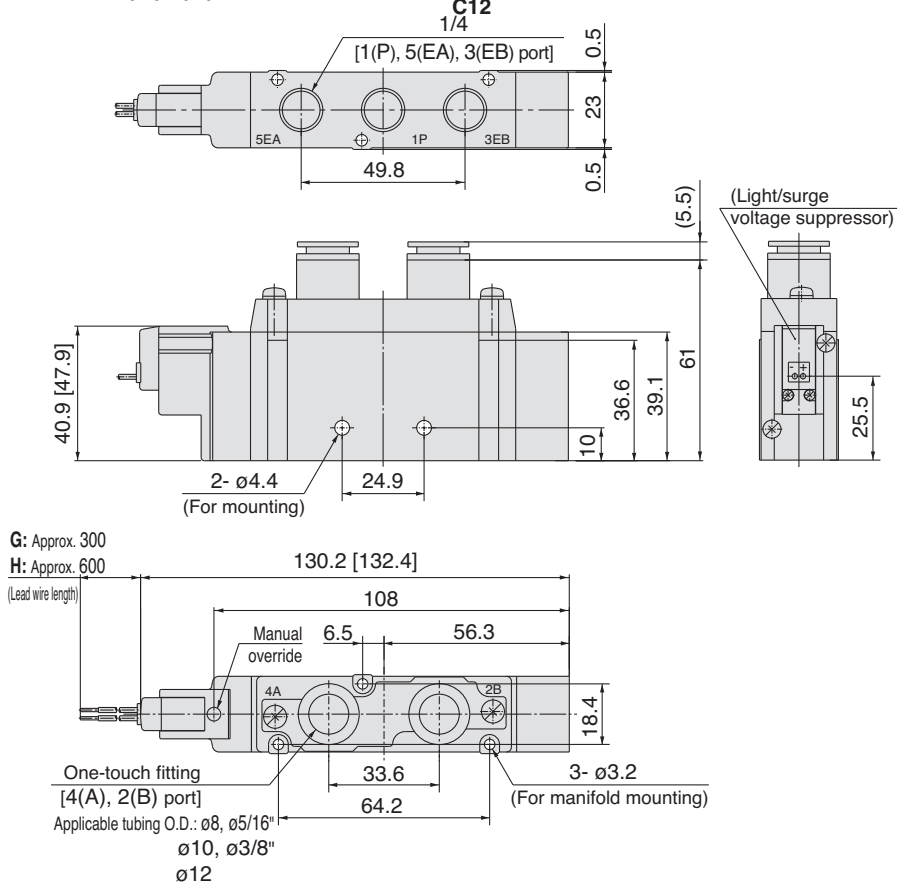

SY9120-□$^{G}_{H}$□□-$^{02}_{03}$□-Q

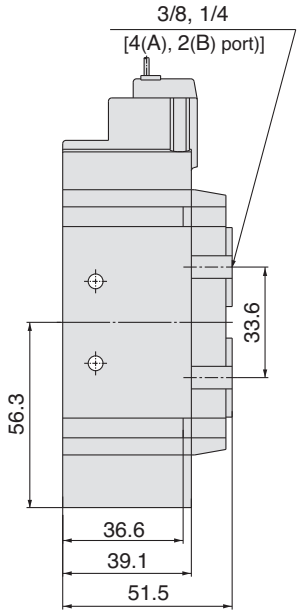

L plug connector (L):
SY9120-□L□□-$^{C8, N9}_{C10, N11}$□-Q
C12

M plug connector (M):
SY9120-□M□□-$^{C8, N9}_{C10, N11}$□-Q
C12

DIN terminal (D):
SY9120-□D□□-$^{C8, N9}_{C10, N11}$□-Q
C12

M8 connector (WO):
SY9120-□WO□□-$^{C8, N9}_{C10, N11}$□-Q
C12

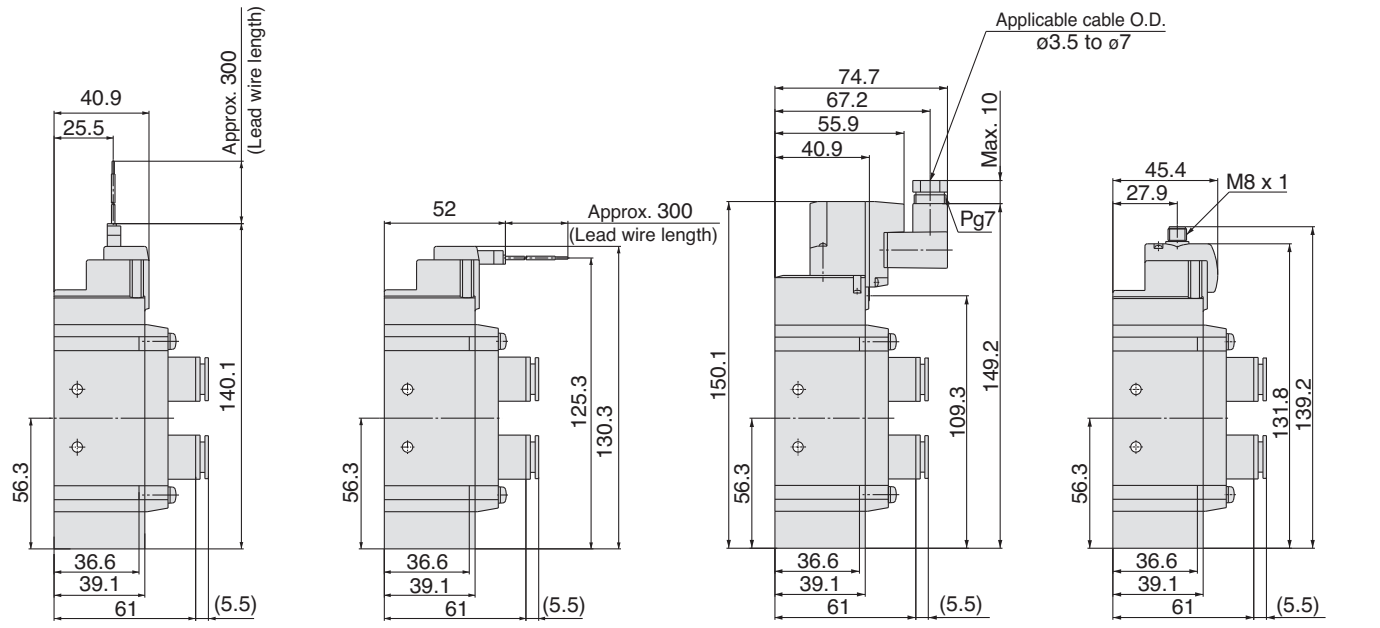

Note) Refer to back page 12 for
dimensions of connector types.

Dimensions: Series SY9000

2 position double
Grommet (G), (H): SY9220-□$^{G}_{H}$□□-$^{C8, N9}_{C10, N11}$□-Q

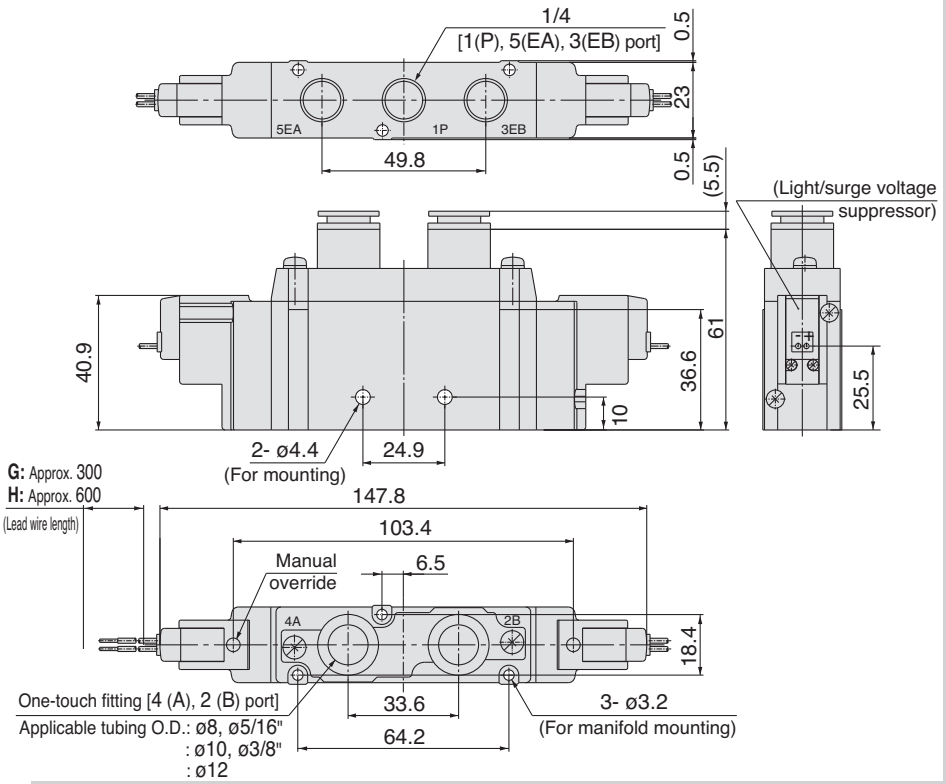

SY9220-□$^{G}_{H}$□□-$^{02}_{03}$□-Q

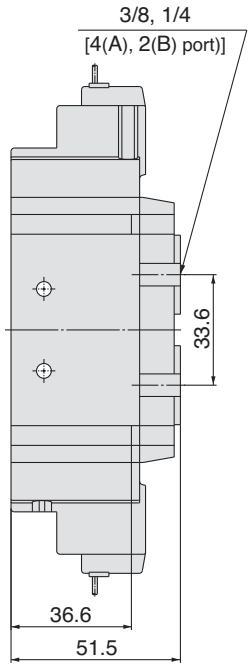

L plug connector (L): SY9220-□L□□-$^{C8, N9}_{C10, N11}$□-Q

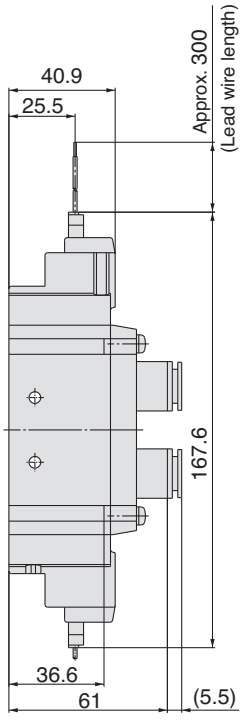

M plug connector (M): SY9220-□M□□-$^{C8, N9}_{C10, N11}$□-Q

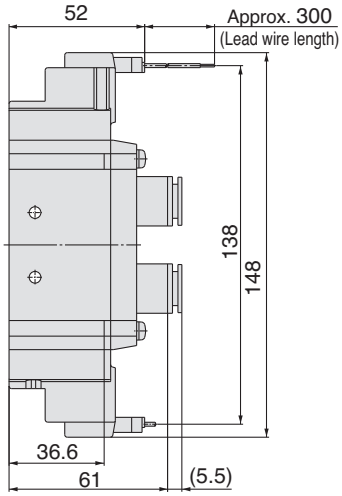

DIN terminal (D): SY9220-□D□□-$^{C8, N9}_{C10, N11}$□-Q

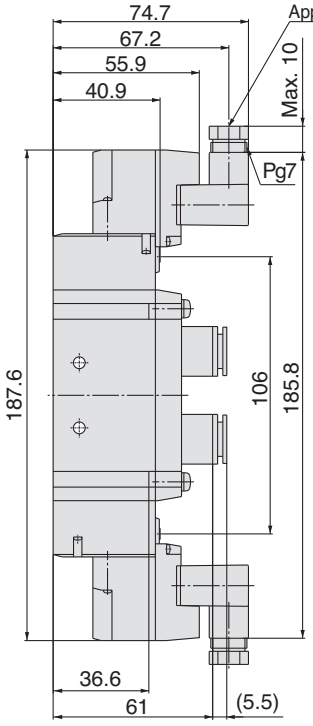

M8 connector (WO): SY9220-□WO□□-$^{C8, N9}_{C10, N11}$□-Q

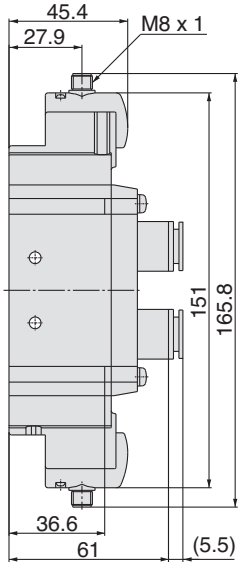

Note) Refer to back page 12 for dimensions of connector types.

Dimensions: Series SY9000

3 position closed center / exhaust center / pressure

Grommet (G), (H): SY9$^{3}_{5}$20-□$^{G}_{H}$□□-$^{C8, N9}_{C10, N11}$□-Q

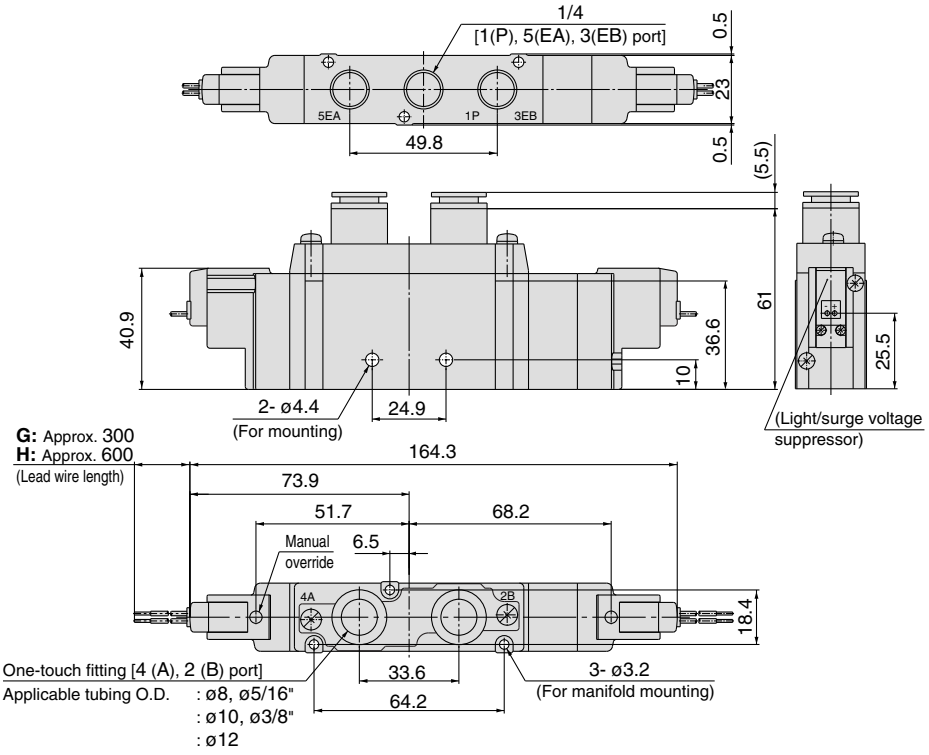

SY9$^{3}_{5}$20-□$^{G}_{H}$□□-$^{02}_{03}$□-Q

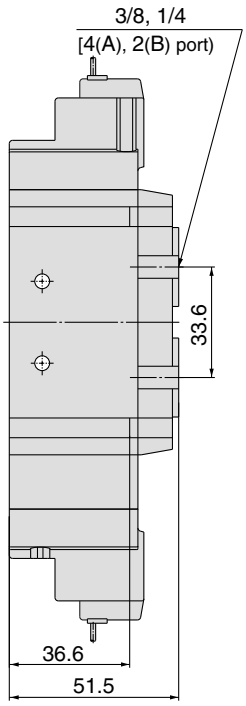

L plug connector (L):
SY9$^{3}_{5}$20-□L□□-$^{C8, N9}_{C10, N11}$□-Q

M plug connector (M):
SY9$^{3}_{5}$20-□M□□-$^{C8, N9}_{C10, N11}$□-Q

DIN terminal (D):
SY9$^{3}_{5}$20-□D□□-$^{C8, N9}_{C10, N11}$□-Q

M8 connector (WO):
SY9$^{3}_{5}$20-□WO□□-$^{C8, N9}_{C10, N11}$□-Q

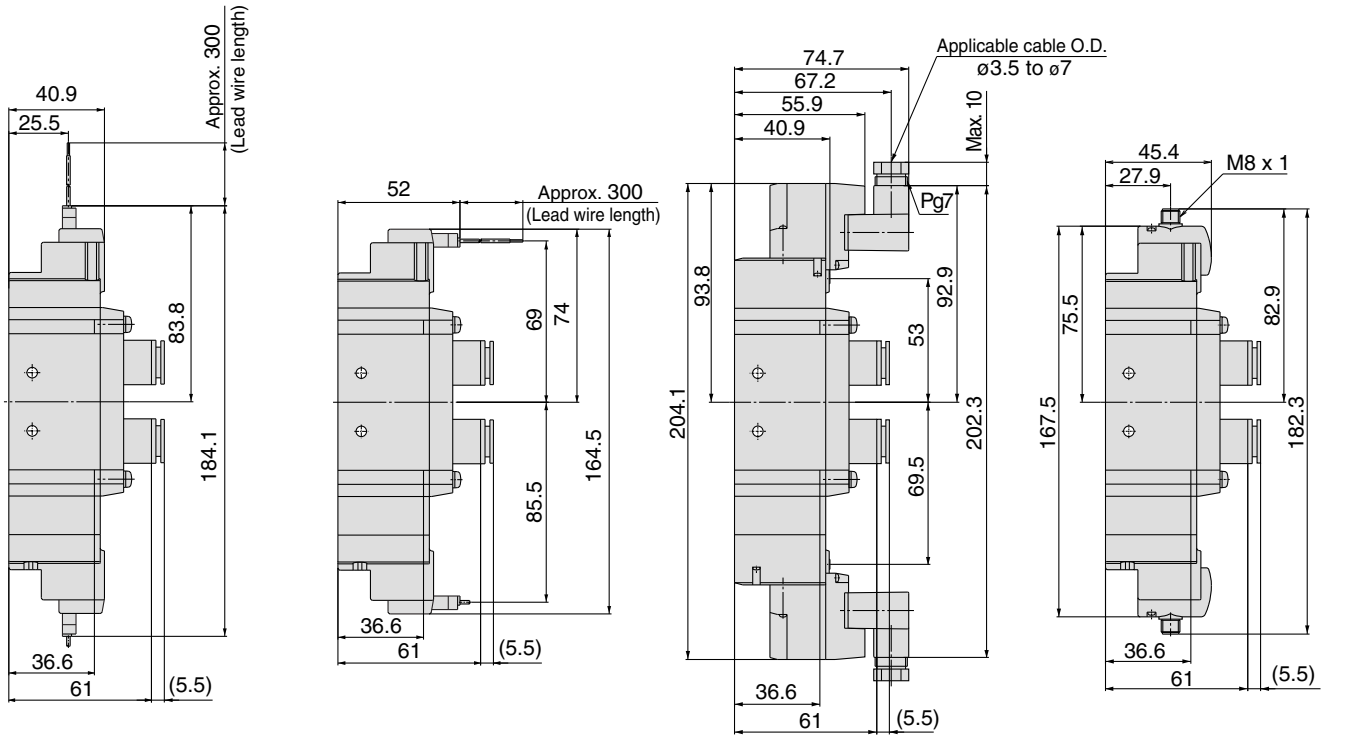

Note) Refer to back page 12 for dimensions of connector types.

5 Port Solenoid Valve
Series SY3000/5000/7000/9000
Base Mounted
Single Unit

How to Order

SY 5 2 40 □ □ – 5 L □ □ – □ □ □ -Q

Series

3	SY3000
5	SY5000
7	SY7000
9	SY9000

Type of actuation

1	2 position single
2	2 position double
3	3 position closed center
4	3 position exhaust center
5	3 position pressure center

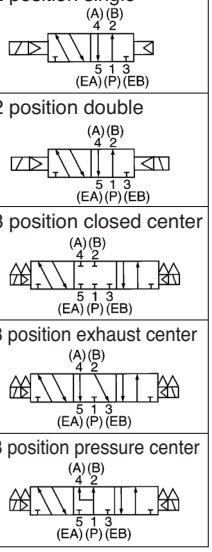

Pilot type

-	Internal pilot
R	External pilot

Coil specifications

-	Standard
T	With power saving circuit (24, 12 VDC only)

∗ Power saving circuit is not available in the case of D, DO or W□ type.

Rated voltage

For DC

5	24 VDC
6	12 VDC
V	6 VDC
S	5 VDC
R	3 VDC

For AC (50/60 Hz)

1	100 VAC
2	200 VAC
3	110 VAC [115 VAC]
4	220 VAC [230 VAC]

∗ DC specifications of type D, Y, DO and YO is only available with 12 and 24 VDC.
∗ For type W□, DC voltage is only available.
Note) AC-type models that are CE/UKCA-compliant have DIN terminals only..

Port size

Symbol	Port size	Applicable series
-	Without sub-plate	
01	1/8 With sub-plate	SY3000
02	1/4 With sub-plate	SY5000 SY7000
03	3/8 With sub-plate	SY7000 SY9000
04	1/2 With sub-plate	SY9000

Thread type

-	Rc
F	G
N	NPT
T	NPTF

Made to Order

—	—
X90	Main valve fluororubber

Manual override

-: Non-locking push type

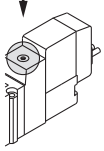

D: Push-turn locking slotted type

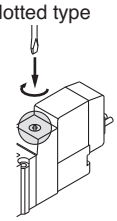

E: Push-turn locking lever type

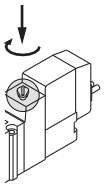

(Light/surge voltage suppressor)

Electrical entry for G, H, L, M, W

-	Without light/surge voltage suppressor
S	With surge voltage suppressor
Z	With light/surge voltage suppressor
R	With surge voltage suppressor (Non-polar type)
U	With light/surge voltage suppressor (Non-polar type)

∗ Power saving circuit is only available in the "Z" type.

Electrical entry for D , Y

-	Without light/surge voltage suppressor
S	With surge voltage suppressor (Non-polar type)
Z	With light/surge voltage suppressor (Non-polar type)

∗ DOZ is not available.
∗ For AC voltage valves there is no "S" option. It is already built-in to the rectifier circuit.

Electrical entry

24, 12, 6, 5, 3 VDC			24, 12 VDC/ 100, 110, 200, 220 VAC	24, 12, 6, 5, 3 VDC
Grommet	L plug connector	M plug connector	DIN terminal	M8 connector ∗
G: Lead wire length 300 mm	**L:** With lead wire (Length 300 mm)	**M:** With lead wire (Length 300 mm) **MN:** Without lead wire	**D, Y:** With connector	**WO:** Without connector cable
H: Lead wire length 600 mm	**LN:** Without lead wire	**LO:** Without connector **MO:** Without connector	**DO, YO:** Without connector	**W□:** With connector cable Note 1)

∗ LN, MN type: with 2 sockets.
∗ For DIN terminal of SY3000 series, refer to back page 228.
∗ DIN terminal type "Y" which conforms to EN-175301-803C (former DIN43650C) is also available. For details, refer to page 227.
∗ For connector cable of M8 connector, refer to back page 230.
∗ Connector M8 type "WA" conforming to IEC 60947-5-2 standard, is also available. For details, see page 211.
Note 1) Enter the cable length symbols in □. Please be sure to fill in the blank referring to back page 231.

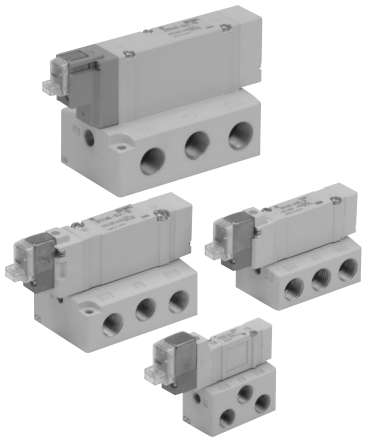

Made to Order **Made to Order**
(For details, refer to pages 203 through to 217.)

Specifications

Series			SY3000	SY5000	SY7000	SY9000
Fluid			Air			
Internal pilot Operating pressure range(MPa)	2 position single		0.15 to 0.7			
	2 position double		0.1 to 0.7			
	3 position		0.2 to 0.7			
External pilot Operating pressure range(MPa)	Operating pressure range		–100 kPa to 0.7			
	Pilot pressure range	2 position single	0.25 to 0.7			
		2 position double	0.25 to 0.7			
		3 position	0.25 to 0.7			
Ambient and fluid temperature (°C)			–10 to 50 (No freezing)			
Max. operating frequency (Hz)	2 Position single, Double		10	5	5	5
	3 position		3	3	3	3
Manual override (Manual operation)			Non-locking push type, Push-turn locking slotted type, Push-turn locking lever type			
Pilot exhaust method	Internal pilot		Common exhaust type for main and pilot valve			
	External pilot		Pilot valve individual exhaust			
Lubrication			Not required			
Mounting orientation			Unrestricted			
Impact/Vibration resistance (m/s²) Note)			150/30			
Enclosure			Dust proof (∗ DIN terminal and M8 connector: IP65)			

∗ Based on IEC60529)

Note) Impact resistance: No malfunction occurred when it is tested in the axial direction and at the right angles to the main valve and armature in both energised and de-energised states every once for each condition. (Values at the initial period)

Vibration resistance: No malfunction occurred in a one-sweep test between 45 and 2000 Hz. Test was performed at both energised and de-energised states in the axial direction and at the right angles to the main valve and armature. (Values at the initial period)

Response Time

Note) Based on dynamic performance test, JIS B 8375-1981. (Coil temperature: 20C, at rated voltage)

SY3000

Type of actuation	Response time (ms) (at the pressure of 0.5 MPa)		
	Without light/surge voltage suppressor	With light/surge voltage suppressor	
		Type S, Z	Type R, U
2 position single	12 or less	15 or less	12 or less
2 position double	10 or less	13 or less	10 or less
3 position	15 or less	20 or less	16 or less

SY5000

Type of actuation	Response time (ms) (at the pressure of 0.5 MPa)		
	Without light/surge voltage suppressor	With light/surge voltage suppressor	
		Type S, Z	Type R, U
2 position single	19 or less	26 or less	19 or less
2 position double	18 or less	22 or less	18 or less
3 position	32 or less	38 or less	32 or less

SY7000

Type of actuation	Response time (ms) (at the pressure of 0.5 MPa)		
	Without light/surge voltage suppressor	With light/surge voltage suppressor	
		Type S, Z	Type R, U
2 position single	31 or less	38 or less	33 or less
2 position double	27 or less	30 or less	28 or less
3 position	50 or less	56 or less	50 or less

SY9000

Type of actuation	Response time (ms) (at the pressure of 0.5 MPa)		
	Without light/surge voltage suppressor	With light/surge voltage suppressor	
		Type S, Z	Type R, U
2 position single	35 or less	41 or less	35 or less
2 position double	35 or less	41 or less	35 or less
3 position	62 or less	64 or less	62 or less

Solenoid Specifications

Electrical entry			Grommet (G), (H) L plug connector (L) M plug connector (M)	DIN terminal (D) M8 connector (W)
			G, H, L, M, W	D
Coil rated voltage (V)	DC		24, 12, 6, 5, 3	24, 12
	AC 50/60 Hz		100, 110	200, 220
Allowable voltage fluctuation (%)			10% of rated voltage *	
Power consumption (W)	DC	Standard	0.35 (With indicator light: 0.4 DIN terminal with indicator light: 0.45)	
		With power saving circuit	0.1 (With indicator light only)	
Apparent power (VA) *	AC	100 V	-	0.78 (With indicator light: 0.87)
		110 V [115 V]	- -	0.86 (With indicator light: 0.97) [0.94 (With indicator light: 1.07)]
		200 V	-	1.15 (With indicator light: 1.30)
		220 V [230 V]	- -	1.27 (With indicator light: 1.46) [1.39 (With indicator light: 1.60)]
Surge voltage suppressor			Diode (Varistor is for DIN terminal and Non-polar type.)	
Indicator light			LED (AC of DIN connector is neon light.)	

∗ In common between 110 VAC and 115 VAC, and between 220 VAC and 230 VAC.

∗ For 115 VAC and 230 VAC, the allowable voltage is –15% to +5% of rated voltage.

∗ S, Z and T type (with power saving circuit) should be used within the following allowable voltage fluctuation range due to a voltage drop caused by the internal circuit.

S and Z type: 24 VDC: –7% to +10%
12 VDC: –4% to +10%
T type: 24 VDC: –8% to +10%

Flow Characteristics/Weight

Series SY3000

Valve model	Type of actuation		Port size	Flow characteristics Note 1)								Weight (g) Note 2)		
				1 → 4/2 (P → A/B)				4/2 → 5/3 (A/B → EA/EB)				Grommet	L plug connector, M plug connector	W M8 connector
				C (dm³/(s·bar))	b	Cv	Q[ℓ/min(ANR)]	C (dm³/(s·bar))	b	Cv	Q[ℓ/min(ANR)]			
SY3□40-□-01	2 position	Single	1/8	1.0	0.30	0.24	254	1.1	0.30	0.26	280	84 [50]	85 [53]	89 [57]
		Double										102 [68]	107 [73]	115 [81]
	3 position	Closed center		0.77	0.28	0.18	193	0.85	0.30	0.19	216	104 [69]	109 [74]	117 [82]
		Exhaust center		0.73	0.31	0.18	187	1.1 (0.55)	0.26 (0.52)	0.24 (0.16)	273 (164)			
		Pressure center		1.2 (0.51)	0.24 (0.45)	0.29 (0.14)	294 (144)	0.89	0.47	0.24	255			

Note 1) [ ]: denotes the normal position. Note 2) [ ]: denotes without sub-plate.
* These values have been calculated according to ISO6358 and represent the flow rate measured in standard conditions at an upstream pressure of 0.6 MPa (relative pressure) and a differential pressure of 0.1MPa.

Series SY5000

Valve model	Type of actuation		Port size	Flow characteristics Note 1)								Weight (g) Note 2)			
				1 → 4/2 (P → A/B)				4/2 → 5/3 (A/B → EA/EB)				Grommet	L plug connector, M plug connector	DIN terminal	W M8 connector
				C (dm³/(s·bar))	b	Cv	Q[ℓ/min(ANR)]	C (dm³/(s·bar))	b	Cv	Q[ℓ/min(ANR)]				
SY5□40-□-02	2 position	Single	1/4	2.4	0.41	0.64	658	2.8	0.29	0.66	707	121 [58]	123 [61]	154 [92]	127 [65]
		Double										139 [76]	144 [81]	186 [123]	152 [89]
	3 position	Closed center		1.8	0.47	0.50	516	1.8	0.40	0.47	490	144 [82]	150 [87]	192 [129]	158 [95]
		Exhaust center		1.4	0.55	0.44	430	3.0 (1.2)	0.33 (0.48)	0.72 (0.37)	778 (347)				
		Pressure center		3.3 (0.84)	0.36 (0.60)	0.85 (0.28)	873 (270)	1.8	0.40	0.48	490				

Note 1) [ ]: denotes the normal position. Note 2) [ ]: denotes without sub-plate.
* These values have been calculated according to ISO6358 and represent the flow rate measured in standard conditions at an upstream pressure of 0.6 MPa (relative pressure) and a differential pressure of 0.1MPa.

Series SY7000

Valve model	Type of actuation		Port size	Flow characteristics Note 1)								Weight (g) Note 2)			
				1 → 4/2 (P → A/B)				4/2 → 5/3 (A/B → EA/EB)				Grommet	L plug connector, M plug connector	DIN terminal	W M8 connector
				C (dm³/(s·bar))	b	Cv	Q[ℓ/min(ANR)]	C (dm³/(s·bar))	b	Cv	Q[ℓ/min(ANR)]				
SY7□40-□-02	2 position	Single	1/4	4.1	0.41	1.1	1123	4.1	0.29	1.0	1036	218 [89]	221 [92]	242 [113]	225 [96]
		Double										237 [108]	242 [113]	284 [155]	250 [121]
	3 position	Closed center		3.0	0.43	0.80	834	2.6	0.41	0.72	712	239 [110]	245 [116]	287 [158]	253 [124]
		Exhaust center		2.6	0.42	0.71	718	4.7 (1.7)	0.35 (0.48)	1.1 (0.49)	1235 (492)				
		Pressure center		5.3 (2.3)	0.39 (0.49)	1.3 (0.65)	1431 (670)	2.2	0.49	0.63	641				
SY7□40-□-03	2 position	Single	3/8	4.9	0.29	1.2	1238	4.5	0.27	1.1	1123	218 [89]	221 [92]	242 [113]	225 [96]
		Double										237 [108]	242 [113]	284 [155]	250 [121]
	3 position	Closed center		3.0	0.40	0.80	816	2.6	0.45	0.73	734	239 [110]	245 [116]	287 [158]	253 [124]
		Exhaust center		2.6	0.42	0.71	718	4.8 (1.7)	0.35 (0.48)	1.1 (0.49)	1261 (492)				
		Pressure center		5.3 (2.3)	0.31 (0.51)	1.3 (0.64)	1356 (682)	2.3	0.45	0.66	649				

Note 1) [ ]: denotes the normal position. Note 2) [ ]: denotes without sub-plate.
* These values have been calculated according to ISO6358 and represent the flow rate measured in standard conditions at an upstream pressure of 0.6 MPa (relative pressure) and a differential pressure of 0.1MPa.

Series SY9000

Valve model	Type of actuation		Port size	Flow characteristics Note1)								Weight (g) Note 2)			
				1 → 4/2 (P → A/B)				4/2 → 5/3 (A/B → EA/EB)				Grommet	L plug connector, M plug connector	DIN terminal	W M8 connector
				C (dm³/(s·bar))	b	Cv	Q[ℓ/min(ANR)]	C (dm³/(s·bar))	b	Cv	Q[ℓ/min(ANR)]				
SY9□40-□-03	2 position	Single	3/8	7.9	0.34	2.0	2062	9.6	0.43	2.6	2670	469[172]	472[175]	493[196]	476[179]
		Double										488[191]	494[197]	535[239]	502[205]
	3 position	Closed center		7.5	0.33	1.8	1944	7.3	0.30	1.7	1856	512[215]	518[221]	560[263]	526[229]
		Exhaust center		7.2	0.34	1.7	1879	13 (4.0)	0.23 (0.41)	2.8 (0.95)	3168 (1096)				
		Pressure center		12 (3.3)	0.26 (0.41)	2.8 (0.84)	2977 (904)	6.7	0.40	1.9	1823				
SY9□40-□-04	2 position	Single	1/2	8.0	0.48	2.2	2313	10	0.29	2.5	2527	448 [172]	453 [175]	472	457[179]
		Double										467 [191]	473 [197]	515	481[205]
	3 position	Closed center		7.6	0.32	1.8	1957	7.3	0.32	1.8	1880	491 [215]	497 [221]	539	505[229]
		Exhaust center		7.3	0.42	2.0	2015	13 (4.7)	0.32 (0.54)	3.6 (1.5)	3348 (1430)				
		Pressure center		12 (3.3)	0.33 (0.51)	3.3 (0.94)	3111 (978)	7.4	0.33	1.9	1918				

Note 1) [ ]: denotes the normal position. Note 2) [ ]: denotes without sub-plate.
* These values have been calculated according to ISO6358 and represent the flow rate measured in standard conditions at an upstream pressure of 0.6 MPa (relative pressure) and a differential pressure of 0.1MPa.

Construction

Series SY

JIS Symbol
2 position single

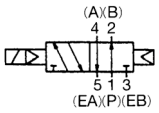

2 position single

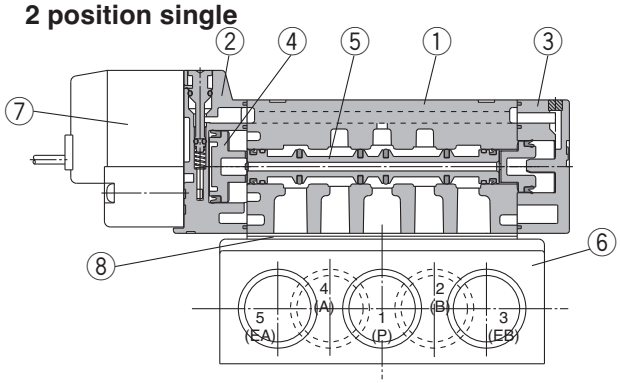

JIS Symbol
2 position double

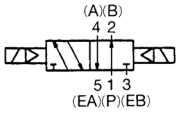

2 position double

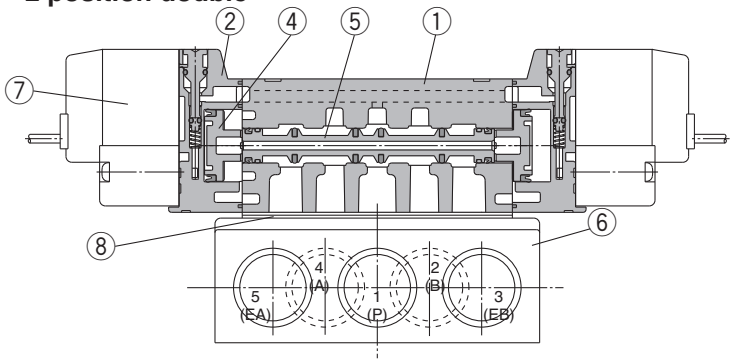

Symbol
3 position closed center

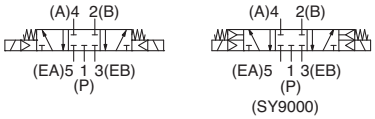

3 position exhaust center

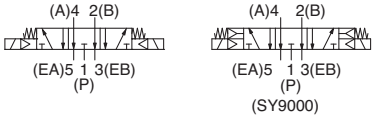

3 position pressure center

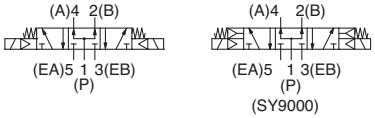

3 position closed center / exhaust center / pressure center

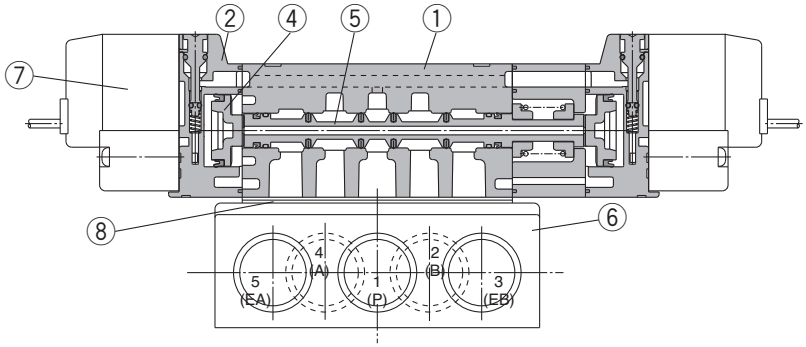

(This figure shows a closed center type.)

Component Parts

No.	Description	Material	Note
1	Body	Aluminum die-casted (SY3000: Zinc die-casted)	White
2	Adapter plate	Resin	White (SY9000: Gray)
3	End plate	Resin	White
4	Piston	Resin	–
5	Spool valve assembly	Aluminum, HNBR	–

Replacement Parts

No.	Description	Part No.				Note
		SY3□40	**SY5□40**	**SY7□40**	**SY9□40**	
6	Sub-plate	SY3000-27-1✻-Q	SY5000-27-1✻-Q	1/4: SY7000-27-1✻-Q 3/8: SY7000-27-2 -Q ✻	3/8: SY9000-27-1✻-Q 1/2: SY9000-27-2✻-Q	Aluminum die-casted
7	Pilot valve assembly	Refer to “How to Order Pilot Valve Assembly” on page 218.				
8	Gasket	SY3000-11-25	SY5000-11-15	SY7000-11-11	SY9000-11-2	H-NBR
–	Round head combination screw	SY3000-23-4 (M2 x 21)	M3 x 26	M4 x 31	SY9000-18-2 (M3 x 42)	For valve mounting (Matt nickel plated)

✻ Thread type

⚠ Caution

Mounting screw tightening torques

M2: 0.16 N·m
M3: 0.8 N·m
M4: 1.4 N·m

How to Order Interface Regulator

Series SY3000

ARBY3000 — 05 — P — 2

Pressure gauge connection port

05	Pressure gauge (G15-10-01)
M1	Plug (M-5P)

Regulating port

P	P port
A1	A port (P controlled type, A port regulation)
B1	B port (P controlled type, B port regulation)

ARBY3000-05-□-2

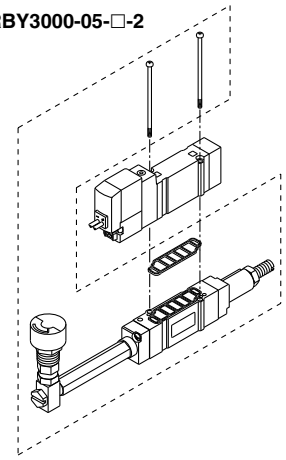

ARBY3000-M1-□-2

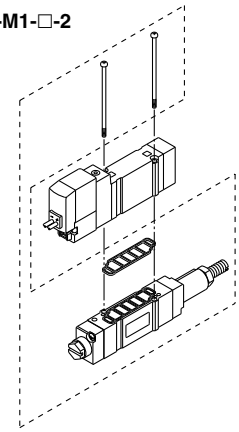

Series SY5000

ARBY5000 — 00 — P — 2

Pressure gauge connection port

00	Pressure gauge (G15-10-01)
M1	Plug (M-5P)

Regulating port

P	P port
A1	A port (P controlled type, A port regulation)
B1	B port (P controlled type, B port regulation)

ARBY5000-00-□-2

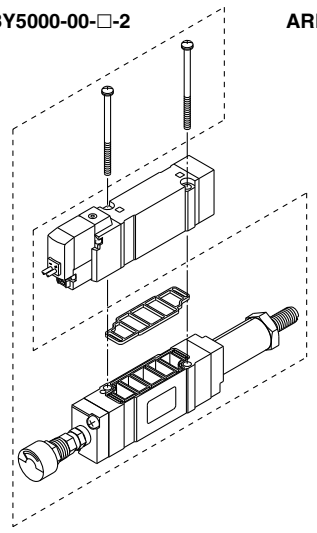

ARBY5000-M1-□-2

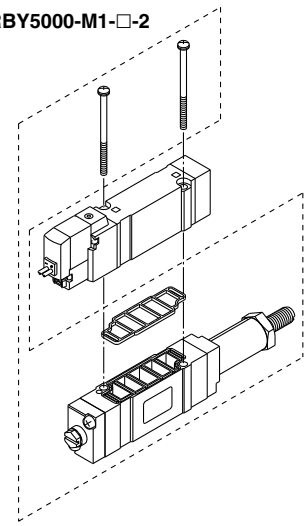

Series SY7000

ARBY7000 — 00 — P — 2

Pressure gauge connection port

00	Pressure gauge (G15-10-01)
M1	Plug (M-5P)

Regulating port

P	P port
A1	A port (P controlled type, A port regulation)
B1	B port (P controlled type, B port regulation)

ARBY7000-00-□-2

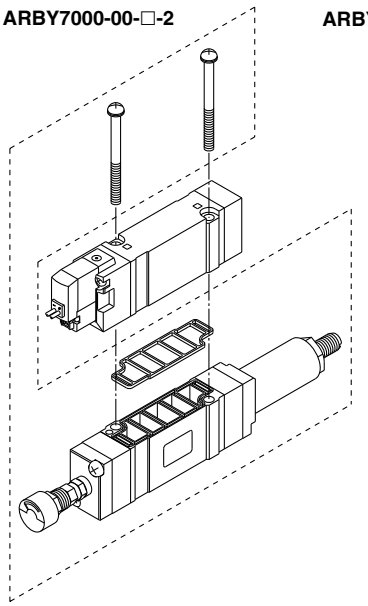

ARBY7000-M1-□-2

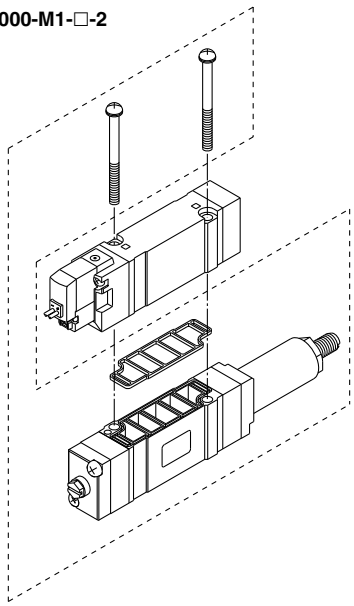

Accessory

Series	Round head combination screw	Gasket
ARBY3000	SY3000-23-10 (M2 x 36)	SX3000-57-4
ARBY5000	M3 x 48.5, Matt nickel plated	SX5000-57-6
ARBY7000	M4 x 57, Matt nickel plated	SX7000-57-4

⚠ Caution

Mounting screw tightening torques

M2: 0.16 N·m
M3: 0.8 N·m
M4: 1.4 N·m

Dimensions: Series SY3000

2 position single

Grommet (G), (H): SY3140(R)-□$^{G}_{H}$□□-01□-Q

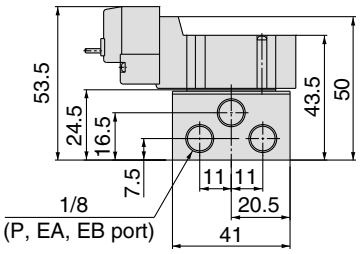

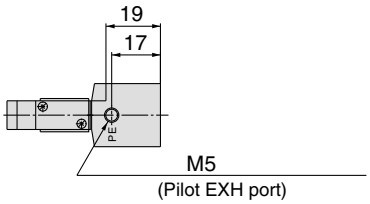

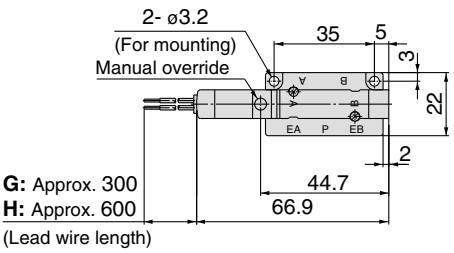

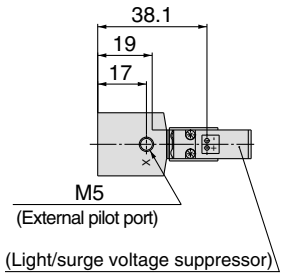

With interface regulator

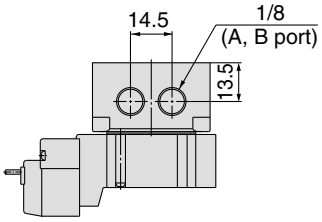

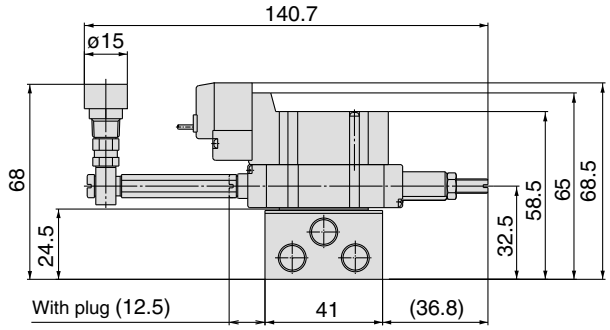

L plug connector (L):
SY3140(R)-□L□□-01□-Q

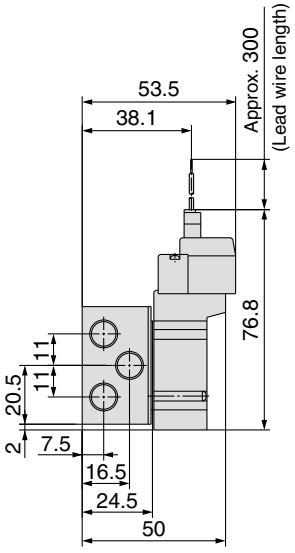

M plug connector (M):
SY3140(R)-□M□□-01□-Q

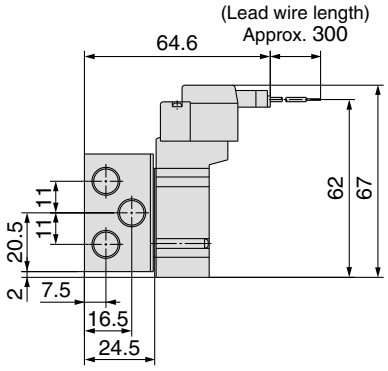

M8 connector (WO):
SY3140(R)-□WO□□-01□-Q

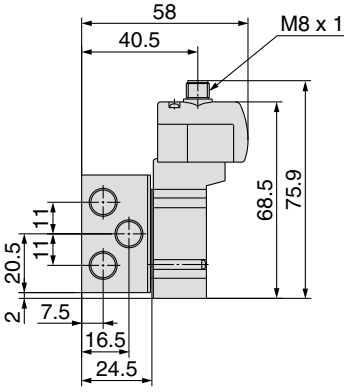

Note) Refer to back page 12 for dimensions of connector types.

Dimensions: Series SY3000

2 position double

Grommet (G), (H): SY3240(R)-□$^{G}_{H}$□□-01□-Q

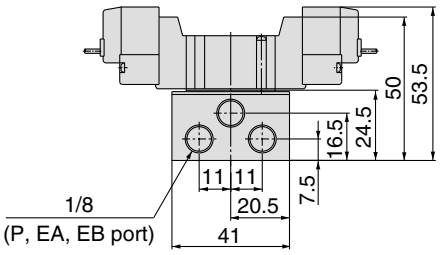

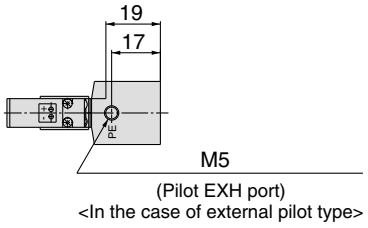

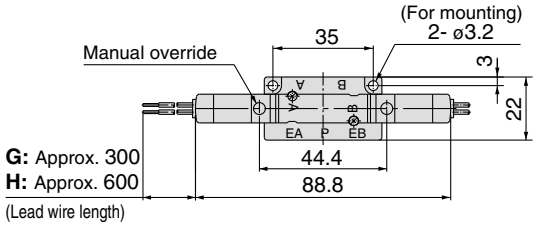

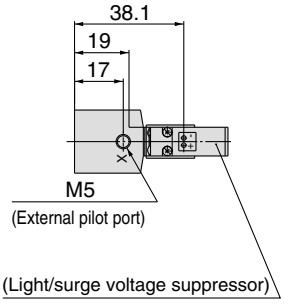

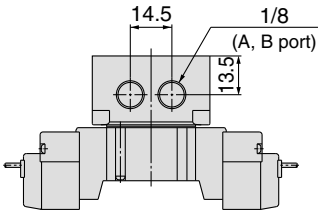

With interface regulator

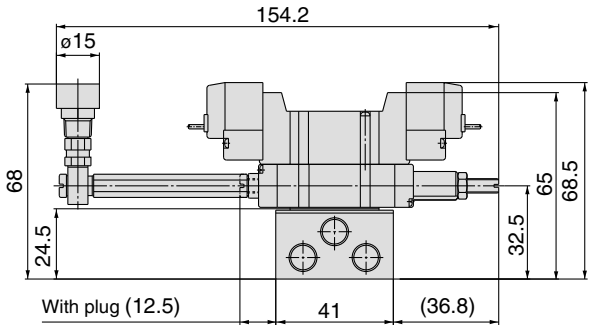

L plug connector (L):
SY3240(R)-□L□□-01□-Q

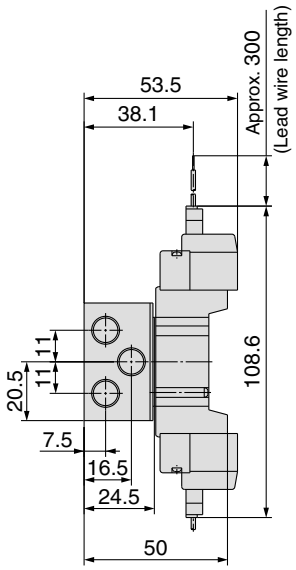

M plug connector (M):
SY3240(R)-□M□□-01□-Q

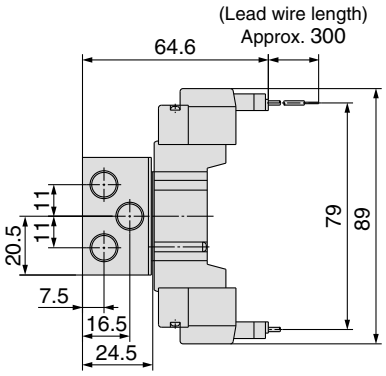

M8 connector (WO):
SY3240(R)-□WO□□-01□-Q

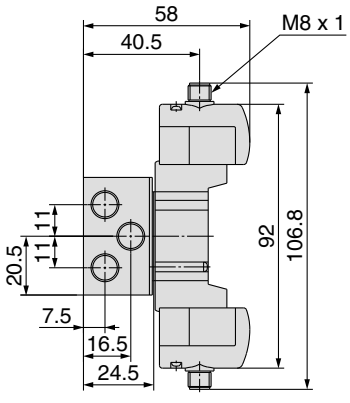

Note) Refer to back page 12 for dimensions of connector types.

Dimensions: Series SY3000

3 position closed center / exhaust center / pressure center

Grommet (G), (H): SY3$^{3}_{5}$40(R)-□$^{G}_{H}$□□-01□-Q

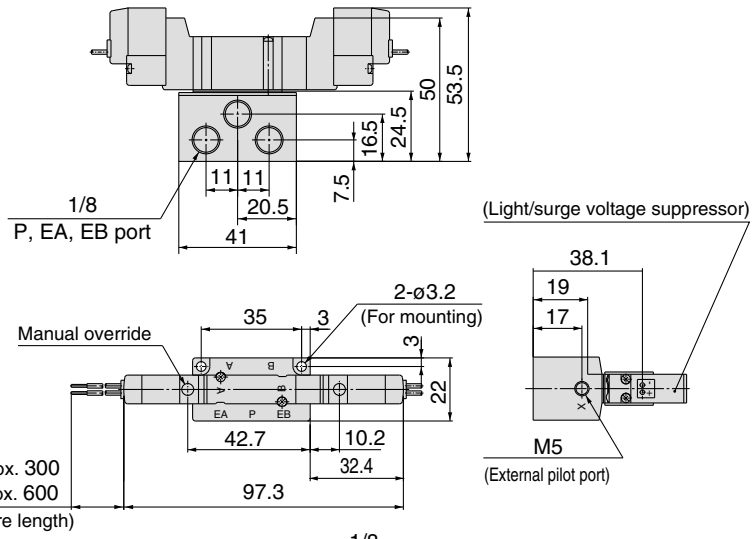

With interface regulator

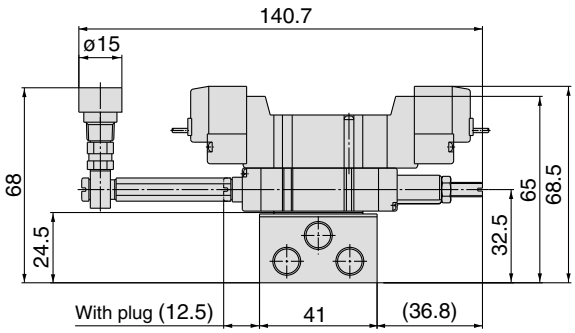

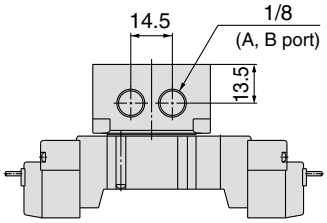

L plug connector (L):

SY3$^{3}_{5}$40(R)-□L□□-01□-Q

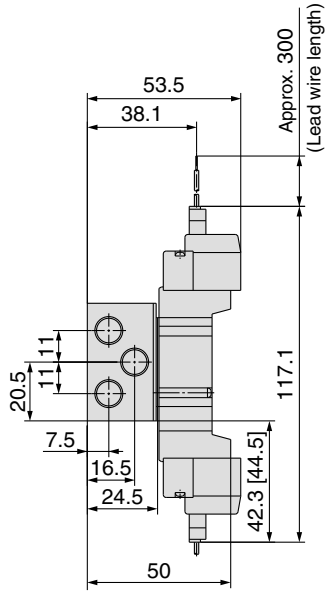

M plug connector (M):

SY3$^{3}_{5}$40(R)-□M□□-01□-Q

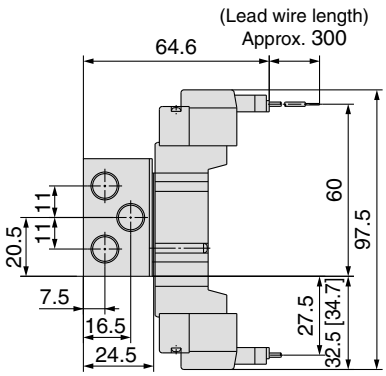

M8 connector (WO):

SY3$^{3}_{5}$40(R)-□WO□□-01□-Q

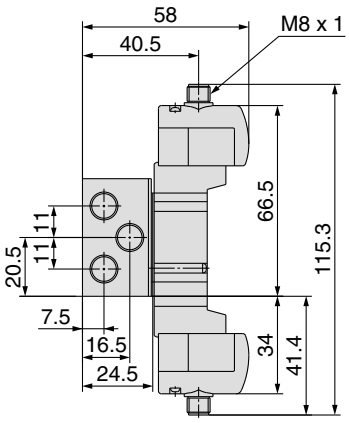

Note) Refer to back page 12 for dimensions of connector types.

Dimensions: Series SY5000

2 position single

Grommet (G), (H): SY5140(R)-□$^{G}_{H}$□□-02□-Q

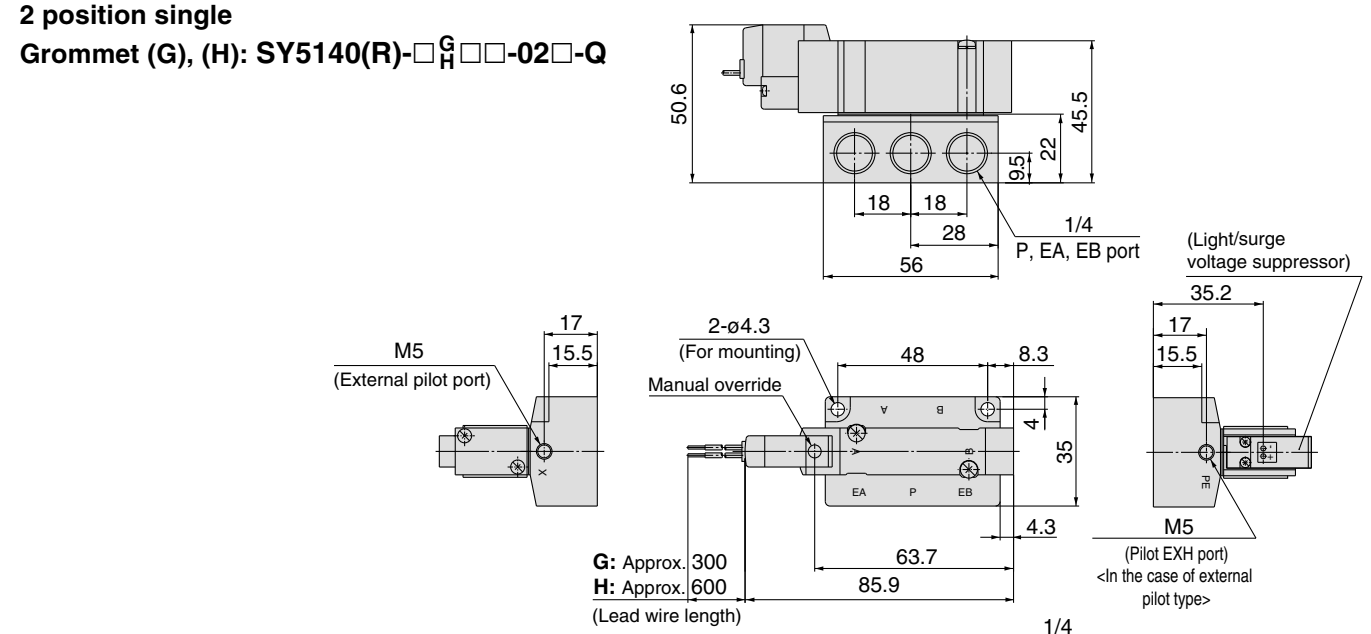

With interface regulator

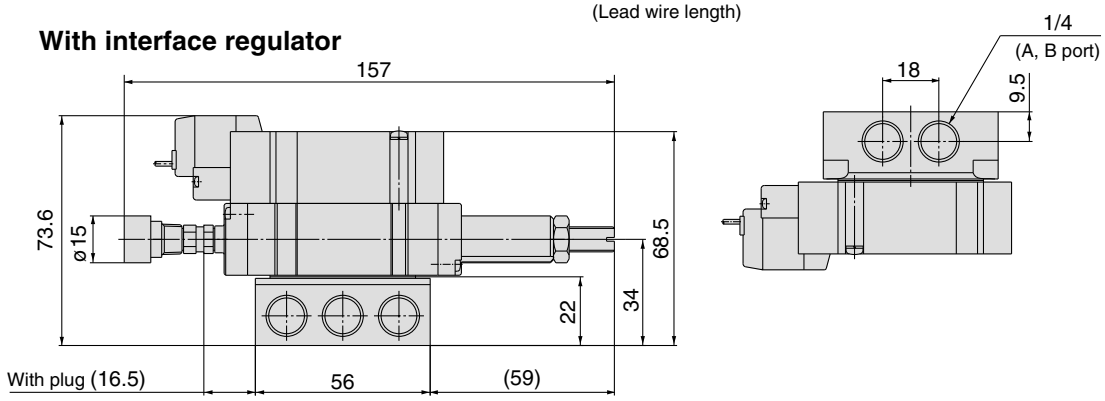

L plug connector (L): SY5140(R)-□L□□-02□-Q

M plug connector (M): SY5140(R)-□M□□-02□-Q

DIN terminal (D): SY5140(R)-□D□□-02□-Q

M8 connector (WO): SY5140(R)-□WO□□-02□-Q

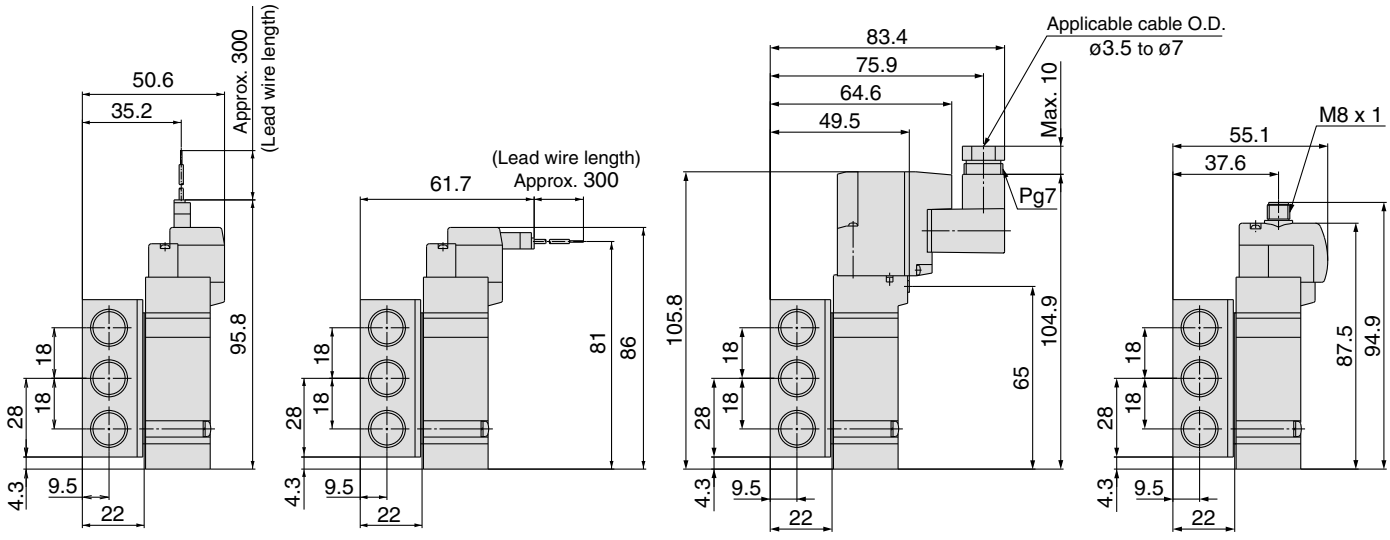

Note) Refer to back page 12 for dimensions of connector types.

Dimensions: Series SY5000

2 position double

Grommet (G), (H): SY5240(R)-□$^{G}_{H}$□□-02□-Q

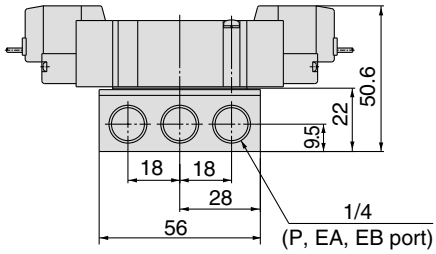

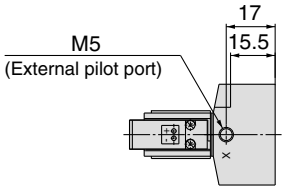

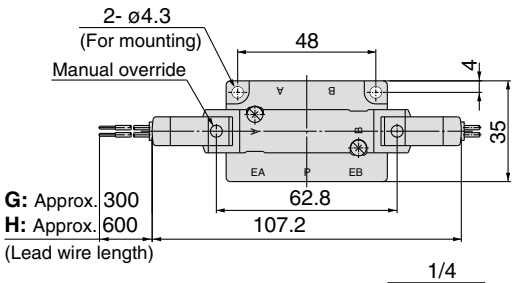

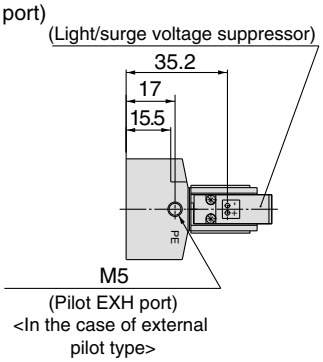

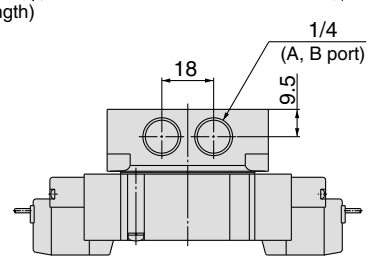

With interface regulator

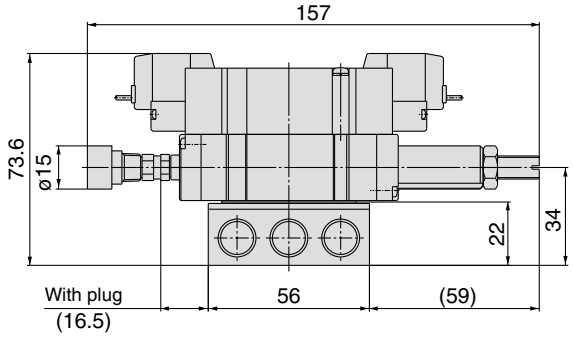

L plug connector (L): SY5240(R)-□L□□-02□-Q

M plug connector (M): SY5240(R)-□M□□-02□-Q

DIN terminal (D): SY5240(R)-□D□□-02□-Q

M8 connector (WO): SY5240(R)-□WO□□-02□-Q

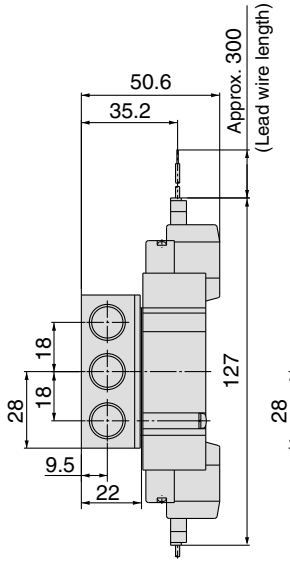

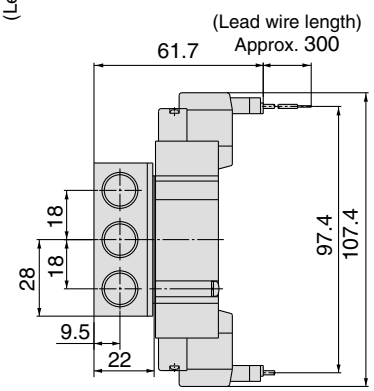

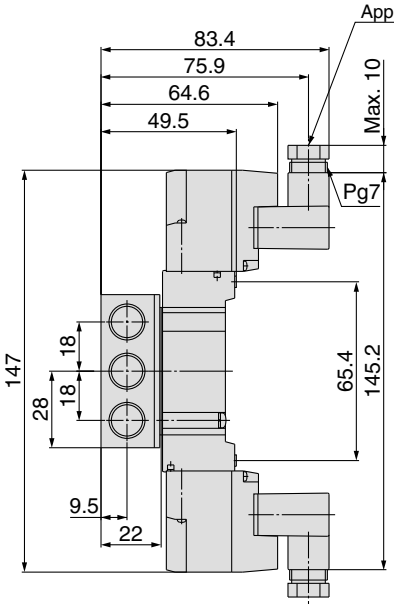

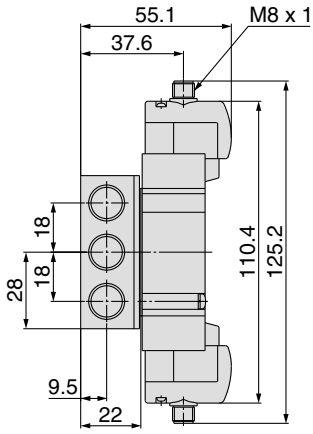

Note) Refer to back page 12 for dimensions of connector types.

Dimensions: Series SY5000

3 position closed center / exhaust center / pressure center

Grommet (G), (H): SY5$^{3}_{5}$40(R)-□$^{G}_{H}$□□-02□-Q

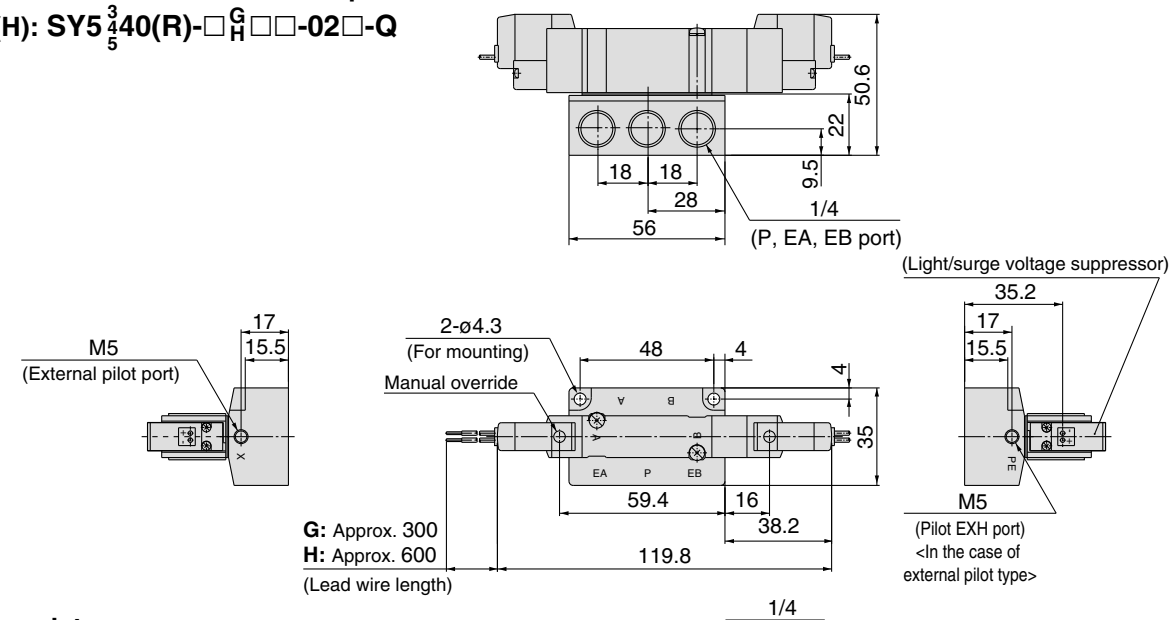

With interface regulator

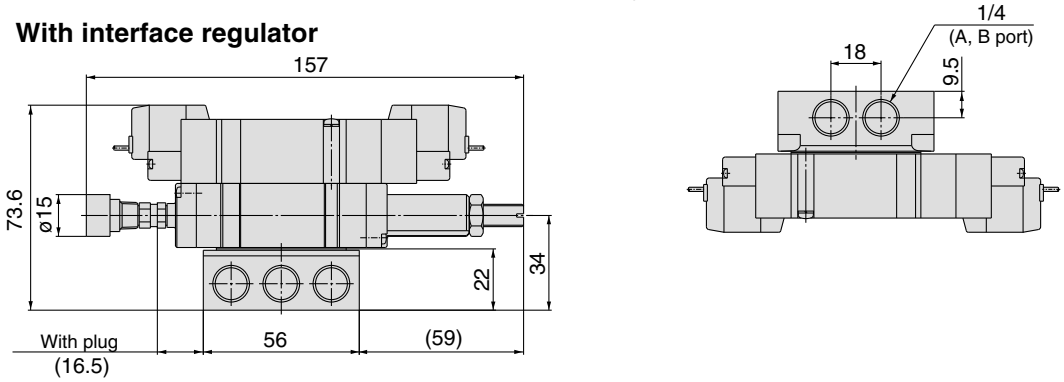

L plug connector (L):
SY5$^{3}_{5}$40(R)-□L□□-02□-Q

M plug connector (M):
SY5$^{3}_{5}$40(R)-□M□□-02□-Q

DIN terminal (D):
SY5$^{3}_{5}$40(R)-□D□□-02□-Q

M8 connector (WO):
SY5$^{3}_{5}$40(R)-□WO□□-02□-Q

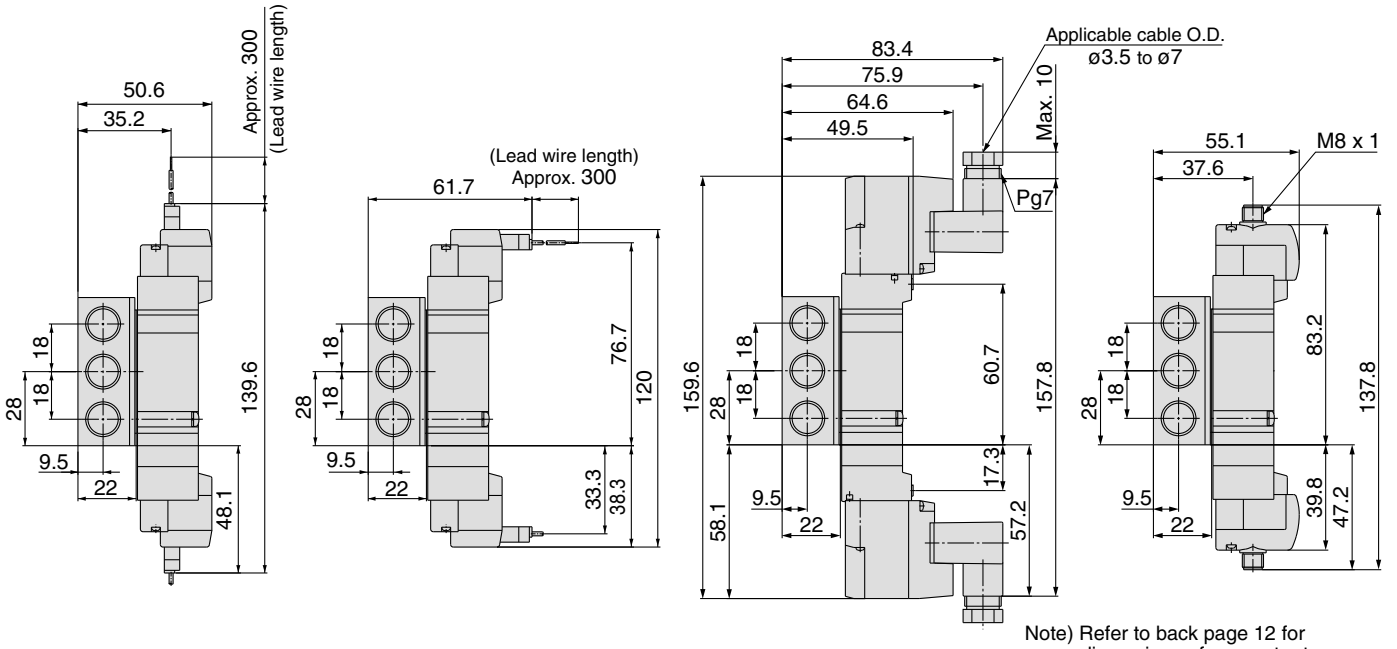

Note) Refer to back page 12 for dimensions of connector types.

Dimensions: Series SY7000

2 position single

Grommet (G), (H): SY7140(R)-□$^{G}_{H}$□□-$^{02}_{03}$□-Q

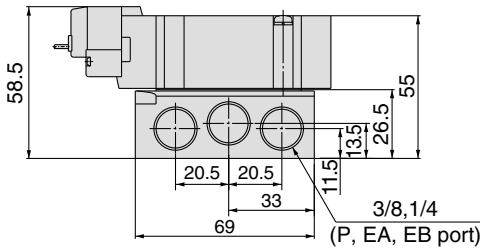

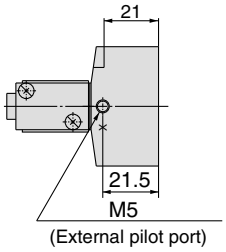

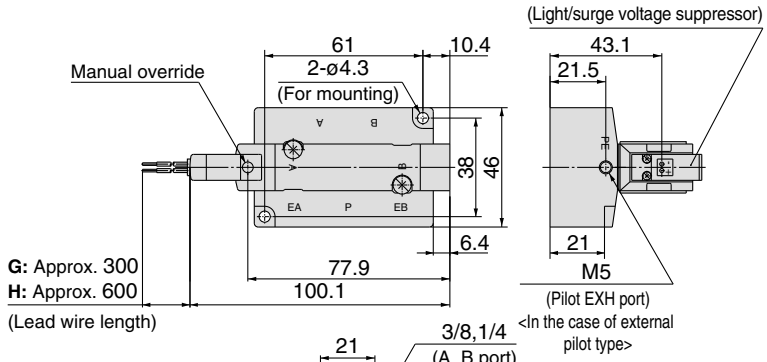

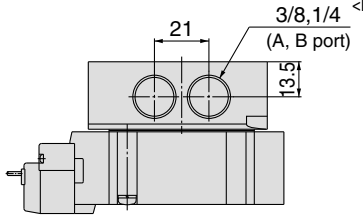

With interface regulator

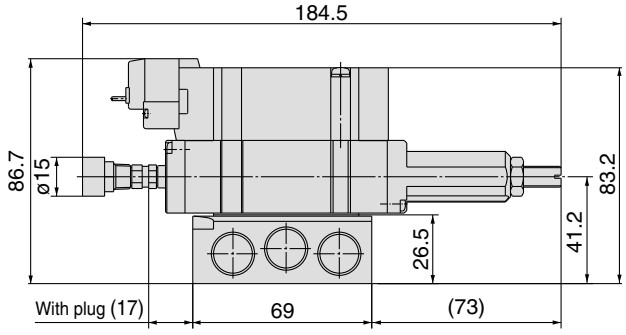

L plug connector (L): SY7140(R)-□L□□-$^{02}_{03}$□-Q

M plug connector (M): SY7140(R)-□M□□-$^{02}_{03}$□-Q

DIN terminal (D): SY7140(R)-□D□□-$^{02}_{03}$□-Q

M8 connector (WO): SY7140(R)-□WO□□-$^{02}_{03}$□-Q

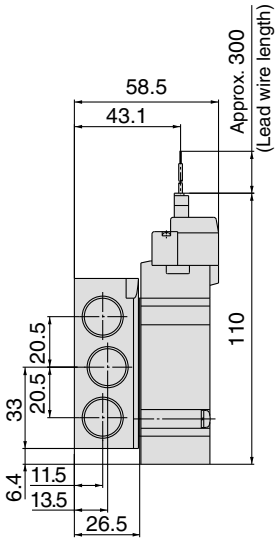

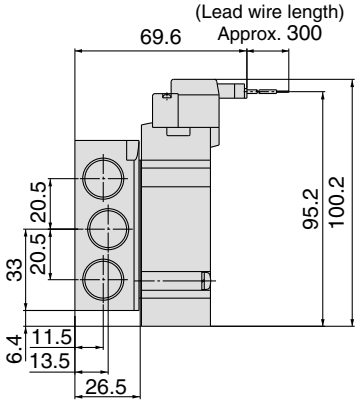

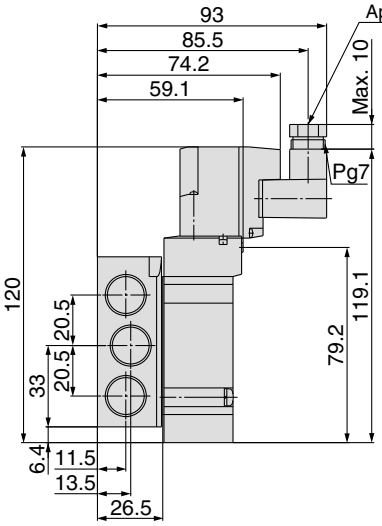

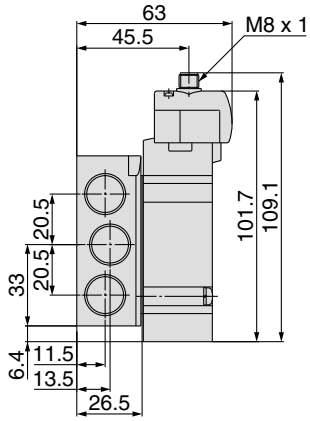

Note) Refer to back page 12 for dimensions of connector types.

Dimensions: Series SY7000

2 position double

Grommet (G), (H): SY7240(R)-□$^{G}_{H}$□□-$^{02}_{03}$□-Q

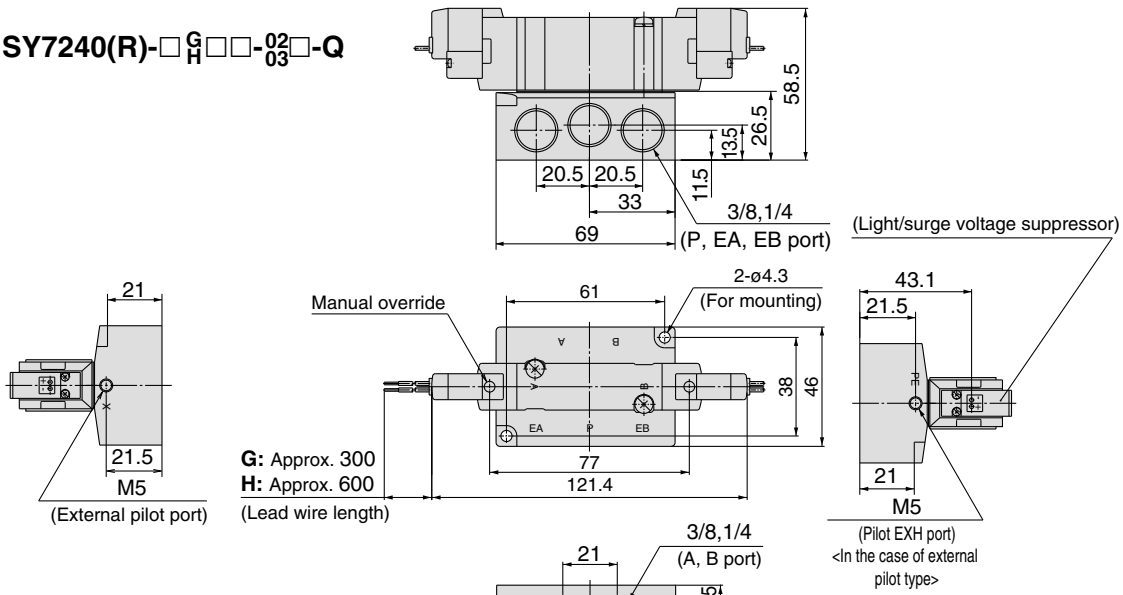

With interface regulator

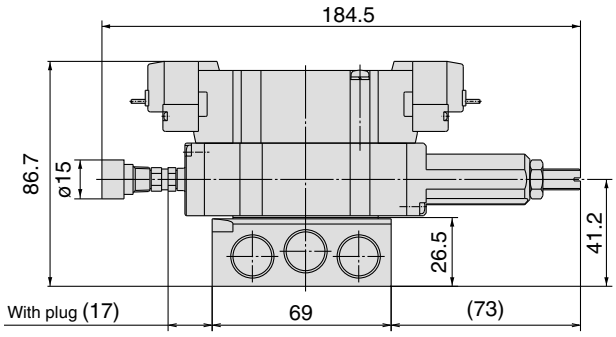

L plug connector: L
SY7240(R)-□L□□-$^{02}_{03}$□-Q

M plug connector: M
SY7240(R)-□M□□-$^{02}_{03}$□-Q

DIN terminal (D):
SY7240(R)-□D□□-$^{02}_{03}$□-Q

M8 connector (WO):
SY7240(R)-□WO□□-$^{02}_{03}$□-Q

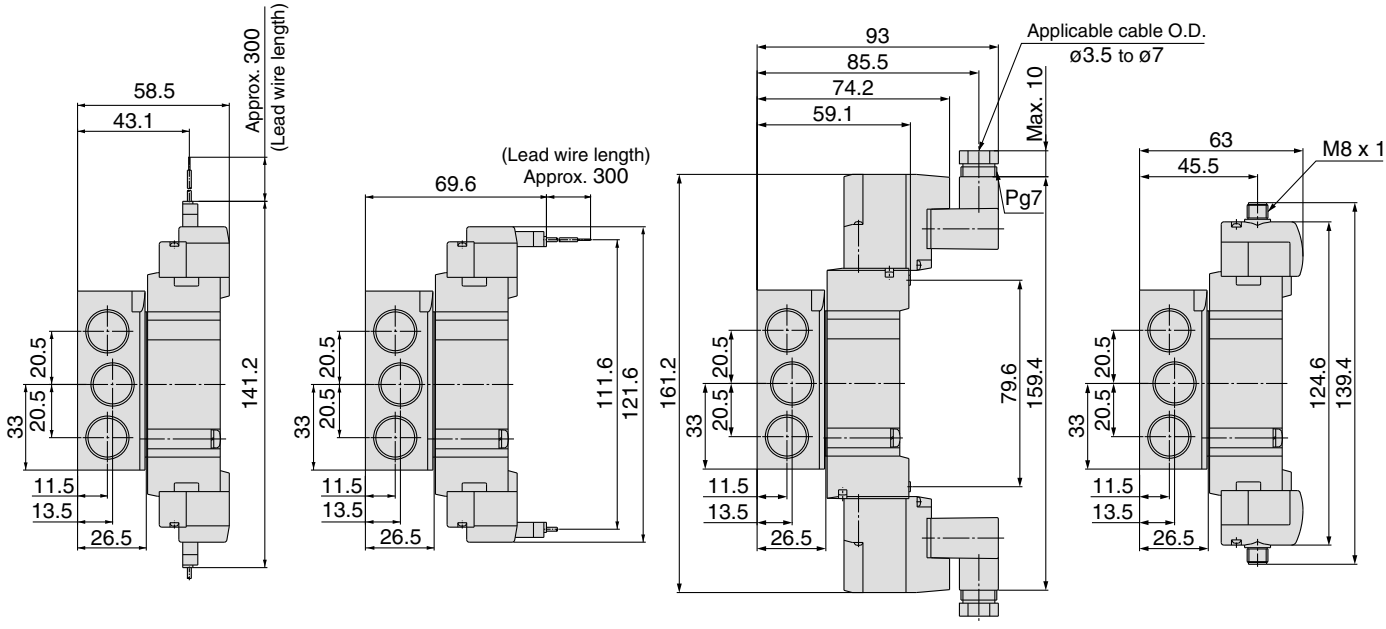

Note) Refer to back page 12 for dimensions of connector types.

Dimensions: Series SY7000

3 position closed center / exhaust center / pressure center

Grommet (G), (H): SY7$^{3}_{5}$40(R)-□$^{G}_{H}$□□-$^{02}_{03}$□-Q

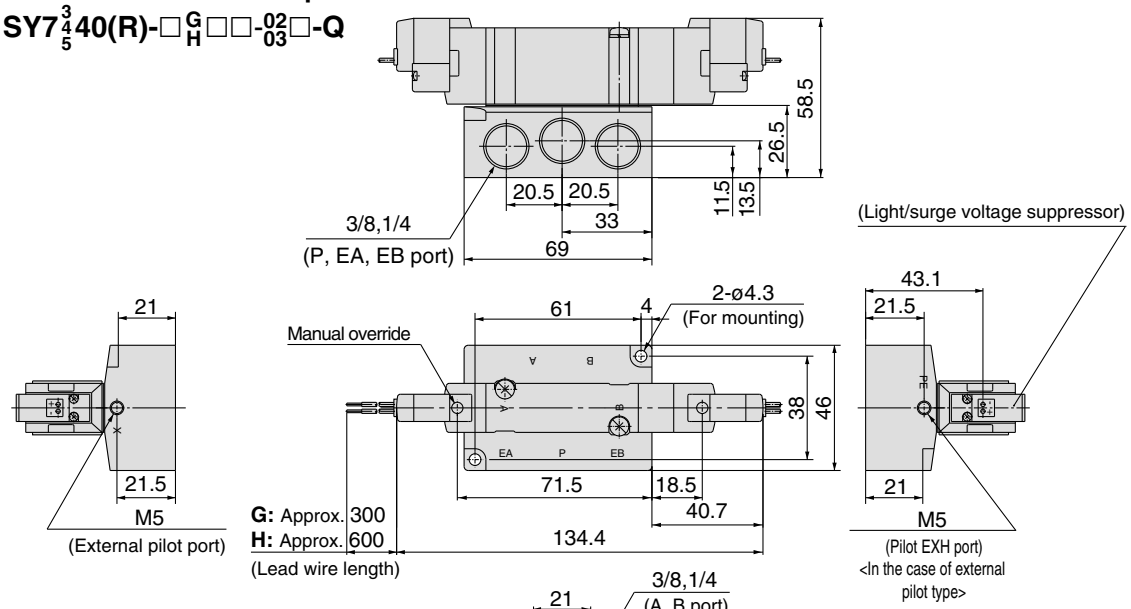

With interface regulator

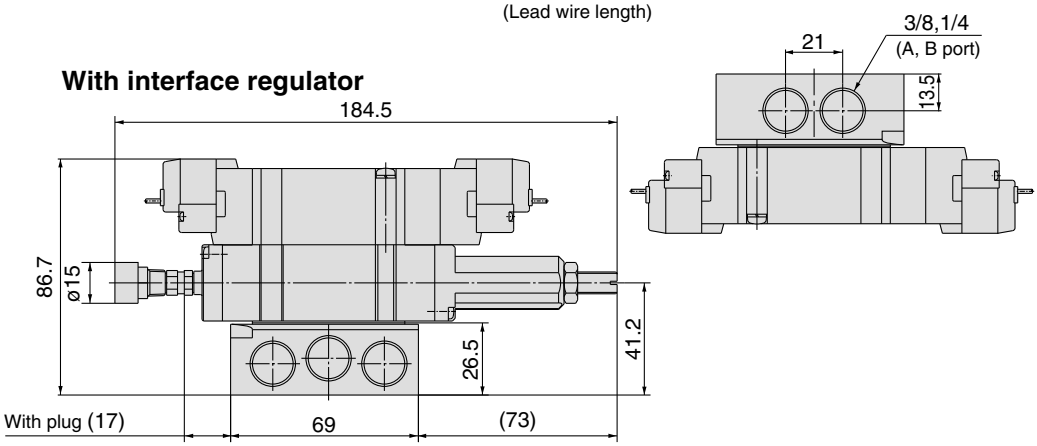

L plug connector: L
SY7$^{3}_{5}$40(R)-□L□□-$^{02}_{03}$□-Q

M plug connector: M
SY7$^{3}_{5}$40(R)-□M□□-$^{02}_{03}$□-Q

DIN terminal (D):
SY7$^{3}_{5}$40(R)-□D□□-$^{02}_{03}$□-Q

M8 connector (WO):
SY7$^{3}_{5}$40(R)-□WO□□-$^{02}_{03}$□-Q

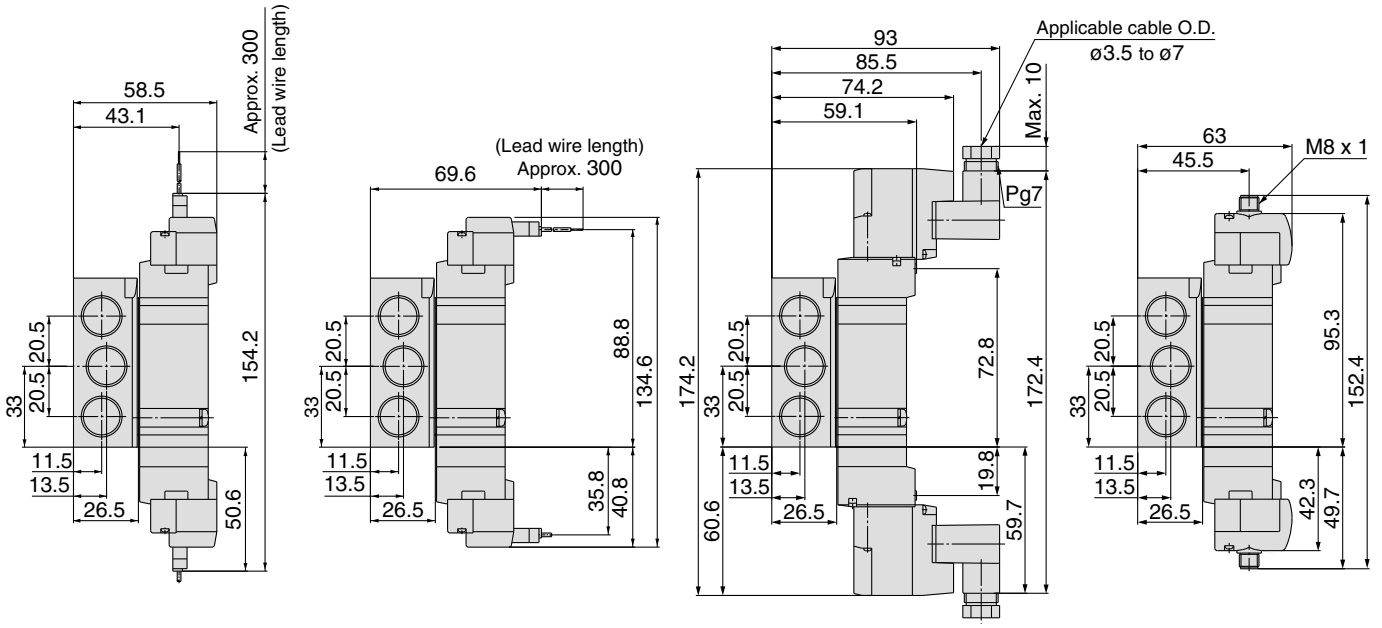

Note) Refer to back page 12 for dimensions of connector types.

Dimensions: Series SY9000

2 position single
Grommet (G), (H): SYJ9140-□$^{G}_{H}$□□-$^{03}_{04}$□-Q

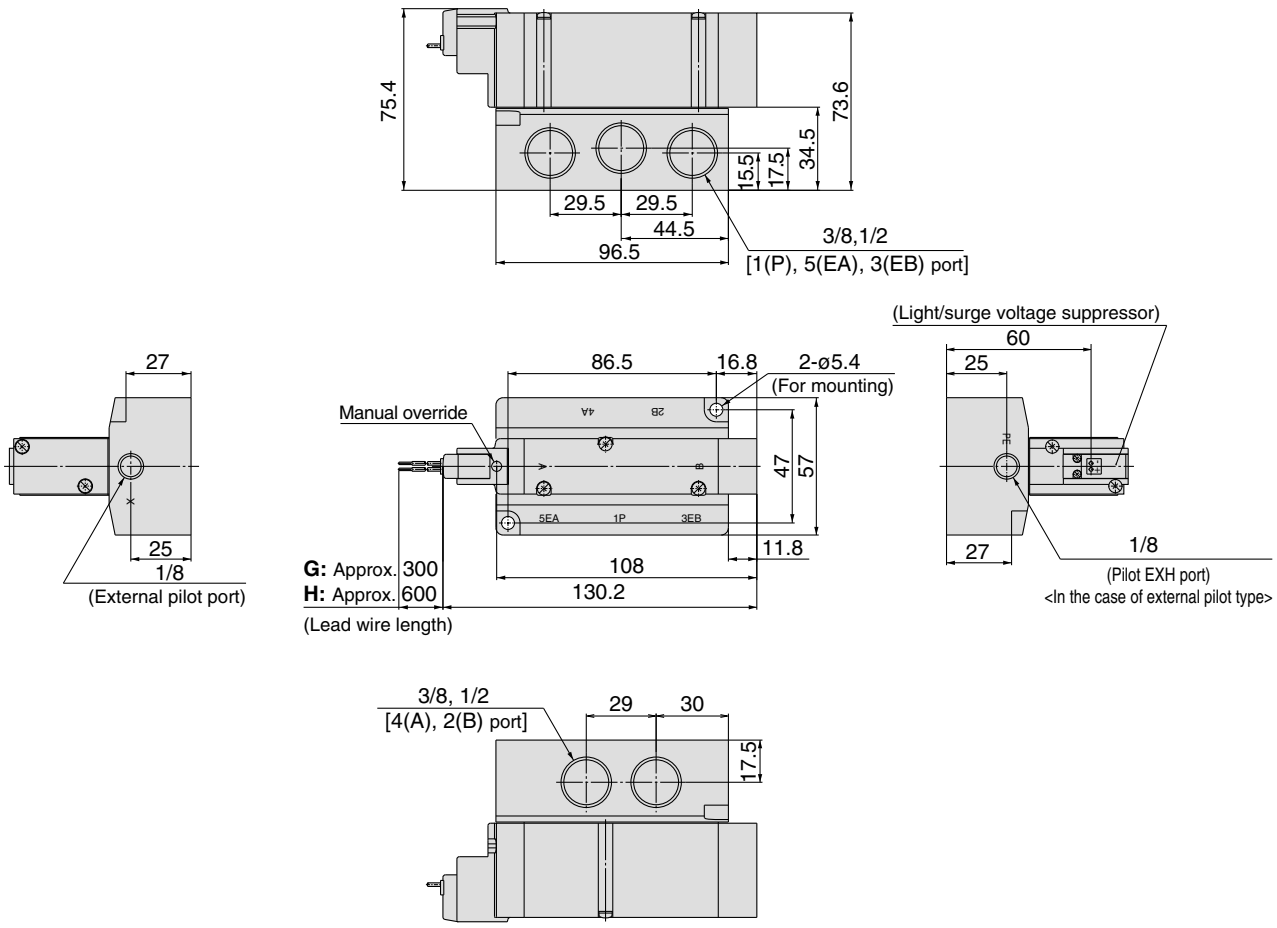

L plug connector (L):
SY9140(R)-□L□□-$^{03}_{04}$□-Q

M plug connector (M):
SY9140(R)-□M□□-$^{03}_{04}$□-Q

DIN terminal (D):
SY9140(R)-□D□□-$^{03}_{04}$□-Q

M8 connector (WO):
SY9140(R)-□WO□□-$^{03}_{04}$□-Q

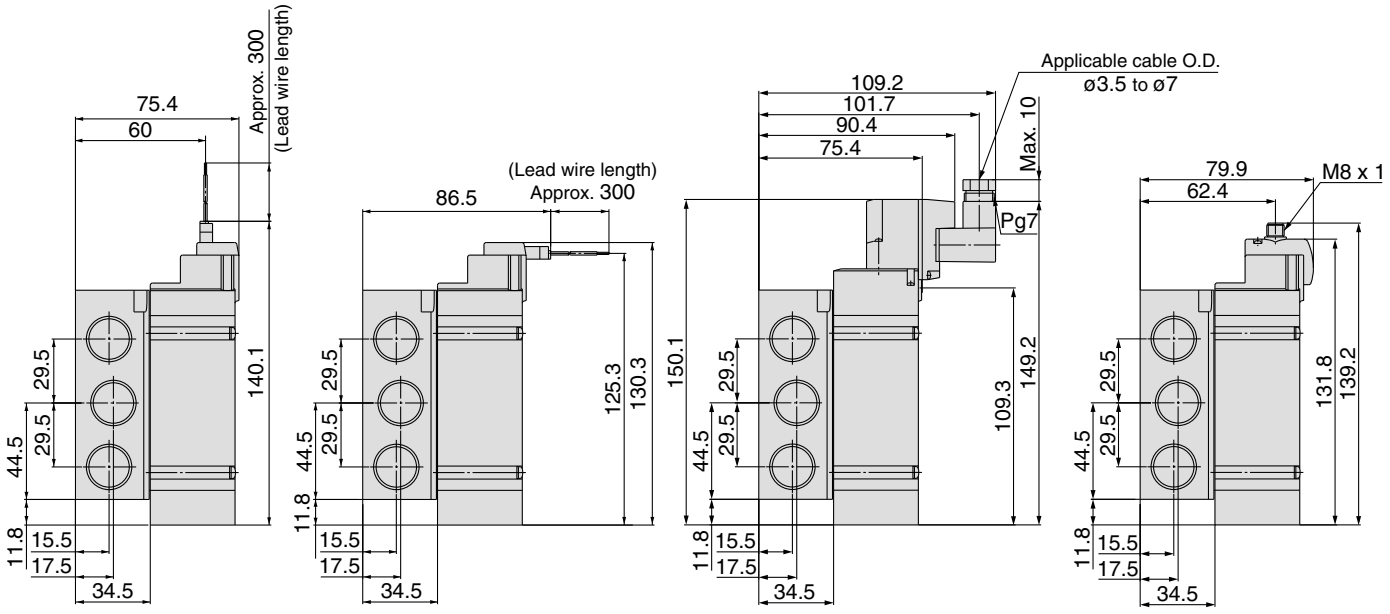

Note) Refer to back page 12 for dimensions of connector types.

Dimensions: Series SY9000

2 position double
Grommet (G), (H): SY9240(R)-□$^{G}_{H}$□□-$^{03}_{04}$□-Q

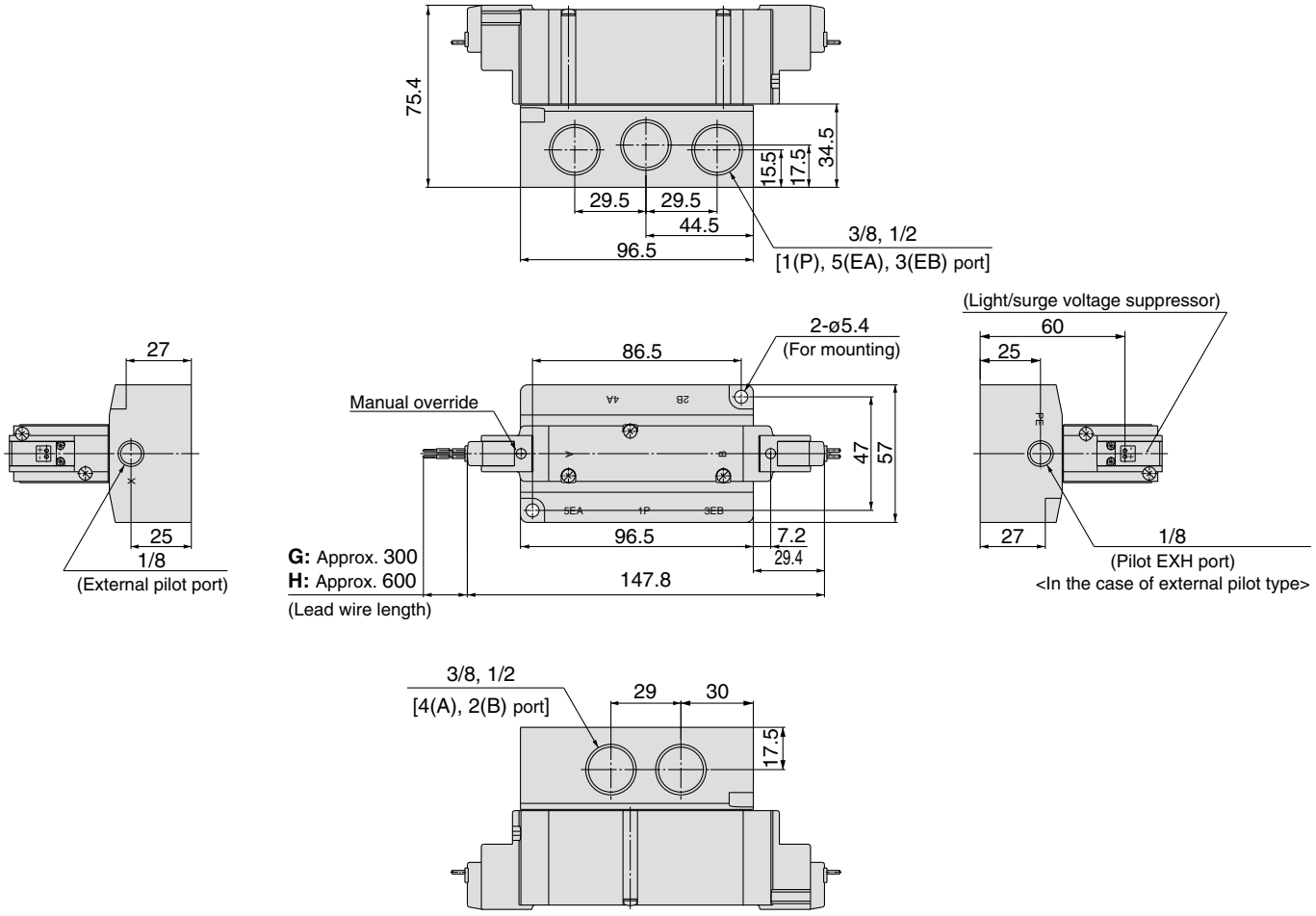

L plug connector (L): SY9240(R)-□L□□-$^{03}_{04}$□-Q

M plug connector (M): SY9240(R)-□M□□-$^{03}_{04}$□-Q

DIN terminal (D): SY9240(R)-□D□□-$^{03}_{04}$□-Q

M8 connector (WO): SY9240(R)-□WO□□-$^{03}_{04}$□-Q

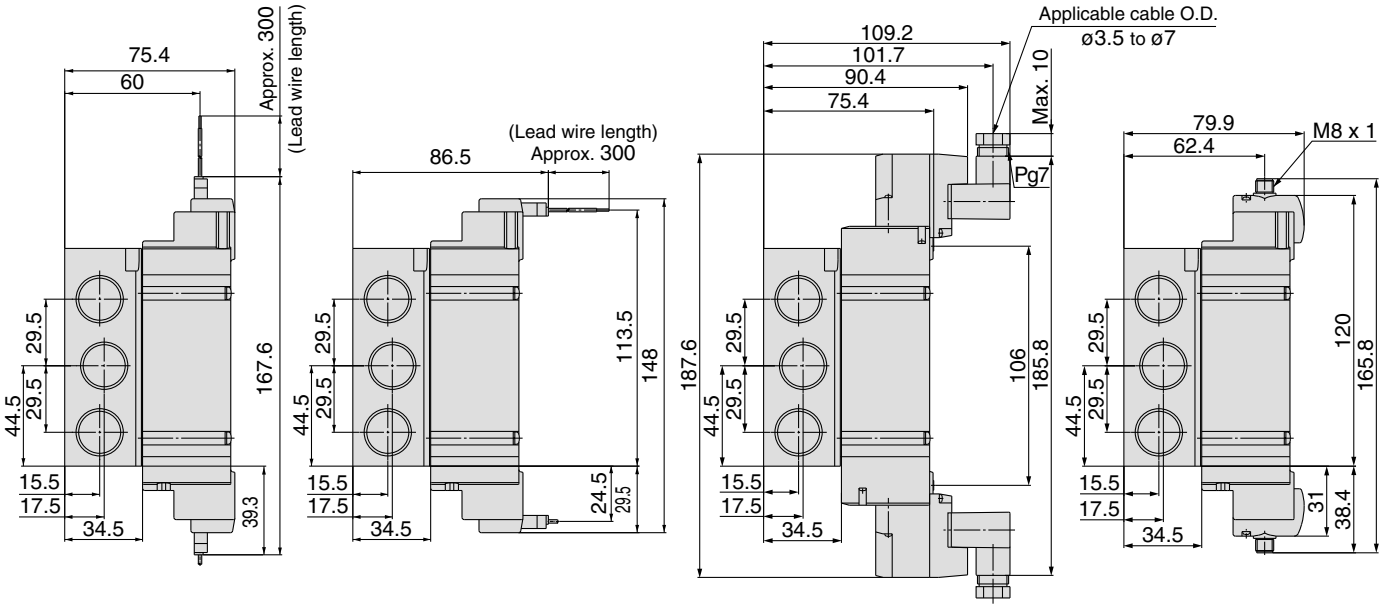

Note) Refer to back page 12 for dimensions of connector types.

Dimensions: Series SY9000

3 position closed center / exhaust center / pressure center

Grommet (G), (H): SY9$^{3}_{5}$40-□$^{G}_{H}$□□-$^{03}_{04}$□-Q

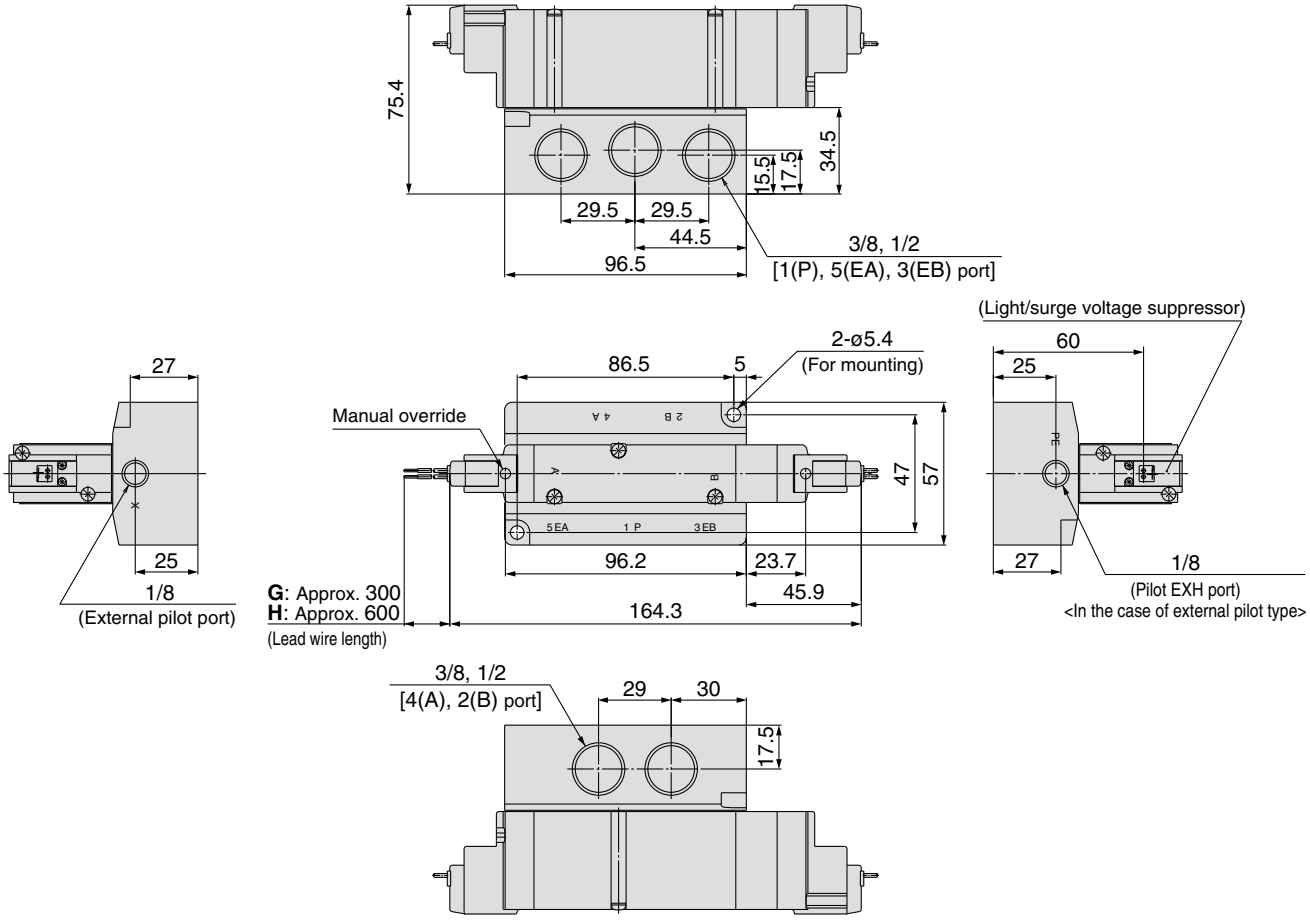

L plug connector (L):
SY9$^{3}_{5}$40(R)-□L□□-$^{03}_{04}$□-Q

M plug connector (M):
SY9$^{3}_{5}$40(R)-□M□□-$^{03}_{04}$□-Q

DIN terminal (D):
SY9$^{3}_{5}$40(R)-□D□□-$^{03}_{04}$□-Q

M8 connector (WO):
SY9$^{3}_{5}$40(R)-□WO□□-$^{03}_{04}$□-Q

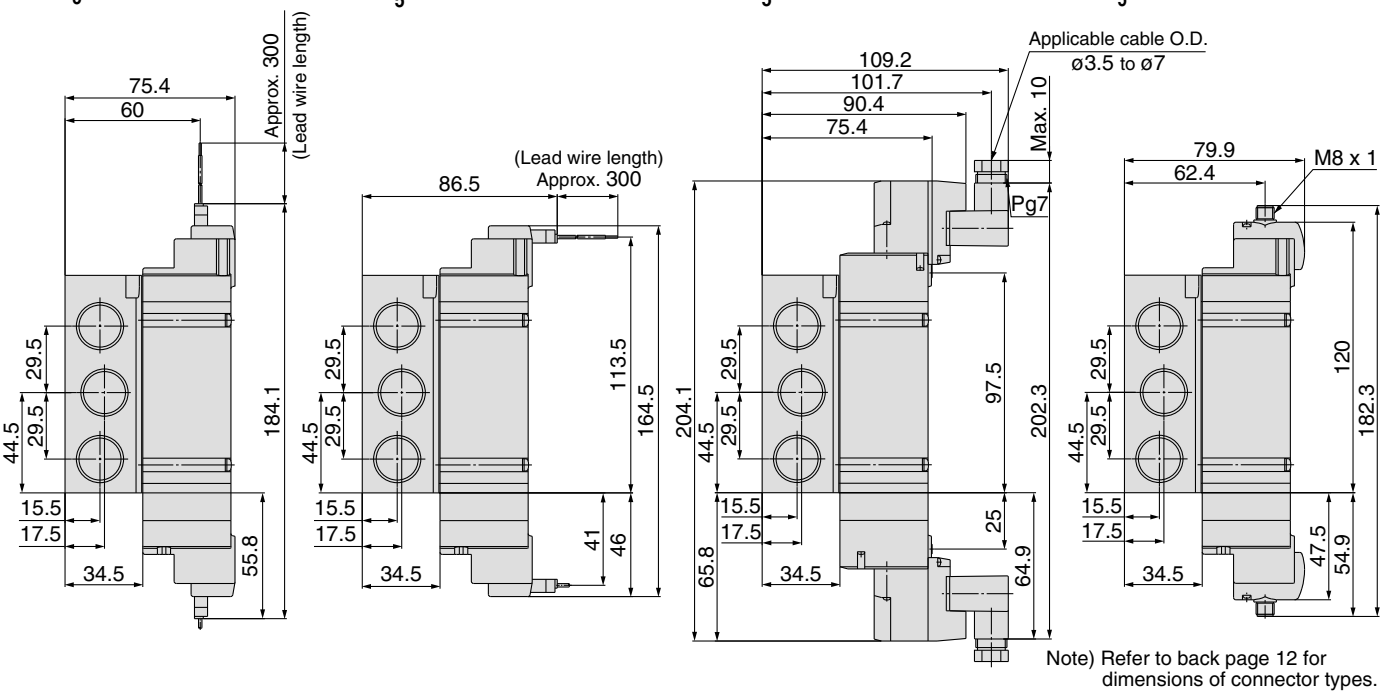

Note) Refer to back page 12 for dimensions of connector types.

Type 20

5 Port Solenoid Valve
Series SY3000/5000/7000
Body Ported
Bar Stock Type/Individual Wiring

CE UK CA

How to Order Manifold

SS5Y [5] — 20 — [05] — [ ] -Q

Manifold series

3	SY3000
5	SY5000
7	SY7000

Thread type

-	Rc
00F	G
00N	NPT
00T	NPTF

Stations

02	2 stations
⋮	⋮
20	20 stations

∗ This also includes the number of blanking plate assemblies.

How to Order Valve Manifold Assembly (Example)

Example

Cylinder port size
C6: With one-touch fitting for ø6

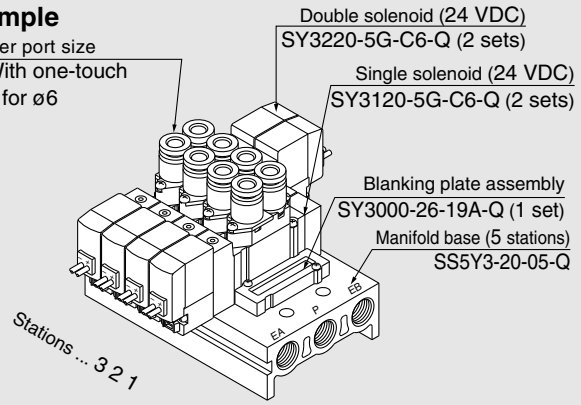

SS5Y3-20-05-Q 1 set (Type 20, 5 station manifold base part no.)
∗ SY3000-26-19A-Q 1 set (Blanking plate assembly part no.)
∗ SY3120-5G-C6-Q 2 sets (Single solenoid part no.)
∗ SY3220-5G-C6-Q 2 sets (Double solenoid part no.)
→ The asterisk denotes the symbol for assembly. Prefix it to the part nos. of the solenoid valve, etc.

Add the valve and option part number under the manifold base part number. In the case of complex arrangement, specify them on the manifold specification sheet.

How to Order Valve

SY 5 1 20 □ – 5 L □ □ – 01 □ □ -Q

Series

3	SY3000
5	SY5000
7	SY7000

Type of actuation

1	2 position single
2	2 position double
3	3 position closed center
4	3 position exhaust center
5	3 position pressure center

Coil specifications

-	Standard
T	With power saving circuit (24 VDC, 12 VDC only)

∗ Power saving circuit is not available in the case of D, DO or W□ type.

Rated voltage

For DC

5	24 VDC
6	12 VDC
V	6 VDC
S	5 VDC
R	3 VDC

AC (50/60 Hz)

1	100 VAC
2	200 VAC
3	110 VAC [115 VAC]
4	220 VAC [230 VAC]

∗ DC specifications of type D and DO is only available with 12 and 24 VDC.
∗ AC specification is only available with D and DO type.

Electrical entry

24, 12, 6, 5, 3 VDC			24, 12 VDC/ 100, 110, 200, 220 VAC	24, 12, 6, 5, 3 VDC
Grommet	**L plug connector**	**M plug connector**	**DIN terminal** Note2)	**M8 connector** ∗
G: Lead wire length 300 mm **H**: Lead wire length 600 mm	**L**: With lead wire (Length 300 mm) **LN**: Without lead wire **LO**: Without connector	**M**: With lead wire (Length 300 mm) **MN**: Without lead wire **MO**: Without connector	**D**: With connector **DO**: Without connector	**WO**: Without connector cable **W□**: With connector cable Note 1)

∗ LN, MN type: with 2 sockets.
∗ For DIN terminal of SY3000 series, refer to back page 228.
∗ DIN terminal type "Y" which conforms to EN-175301-803C (former DIN43650C) is also available. For details, refer to page 227.
∗ For connector cable of M8 connector, refer to page 230.
∗ Connector M8 type "WA" conforming to IEC 60947-5-2 standard, is also available. For details, see page 211.

Note 1) Enter the cable length symbols in □. Please be sure to fill in the blank referring to page 231.
Note2) SY5000/7000 only).

Light/surge voltage suppressor

Electrical entry for G, H, L, M, W

-	Without light/surge voltage suppressor
S	With surge voltage suppressor
Z	With light/surge voltage suppressor
R	With surge voltage suppressor (Non-polar type)
U	With light/surge voltage suppressor (Non-polar type)

∗ Power saving circuit is only available in the "Z" type.

Electrical entry for D (SY5000/7000 only)

-	Without light/surge voltage suppressor
S	With surge voltage suppressor (Non-polar type)
Z	With light/surge voltage suppressor (Non-polar type)

∗ DOZ is not available.
∗ For AC voltage valves there is no "S" option. It is already built-in to the rectifier circuit.

Manual override

-	Non-locking push type
D	Push-turn locking slotted type
E	Push-turn locking lever type

Thread type

-	Rc
F	G
N	NPT
T	NPTF

Made to Order

—	—
X90	Main valve fluororubber

A, B port size

Thread piping

Symbol	Port size	Applicable series
M5	M5	SY3000
01	1/8	SY5000
02	1/4	SY7000

One-touch fitting (Metric size)

Symbol	Port size	Applicable series
C4	One-touch fitting for ø4	SY3000
C6	One-touch fitting for ø6	
C4	One-touch fitting for ø4	SY5000
C6	One-touch fitting for ø6	
C8	One-touch fitting for ø8	
C8	One-touch fitting for ø8	SY7000
C10	One-touch fitting for ø10	

One-touch fitting (Inch size)

Symbol	Port size	Applicable series
N3	One-touch fitting for ø5/32"	SY3000
N7	One-touch fitting for ø1/4"	
N3	One-touch fitting for ø5/32"	SY5000
N7	One-touch fitting for ø1/4"	
N9	One-touch fitting for ø5/16"	
N9	One-touch fitting for ø5/16"	SY7000
N11	One-touch fitting for ø3/8"	

Note) When placing an order for body ported solenoid valve as a single unit, mounting bolt for manifold and gasket are not attached. Order them separately, if necessary.
(For details, refer to catalogue in page 56.)

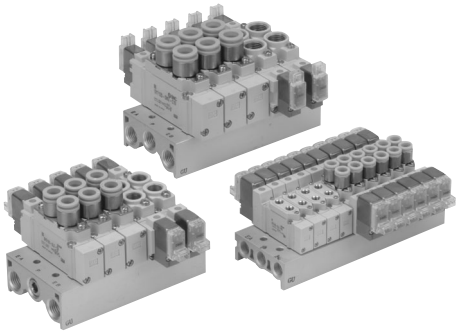

Manifold Specifications

Model		SS5Y3-20	SS5Y5-20	SS5Y7-20
Applicable valve		SY3□20	SY5□20	SY7□20
Manifold type		Single base/B mount		
P (SUP)/R (EXH)		Common SUP, Common EXH		
Valve stations		2 to 20 stations Note1)		
A, B port location		Valve		
Port size	P, EA, EB port	1/8	1/4	1/4
	A, B port	M5 C4(One-touch fitting for ø4) C6 (One-touch fitting for ø6)	1/8 C4 (One-touch fitting for ø4) C6 (One-touch fitting for ø6) C8 (One-touch fitting for ø8)	1/4 C8 (One-touch fitting for ø8) C10 (One-touch fitting for ø10)
Manifold base weight W (g) n: Stations		W = 13n + 35	W = 36n + 64	W = 43n + 64

Note 1) For more than 10 stations (more than 5 stations in case of SS5Y7), supply pressure to P port on both sides and exhaust from EA/EB port on both sides.
Note 2) Refer to “Manifold Option” on page 56.

Flow Characteristics

Model	Port size		Flow characteristics							
	1, 5, 3 (P, EA, EB)	4, 2 (A, B)	1 → 4/2 (P → A/B)				4/2 → 5/3 (A/B → EA/EB)			
			C (dm³/(s·bar))	b	Cv	Q[ℓ/min(ANR)]*	C (dm³/(s·bar))	b	Cv	Q[ℓ/min(ANR)]*
SS5Y3-20	1/8	C6	0.72	0.29	0.18	182	0.80	0.36	0.21	212
SS5Y5-20	1/4	C8	1.9	0.28	0.48	477	2.2	0.20	0.53	527
SS5Y7-20	1/4	C10	3.6	0.31	0.93	921	3.6	0.27	0.88	898

Note) The value is for manifold base with 5 stations and individually operated 2 position type.
* These values have been calculated according to ISO6358 and represent the flow rate measured in standard conditions at an upstream pressure of 0.6 MPa (relative pressure) and a differential pressure of 0.1MPa.

SY3000: SS5Y3-20-Stations - -Q

Grommet (G)

Dimensions when mounting individual EXH spacer

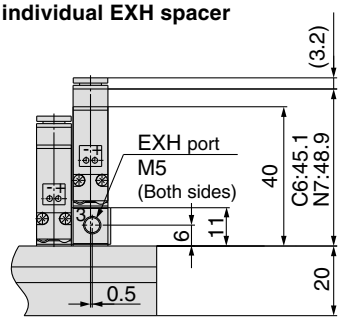

Dimensions when mounting individual SUP spacer

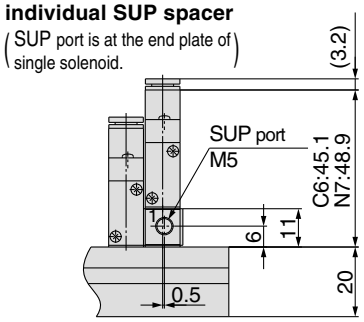

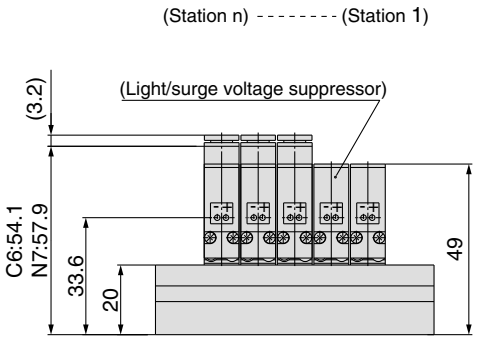

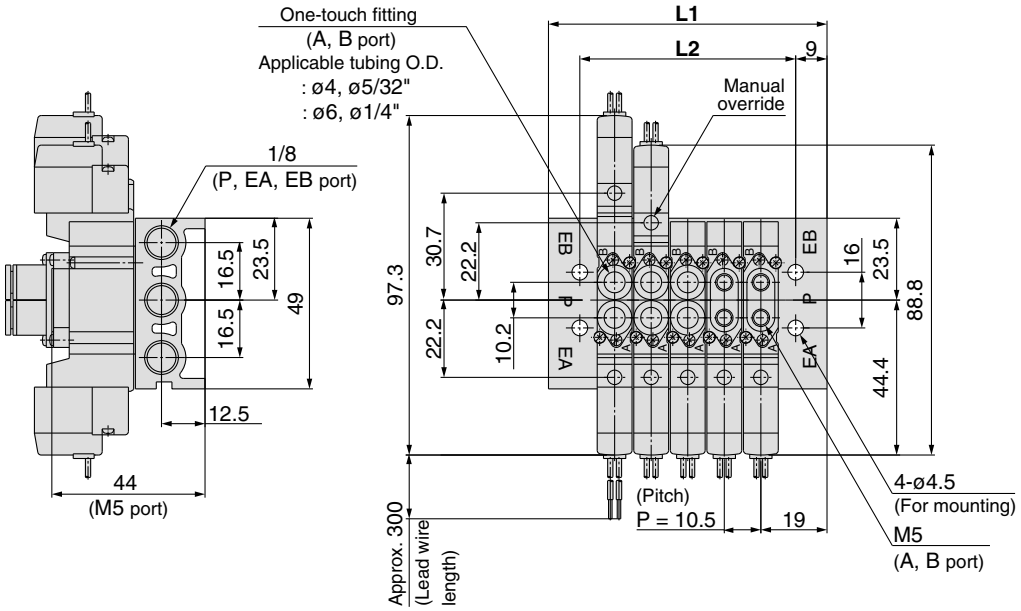

L plug connector (L)

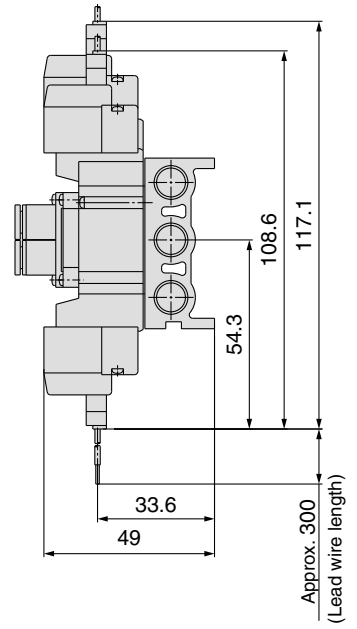

M plug connector (M)

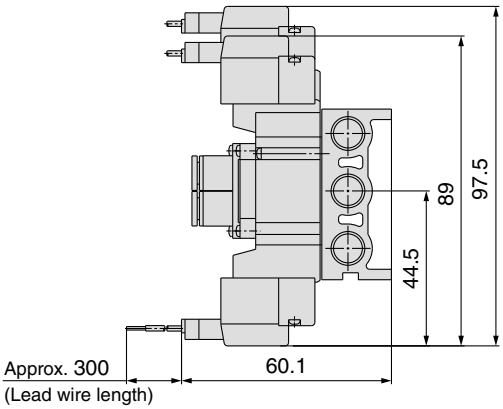

M8 connector (WO)

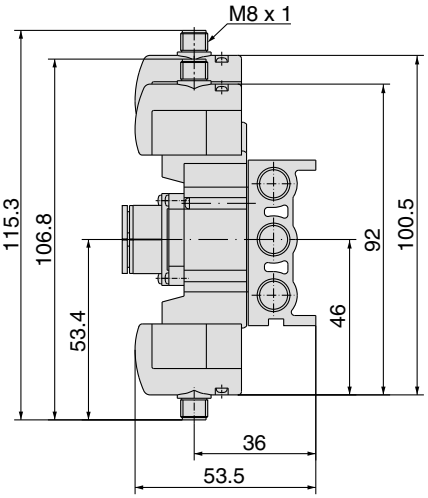

Note) Refer to back page 12 for dimensions of connector types.

Stations n	2 stations	3	4	5	6	7	8	9	10	11	12	13	14	15	16	17	18	19	20 stations
L1	40	50.5	61	71.5	82	92.5	103	113.5	124	134.5	145	155.5	166	176.5	187	197.5	208	218.5	229
L2	30.5	41	51.5	62	72.5	83	93.5	104	114.5	125	135.5	146	156.5	167	177.5	188	198.5	209	219.5

SY5000: SS5Y5-20-Stations-□-Q

Grommet (G)

Dimensions when mounting individual EXH spacer

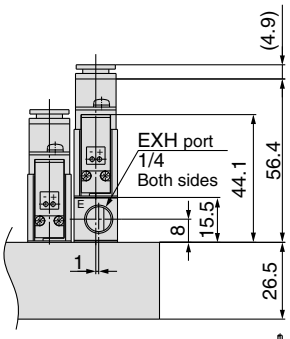

Dimensions when mounting individual SUP spacer

(SUP port is at the end plate of single solenoid.)

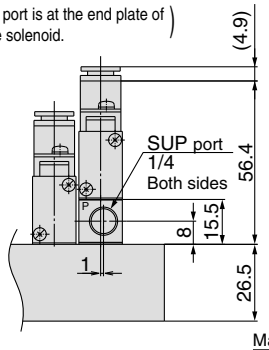

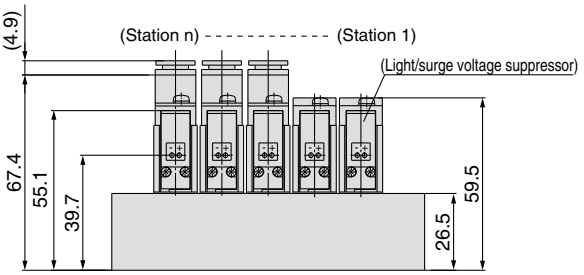

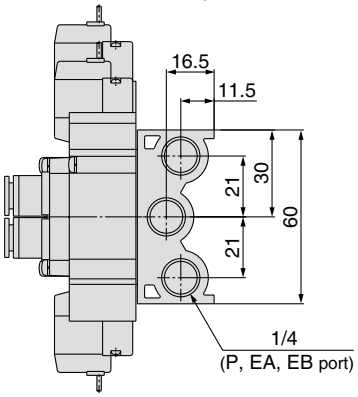

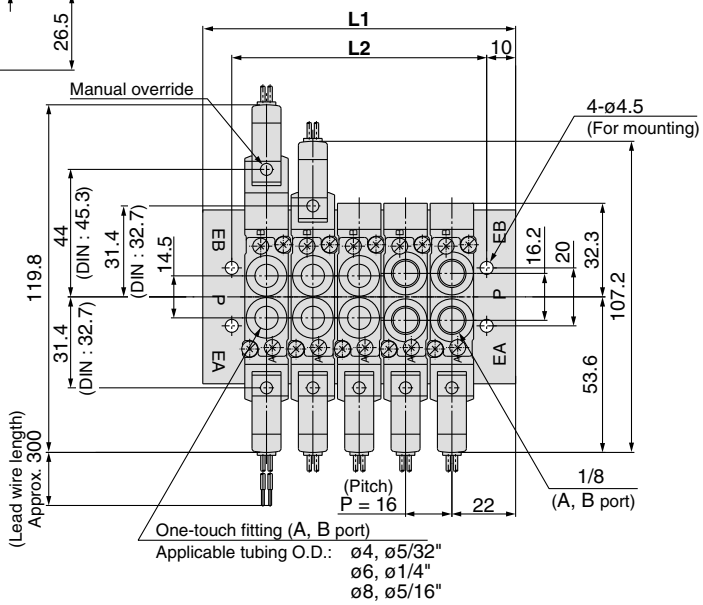

L plug connector (L) **M plug connector (M)** **DIN terminal (D)** **M8 connector (WO)**

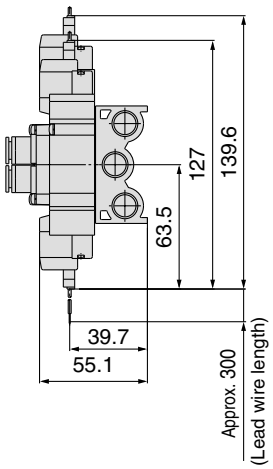

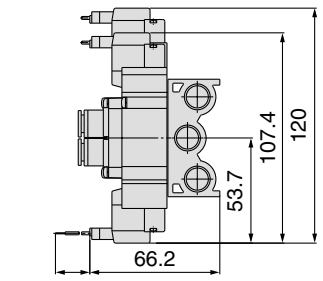

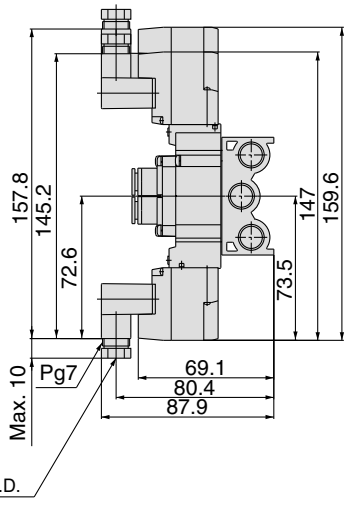

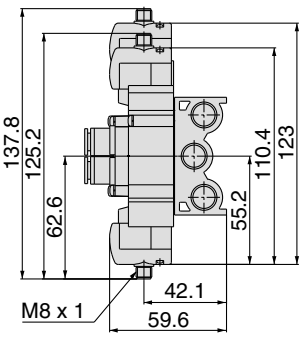

Note) Refer to back page 12 for dimensions of connector types.

Stations n	2 stations	3	4	5	6	7	8	9	10	11	12	13	14	15	16	17	18	19	20 stations
L1	60	76	92	108	124	140	156	172	188	204	220	236	252	268	284	300	316	332	348
L2	40	56	72	88	104	120	136	152	168	184	200	216	232	248	264	280	296	312	328

SY7000: SS5Y7-20-Stations - -Q

Grommet (G)

Dimensions when mounting individual EXH spacer

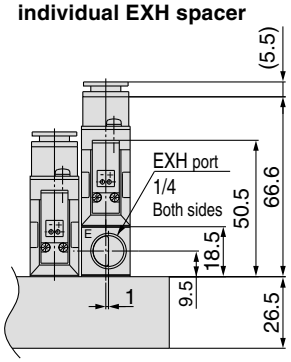

Dimensions when mounting individual SUP spacer

(SUP port is at the end plate of single solenoid.)

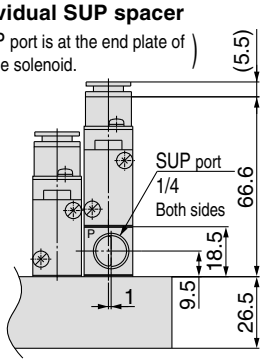

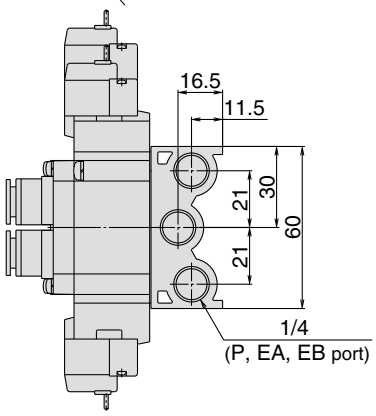

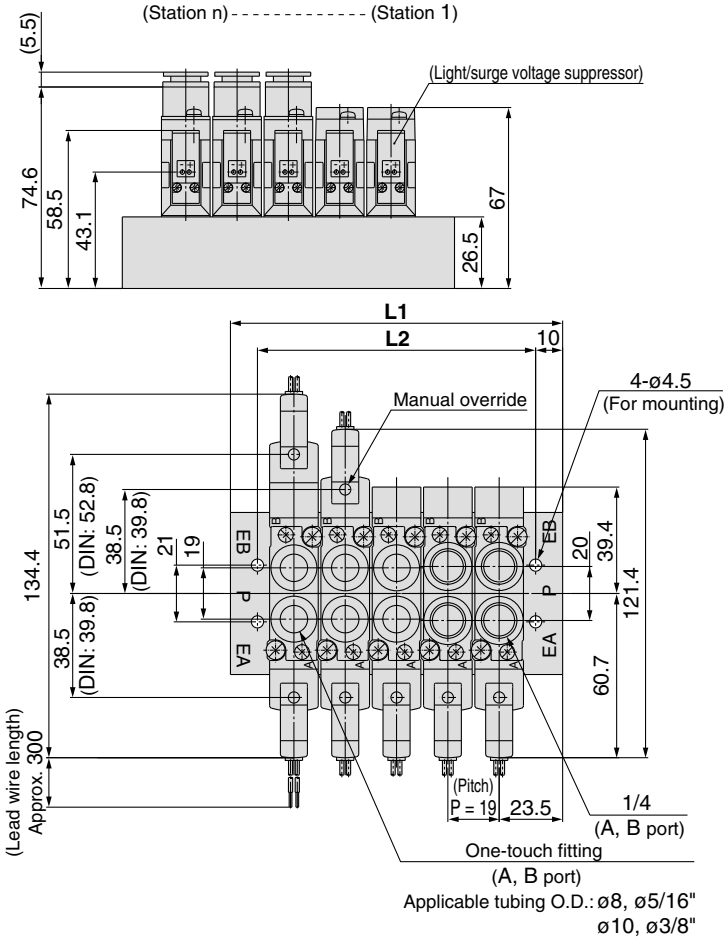

L plug connector (L)

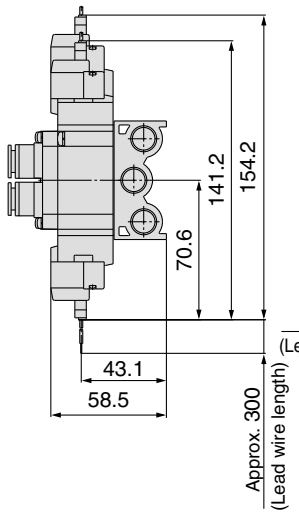

M plug connector (M)

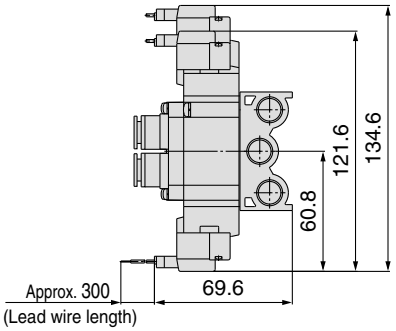

DIN terminal (D)

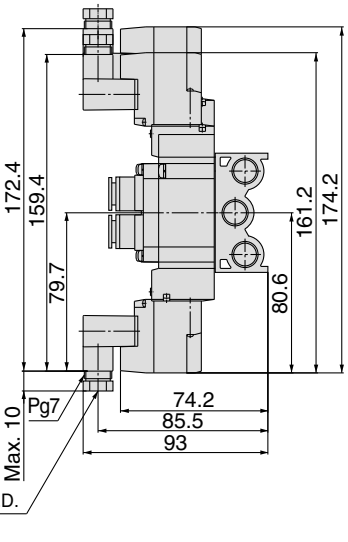

M8 connector (WO)

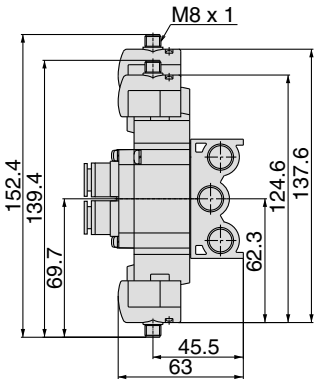

Note) Refer to back page 12 for dimensions of connector types.

Stations n	2 stations	3	4	5	6	7	8	9	10	11	12	13	14	15	16	17	18	19	20 stations
L1	55	74	93	112	131	150	169	188	207	226	245	264	283	302	321	340	359	378	397
L2	46	65	84	103	122	141	160	179	198	217	236	255	274	293	312	331	350	369	388

Type 23

5 Port Solenoid Valve
Series SY9000
Body Ported
Stacking Type/Individual Wiring

CE UK CA

How to Order Manifold

SS5Y 9 — 23 — 05 — [ ] — [ ] -Q

Manifold series

9	SY9000

Valve stations

Symbol	Stations
02	2 stations
⋮	⋮
20	20 stations

∗ This also includes the number of blanking plate assemblies.

Thread type

-	Rc
00F	G
00N	NPT
00T	NPTF

Option

Symbol	Mounting
-	Direct mounting
D	DIN rail mounting (with DIN rail)
D0	DIN rail mounting (without DIN rail)
D∗	When a longer DIN rail is desired than the specified stations, specify the station number to be required into ∗ mark.

∗ Type 23 manifold of Series SY9000 is concurrently used for the internal and external pilot.

How to Order Valve Manifold Assembly (Example)

Example

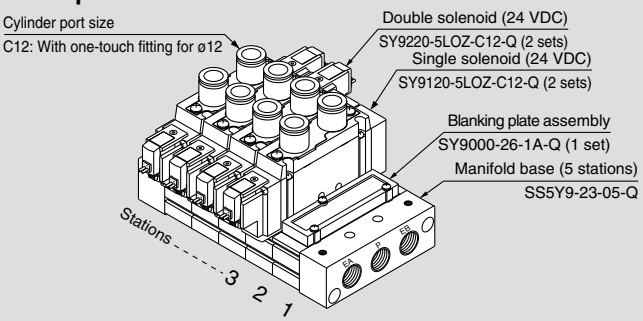

SS5Y9-23-05-Q **1 set (Type 23, 5 station manifold base part no.)**
∗ SY9000-26-1A-Q **1 set (Blanking plate assembly part no.)**
∗ SY9120-5LOZ-C12-Q **2 sets (Single solenoid part no.)**
∗ SY9220-5LOZ-C12-Q **2 sets (Double solenoid part no.)**

→ The asterisk denotes the symbol for assembly.
Prefix it to the part nos. of the solenoid valve, etc.

Add the valve and option part number under the manifold base part number. In the case of complex arrangement, specify them on the manifold specification sheet.

How to Order Valve

SY 9 1 20 □ □ – 5 L □ □ – 02 □ □ -Q

Series

9	SY9000

Type of actuation

1	2 position single
2	2 position double
3	3 position closed center
4	3 position exhaust center
5	3 position pressure center

Pilot specifications

-	Internal pilot
R	External pilot

∗ In the case of external pilot specifications, it cannot be used as a single unit.

Coil specifications

-	Standard
T	With power saving circuit (24 VDC, 12 VDC only)

∗ Power saving circuit is not available in the case of D, DO or W□ type.

Rated voltage

For DC

5	24 VDC
6	12 VDC
V	6 VDC
S	5 VDC
R	3 VDC

For AC (50/60 Hz)

1	100 VAC
2	200 VAC
3	110 VAC [115 VAC]
4	220 VAC [230 VAC]

∗ DC specifications of type D and DO is only available with 12 and 24 VDC.
∗ AC specification is only available with D and DO type.

Manual override

-	Non-locking push type
D	Push-turn locking slotted type
E	Push-turn locking lever type

Light/surge voltage suppressor

Electrical entry for G, H, L, M, W

-	Without light/surge voltage suppressor
S	With surge voltage suppressor
Z	With light/surge voltage suppressor
R	With surge voltage suppressor (Non-polar type)
U	With light/surge voltage suppressor (Non-polar type)

∗ Power saving circuit is only available in the "Z" type.

Electrical entry for D

-	Without light/surge voltage suppressor
S	With surge voltage suppressor
Z	With light/surge voltage suppressor

∗ DOZ is not available.
∗ For AC voltage valves there is no "S" option. It is already built-in to the rectifier circuit.

Electrical entry

24, 12, 6, 5, 3 VDC			24, 12 VDC/ 100, 110, 200, 220 VAC	24, 12, 6, 5, 3 VDC
Grommet	**L plug connector**	**M plug connector**	**DIN terminal**	**M8 connector** ∗
G: Lead wire length 300 mm **H**: Lead wire length 600 mm	**L**: With lead wire (Length 300 mm) **LN**: Without lead wire **LO**: Without connector	**M**: With lead wire (Length 300 mm) **MN**: Without lead wire **MO**: Without connector	**D**: With connector **DO**: Without connector	**WO**: Without connector cable **W□**: With connector cable Note 1)

∗ LN, MN type: with 2 sockets.
∗ DIN terminal type "Y" which conforms to EN-175301-803C (former DIN43650C) is also available. For details, refer to page 227.
∗ For connector cable of M8 connector, refer to page 230.
∗ Connector M8 type "WA" conforming to IEC 60947-5-2 standard, is also available. For details, see page 211.
Note 1) Enter the cable length symbols in □. Please be sure to fill in the blank referring to page 231.

Made to Order

—	—
X90	Main valve fluororubber

Thread type

Nil	Rc
F	G
N	NPT
T	NPTF

A, B port size

Thread piping

Symbol	Port size
02	1/4
03	3/8

One-touch fitting (Metric size)

Symbol	Port size
C8	One-touch fitting for ø8
C10	One-touch fitting for ø10
C12	One-touch fitting for ø12

One-touch fitting (Inch size)

Symbol	Port size
N9	One-touch fitting for ø5/16"
N11	One-touch fitting for ø3/8"

Note) When placing an order for body ported solenoid valve as a single unit, mounting bolt for manifold and gasket are not attached. Order them separately, if necessary.
For details, refer to page 56.

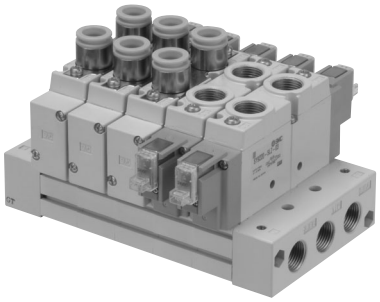

Manifold Specifications

Model		SS5Y9-23
Applicable valve		SY9□20
Manifold type		Stacking type
P (SUP)/R (EXH)		Common SUP, Common EXH
Valve stations		2 to 20 stations Note1)
A, B port location		Valve
Port size	P, EA, EB port	3/8
	A, B port	1/4 3/8 C8 (One-touch fitting for ø8) C10 (One-touch fitting for ø10) C12 (One-touch fitting for ø12)
Manifold base weight W (g) n: Stations		W = 66n + 246

Note 1) For more than 10 stations, supply pressure to P port on both sides and exhaust from EA/EB port on both sides.

Note 2) Refer to “Manifold Option” on page 56.

Flow Characteristics

Model	Port size		Flow characteristics							
	1, 5, 3 (P, EA, EB)	4, 2 (A, B)	1→4/2 (P→A/B)				4/2→5/3 (A/B→EA/EB)			
			C (dm³/(s·bar))	b	Cv	Q[ℓ/min/ANR)]*	C (dm³/(s·bar))	b	Cv	Q[ℓ/min/ANR)]*
SS5Y9-23	3/8	C12	6.3	0.20	1.5	1509	8.2	0.28	1.9	2059

Note) The value is for manifold base with 5 stations and individually operated 2 position type.

* These values have been calculated according to ISO6358 and represent the flow rate measured in standard conditions at an upstream pressure of 0.6 MPa (relative pressure) and a differential pressure of 0.1MPa.

SY9000: SS5Y9-23-[Stations]-(D)-□(D)-Q

Grommet (G)

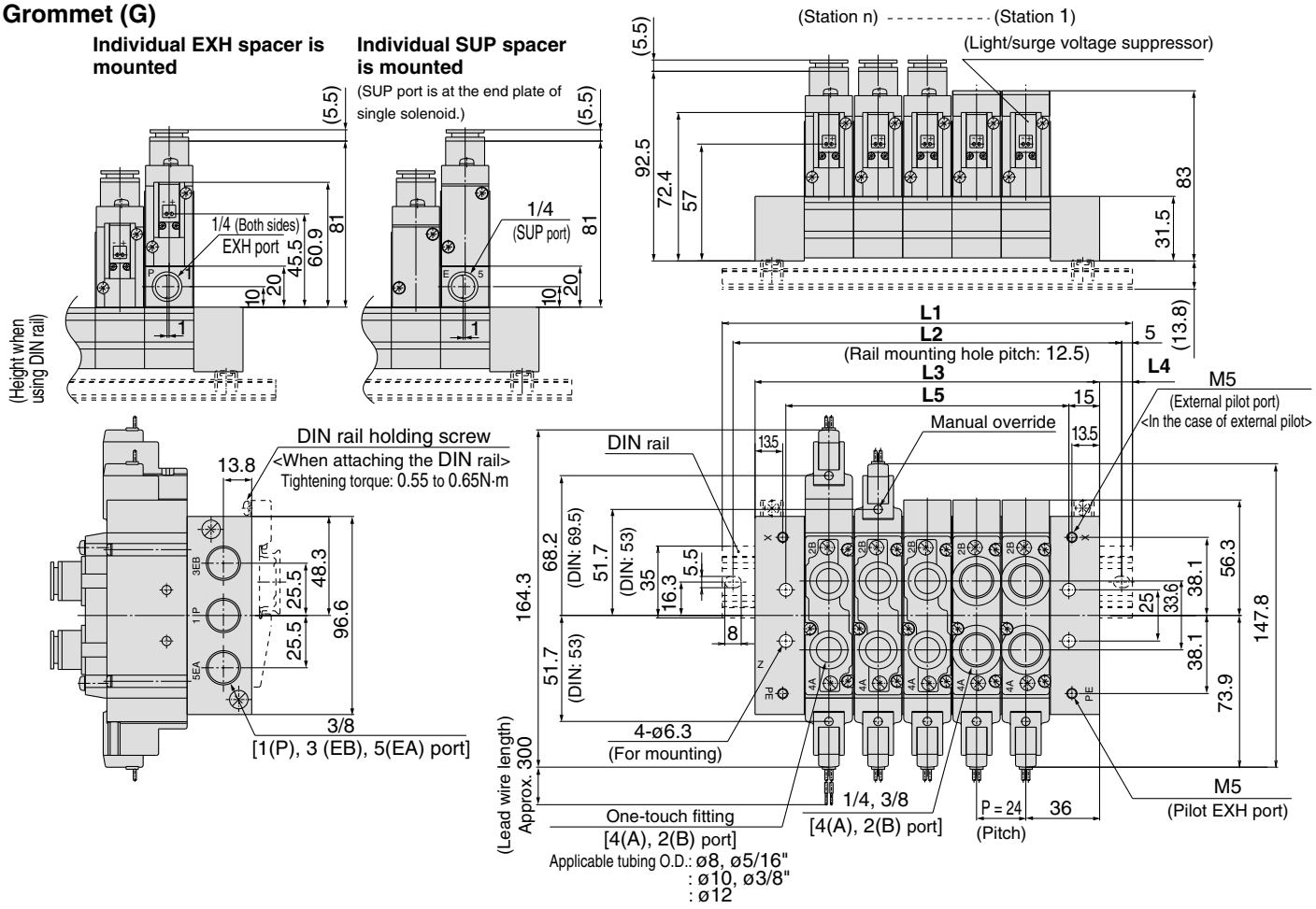

L plug connector (L)

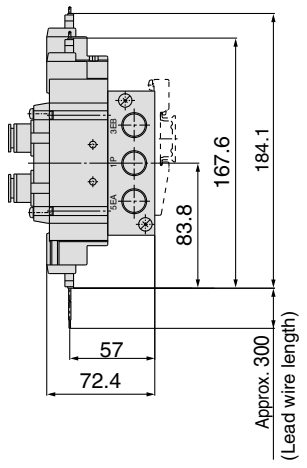

M plug connector (M)

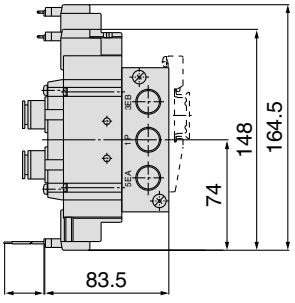

DIN terminal (D)

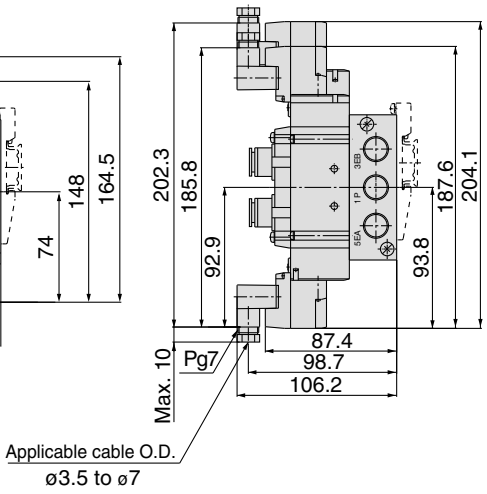

M8 connector (WO)

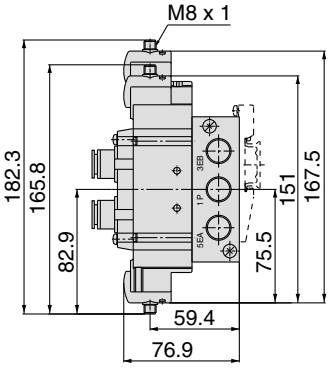

Note) Refer to back page 12 for dimensions of connector types.

Stations n	2 stations	3	4	5	6	7	8	9	10	11	12	13	14	15	16	17	18	19	20 stations
L1	123	148	173	198	223	248	273	298	323	335.5	360.5	385.5	410.5	435.5	460.5	485.5	510.5	535.5	560.5
L2	112.5	137.5	162.5	187.5	212.5	237.5	262.5	287.5	312.5	325	350	375	400	425	450	475	500	525	550
L3	96	120	144	168	192	216	240	264	288	312	336	360	384	408	432	456	480	504	528
L4	13.5	14	14.5	15	15.5	16	16.5	17	17.5	12	12.5	13	13.5	14	14.5	15	15.5	16	16.5
L5	66	90	114	138	162	186	210	234	258	282	306	330	354	378	402	426	450	474	498

Note) In the case of direct mounting without DIN rail, total width of manifold is **L3**.

Type 20P

5 Port Solenoid Valve
Series SY3000/5000/7000
Body Ported
Bar Stock Type/Flat Ribbon Cable

How to Order Manifold

SS5Y [5] — 20P — [05] — [ ] -Q

Manifold series

3	SY3000
5	SY5000
7	SY7000

Thread type

-	Rc
00F	G
00N	NPT
00T	NPTF

Stations

03	3 stations
⋮	⋮
12	12 stations

Note) SS5Y3 has 4 to 12 stations.

How to Order Valve Manifold Assembly (Example)

Example

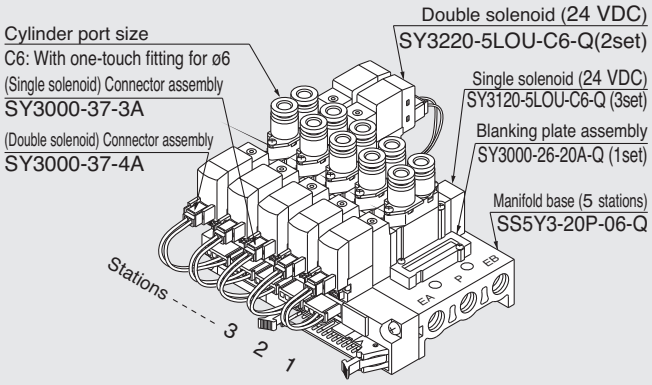

SS5Y3-20P-06-Q	**1 set (Type 20P, 6 station manifold part no.)**
***SY3000-26-20A-Q**	**1 set (Blanking plate assembly part no)**
***SY3120-5LOU-C6-Q**	**3 sets (Single solenoid part no.)**
***SY3220-5LOU-C6-Q**	**2 sets (Double solenoid part no.)**
***SY3000-37-3A**	**3 sets (Connector assembly part no.)**
***SY3000-37-4A**	**2 sets (Connector assembly part no.)**

→ The asterisk denotes the symbol for assembly. Prefix it to the part nos. of the solenoid valve, etc.

Add the valve and option part number under the manifold base part number. In the case of complex arrangement, specify them on the manifold specification sheet.

How to Order Valve

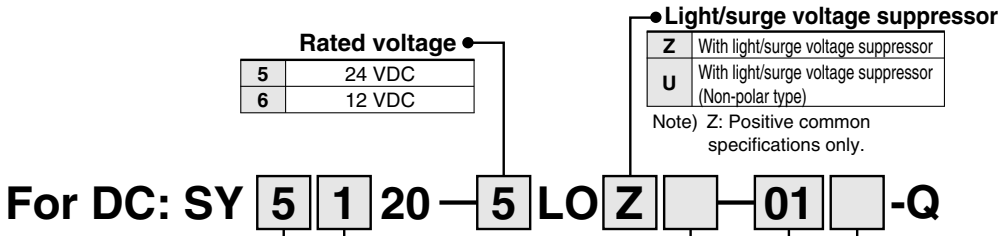

Rated voltage

5	24 VDC
6	12 VDC

Light/surge voltage suppressor

Z	With light/surge voltage suppressor
U	With light/surge voltage suppressor (Non-polar type)

Note) Z: Positive common specifications only.

Series

3	SY3000
5	SY5000
7	SY7000

Type of actuation

1	2 position single
2	2 position double
3	3 position closed center
4	3 position exhaust center
5	3 position pressure center

Manual override

-	Non-locking push type
D	Push-turn locking slotted type
E	Push-turn locking lever type

A, B port size

Thread piping

Symbol	Port size	Applicable series
M5	M5	SY3000
01	1/8	SY5000
02	1/4	SY7000

One-touch fitting (Metric size)

Symbol	Port size	Applicable series
C4	One-touch fitting for ø4	SY3000
C6	One-touch fitting for ø6	
C4	One-touch fitting for ø4	SY5000
C6	One-touch fitting for ø6	
C8	One-touch fitting for ø8	
C8	One-touch fitting for ø8	SY7000
C10	One-touch fitting for ø10	

Thread type

-	Rc
F	G
N	NPT
T	NPTF

∗ Except for M5

One-touch fitting (Inch size)

Symbol	Port size	Applicable series
N3	One-touch fitting for ø5/32"	SY3000
N7	One-touch fitting for ø1/4"	
N3	One-touch fitting for ø5/32"	SY5000
N7	One-touch fitting for ø1/4"	
N9	One-touch fitting for ø5/16"	
N9	One-touch fitting for ø5/16"	SY7000
N11	One-touch fitting for ø3/8"	

Note) When placing an order for body ported solenoid valve as a single unit, mounting bolt for manifold and gasket are not attached. Order them separately, if necessary.
(For details, refer to page 56.)

- **Multiple valve wiring is simplified through the use of the flat cable connector**
- **Clean appearance**

In the case of a flat ribbon cable type, each valve is wired on the print board of manifold base to allow the external wiring to be piped all together with 26 pins MIL connector.

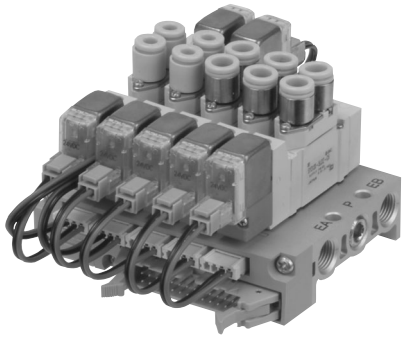

Manifold Specifications

Model		SS5Y3-20P	SS5Y5-20P	SS5Y7-20P
Applicable valve		SY3□20	SY5□20	SY7□20
Manifold type		Single base/B mount		
P (SUP)/R (EXH)		Common SUP, Common EXH		
Valve stations		4 to 12 stations(1)	3 to 12 stations Note 1)	
A, B port location		Valve		
Port size	P, EA, EB port	1/8	1/4	1/4
	A, B port	M5, C4 (One-touch fitting for ø4) C6 (One-touch fitting for ø6)	1/8 C4 (One-touch fitting for ø4) C6 (One-touch fitting for ø6) C8 (One-touch fitting for ø8)	1/4 C8 (One-touch fitting for ø8) C10 (One-touch fitting for ø10)
Manifold base weight W (g) n: Stations		W = 19n + 45	W = 43n + 77	W = 51n + 81
Applicable flat ribbon cable connector		Flat ribbon cable connector, Socket: 26 pins MIL type with strain relief, Conforming to MIL-C-83503		
Internal wiring		In common between +COM and –COM (Z type: +COM only).		
Rated voltage		12, 24 VDC		

Note 1) For more than 10 stations (more than 5 stations in case of SS5Y7), supply pressure to P port on both sides and exhaust from EA/EB port on both sides.
Note 2) The withstand voltage specification for the wiring unit section is JIS C 0704, Grade 1 or its equivalent.
Note 3) Refer to "Manifold Option" on page 56.

Flow Characteristics

Model	Port size		Flow characteristics							
	1, 5, 3 (P, EA, EB)	4, 2 (A, B)	1 → 4/2 (P → A/B)				4/2 → 5/3 (A/B → EA/EB)			
			C [dm³/(s·bar)]	b	Cv	Q[ℓ/min(ANR)]*	C [dm³/(s·bar)]	b	Cv	Q[ℓ/min(ANR)]*
SS5Y3-20P	1/8	C6	0.72	0.29	0.18	182	0.80	0.36	0.21	212
SS5Y5-20P	1/4	C8	1.9	0.28	0.48	477	2.2	0.20	0.53	527
SS5Y7-20P	1/4	C10	3.6	0.31	0.93	921	3.6	0.27	0.88	898

Note) The value is for manifold base with 5 stations and individually operated 2 position type.
* These values have been calculated according to ISO6358 and represent the flow rate measured in standard conditions at an upstream pressure of 0.6 MPa (relative pressure) and a differential pressure of 0.1MPa.

How to Order Connector Assembly

For 12, 24 VDC

For DC	For SY3000	For SY5000/7000
For single solenoid:	SY3000-37-3A	SY5000-37-3A
Double solenoid, 3 position type	SY3000-37-4A	SY5000-37-4A
Single with spacer assembly	SY5000-37-3A	SY5000-37-5A
Double, 3 position with spacer assembly	SY3000-37-6A	SY5000-37-6A

⚠Caution

- For non-polar (U) valves, the electrical DC connections can be used with either positive and negative COM. For type (Z), only use with positive COM as the valve does not operate correctly when used with negative COM.

Internal Wiring of Manifold (Non-polar type)

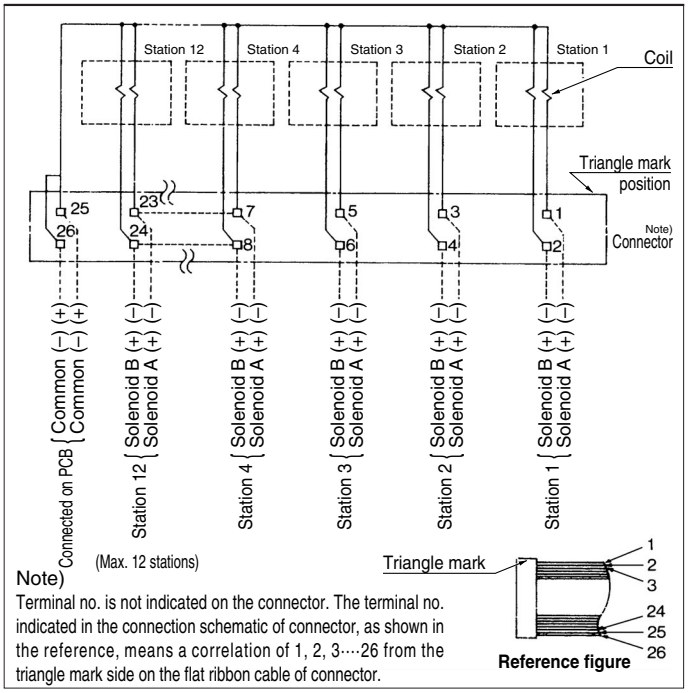

Note)
Terminal no. is not indicated on the connector. The terminal no. indicated in the connection schematic of connector, as shown in the reference, means a correlation of 1, 2, 3····26 from the triangle mark side on the flat ribbon cable of connector.

- For more than 10 stations, both poles of the common should be wired.
- For single solenoid, connect to the solenoid A side.
- The maximum number of stations that can be accommodated is 12. For more stations, please contact SMC.

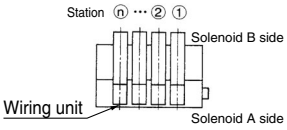

SY3000: SS5Y3-20P-Stations -□-Q

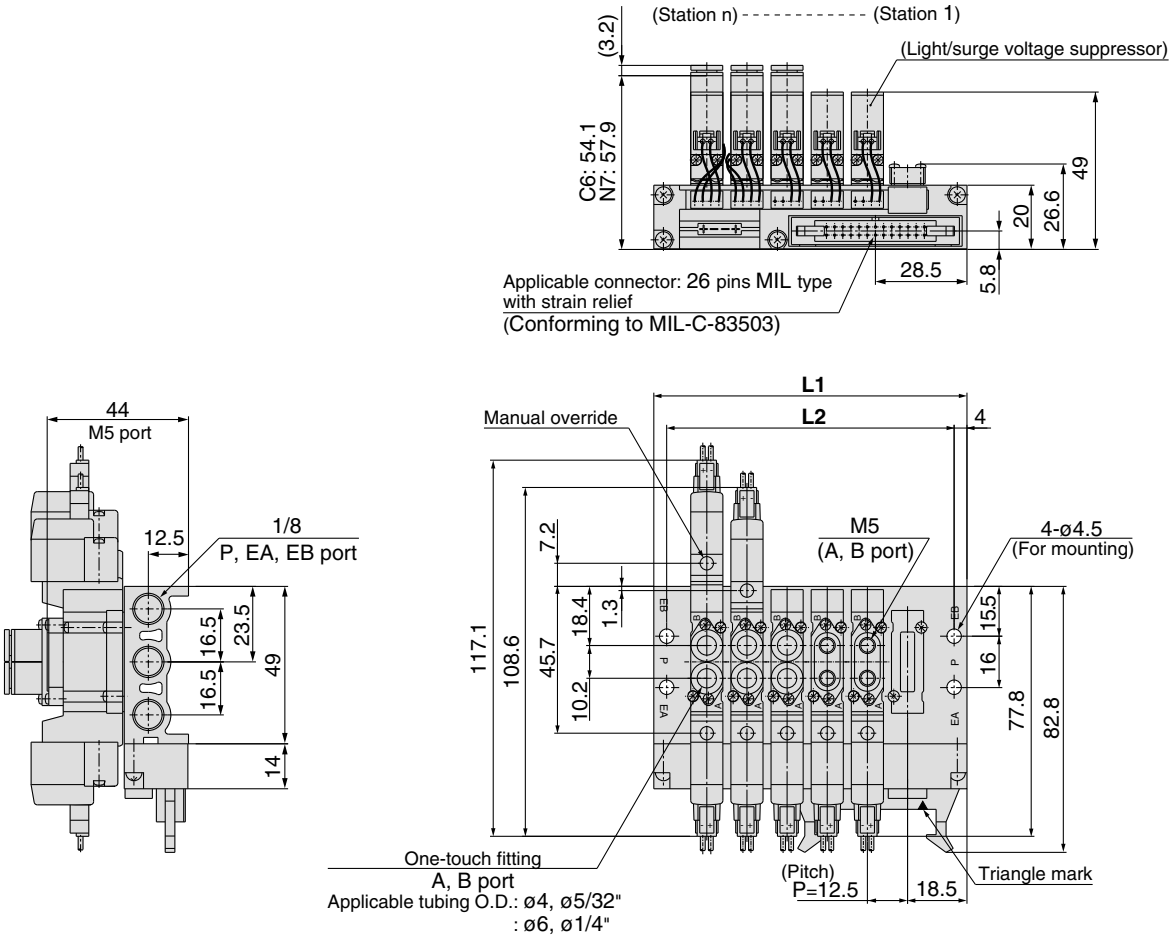

Stations n	4	5	6	7	8	9	10	11	12
L1	72.5	85	97.5	110	122.5	135	147.5	160	172.5
L2	64.5	77	89.5	102	114.5	127	139.5	152	164.5

SY5000: SS5Y5-20P-Stations-□-Q

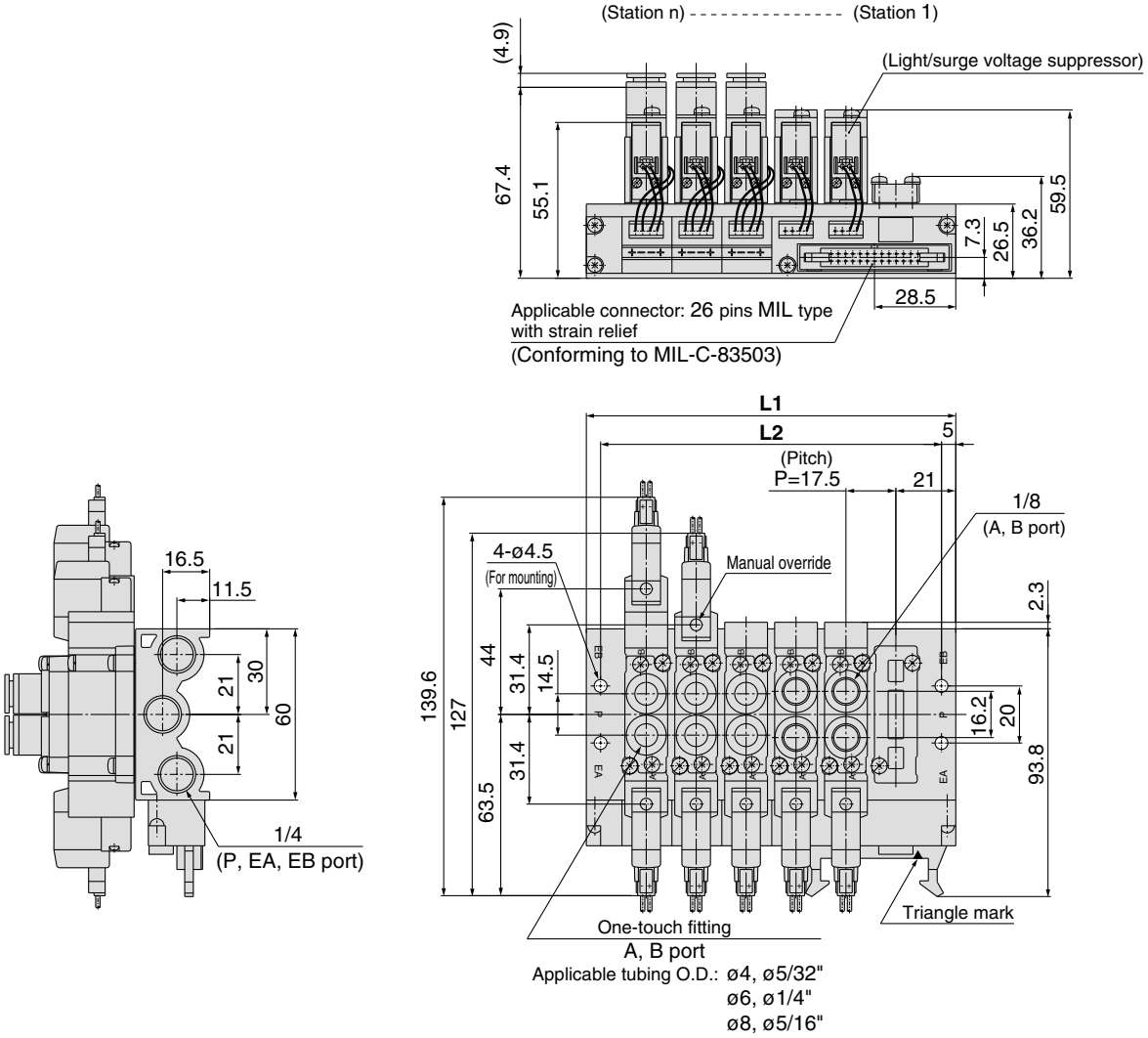

Stations n	3	4	5	6	7	8	9	10	11	12
L1	77	94.5	112	129.5	147	164.5	182	199.5	217	234.5
L2	67	84.5	102	119.5	137	154.5	172	189.5	207	224.5

SY7000: SS5Y7-20P-Stations-□-Q

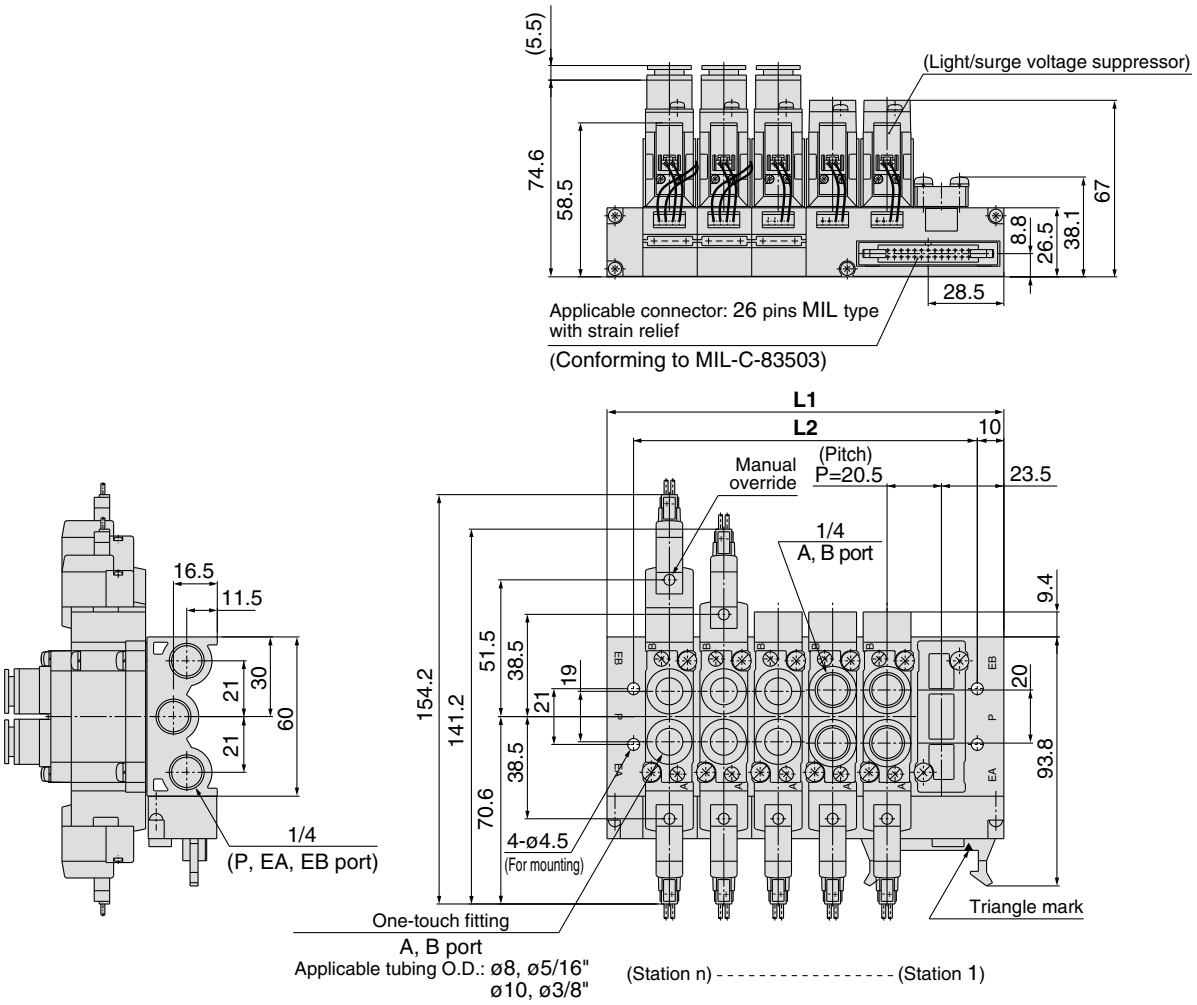

Stations n	3	4	5	6	7	8	9	10	11	12
L1	88	108.5	129	149.5	170	190.5	211	231.5	252	272.5
L2	68	88.5	109	129.5	150	170.5	191	211.5	232	252.5

Type 23P

5 Port Solenoid Valve
Series SY9000
Body Ported
Stacking Type/Flat Ribbon Cable

How to Order Manifold

SS5Y 9 — 23P — 05 — [ ] — [ ] -Q

Manifold series

9	SY9000

Thread type

-	Rc
00F	G
00N	NPT
00T	NPTF

Valve stations

Symbol	Stations
04	4 stations
⋮	⋮
12	12 stations

∗ This also includes the number of blanking plate assemblies.

Option

Symbol	Mounting
-	Direct mounting
D	DIN rail mounting (with DIN rail)
D0	DIN rail mounting (without DIN rail)
D ∗	When a longer DIN rail is desired than the specified stations, specify the station number to be required into ∗ mark.

∗ Type 23P manifold of Series SY9000 is concurrently used for the internal and external pilot.

How to Order Valve Manifold Assembly (Example)

Example

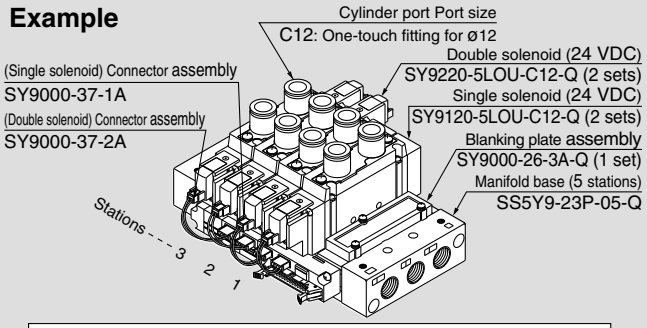

SS5Y9-23P-05-Q	**1 set (Type 23, 5 station manifold base part no.)**
∗ SY9000-26-3A-Q	**1 set (Blanking plate assembly part no.)**
∗ SY9120-5LOU-C12-Q	**2 sets (Single solenoid part no.)**
∗ SY9220-5LOU-C12-Q	**2 sets (Double solenoid part no.)**
∗ SY9000-37-1A	**2 sets (Connector assembly part no.)**
∗ SY9000-37-2A	**2 sets (Connector assembly part no.)**

The asterisk denotes the symbol for assembly.
Prefix it to the part nos. of the solenoid valve, etc.

Add the valve and option part number under the manifold base part number. In the case of complex arrangement, specify them on the manifold specification sheet.

How to Order Valve

For DC: SY 9 [1] 20 [ ] — [5] LO [Z] [ ] — [02] [ ] -Q

Light/surge voltage suppressor

Z	With light/surge voltage suppressor
U	With light/surge voltage suppressor (Non-polar type)

Note) Z: Positive common specifications only.

Rated voltage

5	24 VDC
6	12 VDC

Thread type

-	Rc
F	G
N	NPT
T	NPTF

Series

9	SY9000

Type of actuation

1	2 position single
2	2 position double
3	3 position closed center
4	3 position exhaust center
5	3 position pressure center

Pilot specifications

-	Internal pilot
R	External pilot

∗ Type 23P manifolds can be used for both internal and external pilots.

A, B port size

Thread piping

Symbol	Port size
02	1/4
03	3/8

One-touch fitting (Metric size)

Symbol	Port size
C8	One-touch fitting for ø8
C10	One-touch fitting for ø10
C12	One-touch fitting for ø12

One-touch fitting (Inch size)

Symbol	Port size
N9	One-touch fitting for ø5/16"
N11	One-touch fitting for ø 3/8"

Manual override

-	Non-locking push type
D	Push-turn locking slotted type
E	Push-turn locking lever type

Note) When placing an order for body ported solenoid valve as a single unit, mounting bolt for manifold and gasket are not attached. Order them separately, if necessary. (For details, refer to page 56.)

SMC

- **Multiple valve wiring is simplified through the use of the flat cable connector.**
- **Clean appearance**

In the case of a flat ribbon cable type, each valve is wired on the print board of manifold base to allow the external wiring to be piped all together with 26 pins MIL connector.

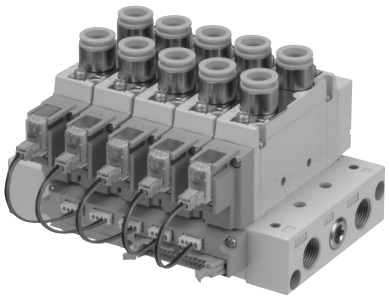

Manifold Specifications

Model		SS5Y9-23P
Applicable valve		SY9□20
Manifold type		Stacking type
P (SUP)/R (EXH)		Common SUP, Common EXH
Valve stations		4 to 12 stations Note1)
A, B port location		Valve
Port size	P, EA, EB port	3/8
	A, B port	1/4 3/8 C8 (One-touch fitting for ø8) C10 (One-touch fitting for ø10) C12 (One-touch fitting for ø12)
Manifold base weight W (g) n: Stations		W = 73n + 259
Applicable flat ribbon cable connector		Flat ribbon cable connector, Socket: 26 pins MIL with strain relief, Conforming to MIL-C-83503
Internal wiring		In common between +COM and –COM (Z type: +COM only)
Rated voltage		12, 24 VDC

Note 1) For more than 10 stations, supply pressure to P port on both sides and exhaust from EA/EB port on both sides.
Note 2) The withstand voltage specification for the wiring unit section is JIS C 0704, Grade 1 or its equivalent.
Note 3) Refer to "Manifold Option" on page 56.

How to Order Connector Assembly

For 12, 24 VDC

Specifications	For SY9000
For single solenoid	SY9000-37-1A
Double solenoid 3 position	SY9000-37-2A
Single with spacer assembly	SY9000-37-3A
Double, 3 position with spacer assembly	SY9000-37-4A

Flow Characteristics

Model	Port size		Flow characteristics							
	1 ,5 ,3 (P ,EA ,EB)	4 ,2 (A ,B)	1 → 4/2 (P → A/B)				4/2 → 5/3 (A/B → EA/EB)			
			C (dm³/(s·bar))	b	Cv	Q[ℓ/min(ANR)]*	C (dm³/(s·bar))	b	Cv	Q[ℓ/min(ANR)]*
SS5Y9-23P	3/8	C12	6.3	0.20	1.5	1509	8.2	0.28	1.9	2059

Note) The value is for manifold base with 5 stations and individually operated 2 position type.
* These values have been calculated according to ISO6358 and represent the flow rate measured in standard conditions at an upstream pressure of 0.6 MPa (relative pressure) and a differential pressure of 0.1MPa.

Internal Wiring of Manifold (Non-polar type)

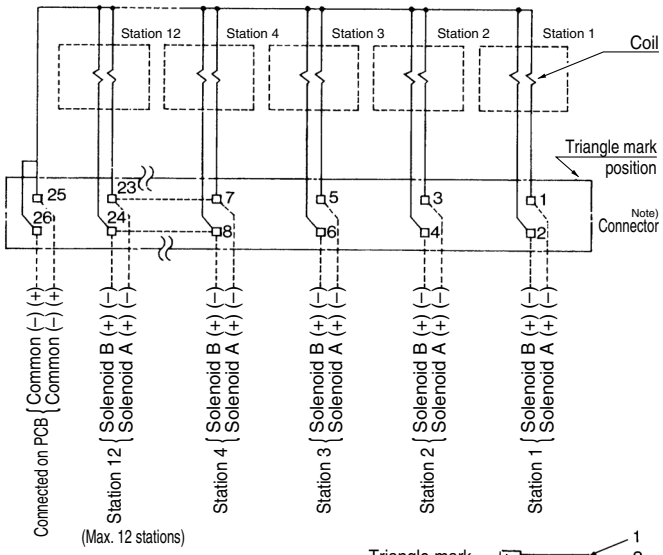

Note)
Terminal no. is not indicated on the connector. The terminal no. indicated in the connection schematic of connector, as shown in the reference, means a correlation of 1, 2, 3····26 from the triangle mark side on the flat ribbon cable of connector.

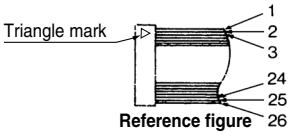

Reference figure

- For more than 10 stations, both poles of the common should be wired.
- For single solenoid, connect to the solenoid A side.
- The maximum number of stations that can be accommodated is 12. For more stations, please contact SMC.

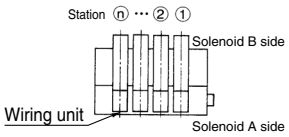

⚠Caution

- For non-polar (U) valves, the electrical DC connections can be used with either positive and negative COM. For type (Z), only use with positive COM as the valve does not operate correctly when used with negative COM.

SY9000: SS5Y9-23P-Stations-□-(D)-Q

Grommet (G)

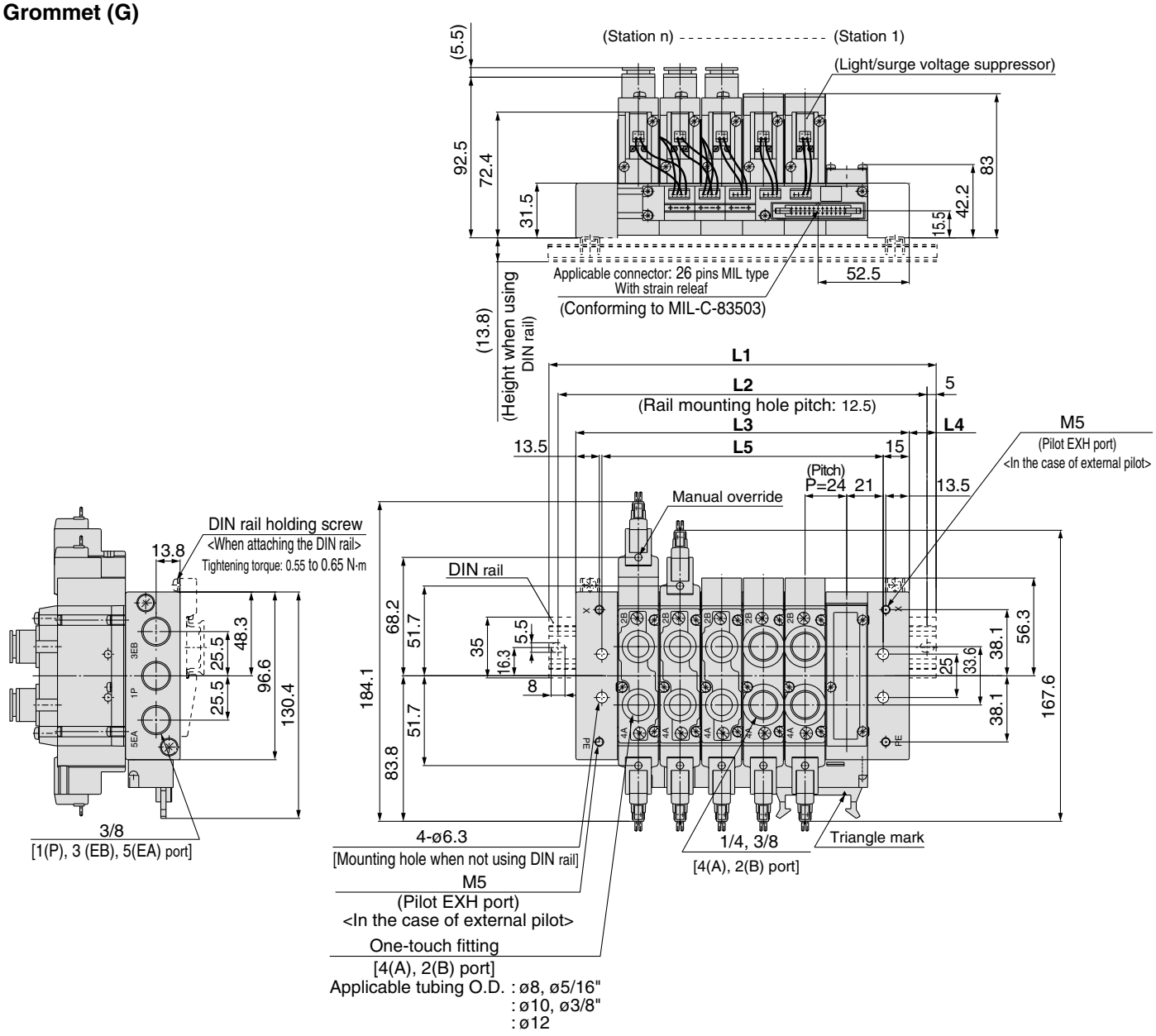

Stations n	4 stations	5	6	7	8	9	10	11	12 stations
L1	173	198	223	248	273	298	323	335.5	360.5
L2	162.5	187.5	212.5	237.5	262.5	287.5	312.5	325	350
L3	144	168	192	216	240	264	288	312	336
L4	14.5	15	15.5	16	16.5	17	17.5	12	12.5
L5	114	138	162	186	210	234	258	282	306

Note) In the case of direct mounting without DIN rail, total width of manifold is L3.

EX510 Gateway-type Serial Transmission System Body Ported Manifold/Integrated Base

Type 20SA Series SY3000/5000/7000

How to Order Manifold

SS5Y 3 – 20SA □ – 04 – □ – Q

Manifold series

3	SY3000
5	SY5000
7	SY7000

SI unit

—	NPN output (+COM.)
N	PNP output (–COM.)

SI unit part no.

Symbol	SI unit specifications	SI unit part no.
—	NPN output (+COM.)	EX510-S001
N	PNP output (–COM.)	EX510-S101

P, R port thread type

—	Rc
00F	G
00N	NPT
00T	NPTF

Valve stations

Symbol	Stations	Note
03	3 stations	Double wiring Note 1)
⋮	⋮	
08	8 stations	
03	3 stations	Specified layout Note 2) (Compatible with 16 solenoid valves)
⋮	⋮	
16	16 stations	

- SS5Y3 can be set from 4 stations.
- The number of the blanking plate assembly is also included.

Note 1) Double wiring: Use of a single solenoid will result in an unused control signal. If this is not desired, order with a specified layout.

Note 2) Specified layout: Indicate wiring specifications on the manifold specification sheet. (Note that double and 3 position valves cannot be used where single solenoid wiring has been specified.)

How to Order Manifold Assembly (Example)

Example

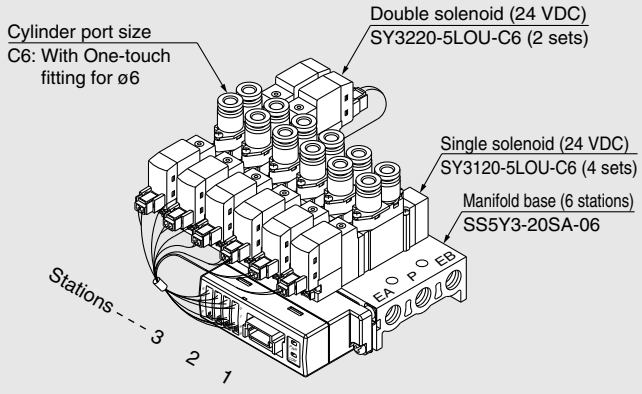

SS5Y3-20SA-06 ····· 1 set (20SA type 6-station manifold part no.)
*** SY3120-5LOU-C6 ··· 4 sets (Single solenoid part no.)**
*** SY3220-5LOU-C6 ··· 2 sets (Double solenoid part no.)**

→The asterisk denotes the symbol for assembly. Prefix to the part no. of the solenoid valve, etc.

Add the valve and option part number under the manifold base part number.
When entry of part numbers becomes complicated, indicate by the manifold specification sheet. For a manifold for an EX510, the length of the lead wire for a connector assembly depends on the number of stations. Therefore, the manifold assembly is shipped with the valves (including blanking plates) and connector assembly mounted on it, as the standard specification. Be sure to specify the part nos. of the solenoid valves to be mounted.

How to Order Valves

SY 3 1 20 □ – 5 LO Z □ – M5 □ – Q

Series

3	SY3000
5	SY5000
7	SY7000

Type of actuation

1	2 position single
2	2 position double
3	3 position closed centre
4	3 position exhaust centre
5	3 position pressure centre

Coil specifications

—	Standard
T	With power saving circuit

Rated voltage: 24 VDC

Light/Surge voltage suppressor

Z	With light/surge voltage suppressor
U	With light/surge voltage suppressor (non-polar type)

Note 1) Power saving circuit is only available in the "Z" type.
Note 2) When the SI unit is the PNP output (-COM.), only the "U" type is available.

Manual override

—	Non-locking push type
D	Push-turn locking slotted type
E	Push-turn locking lever type

Thread type

—	Rc
F	G
N	NPT
T	NPTF

A, B port size
Thread piping

M5	M5 x 0.8	SY3000
01	1/8	SY5000
02	1/4	SY7000

One-touch fitting (Metric size)

C4	One-touch fitting for ø4	SY3000
C6	One-touch fitting for ø6	
C4	One-touch fitting for ø4	SY5000
C6	One-touch fitting for ø6	
C8	One-touch fitting for ø8	
C8	One-touch fitting for ø8	SY7000
C10	One-touch fitting for ø10	

One-touch fitting (Inch size)

N3	One-touch fitting for ø5/32"	SY3000
N7	One-touch fitting for ø1/4"	
N3	One-touch fitting for ø5/32"	SY5000
N7	One-touch fitting for ø1/4"	
N9	One-touch fitting for ø5/16"	
N9	One-touch fitting for ø5/16"	SY7000
N11	One-touch fitting for ø3/8"	

Note) When placing an order for body ported solenoid valve as a single unit, mounting screw for manifold and gasket are not attached. Order them separately, if necessary.

■Gasket assembly part no.

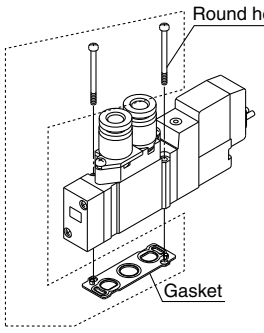

Series	Gasket assembly part no.
SY3000	SY3000-GS-1
SY5000	SY5000-GS-1
SY7000	SY7000-GS-1

Note) The gasket assembly includes 10 sets of mounting screws and a gasket.

SY3000: SS5Y3-20SA □ - Stations - □

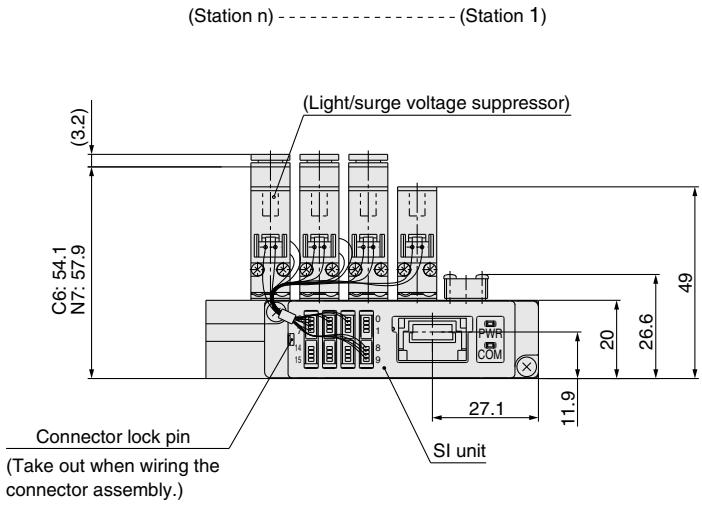

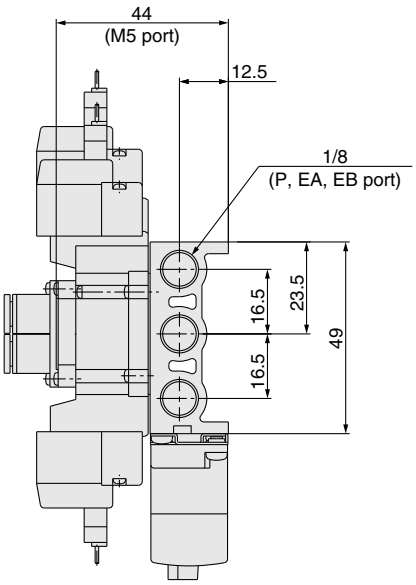

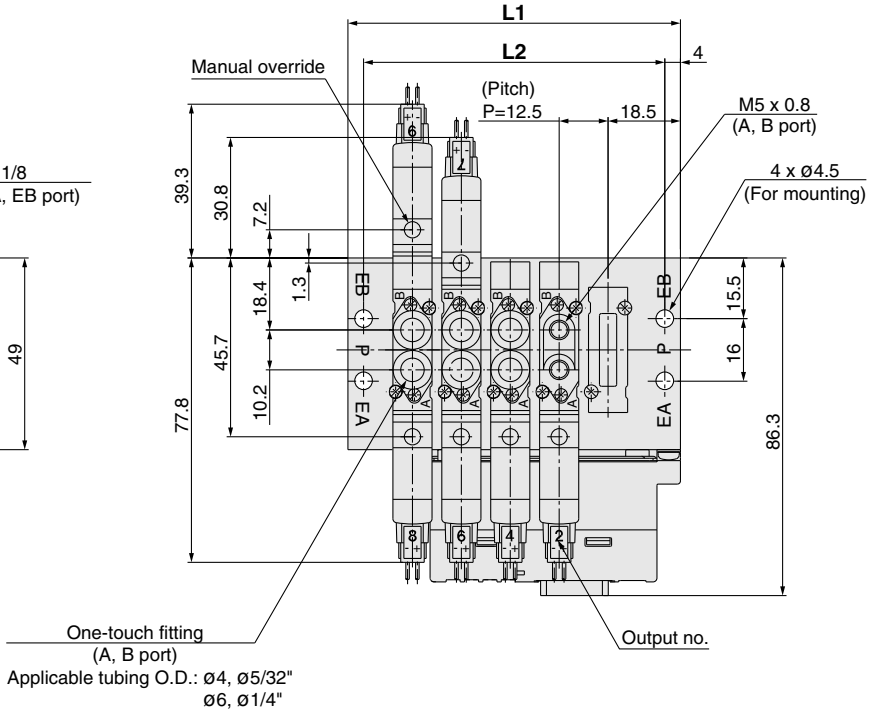

Stations n	4 stations	5	6	7	8	9	10	11	12	13	14	15	16 stations
L1	72.5	85	97.5	110	122.5	135	147.5	160	172.5	185	197.5	210	222.5
L2	64.5	77	89.5	102	114.5	127	139.5	152	164.5	177	189.5	202	214.5

SY5000: SS5Y5-20SA □ - Stations - □

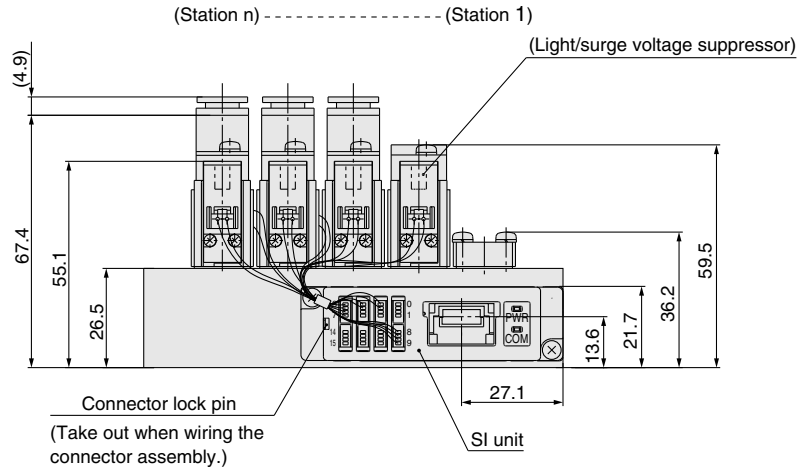

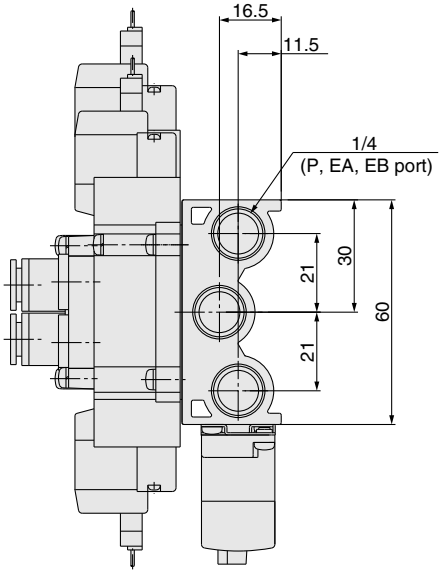

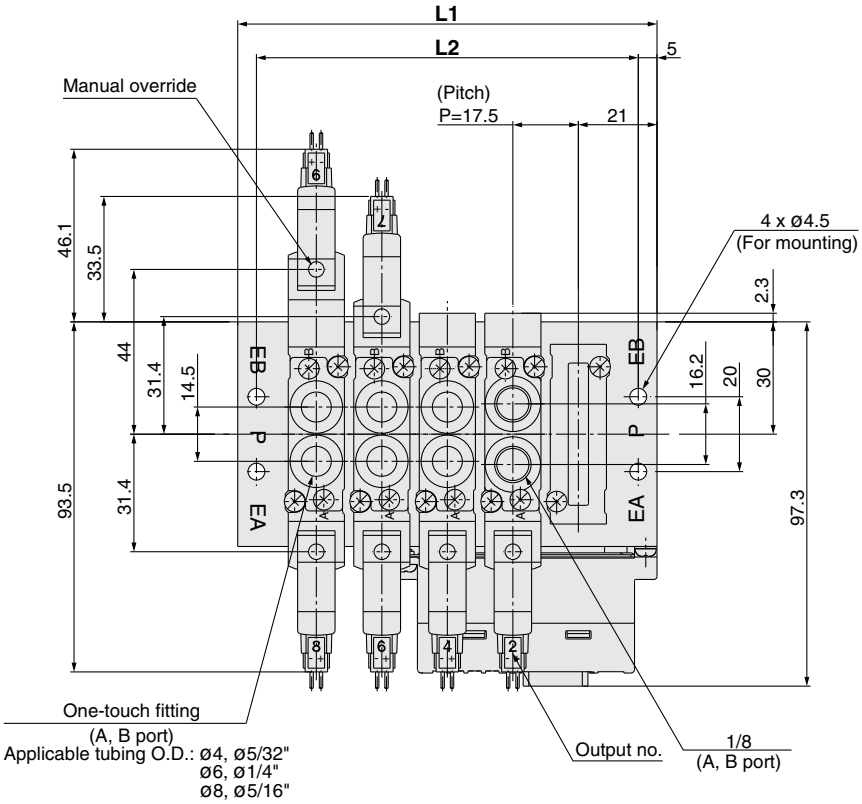

Stations n	3 stations	4	5	6	7	8	9	10	11	12	13	14	15	16 stations
L1	77	94.5	112	129.5	147	164.5	182	199.5	217	234.5	252	269.5	287	304.5
L2	67	84.5	102	119.5	137	154.5	172	189.5	207	224.5	242	259.5	277	294.5

SY7000: SS5Y7-20SA □ - Stations - □

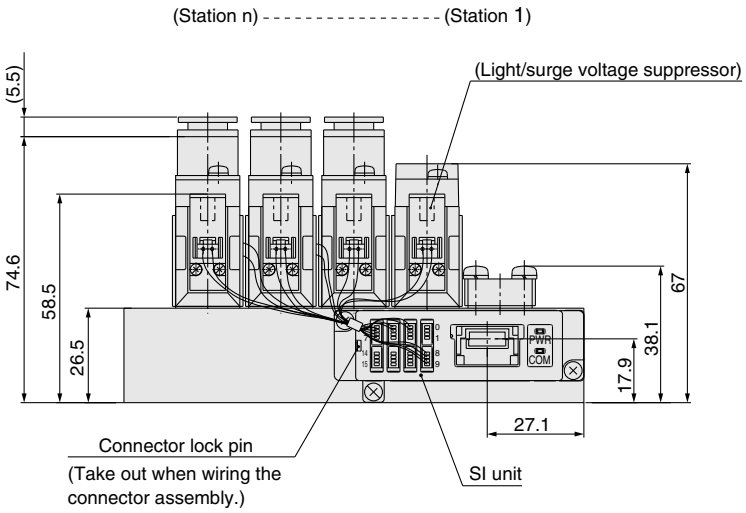

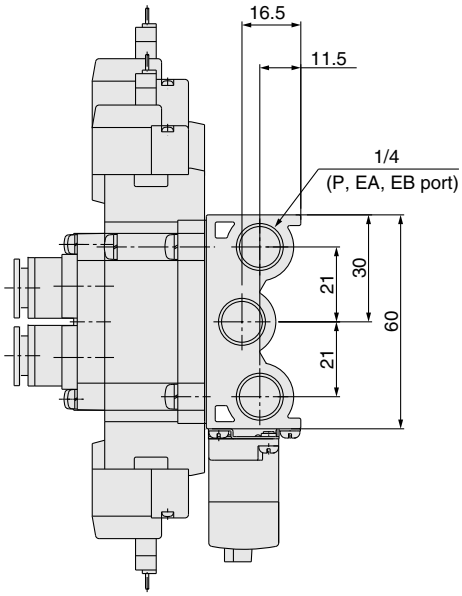

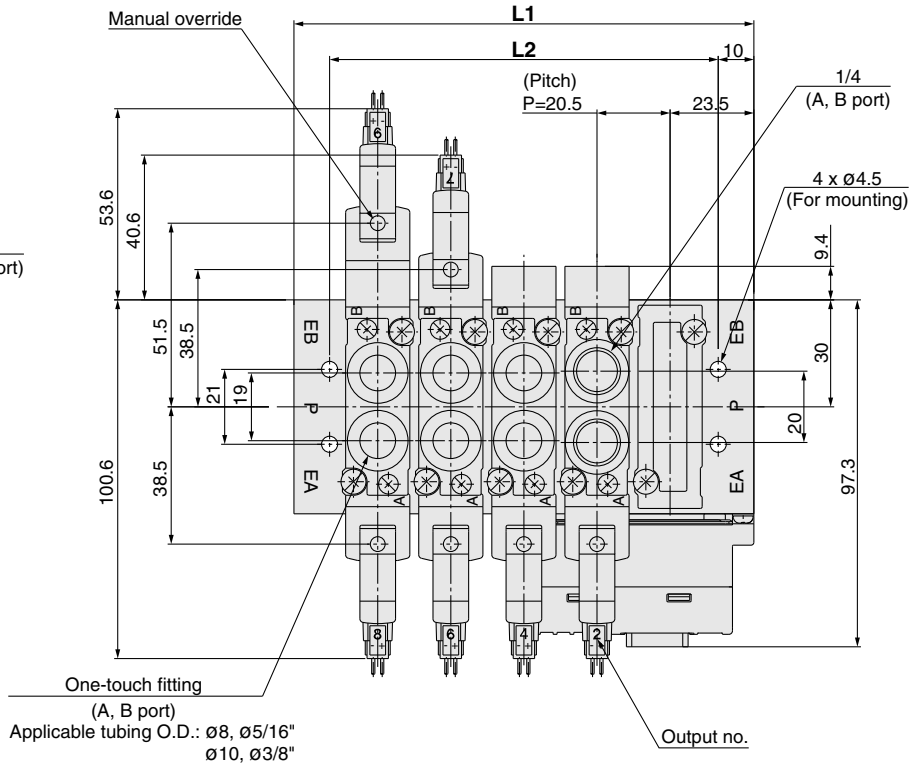

Stations n	3 stations	4	5	6	7	8	9	10	11	12	13	14	15	16 stations
L1	88	108.5	129	149.5	170	190.5	211	231.5	252	272.5	293	313.5	334	354.5
L2	68	88.5	109	129.5	150	170.5	191	211.5	232	252.5	273	293.5	314	334.5

EX510 Gateway-type Serial Transmission System Body Ported Manifold/Stacking Type

Type 23SA

Series SY9000

How to Order Manifold

SS5Y9-23SA□-03-□-□-Q

SI unit

—	NPN output (+COM.)
N	PNP output (–COM.)

Valve stations

Symbol	Stations	Note
03	3 stations	Double wiring Note 1)
⋮	⋮	
08	8 stations	
03	3 stations	Specified layout Note 2) (Compatible with 16 solenoid valves)
⋮	⋮	
16	16 stations	

• The number of the blanking plate assembly is also included.

Note 1) Double wiring: Use of a single solenoid will result in an unused control signal. If this is not desired, order with a specified layout.

Note 2) Specified layout: Indicate wiring specifications on the manifold specification sheet. (Note that double and 3 position valves cannot be used where single solenoid wiring has been specified.)

Option

—	Direct mounting
D	DIN rail mounting (With DIN rail)
DO	DIN rail mounting (Without DIN rail)
D*	When a longer DIN rail is desired than the specified stations, specify the station number to be required into * mark.

P, R port thread type

—	Rc
00F	G
00N	NPT
00T	NPTF

SI unit part no.

Symbol	SI unit specifications	SI unit part no.
—	NPN output (+COM.)	EX510-S001
N	PNP output (–COM.)	EX510-S101

How to Order Manifold Assembly (Example)

Example

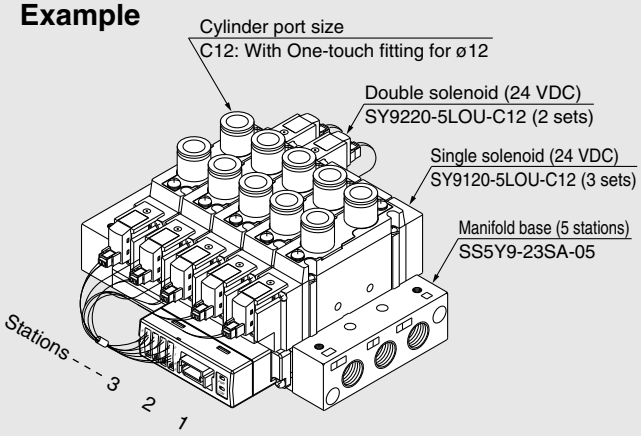

SS5Y9-23SA-05 ····· 1 set (23SA type 5-station manifold part no.)
*** SY9120-5LOU-C12 ··· 3 sets (Single solenoid part no.)**
*** SY9220-5LOU-C12 ··· 2 sets (Double solenoid part no.)**

→The asterisk denotes the symbol for assembly. Prefix to the part no. of the solenoid valve, etc.

Add the valve and option part number under the manifold base part number.
When entry of part numbers becomes complicated, indicate by the manifold specification sheet. For a manifold for an EX510, the length of the lead wire for a connector assembly depends on the number of stations. Therefore, the manifold assembly is shipped with the valves (including blanking plates) and connector assembly mounted on it, as the standard specification. Be sure to specify the part nos. of the solenoid valves to be mounted.

How to Order Valves

SY9 1 20 □ □ – 5 LO Z □ – 02 □ – Q

Type of actuation

1	2 position single
2	2 position double
3	3 position closed centre
4	3 position exhaust centre
5	3 position pressure centre

Pilot type

—	Internal pilot
R	External pilot

Coil specifications

—	Standard
T	With power saving circuit

Rated voltage: 24 VDC

Light/Surge voltage suppressor

Z	With light/surge voltage suppressor
U	With light/surge voltage suppressor (non-polar type)

Note 1) Power saving circuit is only available in the "Z" type.
Note 2) When the SI unit is the PNP output (-COM.), only the "U" type is available.

Manual override

—	Non-locking push type
D	Push-turn locking slotted type
E	Push-turn locking lever type

Thread type

—	Rc
F	G
N	NPT
T	NPTF

A, B port size
Thread piping

02	1/4
03	3/8

One-touch fitting (Metric size)

C8	One-touch fitting for ø8
C10	One-touch fitting for ø10
C12	One-touch fitting for ø12

One-touch fitting (Inch size)

N9	One-touch fitting for ø5/16"
N11	One-touch fitting for ø3/8"

Note) When placing an order for body ported solenoid valve as a single unit, mounting screw for manifold and gasket are not attached. Order them separately, if necessary.

■Gasket assembly part no.

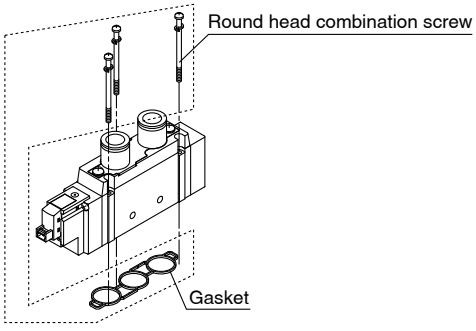

Series	Gasket assembly part no.
SY9000	SY9000-GS-1

Note) The gasket assembly includes 10 sets of mounting screws and a gasket.

SY9000: SS5Y9-23SA □ - Stations - □ (-D)

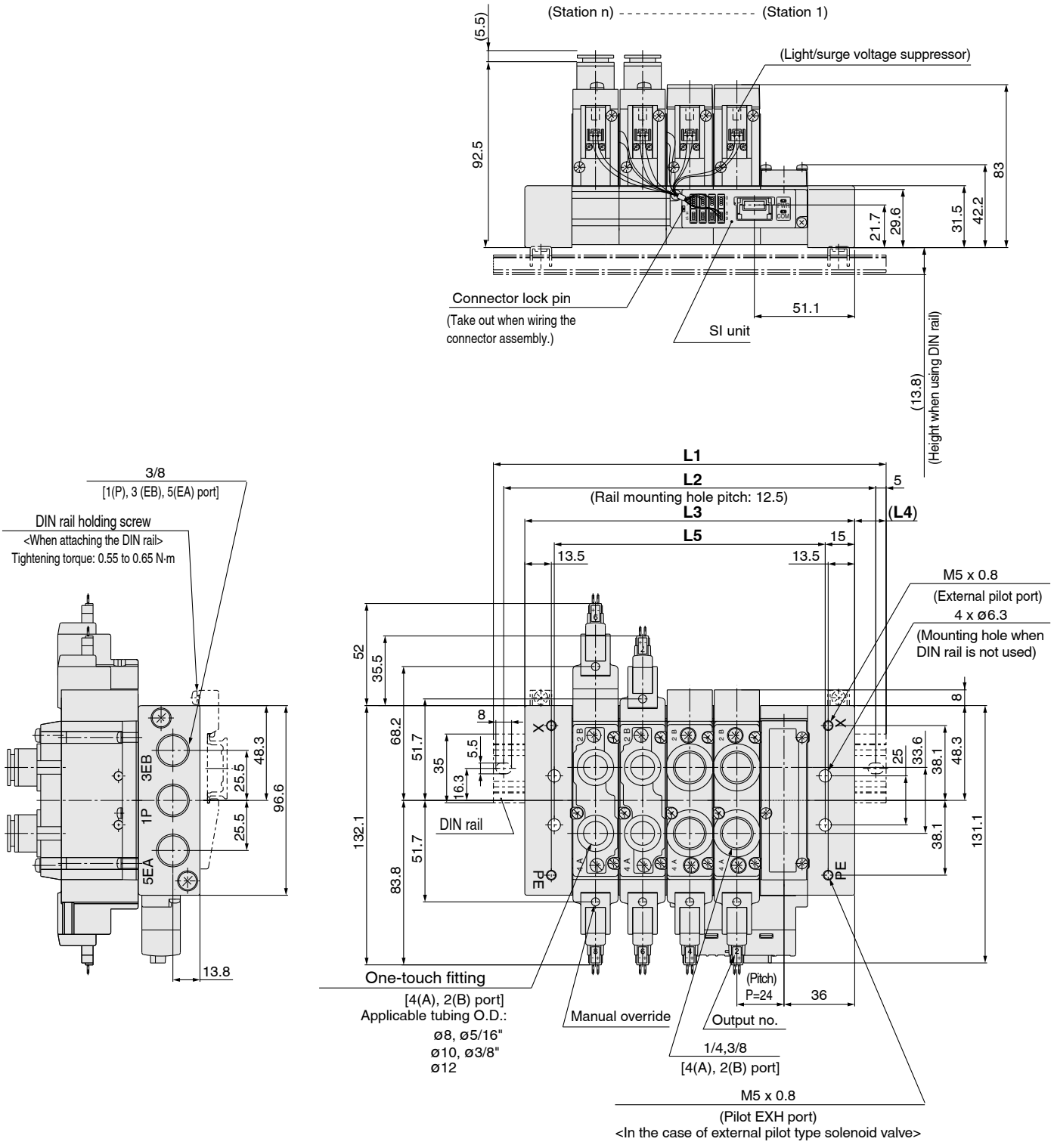

Stations n	3 Stations	4	5	6	7	8	9	10	11	12	13	14	15	16 Stations
L1	148	173	198	223	248	273	298	323	335.5	360.5	385.5	410.5	435.5	460.5
L2	137.5	162.5	187.5	212.5	237.5	262.5	287.5	312.5	325	350	375	400	425	450
L3	120	144	168	192	216	240	264	288	312	336	360	384	408	432
L4	14	14.5	15	15.5	16	16.5	17	17.5	12	12.5	13	13.5	14	14.5
L5	90	114	138	162	186	210	234	258	282	306	330	354	378	402

Note) In the case of direct mounting without DIN rail, total width of manifold is L3.

Manifold Option

■ Type 20, 23 Blanking plate assembly

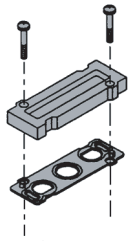

Series	Assembly part no.
SY3000	SY3000-26-19A-Q
SY5000	SY5000-26-1A-Q
SY7000	SY7000-26-1A-Q
SY9000	SY9000-26-1A-Q

■ Type 20P, 23P Blanking plate assembly

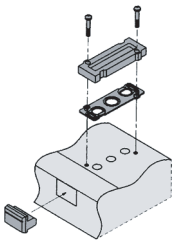

Series	Assembly part no.
SY3000	SY3000-26-20A-Q
SY5000	SY5000-26-3A-Q
SY7000	SY7000-26-3A-Q
SY9000	SY9000-26-3A

■ Gasket assembly part no.

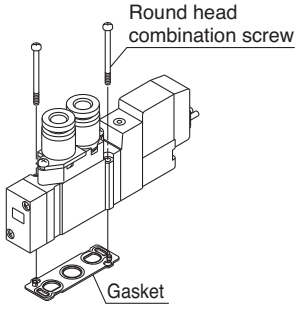

Series	Gasket assembly
SY3000	SY3000-GS-1
SY5000	SY5000-GS-1
SY7000	SY7000-GS-1
SY9000	SY9000-GS-1

Note) Gasket assembly consists of mounting screws and a gasket. (10 gasket units + screws)

■ Individual SUP spacer assembly

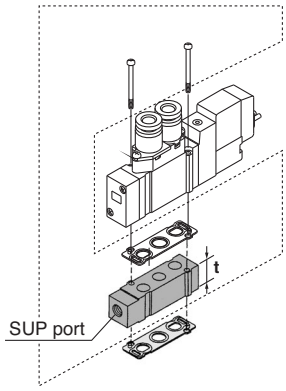

Series	Assembly part no.	Port size	t
SY3000	SY3000-38-20A-Q	M5	10.5
SY5000	SY5000-38-1∗A-Q	1/8	15
SY7000	SY7000-38-1∗A-Q	1/4	18
SY9000	SY9000-38-1∗A-Q	1/4	20

Note) • The SUP port of SY3000/5000/7000 may be either on the lead wire side or on the end plate side. However, as the CE-compliant products (-Q) must be mounted in the specified direction, the port directions cannot be changed. (An assembly is shipped under the conditions shown in the figure.)
• For the SY9000, it can only be used on the end plate side.

■ Individual EXH spacer assembly

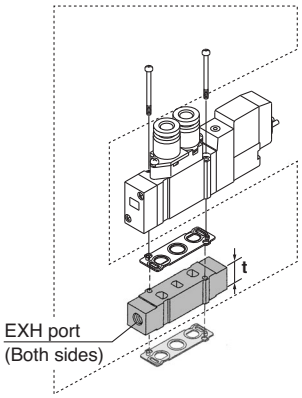

Series	Assembly part no.	Port size	t
SY3000	SY3000-39-20A-Q	M5	10.5
SY5000	SY5000-39-1∗A-Q	1/8	15
SY7000	SY7000-39-1∗A-Q	1/4	18
SY9000	SY9000-39-1∗A-Q	1/4	20

Note) In case of 20P and 23P, for protection of the wiring unit section from drainage, piping at the EA port should be arranged so that it will not be directly exposed to exhaust from the valve.

■ Individual SUP spacer assembly + Individual EXH spacer assembly (Double spacer)

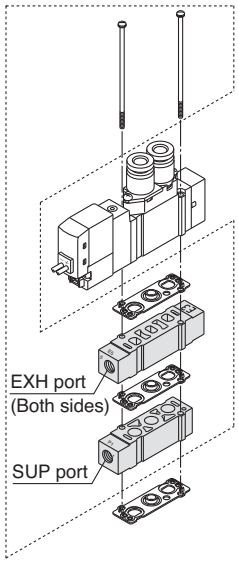

[●: Available ×: Not available]

Series	Individual SUP + Individual EXP Assemble part no.	Port size	Applicable manifold types	
			20	20P
SY3000	SY3000-120-1A-Q	M5	●	×
SY5000	SY5000-75-2∗A-Q	1/8	●	×
SY7000	SY7000-73-3∗A-Q	1/4	●	×

Note) The SUP spacer's port does not have an orientation. However, as the CE-compliant products (-Q) must be mounted in the specified direction, the port directions cannot be changed. As for the EXH ports, adjust the symbol "5" to the pilot valve side. Also, please make sure to connect the individual ports to protect the wiring section of the pilot valve from drainage, etc.
The individual SUP spacer and EXH spacer can be mounted either on the upper side or lower side. (The above illustration shows the condition when the product is shipped out from a factory.)

⚠ Caution

Mounting screw tightening torques

M2: 0.16 N·m
M3: 0.8 N·m
M4: 1.4 N·m

∗ Thread type

-	Rc
F	G
N	NPT
T	NPTF

⚠Warning

When mounting a valve or spacer on the manifold base or sub-plate, etc., those mounting directions are determined. If mounted in the wrong direction, the equipment to be connected may cause malfunction. Refer to external dimensions, and then mount it.

Manifold Option

■ **Connector assembly**

For single solenoid (SY3000-37-81A-□-N)

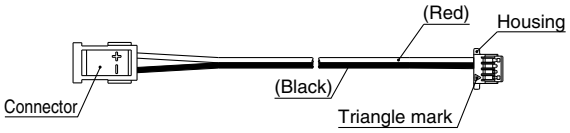

For double solenoid (SY3000-37-81A-□-□)

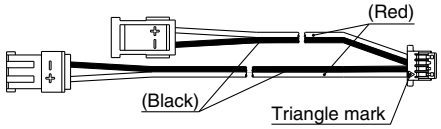

Connector assembly order no. (Can be used for the manifold without a specified layout (8 stations or less))
Integrated type

Model	Part no.	Connector mounting position
SS5Y3-20SA	SY3000-37-81A-3-N	Single : For 1 to 4 stations
	SY3000-37-81A-3-6	Double/3 position: For 1 to 4 stations
	SY3000-37-81A-2-N	Single : For 5 to 8 stations
	SY3000-37-81A-2-4	Double/3 position: For 5 to 8 stations
SS5Y5-20SA	SY3000-37-81A-3-N	Single : For 1 to 8 stations
	SY3000-37-81A-3-6	Double/3 position: For 1 to 8 stations
SS5Y7-20SA	SY3000-37-81A-3-N	Single : For 1 to 4 stations
	SY3000-37-81A-3-6	Double/3 position: For 1 to 4 stations
	SY3000-37-81A-4-N	Single : For 5 to 8 stations
	SY3000-37-81A-4-7	Double/3 position: For 5 to 8 stations

Note) The above is for the station addition or maintenance. When ordering a connector assembly separately, a number would not be printed on the connector.

■ **Connector assembly**
SY3000-37-80A-□

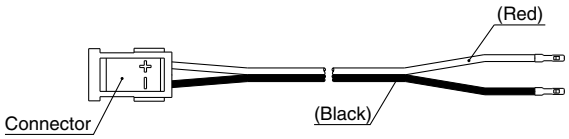

■ **Housing (8 pcs./set)**
SY3000-44-3A

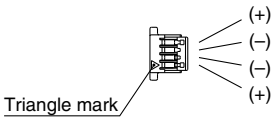

Connector assembly order no. (Can be used for the manifold with a specified layout)

Model	Part no.	Connector mounting position	
SS5Y3-20SA	SY3000-37-80A-3	For A side	For 1 to 8 stations
	SY3000-37-80A-6	For B side	
	SY3000-37-80A-4	For A side	For 9 to 16 stations
	SY3000-37-80A-7	For B side	
SS5Y5-20SA	SY3000-37-80A-3	For A side	For 1 to 8 stations
	SY3000-37-80A-6	For B side	
	SY3000-37-80A-7	For A side	For 9 to 16 stations
	SY3000-37-80A-9	For B side	
SS5Y7-20SA	SY3000-37-80A-4	For A side	For 1 to 8 stations
	SY3000-37-80A-7	For B side	
	SY3000-37-80A-8	For A side	For 9 to 16 stations
	SY3000-37-80A-11	For B side	
SS5Y9-23SA	SY3000-37-80A-6	For A side	For 1 to 8 stations
	SY3000-37-80A-11	For B side	
	SY3000-37-80A-9	For A side	For 9 to 12 stations
	SY3000-37-80A-14	For B side	
	SY3000-37-80A-13	For A side	For 13 to 16 stations
	SY3000-37-80A-18	For B side	

Note 1) The above is for station addition or maintenance. When ordering a connector assembly separately, a number will not be printed on the connector.
Note 2) After inserting the connector assembly into the housing, be sure to confirm that the lead wire will not come off by lightly pulling the wire. Furthermore, do not reuse the lead wire after it has been inserted and removed.
Note 3) Wiring is set longer than the actual wiring distance.

Manifold Option

▪ SUP blocking disk (For SY9000)

By installing a SUP blocking disk in the pressure supply passage of a manifold valve, it is possible to supply two or more different high and low pressures to one manifold.



Series	No.
SY9000	SY9000-61-2A

▪ EXH blocking disk (For SY9000)

By installing an EXH blocking disk in the exhaust passage of a manifold valve, it is possible to divide the valve's exhaust so that it does not affect another valve. (Two blocking disks are needed to divide both exhausts.)



Series	No.
SY9000	SY9000-61-2A

▪ Label for blocking disk (For SY9000)

The labels shown below are used on manifold stations containing SUP/EXH blocking disk(s) to show their location. (3 pcs. each)

VZ3000-123-1A

Label for SUP block disk **Label for EXH block disk** **Label for SUP/EXH block disk**

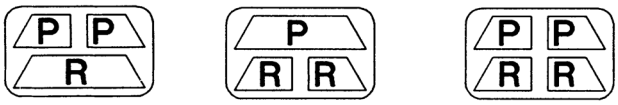

∗ When a block disk is concurrently ordered by specifying on the manifold specification sheet, etc., a label will be stuck on the position where block disk is mounted.

▪ DIN Rail Dimensions/Weight for SY9000

VZ1000 – 11 – 4 – □

● **Refer to L dimensions**

∗ Fill in □ with an appropriate no. listed on the table of DIN rail dimensions shown below.

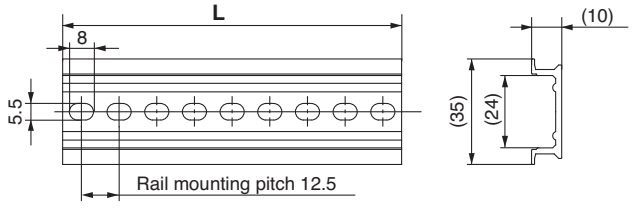

No.	0	1	2	3	4	5	6	7	8	9
L Dimension	98	110.5	123	135.5	148	160.5	173	185.5	198	210.5
Weight (g)	24.8	28	31.1	34.3	37.4	40.6	43.8	46.9	50.1	53.3
No.	10	11	12	13	14	15	16	17	18	19
L Dimension	223	235.5	248	260.5	273	285.5	298	310.5	323	335.5
Weight (g)	56.4	59.6	62.7	65.9	69.1	72.2	75.4	78.6	81.7	84.9
No.	20	21	22	23	24	25	26	27	28	29
L Dimension	348	360.5	373	385.5	398	410.5	423	435.5	448	460.5
Weight (g)	88	91.2	94.4	97.5	100.7	103.9	107	110.2	113.3	116.5
No.	30	31	32	33	34	35	36	37	38	
L Dimension	473	485.5	498	510.5	523	535.5	548	560.5	573	
Weight (g)	119.7	122.8	126	129.2	132.3	135.5	138.6	141.8	145	

Note) · For DIN rail, refer to page 229.
· Refer to L1 dimension on page 55 for lengths that correspond to the number of manifold stations.

▪ Cable assembly (For 20P, 23P)

AXT100-FC26- 1 2 3

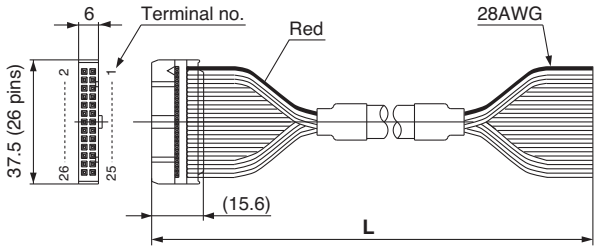

Flat ribbon cable connector

Cable length (**L**)	Assembly part no.
	26 pins
1.5 m	AXT100-FC26-1
3 m	AXT100-FC26-2
5 m	AXT100-FC26-3

∗ When using a standard commercial connector, use a 26-pin type connector conforming to MIL-C-83503 with strain relief.
∗ Cannot be used for movable wiring
∗ Lengths other than the above are also available. Please contact SMC for details.

Connector Manufacturers' Example

- HIROSE ELECTRIC CO., LTD.
- 3M Japan Limited
- Fujitsu Limited
- Japan Aviation Electronics Industry, Limited
- J.S.T. Mfg. Co., Ltd.
- Oki Electric Cable Co., Ltd.

■ Plug

These are inserted in unused cylinder ports and SUP, EXH ports.
Note) Purchasing order is available in units of 10 pieces.

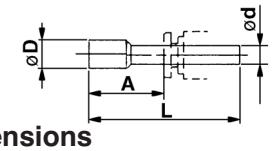

Dimensions

Applicable fittings size **ød**	Model	**A**	**L**	**D**
4	**KQ2P-04**	16	32	6
6	**KQ2P-06**	18	35	8
8	**KQ2P-08**	20.5	39	10
10	**KQ2P-10**	22	43	12
12	**KQ2P-12**	24	44.5	14
1/8"	**KQ2P-01**	16	31.5	5
5/32"	**KQ2P-03**	16	32	6
1/4"	**KQ2P-07**	18	35	8.5
5/16"	**KQ2P-09**	20.5	39	10
3/8"	**KQ2P-11**	22	43	11.5

How to Increase Manifold Bases (Series SY9000 only) Manifold case can be added at any location.

When a type 23 manifold base is added, tension bolts as well as manifold block assembly will be required. Order the tension bolt suitable for the stations after a station was increased (decreased), since the length of a tension bolt differs by the number of stations. (For changing the number of stations for a type 23P manifold, wiring unit for the stations and lead assembly will be required.)

1. Loosen the tension bolts ⑤ connecting the manifold base, and pull out both of 2 tension bolts.
   (When equipped with a DIN rail, loosen one DIN rail holding screw on either U side or D side.)
2. Separate the blocks at the location where station expansion is desired.
3. Mount additional manifold block assembly.
4. Press block-to-block so that there's no gap. After connection, insert a tension bold for desired stations and then tighten it.

⚠ **Caution** (Tightening torque: 2.9 N·m)
(When equipped with a DIN rail, be sure to tighten the DIN rail holding screws after tightening the tension bolts. Tightening torque: 1.4 N·m)

⚠ Caution

1. Be sure to shut off the power and air supplies before disassembly. Furthermore, since air may remain inside the actuator, piping and manifold, confirm that the air is completely exhausted before performing any work.
2. When disassembly and assembly are performed, air leakage may result if connections between blocks and tightening of the end block's holding screw, is inadequate.
3. By adding wiring unit assembly to type 23 manifold, it can be changed to type 23P manifold, too.

Body Ported Manifold Exploded View, 23/23P Common

As for body ported manifold, it is available only for Series SY9000 to disassemble or increase the manifold.

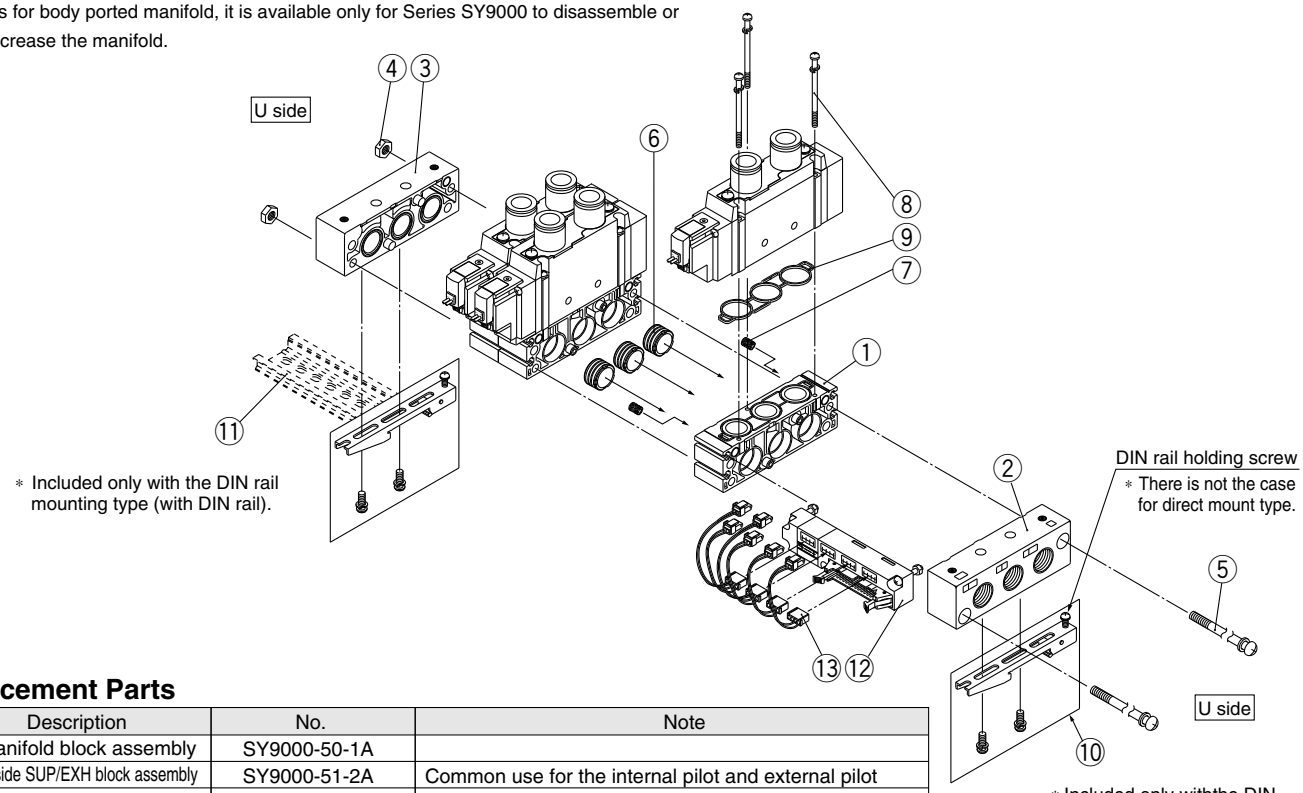

Replacement Parts

No.	Description	No.	Note
1	Manifold block assembly	SY9000-50-1A	
2	D side SUP/EXH block assembly	SY9000-51-2A	Common use for the internal pilot and external pilot
3	U side SUP/EXH block	SY9000-51-4	Common use for the internal pilot and external pilot
4	Hexagon nut	SY9000-25-1	M5 x 0.8
5	Tension bolt	SY9000-23-□	Since □ at the end of part number corresponds with the number of stations, fill in the same number as the number of stations.
6	SUP Block bush assembly	SY9000-61-1A	Included in the Manifold block assembly and the D side SUP/EXH block assembly.
7	SUP Block bush assembly	SY9000-61-3A	Included in the Manifold block assembly and the D side SUP/EXH block assembly.
8	Round head combination screw	SY9000-18-2	Included in the Manifold block assembly.
9	Manifold gasket	SY9000-11-1	Included in the Manifold block assembly.
10	Clamp sub assembly	SY9000-29-1A	
11	DIN rail	VZ1000-11-4-□	Refer to p. 57.
12	Wiring unit assembly	SY9000-36-□A	Since □ in part number corresponds with the number of stations, fill in the number of stations (4 to 12).
13	Connector assembly	SY9000-37-□□	Refer to page 54.

Type 60

5 Port Solenoid Valve
Series SY3000/5000/7000
Body Ported
Cassette Type

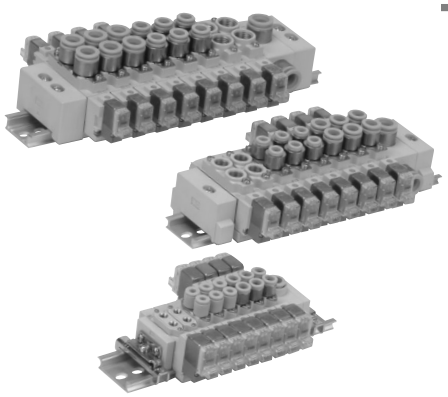

How to Order

SS5Y [3] — 60 — [05] [D] — [ ] **-Q**

Series

3	SY3000
5	SY5000
7	SY7000

Valve stations

02	2 stations
⋮	⋮
20	20 stations

Option
When a DIN rail longer than standard is required, enter the number of manifold stations that corresponds with the length of DIN rail needed. Max. 20 stations

SUP/EXH block assembly mounting position

Symbol	Mounting position	Applicable stations
U	U side	2 to 10 stations
D	D side	
B	Both sides	2 to 20 stations
M*	Special location	

* For special specifications, indicate separately by the manifold specification sheet.

How to Order Valve Manifold Assembly (Example)

Example

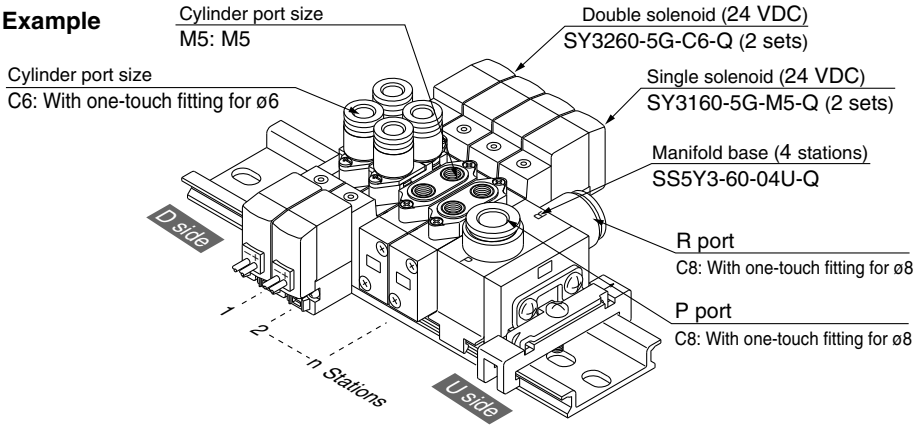

SS5Y3-60-04U-Q — **1 set (Type 60, 4 station manifold base part no.)**
* **SY3260-5G-C6-Q** — **2 sets (Double solenoid part no.)**
* **SY3160-5G-M5-Q** — **2 sets (Single solenoid part no.)**

→ The asterisk denotes the symbol for assembly. Prefix it to the part nos. of the solenoid valve, etc.

Add the valve and option part number under the manifold base part number. In the case of complex arrangement, specify them on the manifold specification sheet.

Manifold Specifications

Model		SS5Y3-60	SS5Y5-60	SS5Y7-60
Applicable valve		SY3□60	SY5□60	SY7□60
Manifold type		Stacking type/DIN rail mounted		
P (SUP)/R (EXH)		Common SUP/Common EXH		
Valve stations		2 to 20 stations Note 1)		
A, B port location		Valve		
Port size	P, R port	C8 (One-touch fitting for ø8)	C10 (One-touch fitting for ø10)	C12 (One-touch fitting for ø12)
	A, B port	M5 C4(One-touch fitting for ø4) C6 (One-touch fitting for ø6)	1/8 C4 (One-touch fitting for ø4) C6 (One-touch fitting for ø6) C8 (One-touch fitting for ø8)	1/4 C8 (One-touch fitting for ø8) C10 (One-touch fitting for ø10)
Manifold base weight W (g) Note 2) (n: Number of SUP/EXH blocks, m: Weight of DIN rail)		W = 13n + m + 36	W = 41.2n + m + 77.6	W = 65.4n + m + 128.2

Note 1) In cases such as those where many valves are operated simultaneously, use "-[station]B (SUP/EXH block on both sides)" (both sides SUP/EXH), applying pressure to the P ports on both sides and exhausting from the R ports on both sides.

Note 2) For DIN rail weight, refer to page 67.

Flow Characteristics

Model	Port size		Flow characteristics							
	1,5/3 (P,R)	4,2 (A,B)	1 → 4/2(P → A/B)				4/2 → 5/3(A/B → R)			
			C (dm^3/(s·bar))	b	Cv	Q[ℓ/min(ANR)]*	C (dm^3/(s·bar))	b	Cv	Q[ℓ/min(ANR)]*
SS5Y3-60	C8	M5	0.55	0.29	0.14	139	0.72	0.24	0.18	176
		C4	0.57	0.24	0.14	140	0.71	0.20	0.17	170
		C6	0.68	0.28	0.17	171	0.77	0.24	0.19	189
SS5Y5-60	C10	1/8	1.8	0.24	0.44	441	2.1	0.17	0.47	495
		C6	1.5	0.30	0.37	381	2.0	0.16	0.46	469
		C8	1.8	0.20	0.45	431	2.2	0.17	0.50	518
SS5Y7-60	C12	1/4	3.7	0.25	0.96	912	3.8	0.19	0.94	905
		C8	3.2	0.26	0.81	794	4.0	0.18	0.96	947
		C10	3.7	0.28	0.98	929	4.1	0.19	1.0	977

Note) The value is for manifold base with 5 stations and individually operated 2 position type.

* These values have been calculated according to ISO6358 and represent the flow rate measured in standard conditions at an upstream pressure of 0.6 MPa (relative pressure) and a differential pressure of 0.1MPa.

How to Order Valve

SY 3 1 60 □ — 5 L □ □ — C6 □ □ -Q

Made to Order

—	—
X20	Body ported external pilot
X90	Main valve fluororubber

Series

3	SY3000
5	SY5000
7	SY7000

Type of actuation

1	2 position single
2	2 position double
3	3 position closed center
4	3 position exhaust center
5	3 position pressure center

A, B port size

Thread piping

Symbol	Port size	Applicable series
M5	M5	SY3000
01	1/8	SY5000
02	1/4	SY7000

Thread type

-	Rc
F	G
N	NPT
T	NPTF

One-touch fitting (Metric size)

Symbol	Port size	Applicable series
C4	One-touch fitting for ø4	SY3000
C6	One-touch fitting for ø6	
C4	One-touch fitting for ø4	SY5000
C6	One-touch fitting for ø6	
C8	One-touch fitting for ø8	
C8	One-touch fitting for ø8	SY7000
C10	One-touch fitting for ø10	

One-touch fitting (Inch size)

Symbol	Port size	Applicable series
N3	One-touch fitting for ø5/32"	SY3000
N7	One-touch fitting for ø1/4"	
N3	One-touch fitting for ø5/32"	SY5000
N7	One-touch fitting for ø1/4"	
N9	One-touch fitting for ø5/16"	
N9	One-touch fitting for ø5/16"	SY7000
N11	One-touch fitting for ø3/8"	

Manual override

-: Non-locking push type	D: Push-turn locking slotted type	E: Push-turn locking lever type

Coil specifications

-	Standard
T	With power saving circuit (24 VDC, 12 VDC only)

∗ Power saving circuit is not available in the case of D, DO or W□ type.

Light/surge voltage suppressor

Electrical entry for G, H, L, M, W

-	Without light/surge voltage suppressor
S	With surge voltage suppressor
Z	With light/surge voltage suppressor
R	With surge voltage suppressor (Non-polar type)
U	With light/surge voltage suppressor (Non-polar type)

∗ Power saving circuit is only available in the "Z" type.

Electrical entry for D (SY5000/7000 only)

-	Without light/surge voltage suppressor
S	With surge voltage suppressor (Non-polar type)
Z	With light/surge voltage suppressor (Non-polar type)

∗ For AC voltage valves there is no "S" option. It is already built-in to the rectifier circuit.
∗ DOZ is not available.

Rated voltage

For DC

5	24 VDC
6	12 VDC
V	6 VDC
S	5 VDC
R	3 VDC

For AC (50/60Hz)

1	100 VAC
2	200 VAC
3	110 VAC [115 VAC]
4	220 VAC [230 VAC]

∗ DC specifications of type D and DO is only available with 12 and 24 VDC.
∗ AC specification is only available with D and DO type.

Electrical entry

24, 12, 6, 5, 3 VDC			24, 12 VDC/ 100, 110, 200, 220 VAC	24, 12, 6, 5, 3 VDC
Grommet	L plug connector	M plug connector	DIN terminal	M8 connector ∗
G: Lead wire length 300 mm	L: With lead wire (Length 300 mm)	M: With lead wire (Length 300 mm)	(SY5000, 7000) D: With connector	WO: Without connector cable
H: Lead wire length 600 mm	LN: Without lead wire	LO: Without connector	DO: Without connector	W□: With connector cable Note 1)
		MN: Without lead wire		
		MO: Without connector		

∗ LN, MN type: with 2 sockets.
∗ DIN terminal type "Y" which conforms to EN-175301-803C (former DIN43650C) is also available. For details, refer to page 227.
∗ For connector cable of M8 connector, refer to page 230.
∗ Connector M8 type "WA" conforming to IEC 60947-5-2 standard, is also available. For details, see page 211.
Note 1) Enter the cable length symbols in □. Please be sure to fill in the blank referring to page 231.

Specifications

Series		SY3000	SY5000	SY7000
Fluid		Air		
Internal pilot Operating pressure range (MPa)	2 position single	0.15 to 0.7		
	2 position double	0.1 to 0.7		
	3 position	0.2 to 0.7		
Ambient and fluid temperature (°C)		Max. 50		
Max. operating frequency (Hz)	2 position double	10	5	5
	3 position	3	3	3
Manual override (Manual operation)		Non-locking push type, Push-turn locking slotted type, Push-turn locking lever type		
Pilot exhaust method		Common exhaust type for main and pilot valve		
Lubrication		Not required		
Mounting position		Unrestricted		
Impact/Vibration resistance Note)		150/30		
Enclosure		Dust proof (∗ DIN terminal, M8 connector: IP65)		

Note) Impact resistance: No malfunction occurred when it is tested in the axial direction and at the right angles to the main valve and armature in both energised and de-energised states every once for each condition.

Vibration resistance: No malfunction occurred in a one-sweep test between 45 and 2000 Hz. Test was performed at both energised and de-energised states in the axial direction and at the right angles to the main valve and armature. (Values in the initial stage)

∗ Based on IEC60529

Solenoid Specifications

Electrical entry			Grommet (G), (H) L plug connector (L) M plug connector (M) DIN terminal (D) M8 connector (W)	
			G, H, L, M, W	D
Coil rated voltage (V)	DC		24, 12, 6, 5, 3	24, 12
	AC 50/60 Hz		100, 110	200, 220
Allowable voltage fluctuation (%)			±10% of rated voltage ∗	
Power consumption (W)	DC	Standard	0.35 [With indicator light: 0.4 (DIN terminal with indicator light: 0.45)]	
		With power saving circuit	0.1 (With indicator light only)	
Apparent power (VA) ∗	AC	100 V	-	0.78 (With indicator light: 0.87)
		110 V [115 V]	- -	0.86 (With indicator light: 0.97) [0.94 (With indicator light: 1.07)]
		200 V	-	1.15 (With indicator light: 1.30)
		220 V [230 V]	- -	1.27 (With indicator light: 1.46) [1.39 (With indicator light: 1.60)]
Surge voltage suppressor			Diode (Varistor is for DIN terminal and non-polar)	
Indicator light			LED (AC of DIN connector is neon light.)	

∗ In common between 110 VAC and 115 VAC, and between 220 VAC and 230 VAC.

∗ For 115 VAC and 230 VAC, the allowable voltage is –15% to +5% of rated voltage.

∗ S, Z and T type (with power saving circuit) should be used within the following allowable voltage fluctuation range due to a voltage drop caused by the internal circuit.

S and Z type: 24 VDC: –7% to +10%
12 VDC: –4% to +10%
T type: 24 VDC: –8% to +10%
12 VDC: –6% to +10%

Response Time

Note) Based on dynamic performance test, JIS B 8375-1981. (Coil temperature: 20°C, at rated voltage)

SY3000

Type of actuation	Response time (ms) (at the pressure of 0.5 MPa)		
	Without surge voltage suppressor	With surge voltage suppressor	
		S, Z type	R, U type
2 position single	12 or less	15 or less	12 or less
2 position double	10 or less	13 or less	10 or less
3 position	15 or less	20 or less	16 or less

SY5000

Type of actuation	Response time (ms) (at the pressure of 0.5 MPa)		
	Without surge voltage suppressor	With surge voltage suppressor	
		S, Z type	R, U type
2 position single	19 or less	26 or less	19 or less
2 position double	18 or less	22 or less	18 or less
3 position	32 or less	38 or less	32 or less

SY7000

Type of actuation	Response time (ms) (at the pressure of 0.5 MPa)		
	Without light/surge voltage suppressor	With light/surge voltage suppressor	
		S, Z type	R, U type
2 position single	31 or less	38 or less	33 or less
2 position double	27 or less	30 or less	28 or less
3 position	50 or less	56 or less	50 or less

Weight

Series SY3000

Valve model	Type of actuation		Port size	Weight (g)		
			A, B	Gro-mmet	L/M plug connector	M8 Connector
SY3□60-□-M5	2 position	Single	M5	49	51	55
		Double		70	73	81
	3 position	Closed center		73	76	84
		Exhaust center				
		Pressure center				
SY3□60-□-C4	2 position	Single	C4 (One-touch fitting for ø4)	62	61	65
		Double		80	83	91
	3 position	Closed center		82	86	94
		Exhaust center				
		Pressure center				
SY3□60-□-C6	2 position	Single	C6 (One-touch fitting for ø6)	55	57	61
		Double		76	79	87
	3 position	Closed center		78	82	90
		Exhaust center				
		Pressure center				

Note) [ ]: denotes normal position.

Series SY5000

Valve model	Type of actuation		Port size	Weight (g)			
			A, B	Gro-mmet	L/M plug connector	DIN terminal	M8 Conne-ctor
SY5□60-□-01	2 position	Single	1/8	67	69	90	71
		Double		91	94	136	102
	3 position	Closed center		97	100	142	108
		Exhaust center					
		Pressure center					
SY5□60-□-C4	2 position	Single	C4 (One-touch fitting for ø4)	91	93	114	97
		Double		113	116	158	124
	3 position	Closed center		119	122	164	130
		Exhaust center					
		Pressure center					
SY5□60-□-C6	2 position	Single	C6 (One-touch fitting for ø6)	86	88	109	92
		Double		108	111	153	119
	3 position	Closed center		114	117	159	125
		Exhaust center					
		Pressure center					
SY5□60-□-C8	2 position	Single	C8 (One-touch fitting for ø8)	78	80	101	84
		Double		100	103	145	111
	3 position	Closed center		106	109	151	117
		Exhaust center					
		Pressure center					

Series SY7000

Valve model	Type of actuation		Port size	Weight (g)			
			A, B	Gro-mmet	L/M plug connector	DIN terminal	M8 Conne-ctor
SY7□60-□-02	2 position	Single	1/4	103	105	126	109
		Double		125	128	170	136
	3 position	Closed center		133	136	178	144
		Exhaust center					
		Pressure center					
SY7□60-□-C8	2 position	Single	C8 (One-touch fitting for ø8)	138	139	160	143
		Double		160	163	205	171
	3 position	Closed center		168	171	213	179
		Exhaust center					
		Pressure center					
SY7□60-□-C10	2 position	Single	C10 (One-touch fitting for ø10)	123	125	146	129
		Double		145	149	191	157
	3 position	Closed center		153	157	199	165
		Exhaust center					
		Pressure center					

Manifold Option

■ Individual SUP block assembly

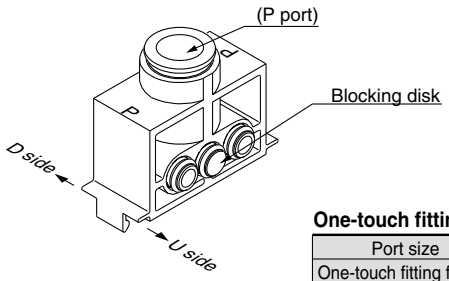

One-touch fitting (Metric size)

Port size	Assembly part no.	Applicable series
One-touch fitting for ø6	SY3000-54-2C-Q	SY3000
One-touch fitting for ø8	SY3000-54-1C-Q	
One-touch fitting for ø10	SY5000-54-1C-Q	SY5000
One-touch fitting for ø12	SY7000-54-1C-Q	SY7000

One-touch fitting (Inch size)

Port size	Assembly part no.	Applicable series
One-touch fitting for ø5/16"	SY3000-54-3C-Q	SY3000
One-touch fitting for ø3/8"	SY5000-54-2C-Q	SY5000
One-touch fitting for ø3/8"	SY7000-54-3C-Q	SY7000

■ Individual EXH block assembly

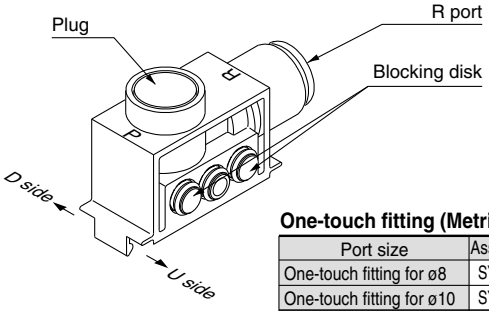

One-touch fitting (Metric size)

Port size	Assembly part no.	Applicable series
One-touch fitting for ø8	SY3000-55-1B-Q	SY3000
One-touch fitting for ø10	SY5000-55-1B-Q	SY5000
One-touch fitting for ø12	SY7000-55-1B-Q	SY7000

One-touch fitting (Inch size)

Port size	Assembly part no.	Applicable series
One-touch fitting for ø5/16"	SY3000-55-2B-Q	SY3000
One-touch fitting for ø3/8"	SY5000-55-2B-Q	SY5000
One-touch fitting for ø3/8"	SY7000-55-3B-Q	SY7000

[When supplying the manifold with 2 different supply pressures.]

Specify arrangement of individual SUP block assembly on the manifold specification sheet. (When using SS5Y□-60-□□D, blocking disk is assembled on D side.)

<Manifold model no.: SS5Y$^{3}_{5}$-60-□□$^{U}_{D}$>

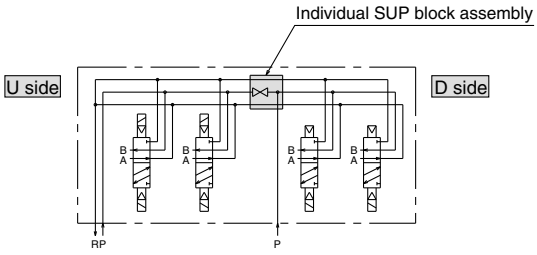

[When 2 different EXH passages are required.]

Specify arrangement of individual EXH block assembly on the manifold specification sheet. (When using SS5Y□-60-□□D, blocking disk is assembled on D side.)

<Manifold model no.: SS5Y$^{3}_{5}$-60-□□$^{U}_{D}$>

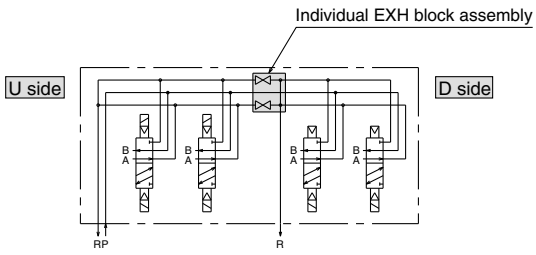

[When a different supply pressure is required for only a middle valve.]

Specify arrangement of individual SUP block assembly and SUP blocking disk on the manifold specification sheet.
(Applicable manifold model no.: SS5Y□-60-□□B)

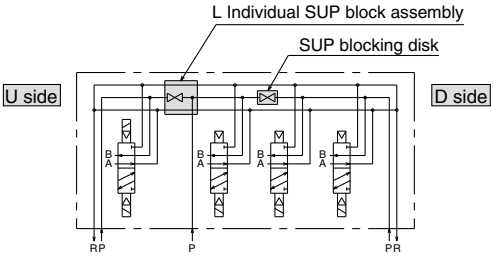

[When a separate exhaust passage is needed on only a middle valve.]

Specify arrangement of individual EXH block assembly and EXH blocking disk on the manifold specification sheet.
(Applicable manifold model no.: SS5Y□-60-□□B)

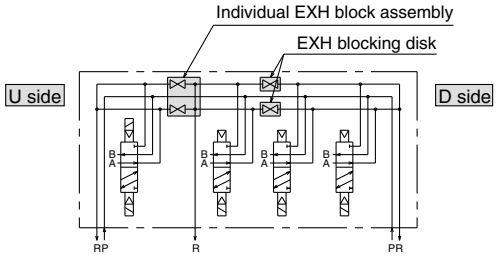

Manifold Option

■ SUP blocking disk

By installing a SUP blocking disk in the pressure supply passage of a manifold valve, it is possible to supply two or more different high and low pressures to one manifold. (This is the same block disk used with the individual SUP block assembly.)



Series	No.
SY3000	SY3000-52-6A
SY5000	SY5000-52-4A
SY7000	SY7000-70-2A

■ EXH blocking disk

By installing an EXH blocking disk in the exhaust passage of a manifold valve, it is possible to divide the valve's exhaust so that it does not affect another valve. (Two blocking disks are needed to separate both EXH passages. It is the same block disk that is used in the individual EXH block assembly.)



Series	No.
SY3000	SY3000-52-6A
SY5000	SY5000-52-4A
SY7000	SY7000-70-2A

■ Label for block disk

The labels shown below are used on manifold stations containing SUP/EXH blocking disk(s) to show their location. (3 pcs. each)

VZ3000-123-1A

Label for SUP block disk

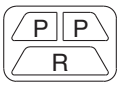

Label for EXH block disk

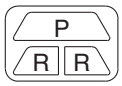

Label for SUP/EXH block disk

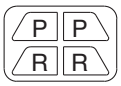

∗ When a block disk is concurrently ordered by specifying on the manifold specification sheet, etc., a label will be stuck on the position where block disk is mounted.

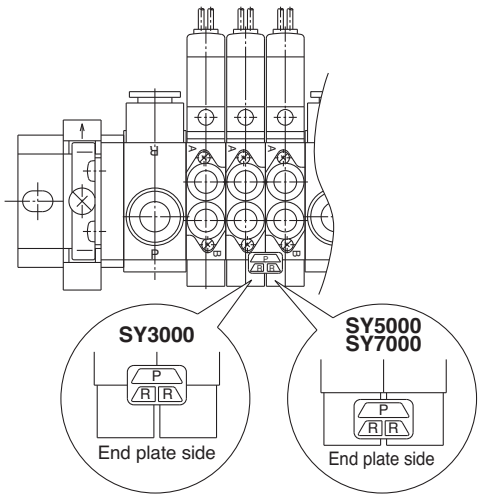

■ Silencer with One-touch fitting

The silencer plugs directly into the One-touch fittings of the manifold.

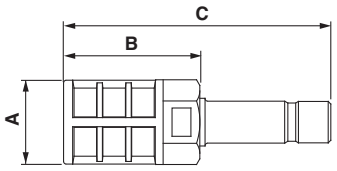

Series	Model	Effective area	A	B	C
SY3000 (for ø8)	AN203-KM8	14 mm²	ø16	26	51
SY5000 (for ø10)	AN200-KM10	26 mm²	ø22	54	80.8
	AN300-KM10	30 mm²	ø25	70	97
SY7000 (for ø12)	AN300-KM12	41 mm²	ø25	70	98

■ Plug

These are inserted in unused cylinder ports and SUP, EXH ports.
Purchasing order is available in units of 10 pieces.

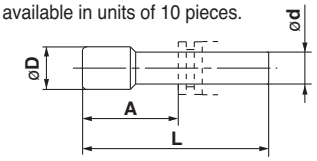

Dimensions

Applicable fittings size ød	Model	A	L	D
4	**KQ2P-04**	16	32	6
6	**KQ2P-06**	18	35	8
8	**KQ2P-08**	20.5	39	10
10	**KQ2P-10**	22	43	12
12	**KQ2P-12**	24	45.5	14
5/32"	**KQ2P-03**	16	32	6
1/4"	**KQ2P-07**	18	35	8.5
5/16"	**KQ2P-09**	20.5	39	10
3/8"	**KQ2P-11**	22	43	11.5

■ DIN Rail Dimensions/Weight for SY3000/5000

VZ1000-11-1-□

• Refer to the L dimension tables

∗ Enter a number from the DIN rail dimension table below in them.

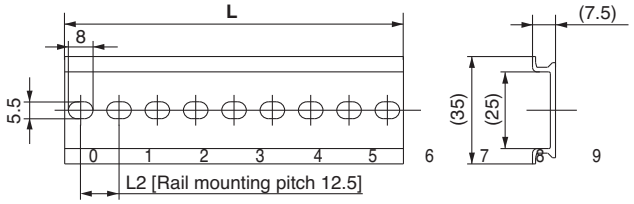

No.	0	1	2	3	4	5	6	7	8	9
L dimension	98	110.5	123	135.5	148	160.5	173	185.5	198	210.5
Weight (g)	17.6	19.9	22.1	24.4	26.6	28.9	31.1	33.4	35.6	37.9

No.	10	11	12	13	14	15	16	17	18	19
L dimension	223	235.5	248	260.5	273	285.5	298	310.5	323	335.5
Weight (g)	40.1	42.4	44.6	46.9	49.1	51.4	53.6	55.9	58.1	60.4

No.	20	21	22	23	24	25	26	27	28	29
L dimension	348	360.5	373	385.5	398	410.5	423	435.5	448	460.5
Weight (g)	62.6	64.9	67.1	69.4	71.6	73.9	76.1	78.4	80.6	82.9

■ DIN Rail Dimensions/Weight for SY7000

VZ1000-11-4-□

• Refer to the L dimension tables

∗ Enter a number from the DIN rail dimension table below in them.

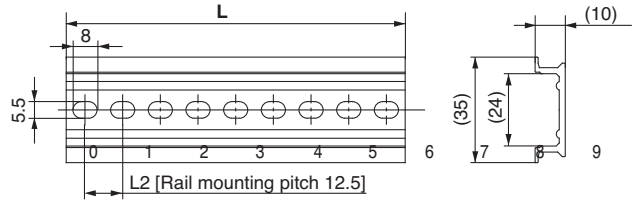

No.	0	1	2	3	4	5	6	7	8	9
L dimension	98	110.5	123	135.5	148	160.5	173	185.5	198	210.5
Weight (g)	24.8	28	31.1	34.3	37.4	40.6	43.8	46.9	50.1	53.3

No.	10	11	12	13	14	15	16	17	18	19
L dimension	223	235.5	248	260.5	273	285.5	298	310.5	323	335.5
Weight (g)	56.4	59.6	62.7	65.9	69.1	72.2	75.4	78.6	81.7	84.9

No.	20	21	22	23	24	25	26	27	28	29
L dimension	348	360.5	373	385.5	398	410.5	423	435.5	448	460.5
Weight (g)	88	91.2	94.4	97.5	100.7	103.9	107	110.2	113.3	116.5

Note) For DIN rail mounting, refer to page 229.

Construction

Series SY

JIS Symbol

2 position single

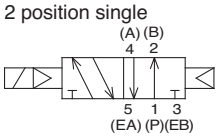

2 position single

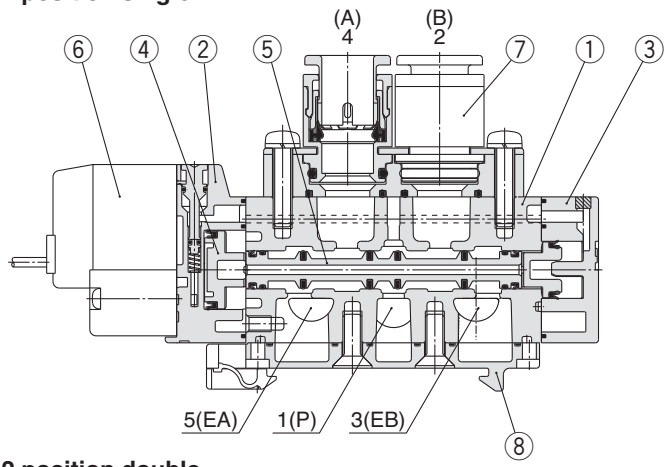

JIS Symbol

2 position double

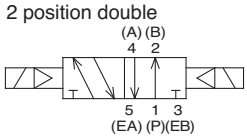

2 position double

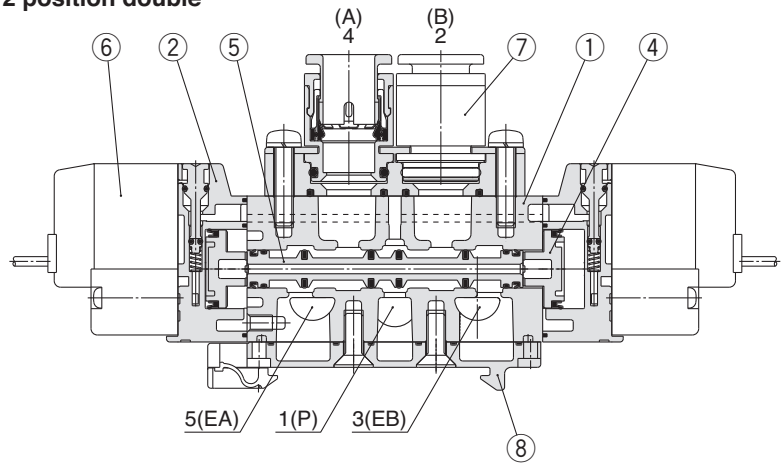

JIS Symbol

3 position closed center

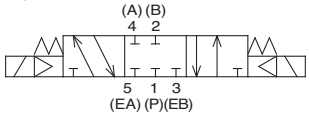

3 position exhaust center

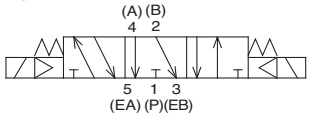

3 position pressure center

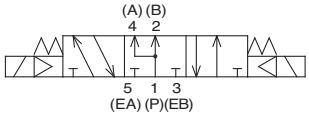

3 position closed center / exhaust center / pressure center

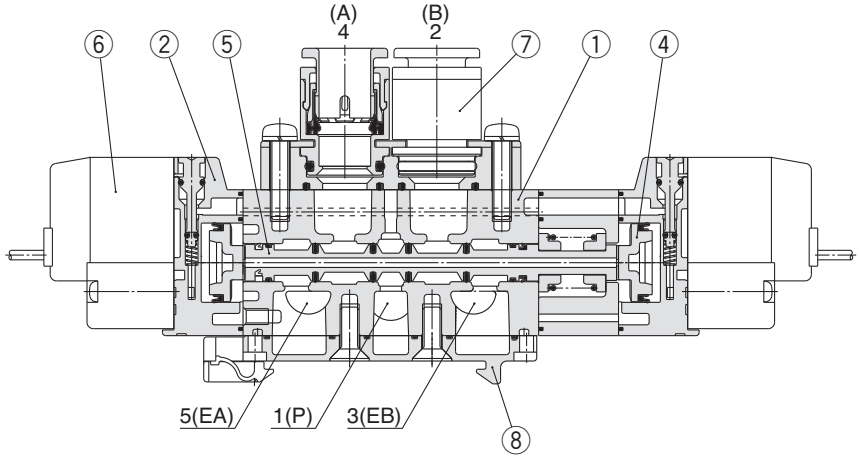

(This figure shows a closed center type.)

Component Parts

No.	Description	Material	Note
1	Body	Aluminum die-casted (SY3000: Zinc die-casted)	White
2	Adapter plate	Resin	White
3	End plate	Resin	White
4	Piston	Resin	—
5	Spool valve assembly	Aluminum/NBR	—

Replacement Parts

No.	Description	No.
6	Pilot valve assembly	Refer to “How to Order Pilot Valve Assembly” on page 218.
7	Port block assembly	Refer to “How to Order Port Block Assembly” on page 218.
8	Bottom cover assembly Note)	SY3000-41-2A (with screw, gasket)
		SY5000-41-2A (with screw, gasket)

Note) There is no bottom cover assembly available for SY7000.

Dimensions

SS5Y3-60-Stations U-Q

Stations	2 stations	3	4	5	6	7	8	9	10 stations
L1	98	110.5	123	135.5	135.5	148	160.5	173	185.5
L2	87.5	100	112.5	125	125	137.5	150	162.5	175
L3	69.5	80	90.5	101	111.5	122	132.5	143	153.5
L4	14	15	16	17	12	13	14	15	16

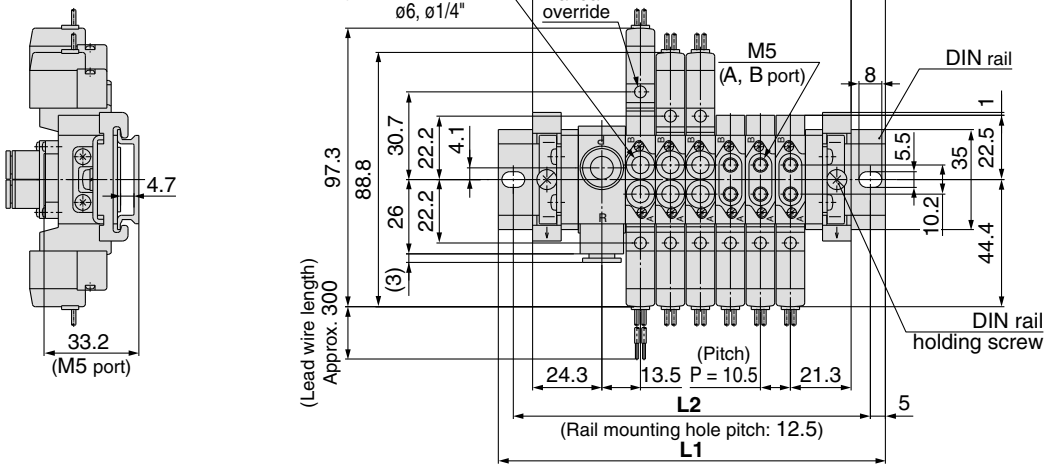

SS5Y3-60-Stations D-Q

Stations	2 stations	3	4	5	6	7	8	9	10 stations
L1	98	110.5	123	135.5	135.5	148	160.5	173	185.5
L2	87.5	100	112.5	125	125	137.5	150	162.5	175
L3	69.5	80	90.5	101	111.5	122	132.5	143	153.5
L4	14	15	16	17	12	13	14	15	16

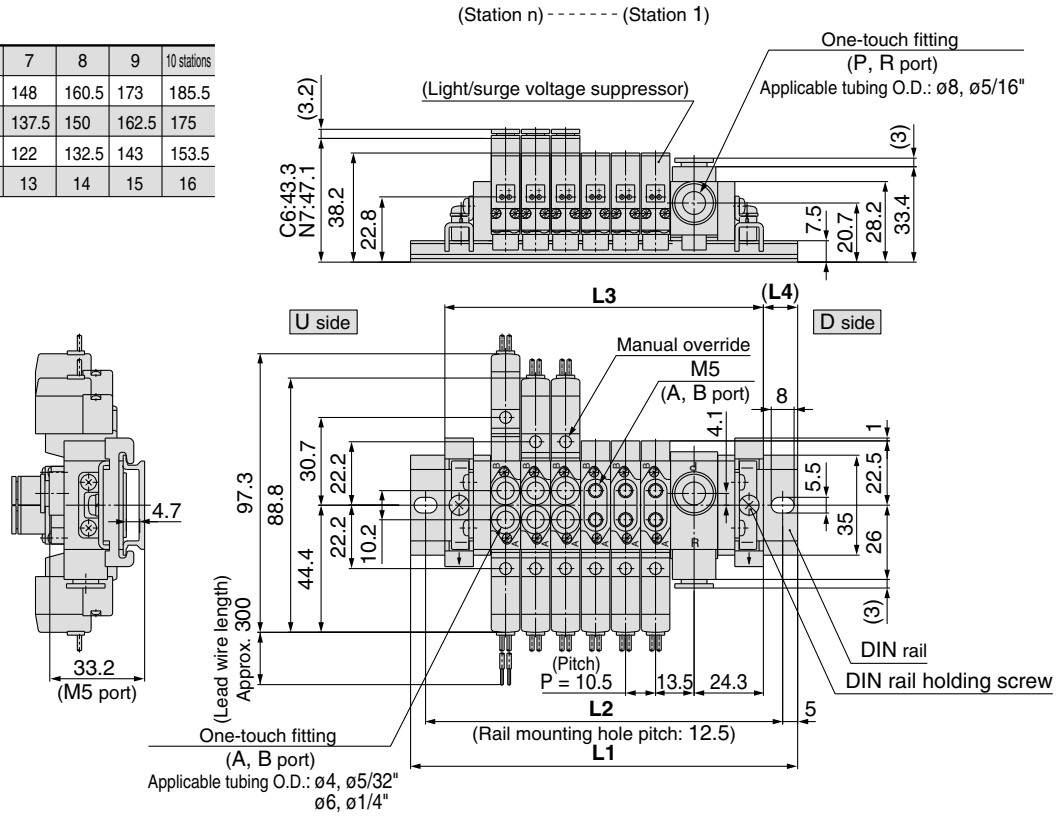

SS5Y3-60-[Stations] B-Q

Stations	2 stations	3	4	5	6	7	8	9	10 stations
L1	110.5	123	135.5	148	160.5	173	173	185.5	198
L2	100	112.5	125	137.5	150	162.5	162.5	175	187.5
L3	86	96.5	107	117.5	128	138.5	149	159.5	170
L4	12	13	14	15	16	17	12	13	14

Stations	11 stations	12	13	14	15	16	17	18	19	20 stations
L1	210.5	223	235.5	235.5	248	260.5	273	285.5	298	310.5
L2	200	212.5	225	225	237.5	250	262.5	275	287.5	300
L3	180.5	191	201.5	212	222.5	233	243.5	254	264.5	275
L4	15	16	17	11.5	12.5	13.5	14.5	15.5	16.5	17.5

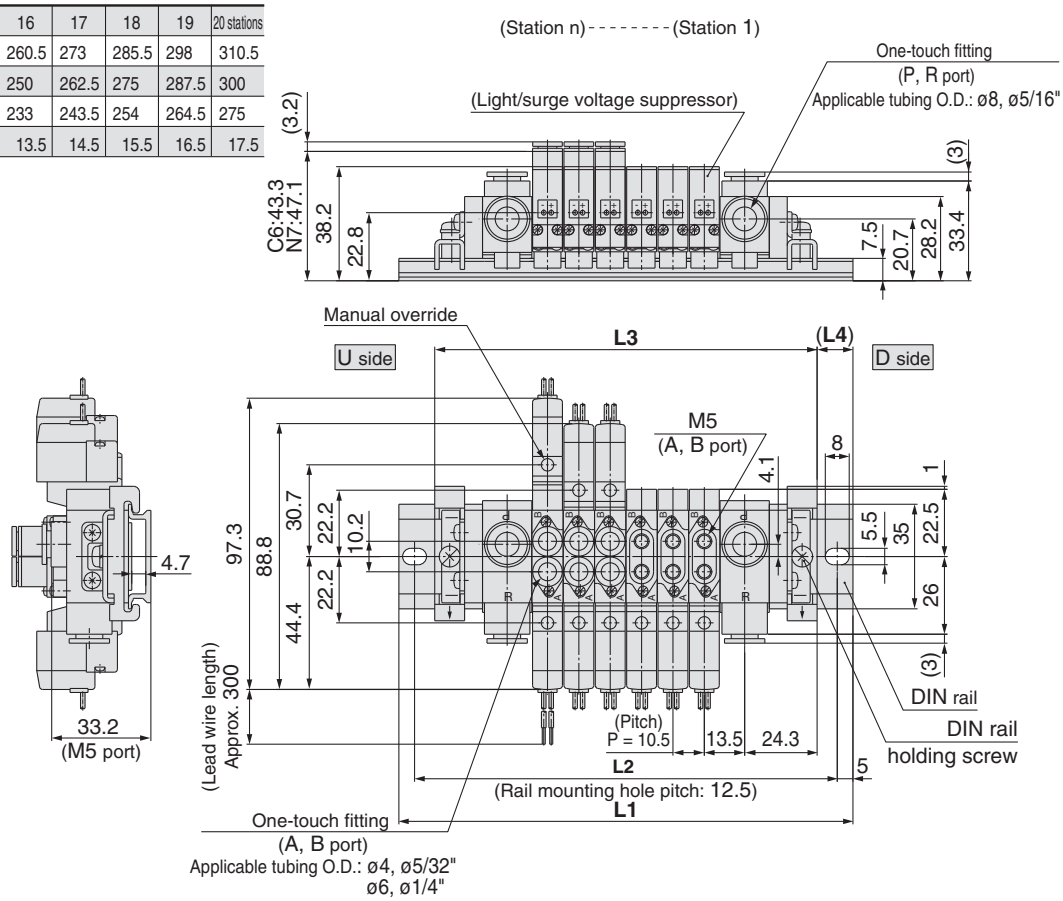

L plug connector (L)

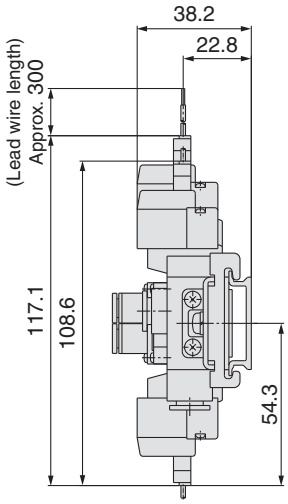

M plug connector (M)

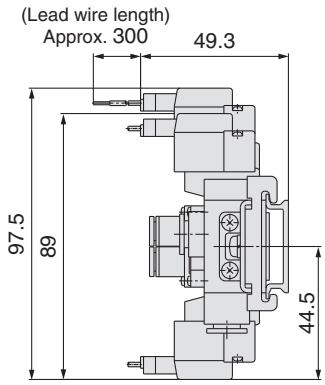

M8 connector (WO)

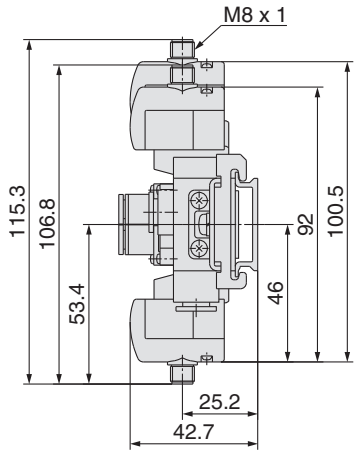

Note) Refer to back page 12 for dimensions of connector types.

Dimensions (mm)

SS5Y5-60-Stations U-Q

Stations	2 stations	3	4	5	6	7	8	9	10 stations
L1	123	135.5	148	160.5	185.5	198	210.5	235.5	248
L2	112.5	125	137.5	150	175	187.5	200	225	237.5
L3	88	104	120	136	152	168	184	200	216
L4	17.5	15.5	14	12	16.5	15	13	17.5	16

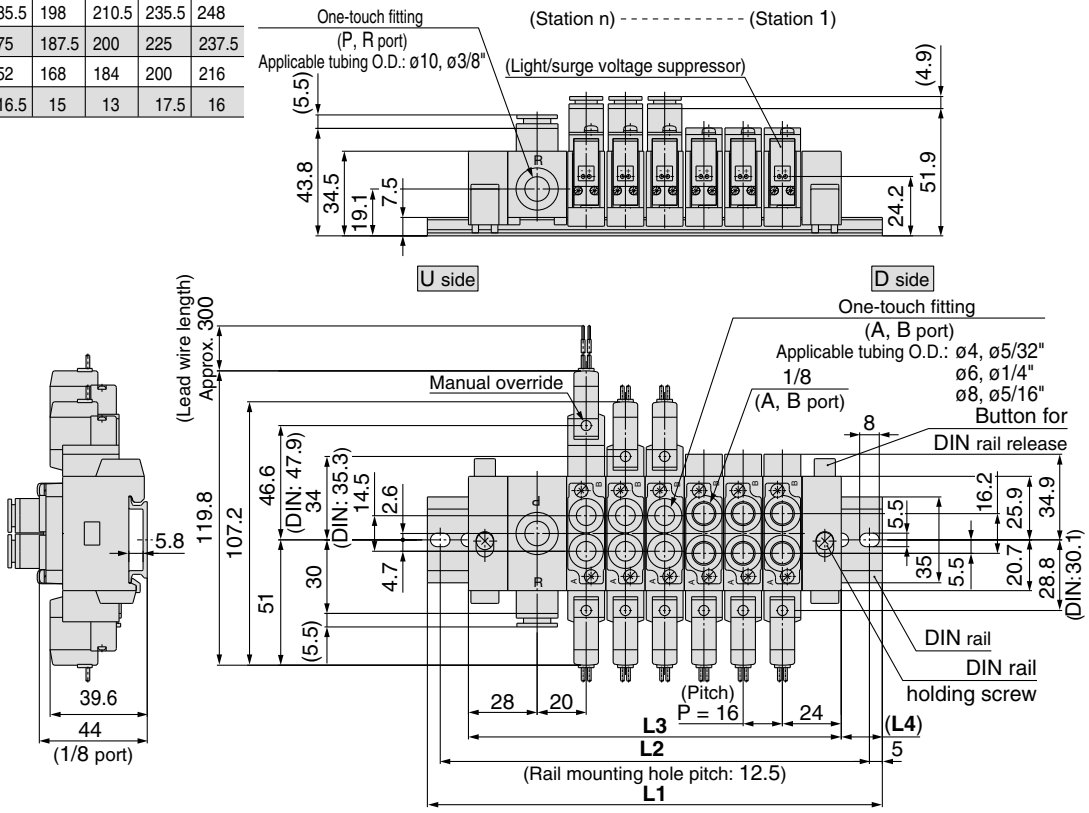

SS5Y5-60-Stations D-Q

Stations	2 stations	3	4	5	6	7	8	9	10 stations
L1	123	135.5	148	160.5	185.5	198	210.5	235.5	248
L2	112.5	125	137.5	150	175	187.5	200	225	237.5
L3	88	104	120	136	152	168	184	200	216
L4	17.5	15.5	14	12	16.5	15	13	17.5	16

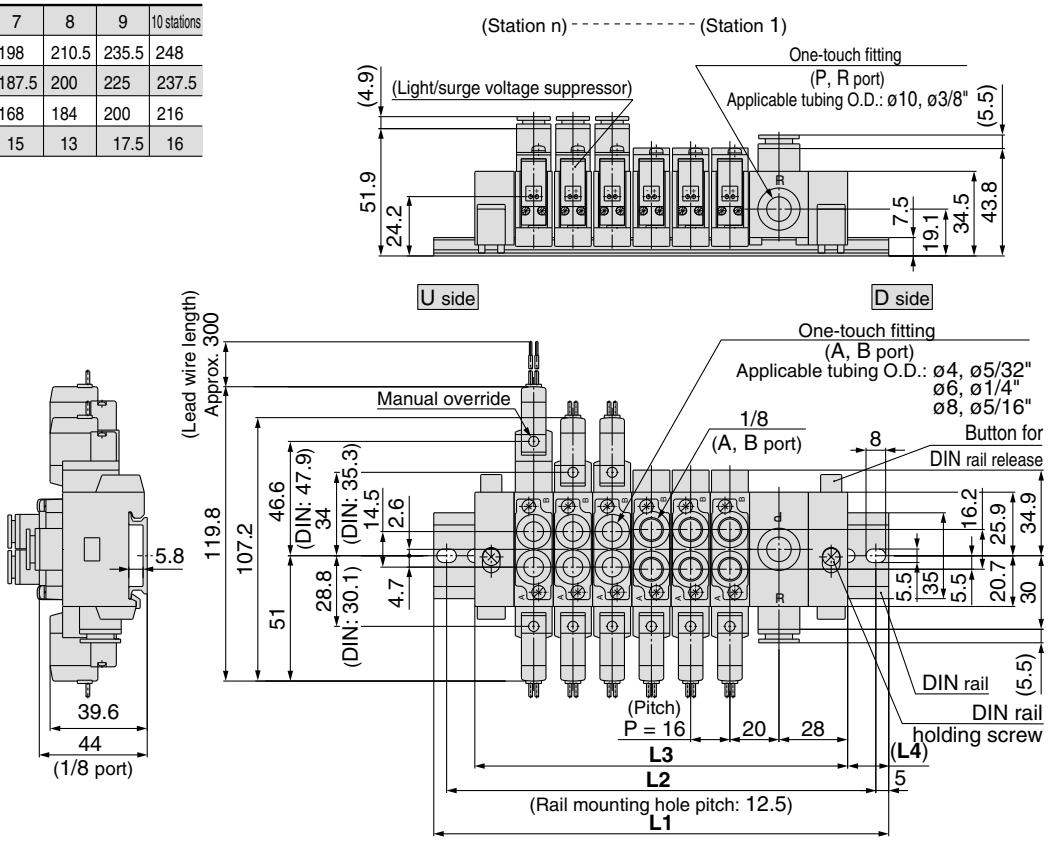

SS5Y5-60-Stations B-Q

Stations	2 stations	3	4	5	6	7	8 stations
L1	135.5	160.5	173	185.5	210.5	223	235.5
L2	125	150	162.5	175	200	212.5	225
L3	112	128	144	160	176	192	208
L4	11.5	16	14.5	12.5	17.5	15.5	13.5

Stations	9 stations	10	11	12	13	14	15 stations
L1	248	273	285.5	298	323	335.5	348
L2	237.5	262.5	275	287.5	312.5	325	337.5
L3	224	240	256	272	288	304	320
L4	12	16.5	14.5	13	17.5	15.5	14

Stations	16 stations	17	18	19	20 stations
L1	360.5	385.5	398	410.5	435.5
L2	350	375	387.5	400	425
L3	336	352	368	384	400
L4	12	16.5	15	13	17.5

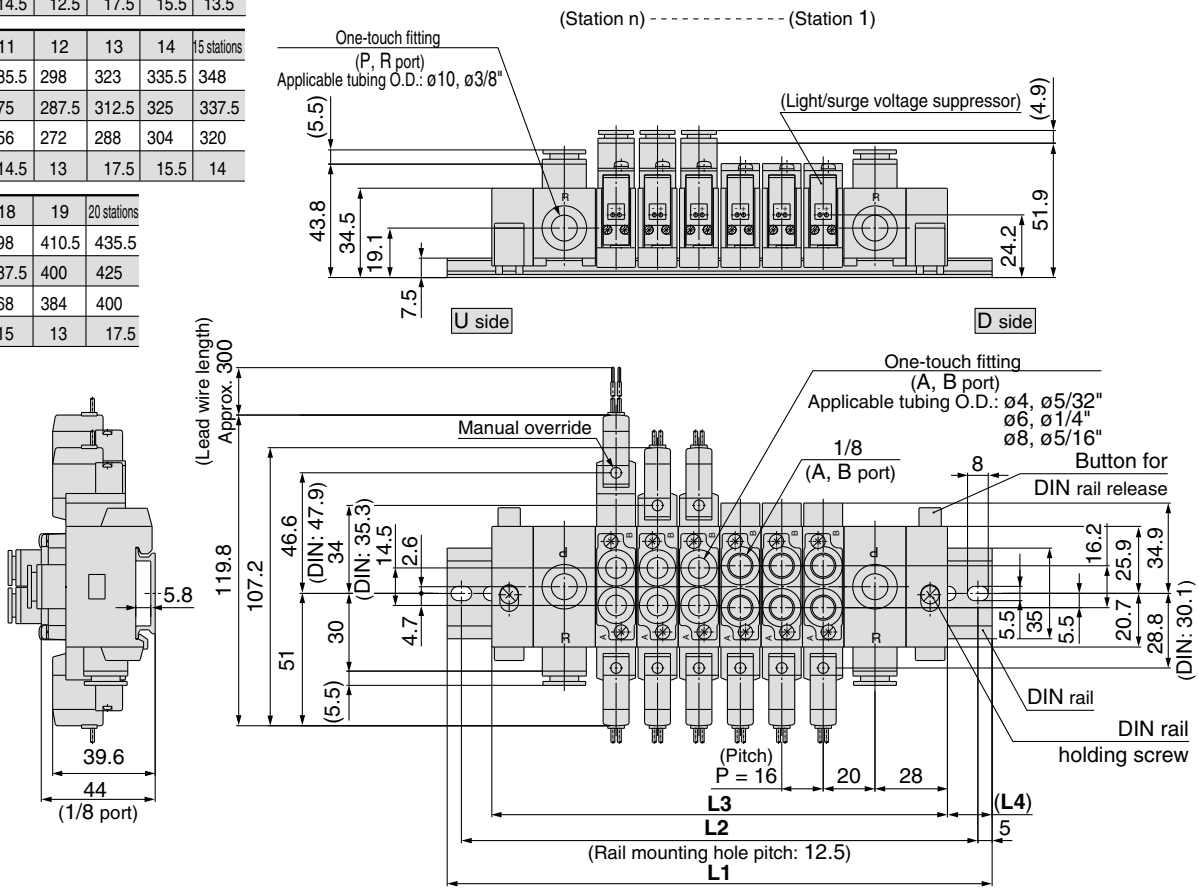

L plug connector (L) **M plug connector (M)** **DIN terminal (D)** **M8 connector (WO)**

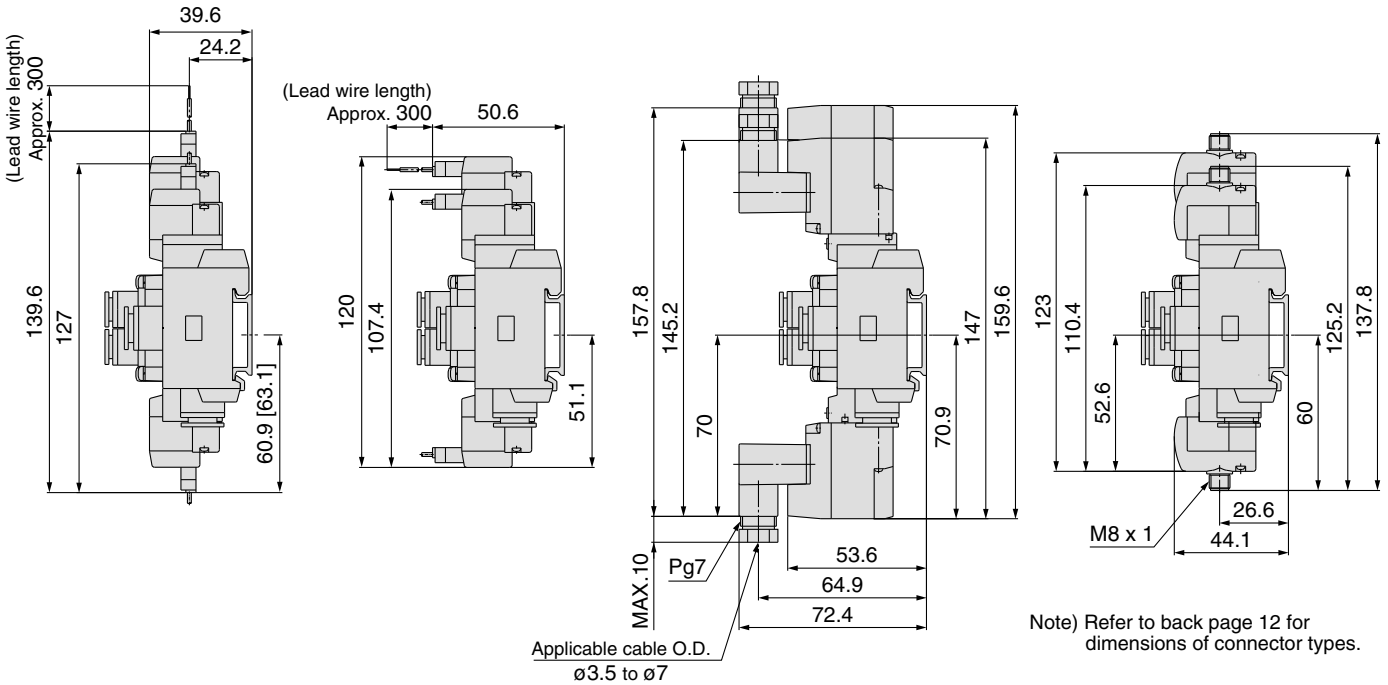

Note) Refer to back page 12 for dimensions of connector types.

Dimensions

SS5Y7-60-Stations U-Q

Stations	2 stations	3	4	5	6	7	8	9	10 stations
L1	135.5	148	173	185.5	210.5	223	248	260.5	285.5
L2	125	137.5	162.5	175	200	212.5	237.5	250	275
L3	103	122	141	160	179	198	217	236	255
L4	16	13	16	12.5	15.5	12.5	15.5	12	15

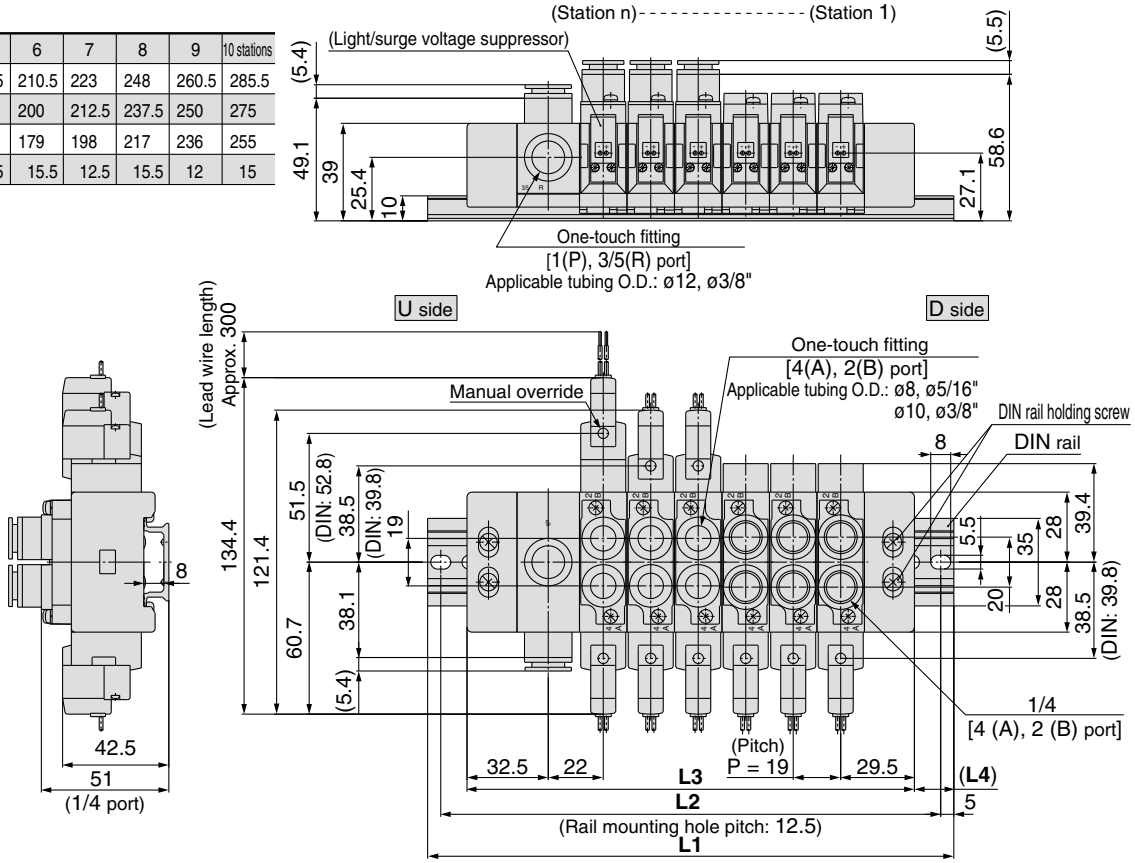

SS5Y7-60-Stations D-Q

Stations	2 stations	3	4	5	6	7	8	9	10 stations
L1	135.5	148	173	185.5	210.5	223	248	260.5	285.5
L2	125	137.5	162.5	175	200	212.5	237.5	250	275
L3	103	122	141	160	179	198	217	236	255
L4	16	13	16	12.5	15.5	12.5	15.5	12	15

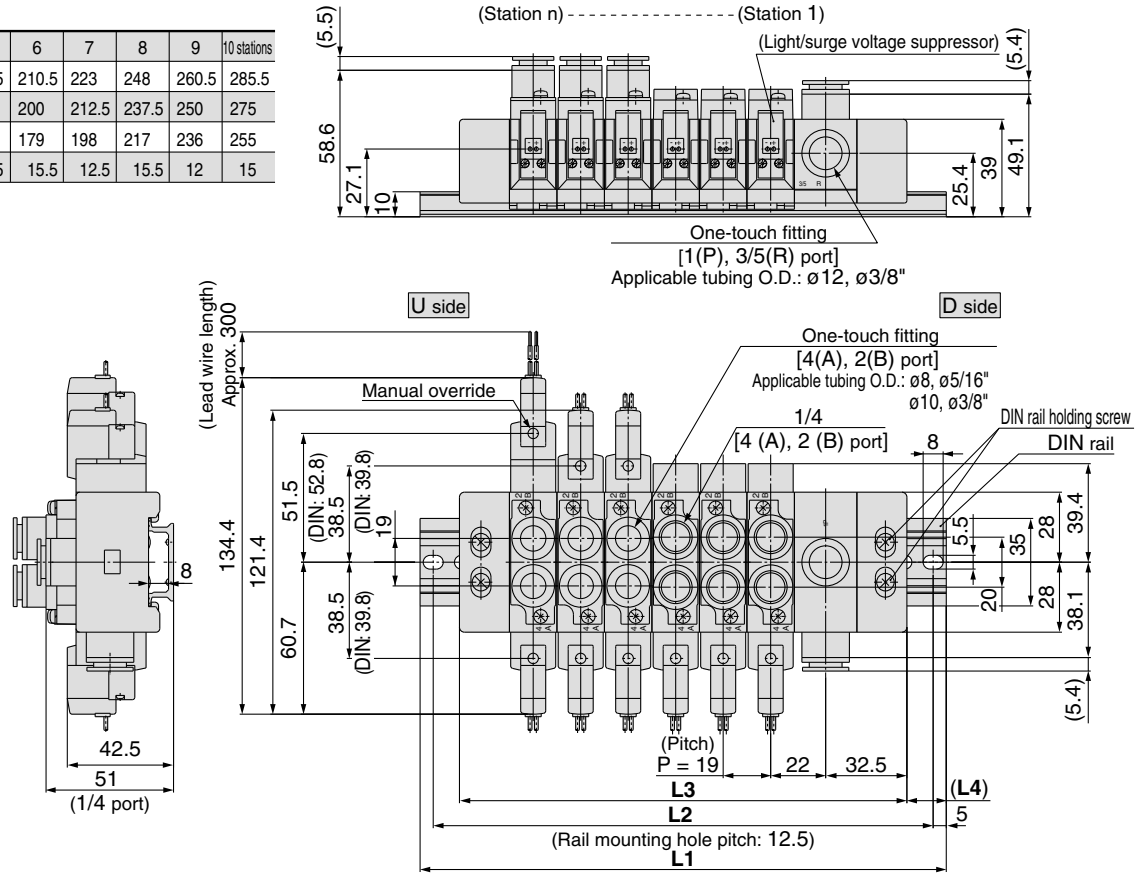

SS5Y7-60-Stations B-Q

Stations	2 stations	3	4	5	6	7	8 stations
L1	160.5	173	198	210.5	235.5	248	273
L2	150	162.5	187.5	200	225	237.5	262.5
L3	128	147	166	185	204	223	242
L4	16	13	16	12.5	15.5	12.5	15.5

Stations	9 stations	10	11	12	13	14	15 stations
L1	285.5	310.5	323	348	360.5	385.5	410.5
L2	275	300	312.5	337.5	350	375	400
L3	261	280	299	318	337	356	375
L4	12	15	12	15	11.5	14.5	17.5

Stations	16 stations	17	18	19	20 stations
L1	423	448	460.5	485.5	498
L2	412.5	437.5	450	475	487.5
L3	394	413	432	451	470
L4	14.5	17.5	14	17	14

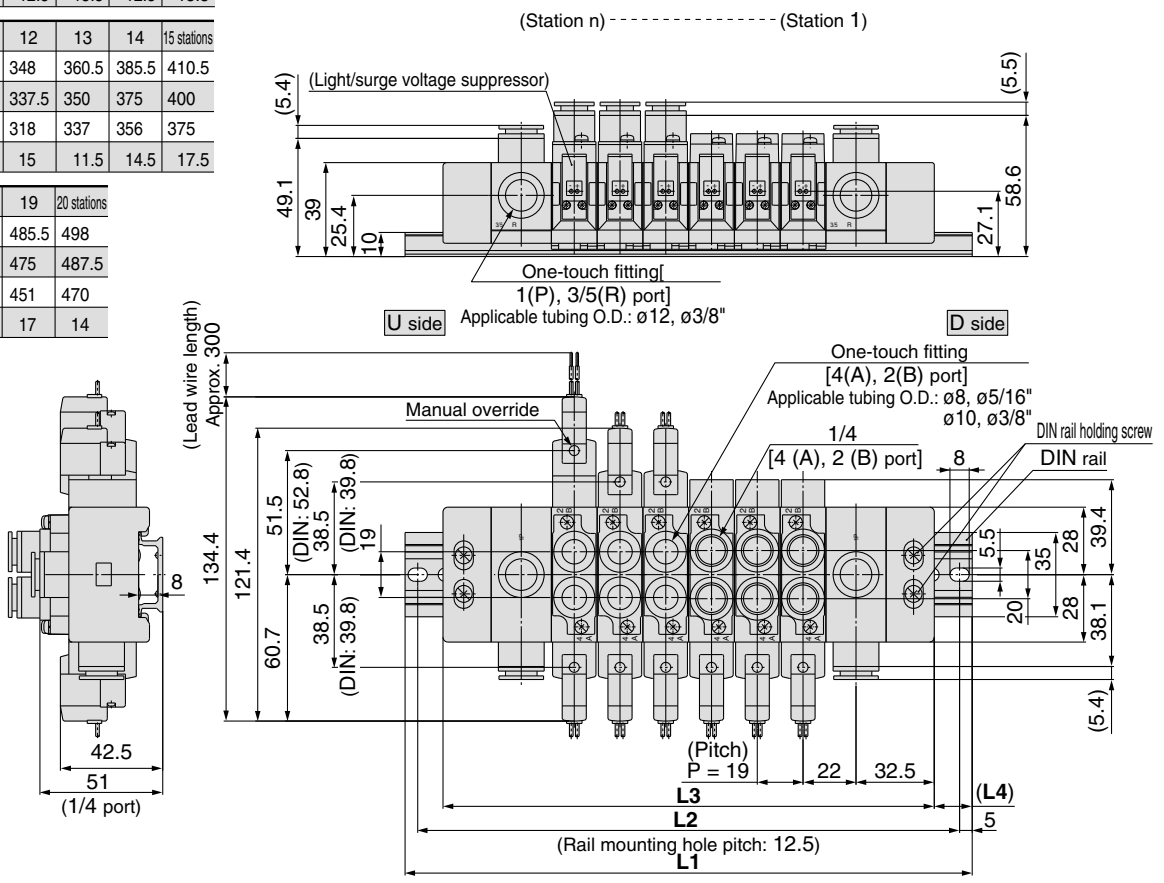

L plug connector (L) **M plug connector (M)** **DIN terminal (D)** **M8 connector (WO)**

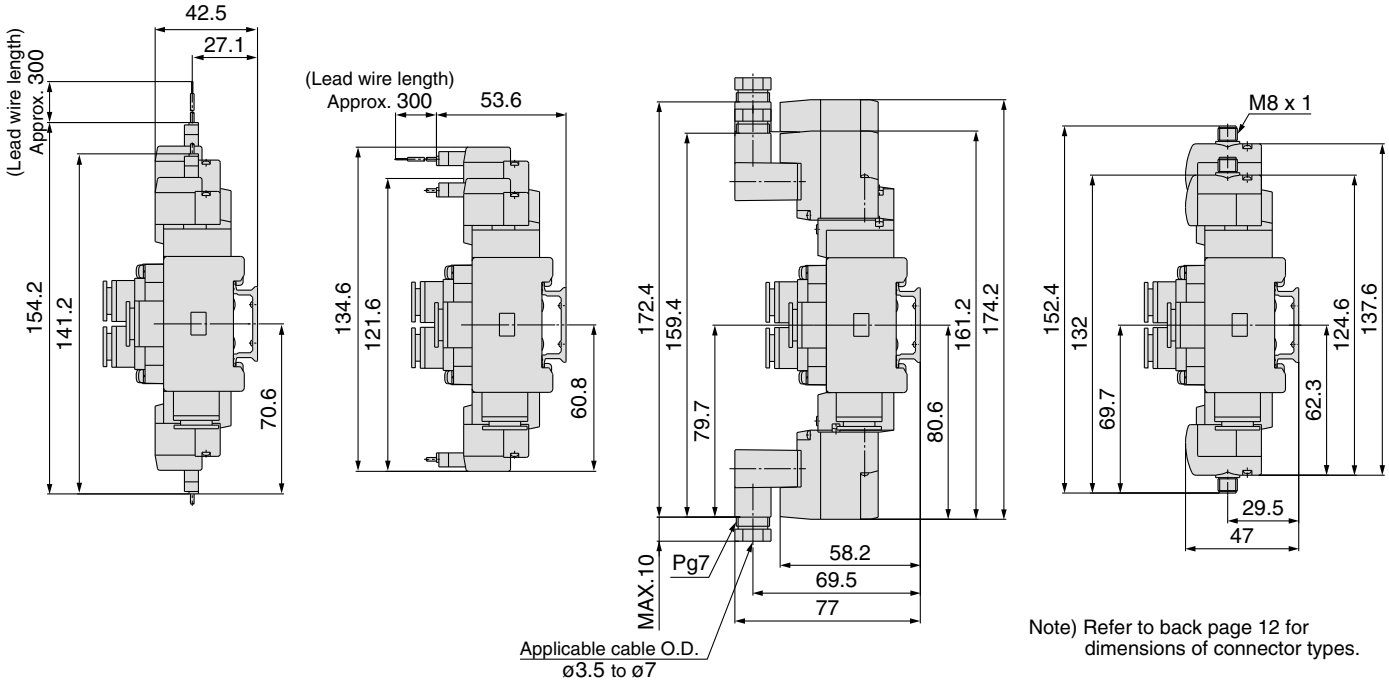

Note) Refer to back page 12 for dimensions of connector types.

DIN Rail Manifold Exploded View

SY3000
Type 60

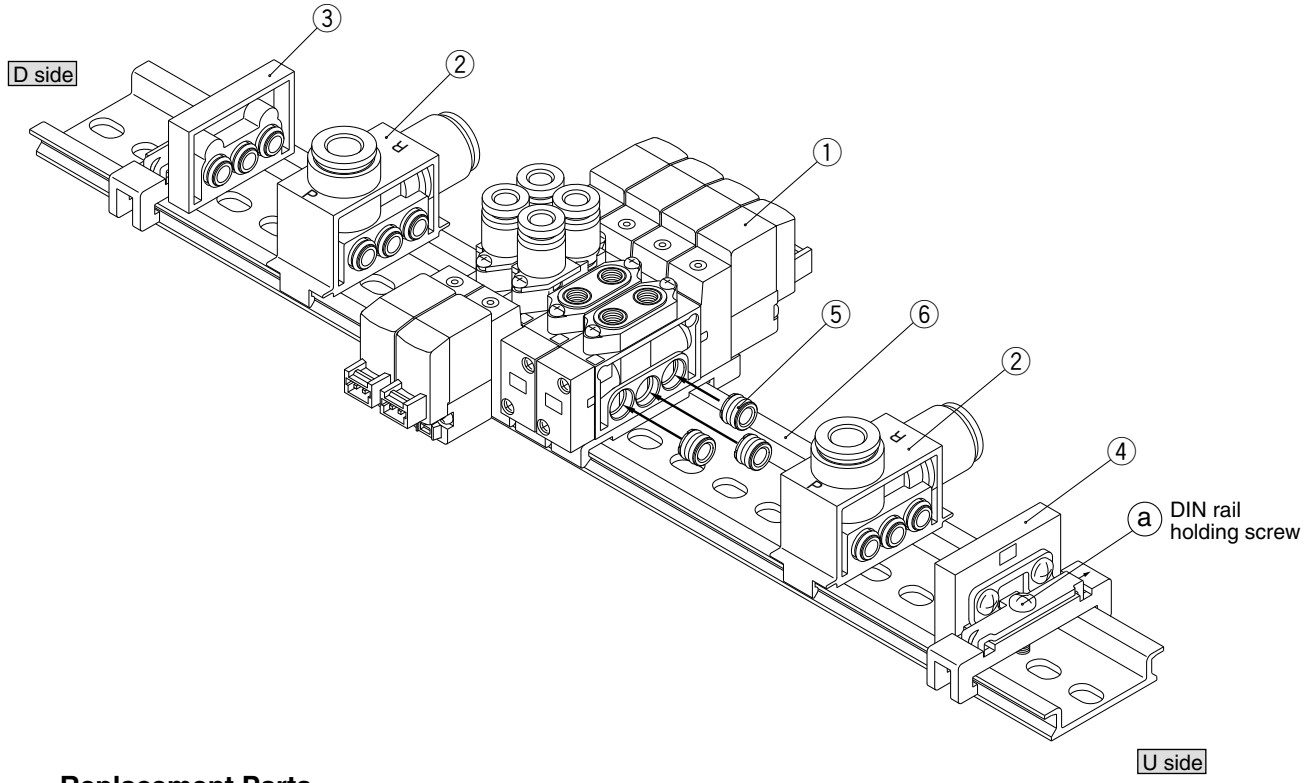

Replacement Parts

No.	Description	No.	Note
1	Valve	**SY3□60-□□-□-Q**	□ at the end of part number denotes A. B port size: M5, C4, C6, N3, N7. Includes bushing assembly (SY3000-52-5A) 3 pcs.
2	SUP/EXH block assembly	**SY3000-55-$\frac{1}{2}$A-Q**	P, R port (1: One-touch fitting for ø8, 2: One-touch fitting for ø5/16") Includes bushing assembly (SY3000-52-5A) 3 pcs.
3	End block assembly	**SY3000-56-1A-Q**	For D side (Bushing assembly: Not available for SY3000-52-5A)
4	End block assembly	**SY3000-56-1B-Q**	For U side (Bushing assembly: Not available for SY3000-52-5A)
5	Bushing assembly	**SY3000-52-5A**	
6	DIN rail	**VZ1000-11-1-□**	Refer to page 67.

SY5000
Type 60

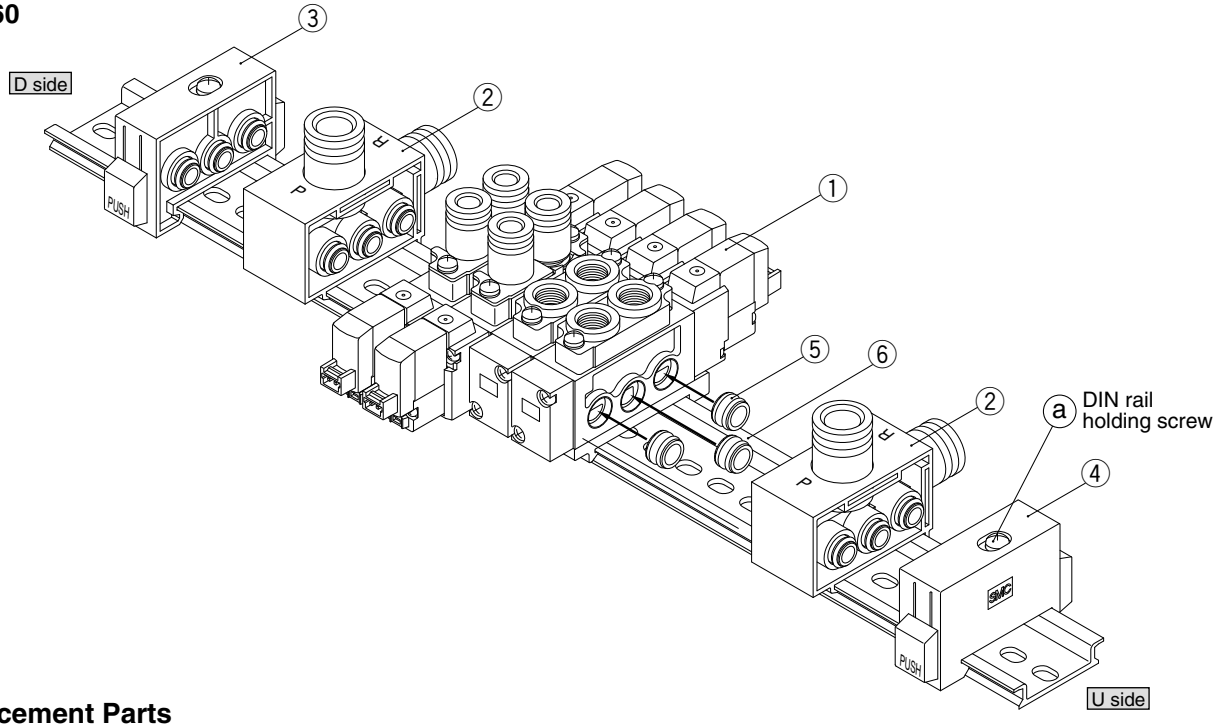

Replacement Parts

No.	Description	No.	Note
1	Valve	**SY5□60-□□-□-Q**	□ at the end of part number denotes A. B port size: 01, C4, C6, C8, N3, N7, N9. Includes bushing assembly (SY5000-52-3A) 3 pcs.
2	SUP/EXH block assembly	**SY5000-55-$\frac{1}{2}$A-Q**	P, R port (1: One-touch fitting for ø10, 2: One-touch fitting for ø3/8") Includes bushing assembly (SY5000-52-3A) 3 pcs.
3	End block assembly	**SY5000-56-1A-Q**	For D side (Bushing assembly: Not available for SY5000-52-3A)
4	End block assembly	**SY5000-56-1B-Q**	For U side (Bushing assembly: Not available for SY5000-52-3A)
5	Bushing assembly	**SY5000-52-3A**	
6	DIN rail	**VZ1000-11-1-□**	Refer to page 67.

How to Add Additional Valves to the DIN Rail
Valves can be added at any station on the rail.

1 **Loosen the manifold base clamping screw ⓐ.**

2 **Separate the valves at the point where more valves are to be added.**

3 **Mount the additional valves on the DIN rail as shown in Fig. 1**

4 **Connect them together while pressing the block assemblies toward each others, and tighten the holding screw ⓐ to fix them to the DIN rail.**

⚠Caution

Tightening torque

SY3000: 1 N·m

SY5000: 1.4 N·m

(While lightly holding the blocks after fixing an end block on one side, tighten the other end block for better sealing after no gap between valves is confirmed.)

- **Bushing assembly must be seated properly to each valve block in order to prevent air leaks from occurring.**
- **Refer to the fig. 2 when dismounting the valve from the DIN rail.**

Fig. 1 Manifold mounting procedure

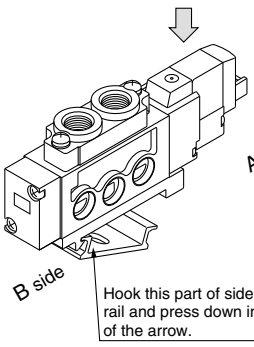

Fig. 2 Manifold dismounting procedure

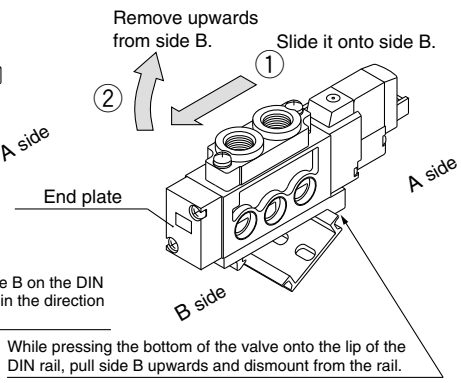

⚠Caution When clamping screw ⓐ of the end block is not sufficiently tightened during reassembly, air leakage may result. Before supplying air, check that there are no gaps between valves and that the end block is firmly secured to the DIN rain in order to ensure air supply without leakage.

DIN Rail Manifold Exploded View

SY7000

Type 60

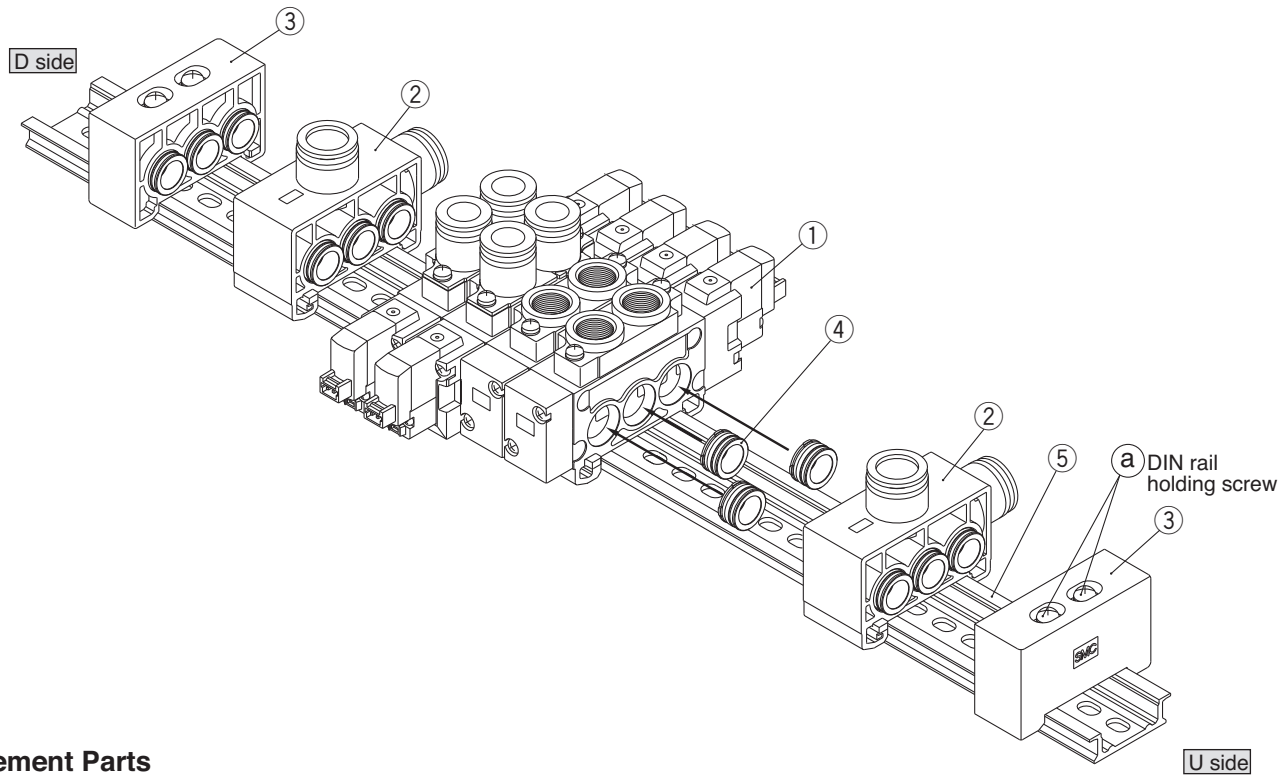

Replacement Parts

No.	Description	No.	Note
1	Valve	**SY7□60-□□-□-Q**	□ at the end of part number denotes A. B port size: 02, C8, C10, N9, N11. Includes bushing assembly (SY7000-70-1A) 3 pcs.
2	SUP/EXH block assembly	**SY7000-75-$^{1}_{3}$A-Q**	P,R port size (1: ø12 One-touch fitting, 3: 3/8" One-touch fitting) Includes bushing assembley (SY7000-70-1A) 3pcs.
3	End block assembly	**SY7000-56-1A-Q**	In common for D side and U side (Bushing assembly: Not available for SY7000-70-1A.)
4	Bushing assembly	**SY7000-70-1A**	
5	DIN rail	**VZ1000-11-4-□**	Refer to page 67.

How to Add Additional Valves to the DIN Rail

Valves can be added at any station on the rail.

1 **Loosen the rail holding screw ⓐ at both of 2 locations which holds the manifold base either in the U side or D side.**

When removing the end block assembly from the DIN rail, loosen the holding screws for DIN rail at first, then slide it to the edge of the rail.

2 **Separate the valves at the point where more valves are to be added.**

3 **Mount the additional valves on the DIN rail as shown in Fig. 1.**

4 **Connect them together while pressing the block assemblies toward each others, and tighten the 2 holding screws ⓐ for DIN rail alternately (2 to 3 times) with the prescribed torque (1.4 N·m) to fix them to the DIN rail.**

⚠Caution

Tightening torque

SY7000: 1.4 N·m

(While lightly holding the blocks after fixing an end block on one side, tighten the other end block for better sealing after no gap between valves is confirmed.)

- **Bushing assembly must be seated properly to each valve block in order to prevent air leaks from occurring.**
- **Refer to the fig. 2 when dismounting the valve from the DIN rail.**

Fig. 1 Manifold mounting procedure

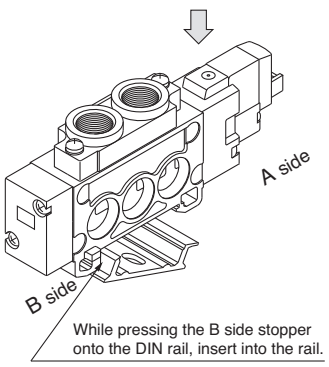

Fig. 2 Manifold dismounting procedure

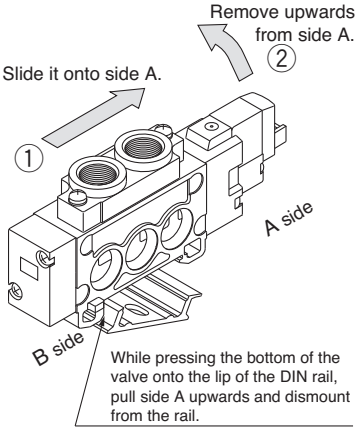

⚠Caution When clamping screw ⓐ of the end block is not sufficiently tightened during reassembly, air leakage may result. Before supplying air, check that there are no gaps between valves and that the end block is firmly secured to the DIN rain in order to ensure air supply without leakage.

Type 41
Type 42

5 Port Solenoid Valve
Series SY3000/5000/7000
Base Mounted
Bar Stock Type/Individual Wiring

How to Order Manifold

Type 41/Compact style

SS5Y 5 — 41 — 05 — C8 □ -Q

Manifold series

3	SY3000
5	SY5000

Stations

02	2 stations
⋮	⋮
20	20 stations

∗ This also includes the number of blanking plate assemblies.

Thread type

-	Rc
F	G
N	NPT
T	NPTF

∗ Except for M5

A, B port size

Thread piping

Symbol	Port size	Applicable series
M5	M5	SY3000
01	1/8	SY5000

One-touch fitting (Metric size)

Symbol	Port size	Applicable series
C4	One-touch fitting for ø4	SY3000
C6	One-touch fitting for ø6	
C6	One-touch fitting for ø6	SY5000
C8	One-touch fitting for ø8	

One-touch fitting (Inch size)

Symbol	Port size	Applicable series
N3	One-touch fitting for ø5/32"	SY3000
N7	One-touch fitting for ø1/4"	
N7	One-touch fitting for ø1/4"	SY5000
N9	One-touch fitting for ø5/16"	

Type 42/External pilot capable

SS5Y 5 — 42 — 05 — C8 □ -Q

Manifold series

3	SY3000
5	SY5000
7	SY7000

Stations

02	2 stations
⋮	⋮
20	20 stations

Thread type

-	Rc
F	G
N	NPT
T	NPTF

A, B port size

Thread piping

Symbol	Port size	Applicable series
01	1/8	SY3000
02	1/4	SY5000
02	1/4	SY7000

One-touch fitting (Metric size)

Symbol	Port size	Applicable series
C4	One-touch fitting for ø4	SY3000
C6	One-touch fitting for ø6	
C6	One-touch fitting for ø6	SY5000
C8	One-touch fitting for ø8	
C10	One-touch fitting for ø10	SY7000

One-touch fitting (Inch size)

Symbol	Port size	Applicable series
N3	One-touch fitting for ø5/32"	SY3000
N7	One-touch fitting for ø1/4"	
N7	One-touch fitting for ø1/4"	SY5000
N9	One-touch fitting for ø5/16"	
N11	One-touch fitting for ø3/8"	SY7000

How to Order Valve Manifold Assembly (Example)

Example

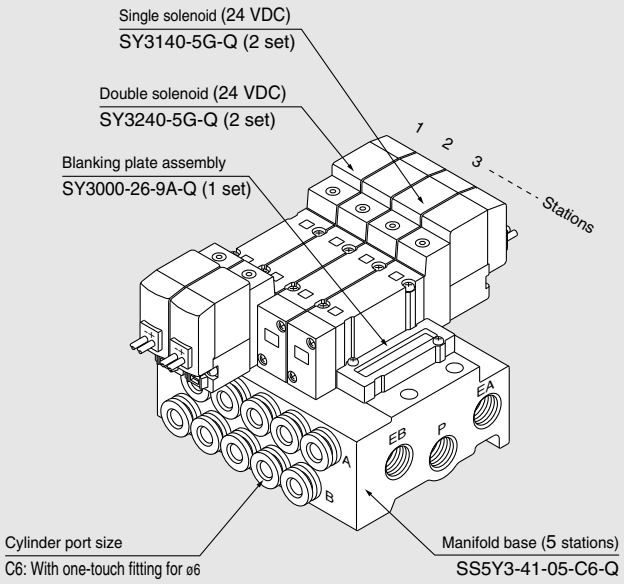

SS5Y3-41-05-C6-Q **1 set (Type 41, 5 stations manifold base part no.)**
∗ **SY3240-5G-Q** **2 sets (Double solenoid part no.)**
∗ **SY3140-5G-Q** **2 sets (Single solenoid part no.)**
∗ **SY3000-26-9A-Q** **1 set (Blanking plate assembly part no)**

→ The asterisk denotes the symbol for assembly.
Prefix it to the part nos. of the solenoid valve, etc.

Add the valve and option part number under the manifold base part number. In the case of complex arrangement, specify them on the manifold specification sheet.

How to Order Valve

SY 5 2 40 □ □ — 5 L □ □ □ -Q

Series

3	SY3000
5	SY5000
7	SY7000

Type of actuation

1	2 position single
2	2 position double
3	3 position closed center
4	3 position exhaust center
5	3 position pressure center

Pilot type

-	Internal pilot
R	External pilot

Coil specifications

-	Standard
T	With power saving circuit (24 VDC, 12 VDC only)

∗ Power saving circuit is not available in the case of D, DO or W□ type.

Rated voltage

For DC

5	24 VDC
6	12 VDC
V	6 VDC
S	5 VDC
R	3 VDC

For AC (50/60 Hz)

1	100 VAC
2	200 VAC
3	110 VAC [115 VAC]
4	220 VAC [230 VAC]

∗ DC specifications of Type D and DO is only available with 12 and 24 VDC.
∗ AC specification is only available with D and DO type.

Manual override

-	Non-locking push type
D	Push-turn locking slotted type
E	Push-turn locking lever type

Made to Order

—	—
X90	Main valve fluororubber

Light/surge voltage suppressor

Electrical entry for G, H, L, M, W

-	Without light/surge voltage suppressor
S	With surge voltage suppressor
Z	With light/surge voltage suppressor
R	With surge voltage suppressor (Non-polar type)
U	With light/surge voltage suppressor (Non-polar type)

∗ Power saving circuit is only available in the "Z" type.

Electrical entry for D (SY5000/7000 only)

-	Without light/surge voltage suppressor
S	With surge voltage suppressor (Non-polar type)
Z	With light/surge voltage suppressor (Non-polar type)

∗ DOZ is not available.
∗ For AC voltage valves there is no "S" option. It is already built-in to the rectifier circuit.

Electrical entry

24, 12, 6, 5, 3 VDC			24, 12 VDC/ 100, 110, 200, 220 VAC	24, 12, 6, 5, 3 VDC
Grommet	**L plug connector**	**M plug connector**	**DIN terminal** Note2	**M8 connector** ∗
G: Lead wire length 300 mm lead **H:** Lead wire length 600 mm	**L:** With lead wire (Length 300 mm) **LN:** Without lead wire **LO:** Without connector	**M:** With lead wire (Length 300 mm) **MN:** Without lead wire **MO:** Without connector	**D:** With connector **DO:** Without connector	**WO:** Without connector cable **W□:** With connector cable Note 1)

∗ LN, MN type: with 2 sockets.
∗ DIN terminal type "Y" which conforms to EN-175301-803C (former DIN43650C) is also available. For details, refer to page 227.
∗ For connector cable of M8 connector, refer to page 230.
∗ Connector M8 type "WA" conforming to IEC 60947-5-2 standard, is also available. For details, see page 211.
Note 1) Enter the cable length symbols in □. Please be sure to fill in the blank referring to back page 231.
Note 2) SY5000/7000 only.

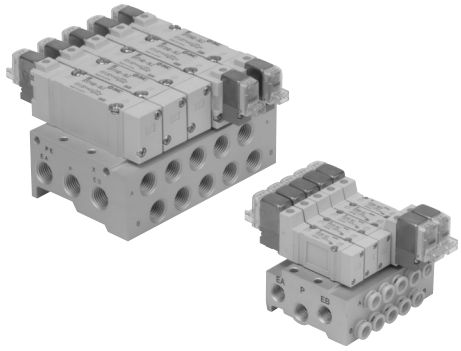

Manifold Specifications

Model		SS5Y3-41	SS5Y3-42	SS5Y5-41	SS5Y5-42	SS5Y7-42
Applicable valve		SY3□40		SY5□40		SY7□40
Manifold type		Single base/B mount				
P(SUP)/R(EXH)		Common SUP, Common EXH				
Valve stations		2 to 20 stations Note 1)				
A, B port Porting specifications	Location	Base				
	Direction	Side				
Port size	P, EA, EB port	1/8		1/4		1/4
	A, B port	M5, C4 (One-touch fitting for ø4) C6 (One-touch fitting for ø6)	1/8 C4 (One-touch fitting for ø4) C6 (One-touch fitting for ø6)	1/8 C6 (One-touch fitting for ø6) C8 (One-touch fitting for ø8)	1/4 C6 (One-touch fitting for ø6) C8 (One-touch fitting for ø8)	1/4 C10 (One-touch fitting for ø10)
Manifold base weight W (g) n: Stations		W = 30n + 50	W = 37n + 63	W = 61n + 101	W = 79n + 127	W = 100n + 151

Note 1) For more than 10 stations (more than 5 stations in case of SS5Y7), supply pressure to P port on both sides and exhaust from EA/EB port on both sides.

Note 2) Refer to "Manifold Option" on page 109.

Flow Characteristics

Model	Port size		Flow characteristics							
	1, 5, 3 (P, EA, EB)	4, 2 (A, B)	1 → 4/2 (P → A/B)				4/2 → 5/3 (A/B → EA/EB)			
			C (dm³/(s·bar))	b	Cv	Q[ℓ/min(ANR)]*	C (dm³/(s·bar))	b	Cv	Q[ℓ/min(ANR)]*
SS5Y3-41	1/8	C6	0.75	0.19	0.18	179	0.81	0.23	0.20	197
SS5Y3-42	1/8	C6	0.75	0.20	0.18	180	0.82	0.20	0.20	196
SS5Y5-41	1/4	C8	1.8	0.23	0.44	439	1.9	0.16	0.45	445
SS5Y5-42	1/4	C8	1.9	0.20	0.46	455	1.9	0.12	0.43	436
SS5Y7-42	1/4	C10	3.0	0.25	0.75	740	3.0	0.12	0.66	688

Note) The value is for manifold base with 5 stations and individually operated 2 position type.

* These values have been calculated according to ISO6358 and represent the flow rate measured in standard conditions at an upstream pressure of 0.6 MPa (relative pressure) and a differential pressure of 0.1MPa.

SY3000: SS5Y3-41-[Stations]-M5, C4,N3 C6,N7 [ ] -Q

Grommet (G) **With interface regulator (with gauge)**

For M5

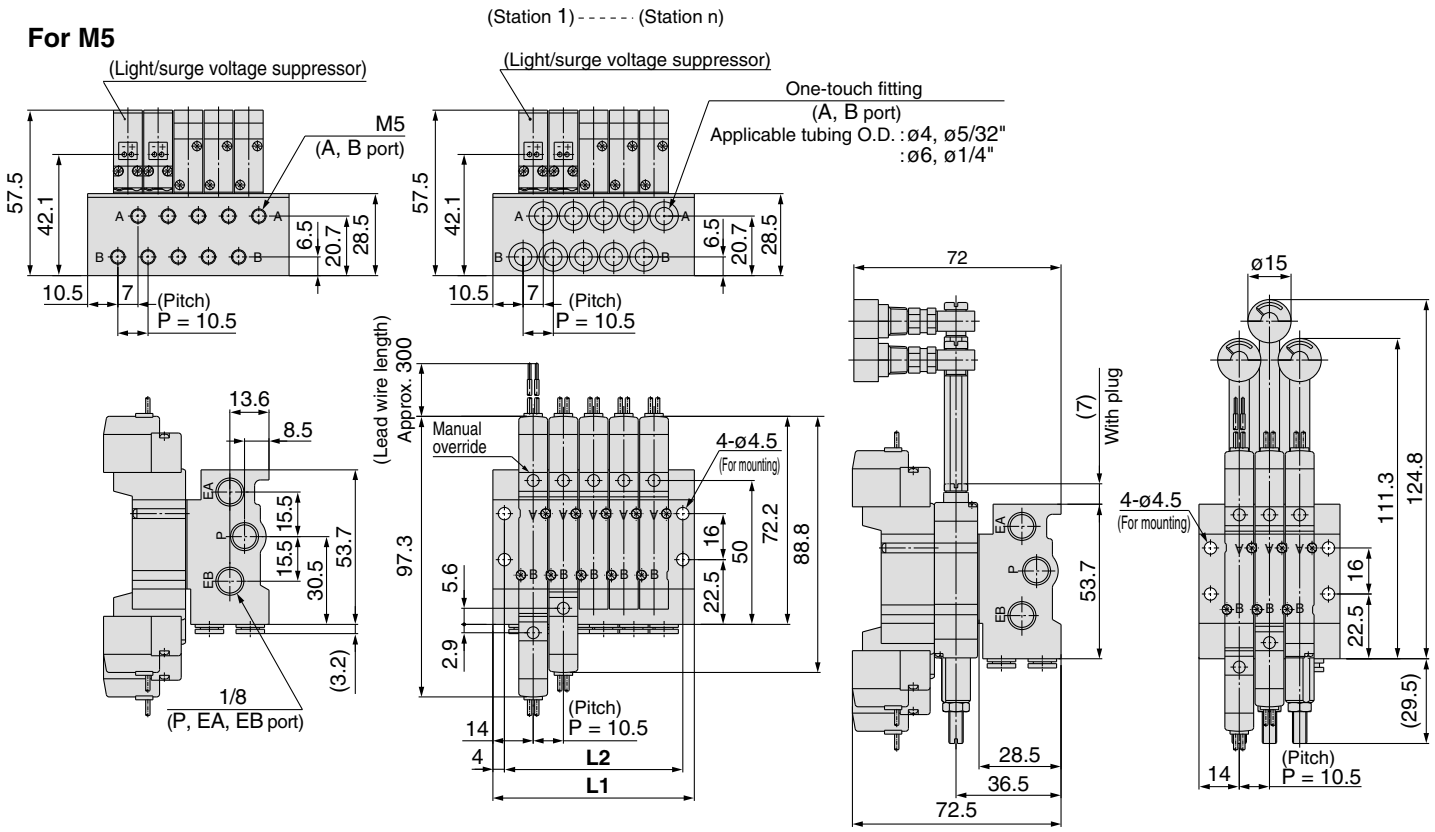

L plug connector (L)

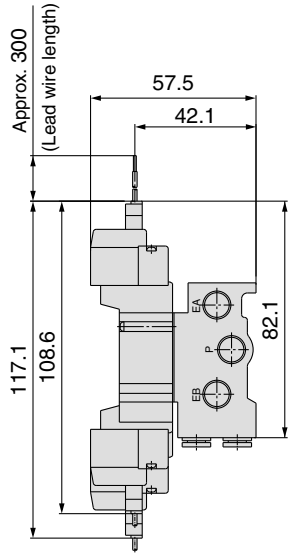

M plug connector (M)

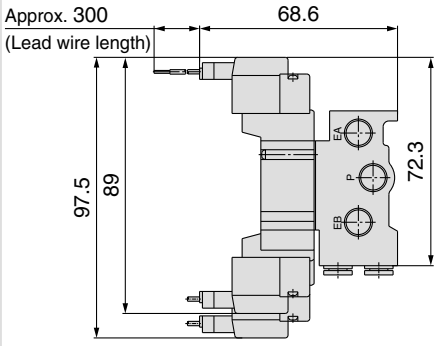

M8 connector (WO)

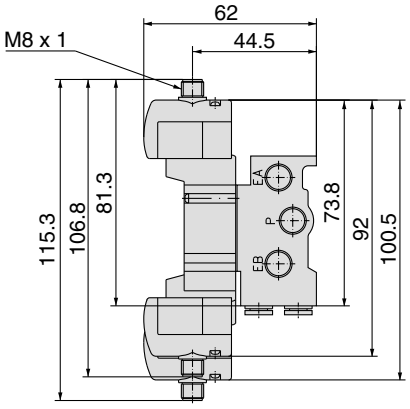

Note) Refer to back page 12 for dimensions of connector types.

Stations n	2 stations	3	4	5	6	7	8	9	10	11	12	13	14	15	16	17	18	19	20 stations
L1	38.5	49	59.5	70	80.5	91	101.5	112	122.5	133	143.5	154	164.5	175	185.5	196	206.5	217	227.5
L2	30.5	41	51.5	62	72.5	83	93.5	104	114.5	125	135.5	146	156.5	167	177.5	188	198.5	209	219.5

SY5000: SS5Y5-41-Stations-01, C6, N7 / C8, N9 □-Q

Grommet (G)

For 1/8

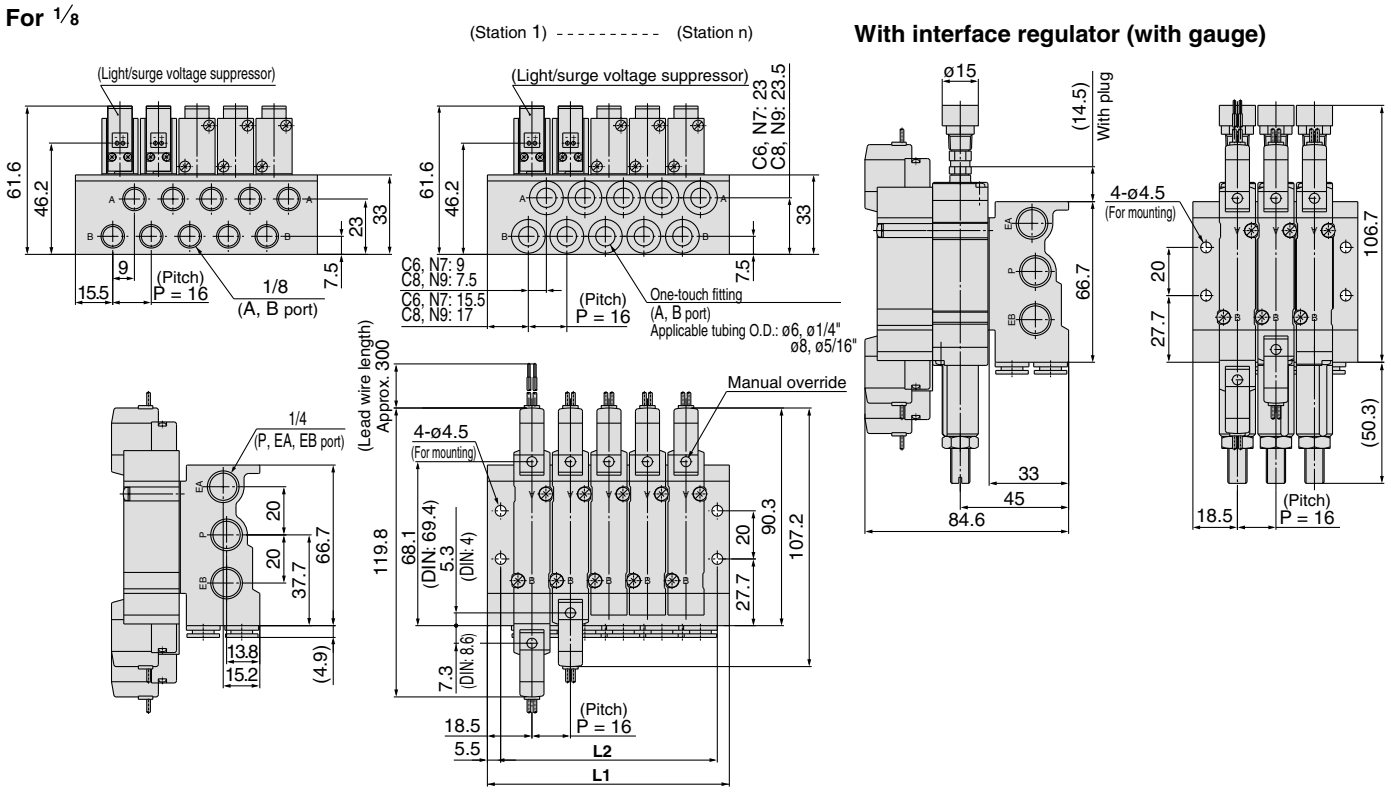

L plug connector: L **M plug connector: M** **DIN terminal (D)** **M8 connector (WO)**

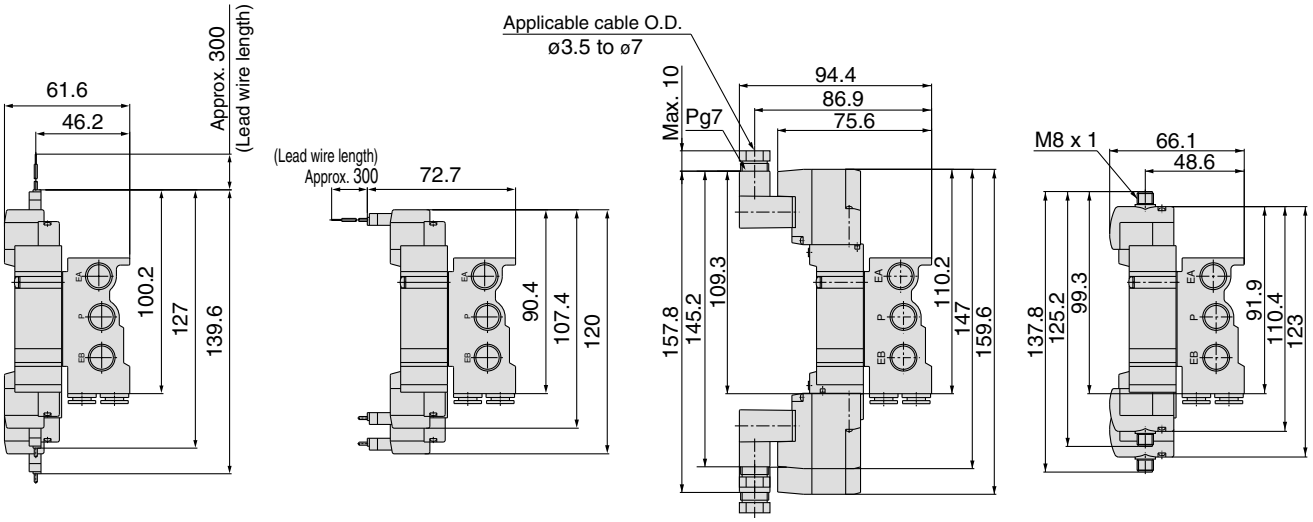

Note) Refer to back page 12 for dimensions of connector types.

Stations n	2 stations	3	4	5	6	7	8	9	10	11	12	13	14	15	16	17	18	19	20 stations
L1	52.5	68.5	84.5	100.5	116.5	132.5	148.5	164.5	180.5	196.5	212.5	228.5	244.5	260.5	276.5	292.5	308.5	324.5	340.5
L2	42	58	74	90	106	122	138	154	170	186	202	218	234	250	266	282	298	314	330

SY3000: SS5Y3-42-[Stations]-[C4, N3 / C6, N7][ ]-Q

Grommet (G)

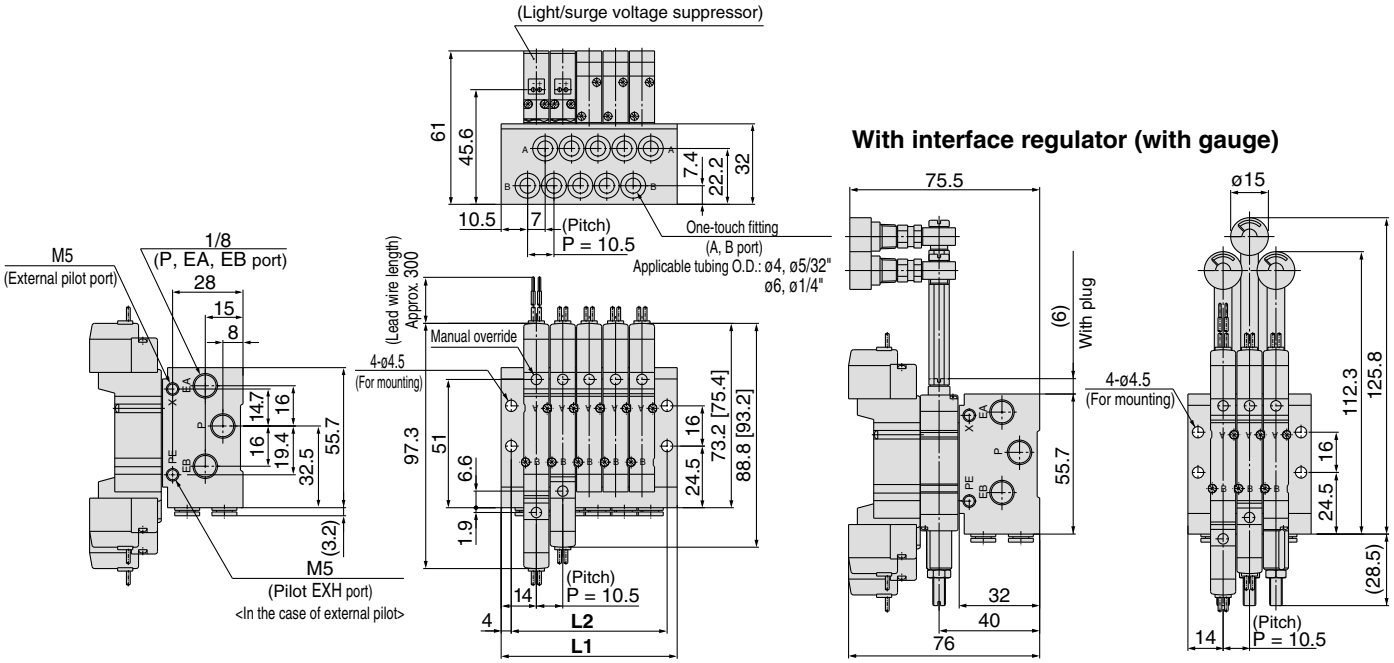

L plug connector (L)

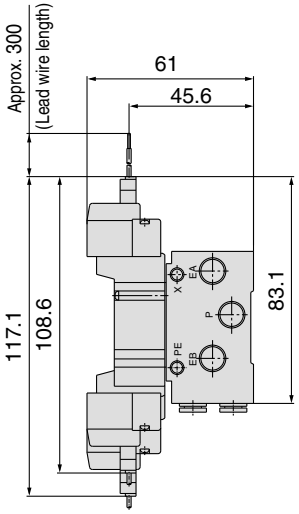

M plug connector (M)

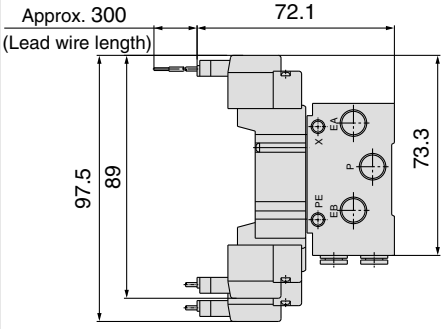

M8 connector (WO)

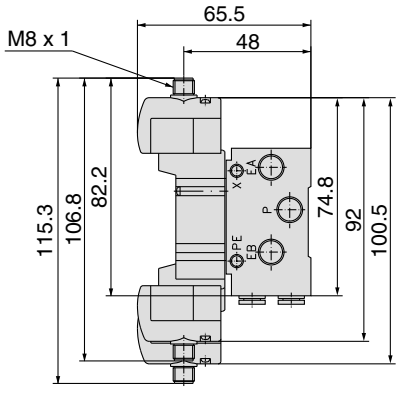

Note) Refer to back page 12 for dimensions of connector types.

Stations n	2 stations	3	4	5	6	7	8	9	10	11	12	13	14	15	16	17	18	19	20 stations
L1	38.5	49	59.5	70	80.5	91	101.5	112	122.5	133	143.5	154	164.5	175	185.5	196	206.5	217	227.5
L2	30.5	41	51.5	62	72.5	83	93.5	104	114.5	125	135.5	146	156.5	167	177.5	188	198.5	209	219.5

SY3000: SS5Y3-42-[Stations]-01[ ]-Q

Grommet (G)

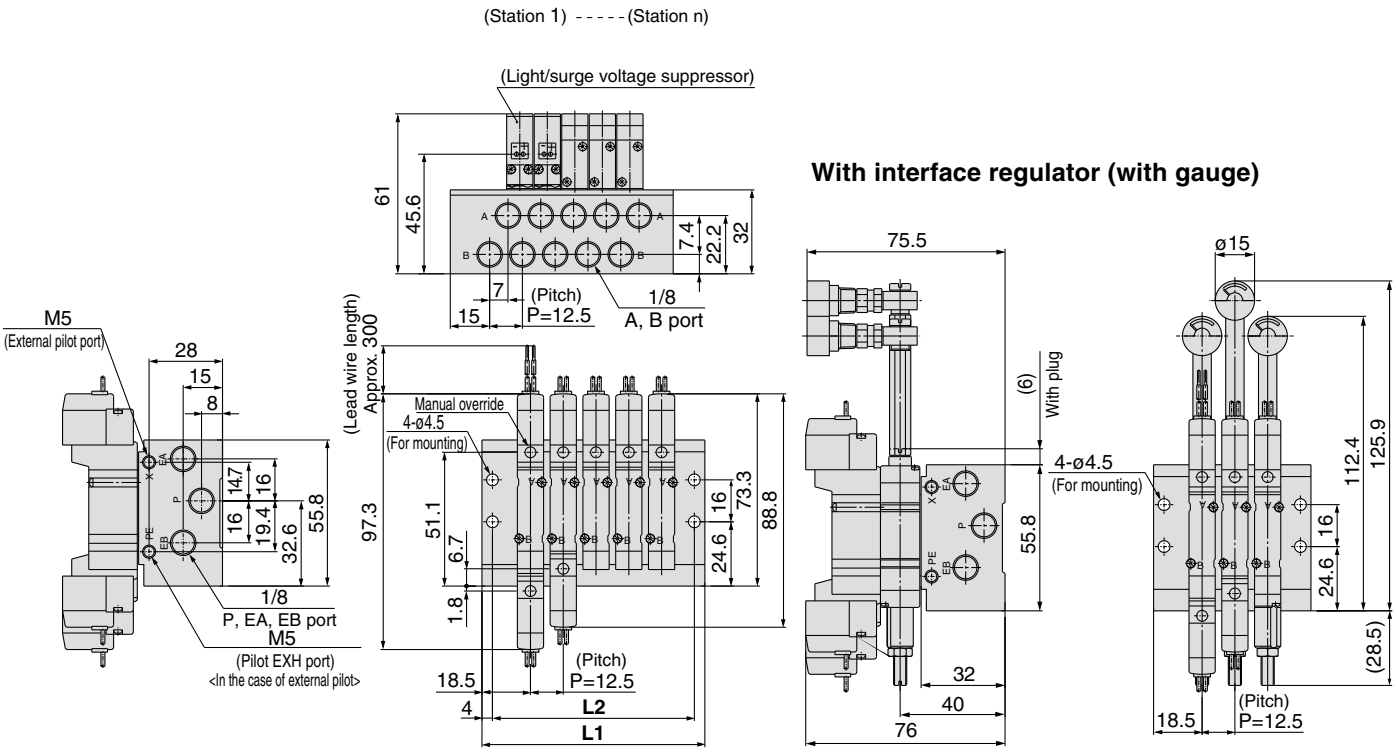

L plug connector (L)

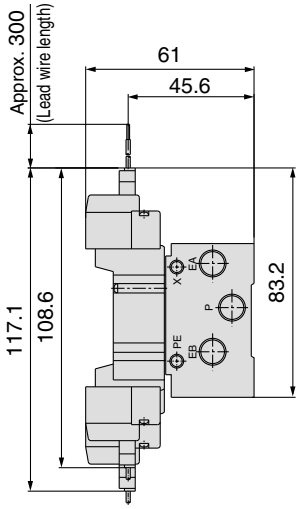

M plug connector (M)

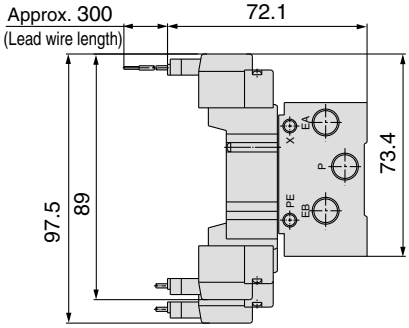

M8 connector (WO)

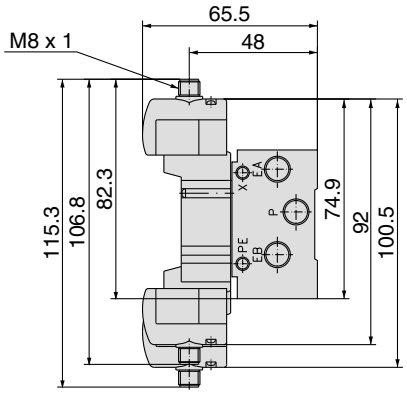

Note) Refer to back page 12 for dimensions of connector types.

Stations n	2 stations	3	4	5	6	7	8	9	10	11	12	13	14	15	16	17	18	19	20 stations
L1	47.5	60	72.5	85	97.5	110	122.5	135	147.5	160	172.5	185	197.5	210	222.5	235	247.5	260	272.5
L2	39.5	52	64.5	77	89.5	102	114.5	127	139.5	152	164.5	177	189.5	202	214.5	227	239.5	252	264.5

SY5000: SS5Y5-42-[Stations]-[C4, N3 / C6, N7][ ]-Q

Grommet (G)

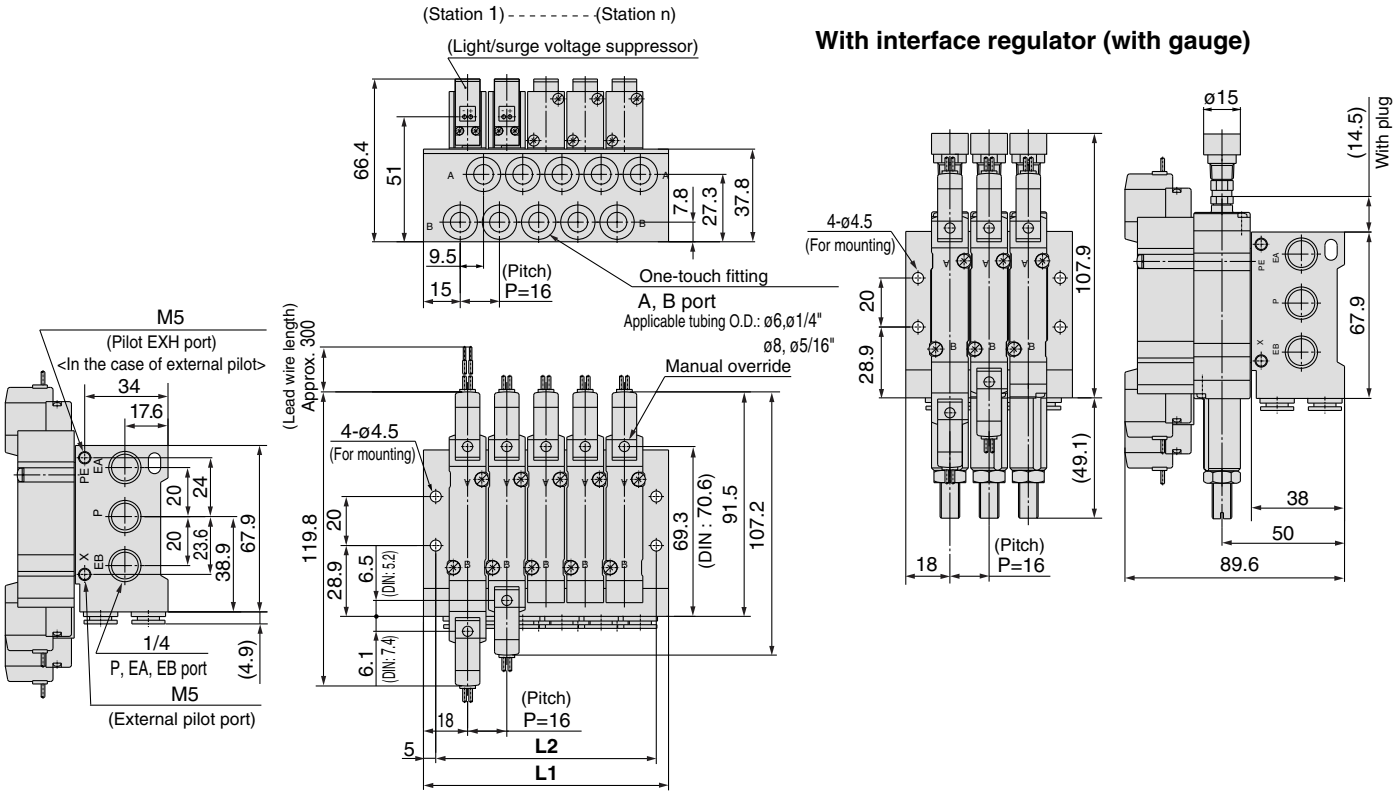

L plug connector (L) **M plug connector (M)** **DIN terminal (D)** **M8 connector (WO)**

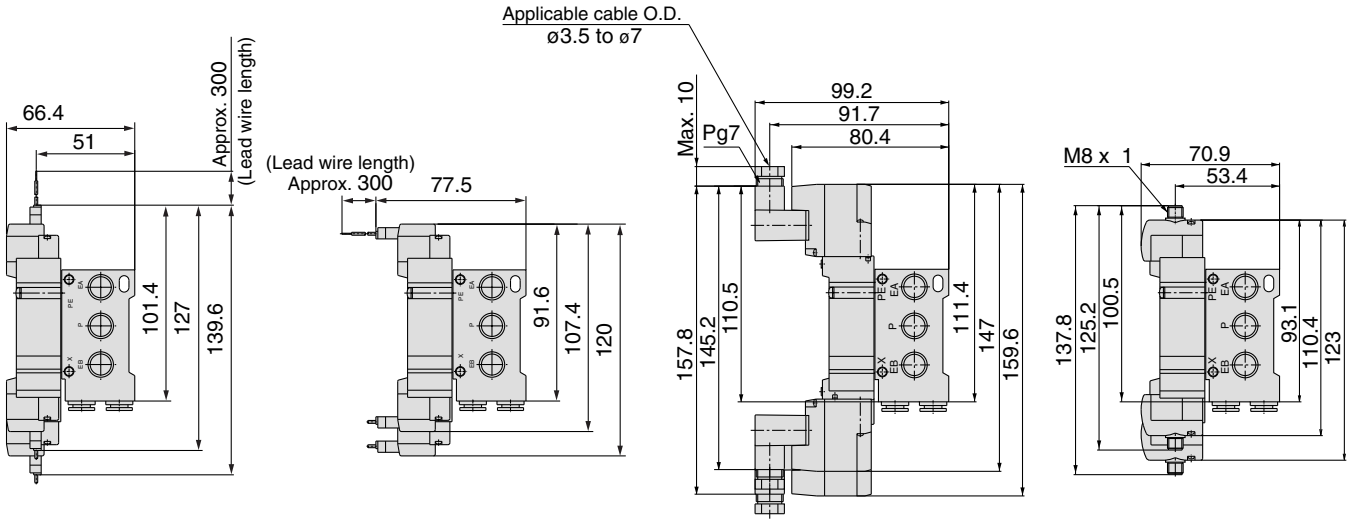

Note) Refer to back page 12 for dimensions of connector types.

Stations n	2 stations	3	4	5	6	7	8	9	10	11	12	13	14	15	16	17	18	19	20 stations
L1	52	68	84	100	116	132	148	164	180	196	212	228	244	260	276	292	308	324	340
L2	42	58	74	90	106	122	138	154	170	186	202	218	234	250	266	282	298	314	330

SY5000: SS5Y5-42-Stations-02□-Q

Grommet (G)

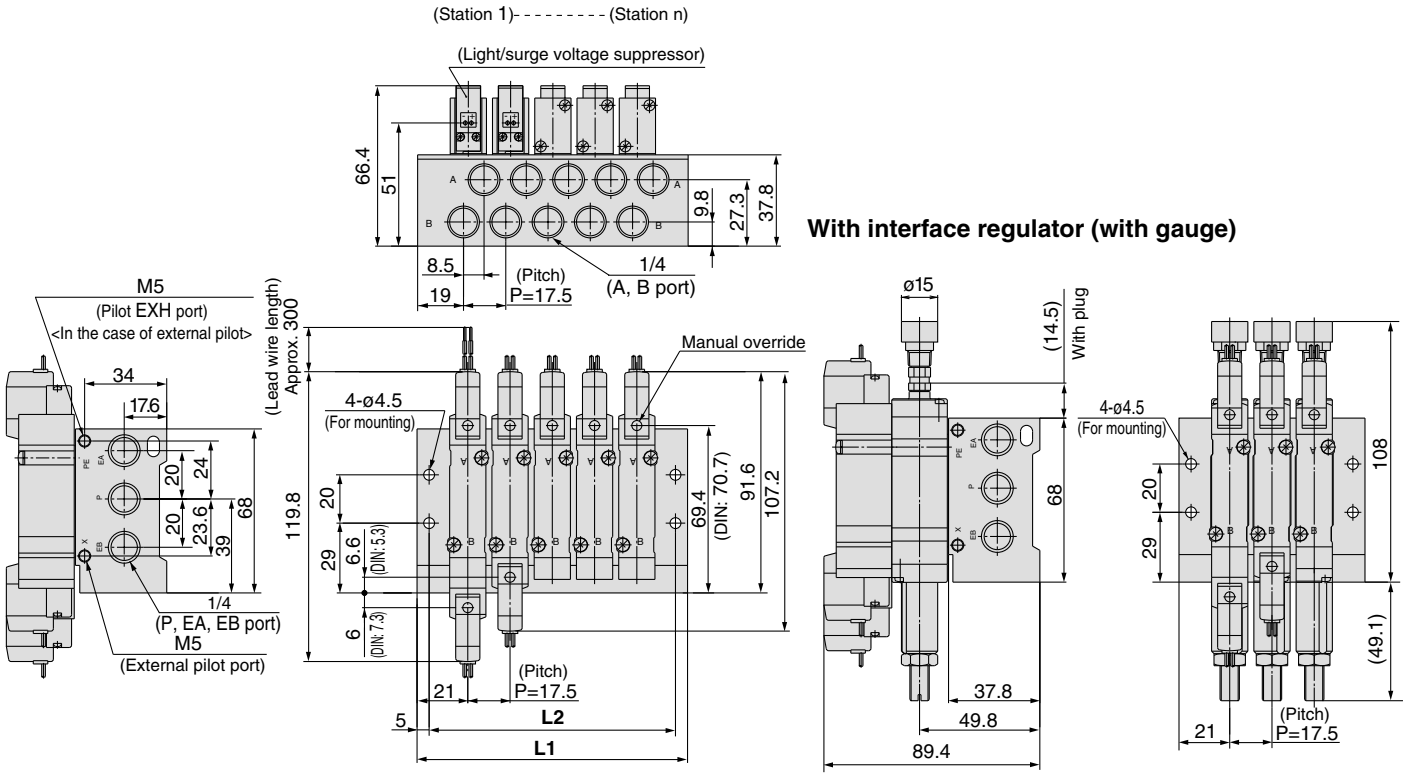

L plug connector (L) M plug connector (M) DIN terminal (D) M8 connector (WO)

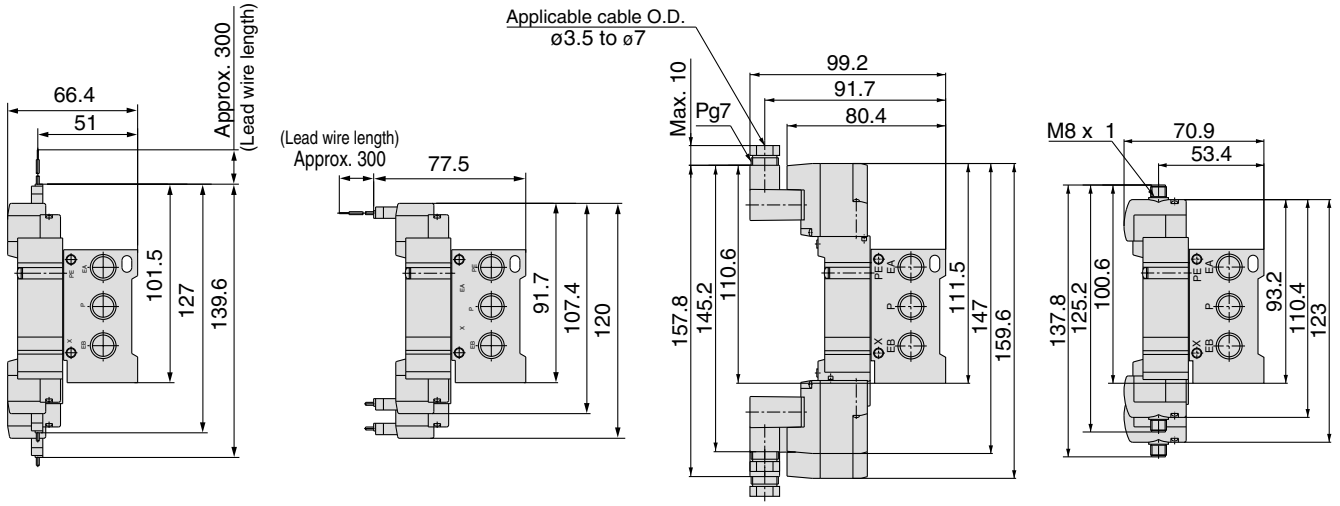

Note) Refer to back page 12 for dimensions of connector types.

Stations n	2 stations	3	4	5	6	7	8	9	10	11	12	13	14	15	16	17	18	19	20 stations
L1	59.5	77	94.5	112	129.5	147	164.5	182	199.5	217	234.5	252	269.5	287	304.5	322	339.5	357	374.5
L2	49.5	67	84.5	102	119.5	137	154.5	172	189.5	207	224.5	242	259.5	277	294.5	312	329.5	347	364.5

SY7000: SS5Y7-42-[Stations]-02, C10, N11[ ]-Q

Grommet (G)

(Station 1)- - - - - - - - - (Station n)

For 1/4

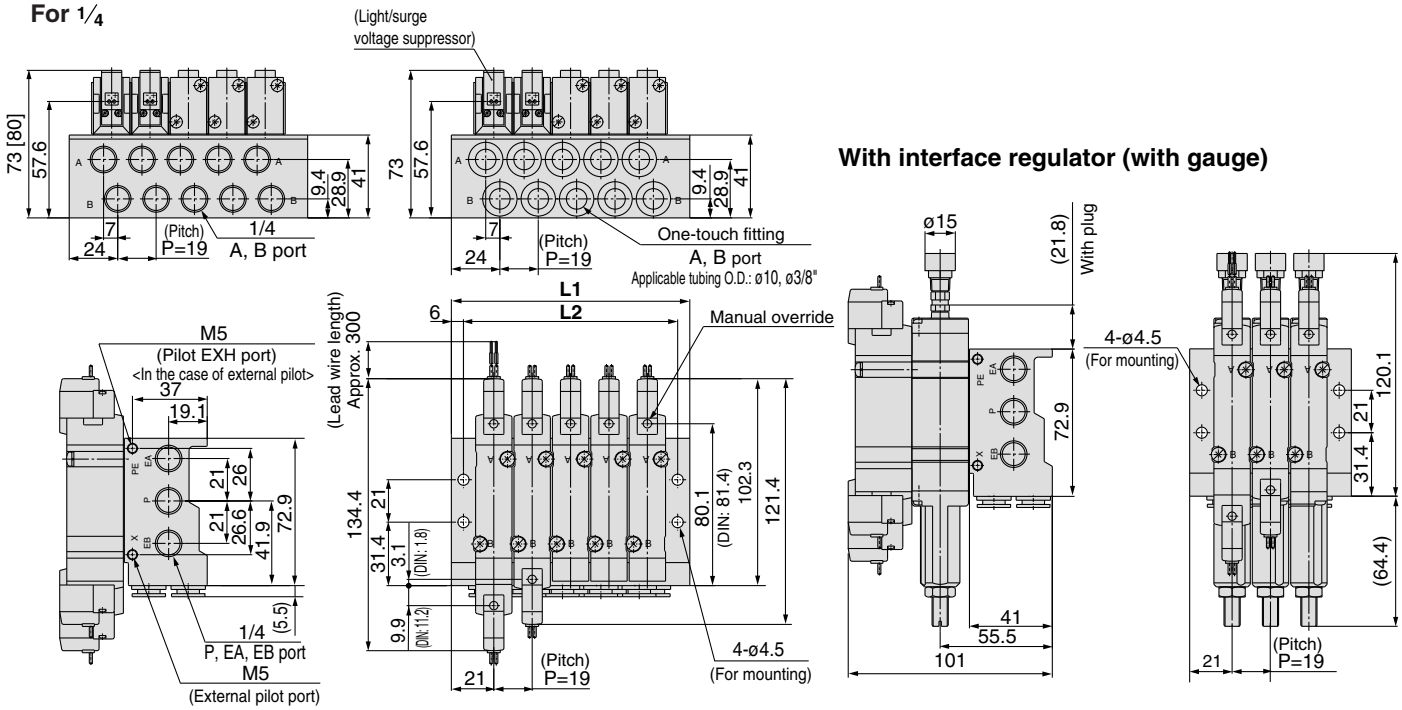

L plug connector (L)

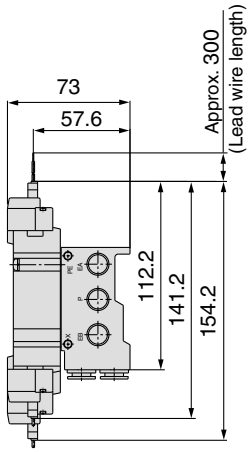

M plug connector (M)

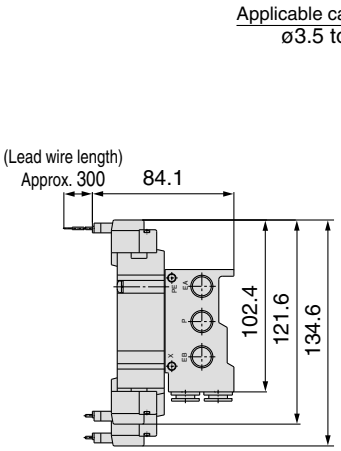

DIN terminal (D)

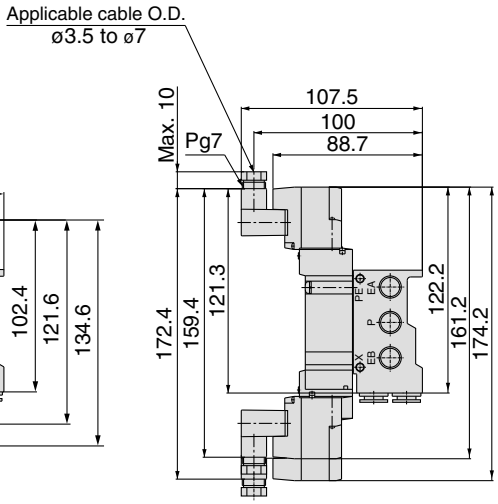

M8 connector (WO)

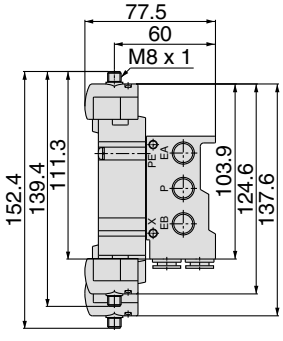

Note) Refer to back page 12 for dimensions of connector types.

Stations n	2 stations	3	4	5	6	7	8	9	10	11	12	13	14	15	16	17	18	19	20 stations
L1	61	80	99	118	137	156	175	194	213	232	251	270	289	308	327	346	365	384	403
L2	49	68	87	106	125	144	163	182	201	220	239	258	277	296	315	334	353	372	391

5 Port Solenoid Valve
Series SY9000
Base Mounted
Stacking Type/Individual Wiring

Type 43

How to Order Manifold

SS5Y9 – 43 – 05 U [ ] – C8 [ ] – [ ] -Q

Manifold series

9	SY9000

Valve stations

Symbol	Stations
02	2 stations
⋮	⋮
20	20 stations

∗ This also includes the number of blanking plate assemblies.

P, R port outlets

Symbol	Port outlet	Applicable stations
U	U side	2 to 10 stations
D	D side	
B	Both sides	2 to 20 stations

SUP/EXH block assembly specifications

Symbol	Specifications
-	Standard/Internal pilot specification
R	External pilot specification
S	Internal pilot/Built-in silencer
RS	External pilot/Built-in silencer

Thread type

-	Rc
F	G
N	NPT
T	NPTF

Option

Symbol	Mounting
-	Direct mounting
D	DIN rail mounting (with DIN rail)
DO	DIN rail mounting (without DIN rail)
D∗	When a longer DIN rail is desired than the specified stations, specify the station number to be required into ∗ mark.

A, B port size

Thread piping

Symbol	Port size
02	1/4
03	3/8

One-touch fitting (Metric size)

Symbol	Port size
C8	One-touch fitting for ø8
C10	One-touch fitting for ø10
C12	One-touch fitting for ø12
M	Mixed

One-touch fitting (Inch size)

Symbol	Port size
N9	One-touch fitting for ø5/16"
N11	One-touch fitting for ø3/8"
M	Mixed

∗ In the case of mixed specifications (M), indicate separately on the manifold specification sheet.

How to Order Valve Manifold Assembly (Example)

Example

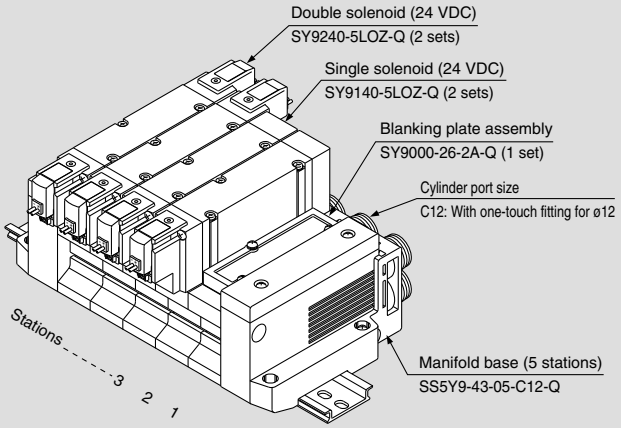

SS5Y9-43-05B-C12-Q 1 set (Type 43, 5 station manifold base part no.)
∗ **SY9000-26-2A-Q 1 set (Blanking plate assembly part no.)**
∗ **SY9140-5LOZ-Q 2 sets (Single solenoid part no.)**
∗ **SY9220-5LOZ-Q 2 sets (Double solenoid part no.)**

The asterisk denotes the symbol for assembly.
Prefix it to the part nos. of the solenoid valve, etc.

Add the valve and option part number under the manifold base part number. In the case of complex arrangement, specify them on the manifold specification sheet.

How to Order Valve

SY 9 2 40 □ □ — 5 L □ □ □ -Q

Series

9	SY9000

Type of actuation

1	2 position single
2	2 position double
3	3 position closed center
4	3 position exhaust center
5	3 position pressure center

Pilot type

Nil	Internal pilot
R	External pilot

Coil specifications

Nil	Standard
T	With power saving circuit (24, 12 VDC only)

∗ Power saving circuit is not available in the case of D, DO or W□ type.

Rated voltage

For DC

5	24 VDC
6	12 VDC
V	6 VDC
S	5 VDC
R	3 VDC

For AC (50/60 Hz)

1	100 VAC
2	200 VAC
3	110 VAC [115 VAC]
4	220 VAC [230 VAC]

∗ DC specifications of Type D and DO is only available with 12 and 24 VDC.
∗ AC specification is only available with D and DO type.

Light/surge voltage suppressor

Electrical entry for G, H, L, M, W

-	Without light/surge voltage suppressor
S	With surge voltage suppressor
Z	With indicator light and surge voltage suppressor
R	With surge voltage suppressor (Non-polar type)
U	With light/surge voltage suppressor (Non-polar type)

∗ Power saving circuit is only available in the "Z" type.

Electrical entry for D

-	Without light/surge voltage suppressor
S	With surge voltage suppressor (Non-polar type)
Z	With light/surge voltage suppressor (Non-polar type)

∗ DOZ is not available.
∗ For AC voltage valves there is no "S" option. It is already built-in to the rectifier circuit.

Manual override

-	Non-locking push type
D	Push-turn locking slotted type
E	Push-turn locking lever type

Made to Order

—	—
X90	Main valve fluororubber

Electrical entry

24, 12, 6, 5, 3 VDC			24, 12 VDC/ 100, 110, 200, 220 VAC	24, 12, 6, 5, 3 VDC
Grommet	**L plug connector**	**M plug connector**	**DIN terminal**	**M8 connector** ∗
G: Lead wire length 300 mm **H:** Lead wire length 600 mm	**L:** With lead wire (Length 300 mm) **LN:** Without lead wire **LO:** Without connector	**M:** With lead wire (Length 300 mm) **MN:** Without lead wire **MO:** Without connector	**D:** With connector **DO:** Without connector	**WO:** Without connector cable **W□:** With connector cable Note 1)

∗ LN, MN type: with 2 sockets.
∗ DIN terminal type "Y" which conforms to EN-175301-803C (former DIN43650C) is also available. For details, refer to page 227.
∗ For connector cable of M8 connector, refer to page 230.
∗ Connector M8 type "WA" conforming to IEC 60947-5-2 standard, is also available. For details, see page 211.
Note 1) Enter the cable length symbols in □. Please be sure to fill in the blank referring to page 231.

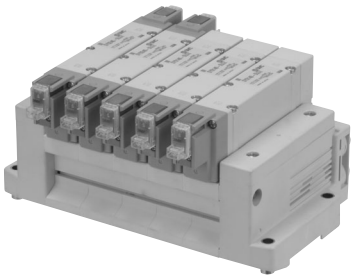

Manifold Specifications

Model			SS5Y9-43
Applicable valve			SY9□40
Manifold type			Stacking type
P(SUP)/R(EXH)			Common SUP, Common EXH
Valve stations			2 to 20 stations (1)
A, B port Porting specifications		Location	Base
		Direction	Side
Port size	P, EA, EB port		C12 (One-touch fitting for ø12)
	A, B port		1/4 3/8 C8 (One-touch fitting for ø8) C10 (One-touch fitting for ø10) C12 (One-touch fitting for ø12)
Manifold base weight W (g), n: Stations			W = 107n + 330

Note 1) For more than 10 stations, supply pressure to P port on both sides and exhaust from EA/EB port on both sides.
Note 2) Refer to “Manifold Option” on page 109.

Flow Characteristics

Model	Port size		Flow characteristics							
	1, 5, 3 (P, EA, EB)	4, 2 (A, B)	1→4/2 (P→A/B)				4/2→5/3 (A/B→EA/EB)			
			C (dm³/(s·bar))	b	Cv	Q[ℓ/min(ANR)]*	C (dm³/(s·bar))	b	Cv	Q[ℓ/min(ANR)]*
SS5Y9-43	C12	C12	6.4	0.29	1.6	1617	7.3	0.29	1.8	1845

Note) The value is for manifold base with 5 stations and individually operated 2 position type.

* These values have been calculated according to ISO6358 and represent the flow rate measured in standard conditions at an upstream pressure of 0.6 MPa (relative pressure) and a differential pressure of 0.1MPa.

SY9000: SS5Y9-43- Stations D □ - 02, C8, N9 / 03, C12, N11 □ (-D)-Q

Grommet (G)

Stations n	2 stations	3	4	5	6	7	8	9	10 stations
L1	148	173	198	223	248	260.5	285.5	310.5	335.5
L2	137.5	162.5	187.5	212.5	237.5	250	275	300	325
L3	117	141	165	189	213	237	261	285	309
L4	15.5	16	16.5	17	17.5	12	12.5	13	13.5
L5	103	127	151	175	199	223	247	271	295

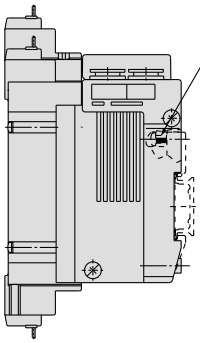

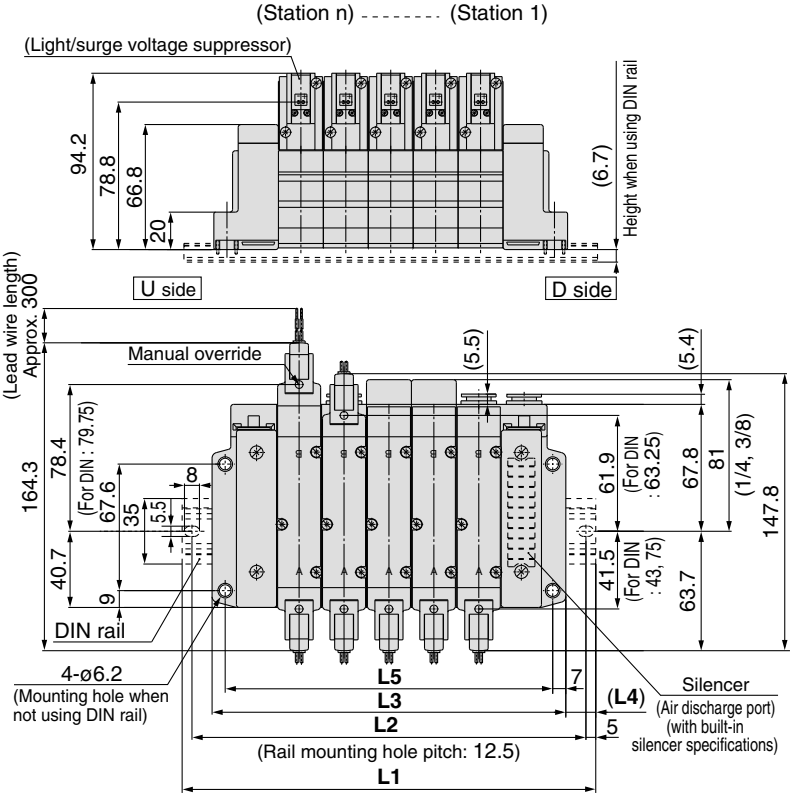

∗ When P, R port outlets are indicated on the D side, the P, R ports on the opposite side are plugged.

With External Pilot Specifications

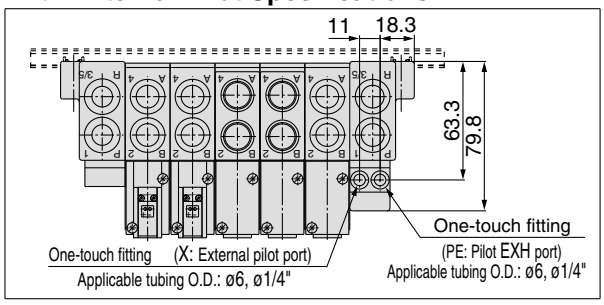

∗ Air discharge port on the built-in silencer type and the external pilot's extracting position are in the D side.

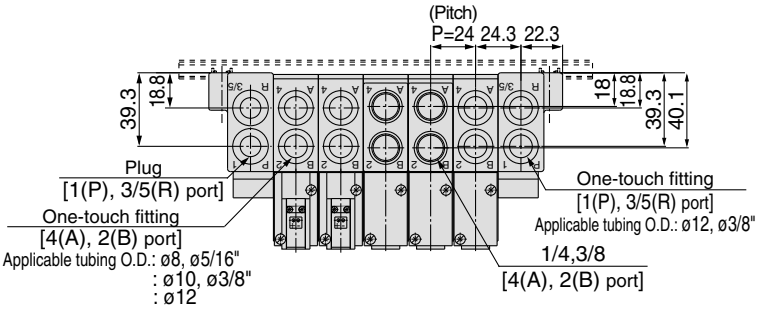

L plug connector (L)

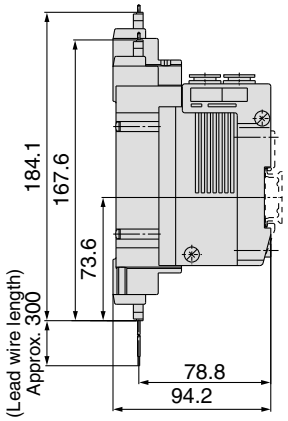

M plug connector (M)

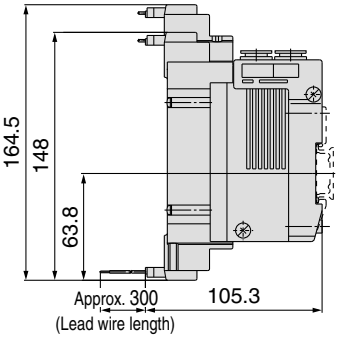

DIN terminal (D)

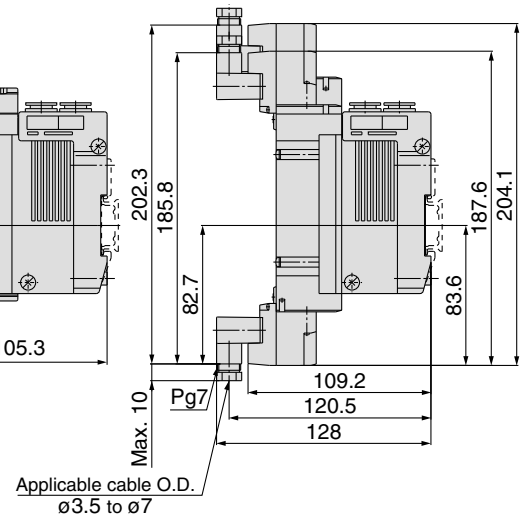

M8 connector (WO)

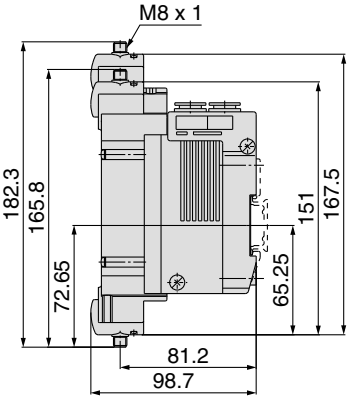

Note) Refer to back page 12 for dimensions of connector types.

SY9000: SS5Y9-43- Stations U □ -02, C9, N9 / 03, C10, N11, C12 □ (-D)-Q

Grommet (G)

Stations n	2 stations	3	4	5	6	7	8	9	10 stations
L1	148	173	198	223	248	260.5	285.5	310.5	335.5
L2	137.5	162.5	187.5	212.5	237.5	250	275	300	325
L3	117	141	165	189	213	237	261	285	309
L4	15.5	16	16.5	17	17.5	12	12.5	13	13.5
L5	103	127	151	175	199	223	247	271	295

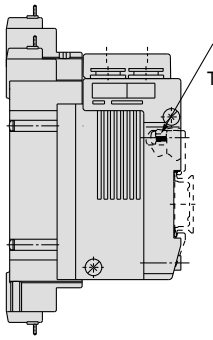



∗ When P, R port outlets are indicated on the U side, the P, R ports on the opposite side are plugged.

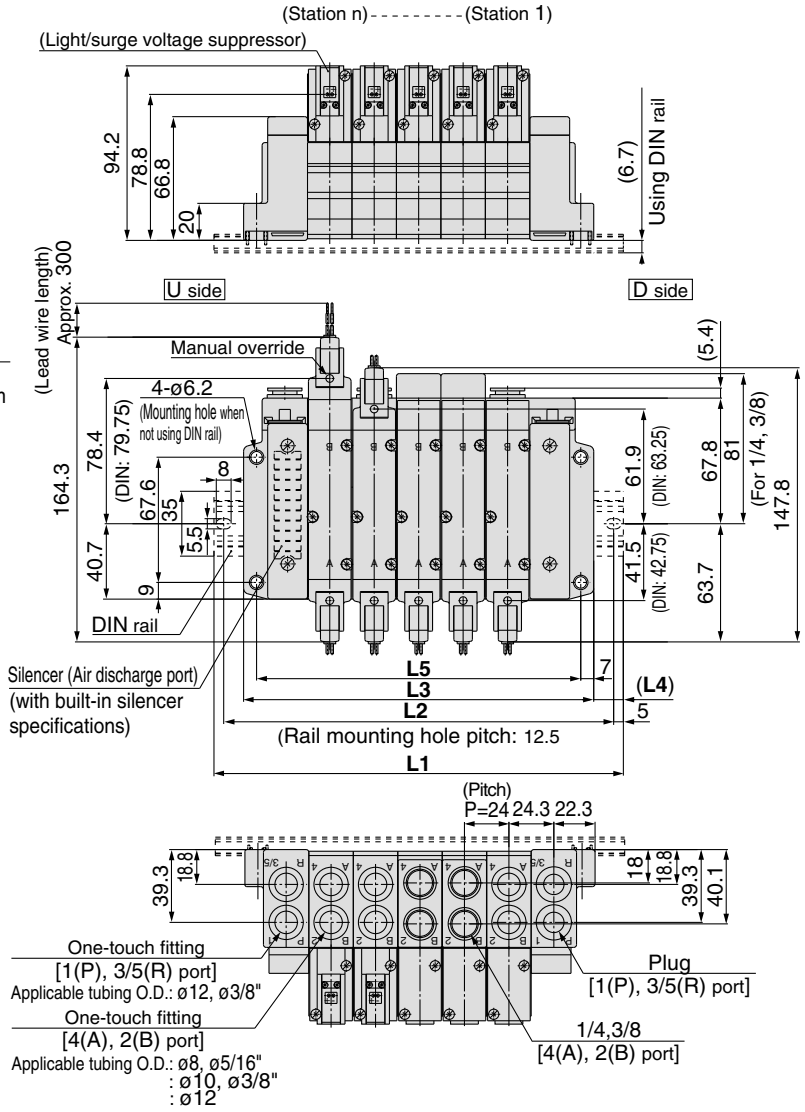

With External Pilot Specifications

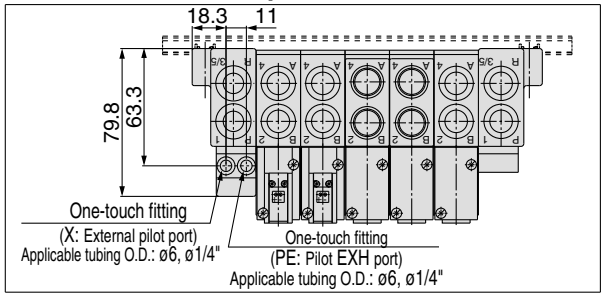

∗ Air discharge port on the built-in silencer type and the external pilot's extracting position are in the D side.

L plug connector (L)

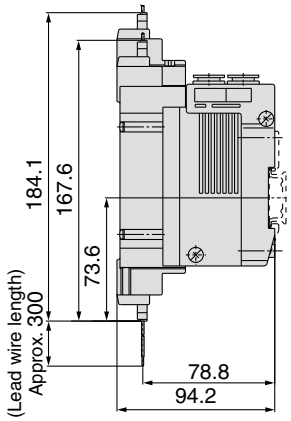

M plug connector (M)

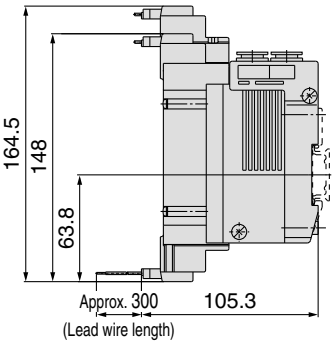

DIN terminal (D)

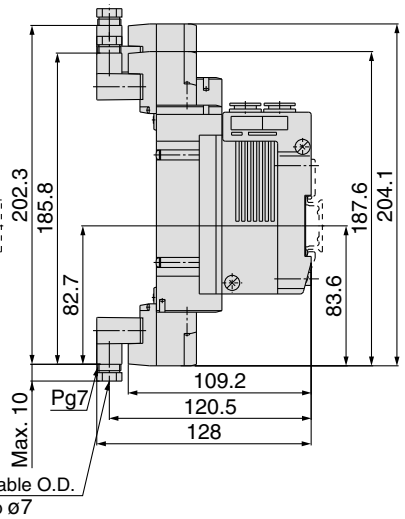

M8 connector (WO)

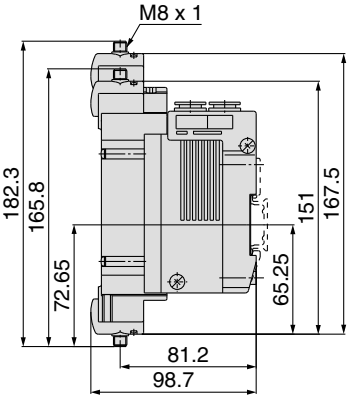

Note) Refer to back page 12 for dimensions of connector types.

SY9000: SS5Y9-43- Stations B □ - 02, C8, N9 / 03, C10, N11 / C12 □ (-D)-Q

Grommet (G)

Stations n	2 stations	3	4	5	6	7	8	9	10 stations
L1	148	173	198	223	248	260.5	285.5	310.5	335.5
L2	137.5	162.5	187.5	212.5	237.5	250	275	300	325
L3	117	141	165	189	213	237	261	285	309
L4	15.5	16	16.5	17	17.5	12	12.5	13	13.5
L5	103	127	151	175	199	223	247	271	295

Stations n	11 stations	12	13	14	15	16	17	18	19	20 stations
L1	360.5	385.5	410.5	435.5	460.5	485.5	510.5	535.5	560.5	573
L2	350	375	400	425	450	475	500	525	550	562.5
L3	333	357	381	405	429	453	477	501	525	549
L4	14	14.5	15	15.5	16	16.5	17	17.5	18	12
L5	319	343	367	391	415	439	463	487	511	535

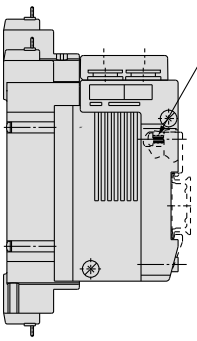

∗ When P, R port outlets are indicated on the B side, the P, R ports on the both sides are in the open state.

With External Pilot Specifications

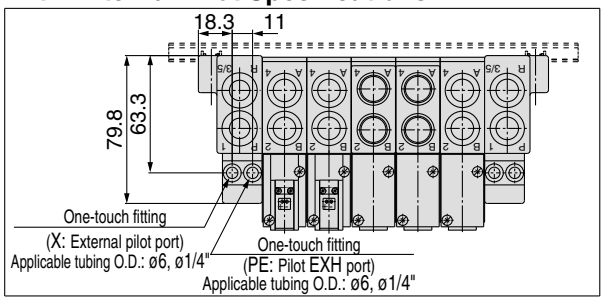

∗ Air discharge port on the built-in silencer type and the external pilot's extracting position are in the B side (both sides).

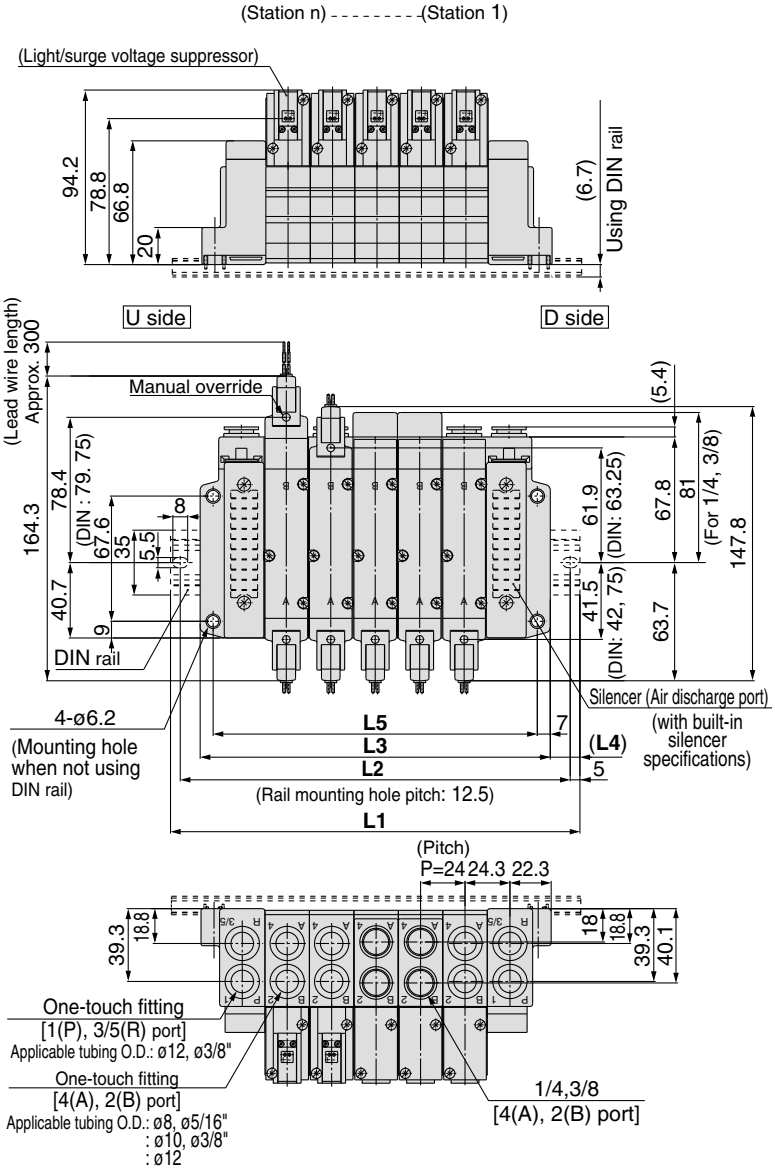

L plug connector (L)

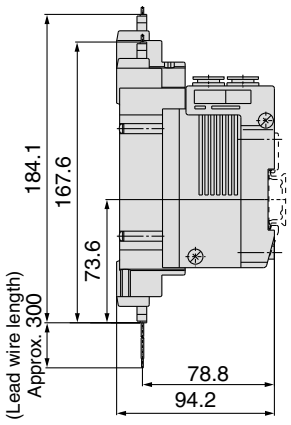

M plug connector (M)

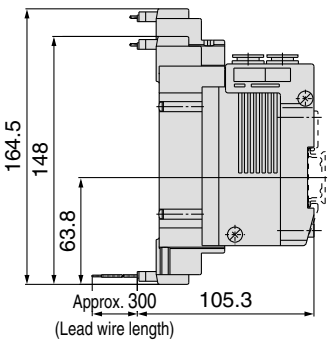

DIN terminal (D)

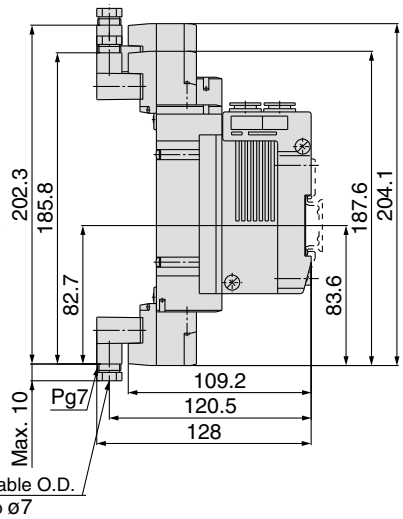

M8 connector (WO)

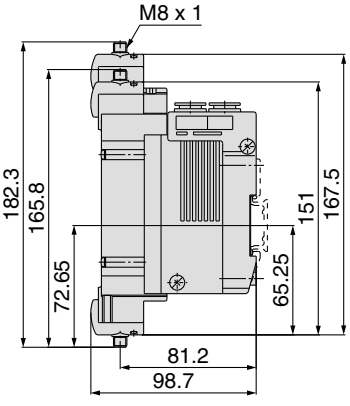

Note) Refer to back page 12 for dimensions of connector types.

Type 41P
Type 42P

5 Port Solenoid Valve
Series SY3000/5000/7000
Base Mounted
Bar Stock Type/Flat Ribbon Cable

How to Order Manifold

Type 41P/Compact style

SS5Y 5 — 41P — 05 — C8 ☐ -Q

Manifold series

3	SY3000
5	SY5000

Stations

03	3 stations
⋮	⋮
12	12 stations

∗ SS5Y3 has 4 to 12 stations.

Thread type

-	Rc
F	G
N	NPT
T	NPTF

∗ Except for M5

A, B port size

Thread piping

Symbol	Port size	Applicable series
M5	M5	SY3000
01	1/8	SY5000

One-touch fitting (Metric size)

Symbol	Port size	Applicable series
C4	One-touch fitting for ø4	SY3000
C6	One-touch fitting for ø6	
C6	One-touch fitting for ø6	SY5000
C8	One-touch fitting for ø8	

One-touch fitting (Inch size)

Symbol	Port size	Applicable series
N3	One-touch fitting for ø5/32"	SY3000
N7	One-touch fitting for ø1/4"	
N7	One-touch fitting for ø1/4"	SY5000
N9	One-touch fitting for ø5/16"	

Type 42P/Common external pilot

SS5Y 5 — 42P — 05 — C8 ☐ -Q

Manifold series

3	SY3000
5	SY5000
7	SY7000

Stations

03	3 stations
⋮	⋮
12	12 stations

∗ SS5Y3 has 4 to 12 stations.

Thread type

-	Rc
F	G
N	NPT
T	NPTF

A, B port size

Thread piping

Symbol	Port size	Applicable series
01	1/8	SY3000
02	1/4	SY5000
02	1/4	SY7000

One-touch fitting (Metric size)

Symbol	Port size	Applicable series
C4	One-touch fitting for ø4	SY3000
C6	One-touch fitting for ø6	
C6	One-touch fitting for ø6	SY5000
C8	One-touch fitting for ø8	
C10	One-touch fitting for ø10	SY7000

One-touch fitting (Inch size)

Symbol	Port size	Applicable series
N3	One-touch fitting for ø5/32"	SY3000
N7	One-touch fitting for ø1/4"	
N7	One-touch fitting for ø1/4"	SY5000
N9	One-touch fitting for ø5/16"	
N9	One-touch fitting for ø5/16"	SY7000

How to Order Valve Manifold Assembly (Example)

Example

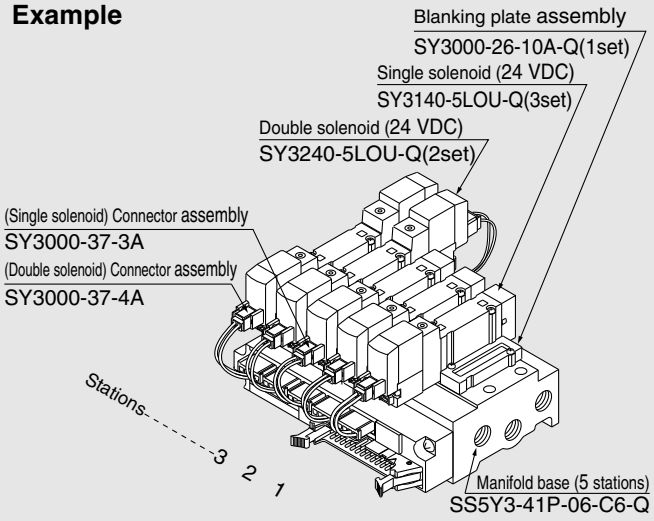

SS5Y3-41P-06-C6-Q **1 set (Type 41, 6 stations manifold base part no.)**
∗ **SX3000-26-10A-Q** **1 set (Blanking plate assembly part no)**
∗ **SY3140-5LOU-Q** **3 sets (Single solenoid part no.)**
∗ **SY3240-5LOU-Q** **2 sets (Double solenoid part no.)**
∗ **SY3000-37-3A** **3 sets (Connector assembly part no.)**
∗ **SY3000-37-4A** **2 sets (Connector assembly part no.)**

→ The asterisk denotes the symbol for assembly.
Prefix it to the part nos. of the solenoid valve, etc.

Add the valve and option part number under the manifold base part number. In the case of complex arrangement, specify them on the manifold specification sheet.

How to Order Valve

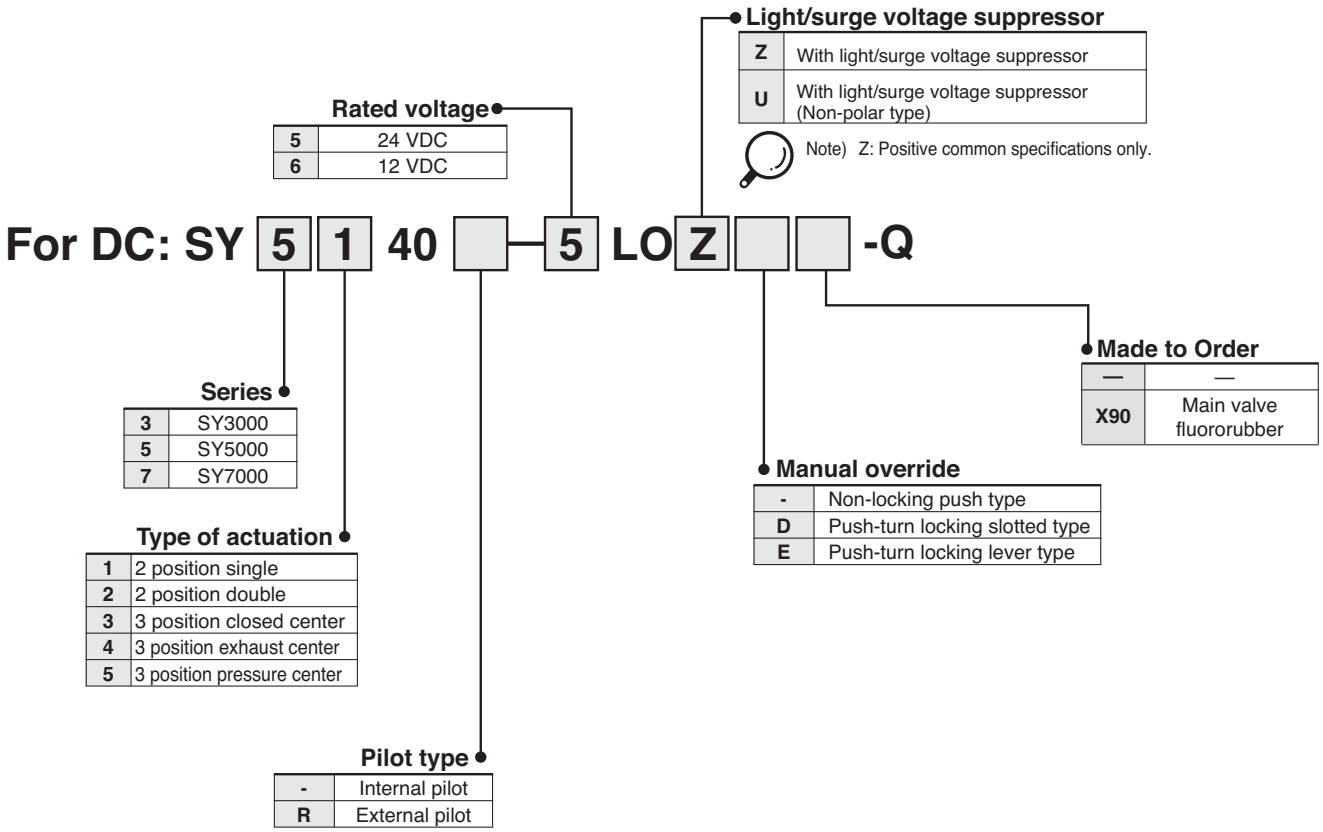

How to Order Connector Assembly

For 12, 24 VDC

For DC	For SY3000	For SY5000/7000
For single solenoid	SY3000-37-3A	SY5000-37-3A
Double solenoid, 3 position type	SY3000-37-4A	SY5000-37-4A
Single with spacer assembly	SY5000-37-3A	SY5000-37-5A
Double, 3 position with spacer assembly	SY3000-37-6A	SY5000-37-6A

- **Multiple valve wiring is simplified through the use of the flat cable connector.**
- **Clean appearance**

In the case of a flat ribbon cable type, each valve is wired on the print board of manifold base to allow the external wiring to be piped all together with 26 pins MIL connector.

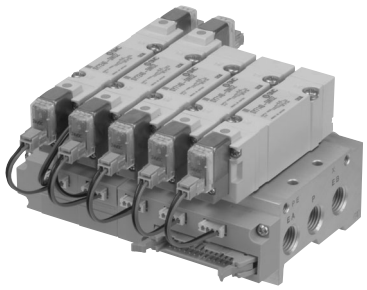

Flat Ribbon Cable Manifold Specifications

Model		SS5Y3-41P	SS5Y3-42P	SS5Y5-41P	SS5Y5-42P	SS5Y7-42P
Applicable valve		SY3□40		SY5□40		SY7□40
Manifold type		Single base/B mount				
P(SUP)/R(EXH)		Common SUP, Common EXH				
Valve stations		4 to 12 stations (1)		3 to 12 stations Note 1)		
A, B port Porting specifications	Location	Base				
	Direction	Side				
Port size	P, EA, EB port	1/8		1/4		1/4
	A, B port	M5 C4 (One-touch fitting for ø4) C6 (One-touch fitting for ø6)	1/8 C4 (One-touch fitting for ø4) C6 (One-touch fitting for ø6)	1/8 C6 (One-touch fitting for ø6) C8 (One-touch fitting for ø8)	1/4 C6 (One-touch fitting for ø6) C8 (One-touch fitting for ø8)	1/4 C10 (One-touch fitting for ø10)
Manifold base weight W (g), n: Stations		W = 39n + 83	W = 48n + 99	W = 67n + 118	W = 88n + 151	W = 109n + 174
Applicable flat ribbon cable connector		Flat ribbon cable connector, Socket: 26 pins MIL type with strain relief, Conforming to MIL-C-83503				
Internal wiring		In common between +COM and –COM (Z type: +COM only).				
Rated voltage		12, 24 VDC				

Note 1) For more than 10 stations (more than 5 stations in case of SS5Y7), supply pressure to P port on both sides and exhaust from EA/EB port on both sides.
Note 2) The withstand voltage specification for the wiring unit section is JIS C 0704, Grade 1 or its equivalent.
Note 3) Refer to "Manifold Option" on page 109.

Flow Characteristics

Model	Port size		Flow characteristics							
	1, 5, 3 (P, EA, EB)	4, 2 (A, B)	1 → 4/2 (P → A/B)				4/2 → 5/3 (A/B → EA/EB)			
			C (dm³/(s·bar))	b	Cv	Q[ℓ/min(ANR)]*	C (dm³/(s·bar))	b	Cv	Q[ℓ/min(ANR)]*
SS5Y3-41P	1/8	C6	0.75	0.19	0.18	179	0.81	0.23	0.20	197
SS5Y3-42P	1/8	C6	0.75	0.20	0.18	180	0.82	0.20	0.20	196
SS5Y5-41P	1/4	C8	1.8	0.23	0.44	439	1.9	0.16	0.45	445
SS5Y5-42P	1/4	C8	1.9	0.20	0.46	455	1.9	0.12	0.43	436
SS5Y7-42P	1/4	C10	3.0	0.25	0.75	740	3.0	0.12	0.66	688

Note) The value is for manifold base with 5 stations and individually operated 2 position type.
* These values have been calculated according to ISO6358 and represent the flow rate measured in standard conditions at an upstream pressure of 0.6 MPa (relative pressure) and a differential pressure of 0.1MPa.

Internal Wiring of Manifold (Non-polar type)

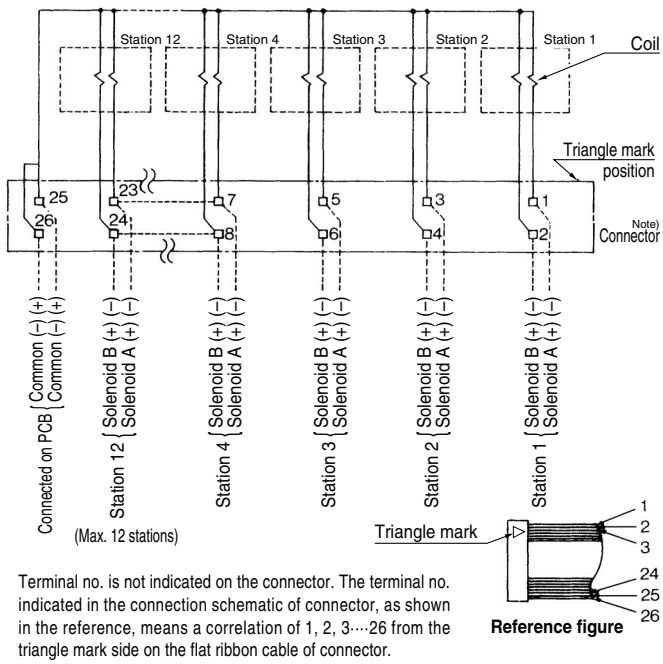

Terminal no. is not indicated on the connector. The terminal no. indicated in the connection schematic of connector, as shown in the reference, means a correlation of 1, 2, 3····26 from the triangle mark side on the flat ribbon cable of connector.

- For more than 10 stations, both poles of the common should be wired.
- For single solenoid, connect to the solenoid A side.
- The maximum number of stations that can be accommodated is 12. For more stations, please contact SMC.

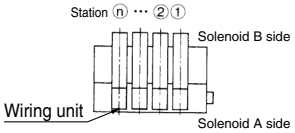

⚠Caution

- For non-polar (U) valves, the electrical DC connections can be used with either positive and negative COM. For type (Z), only use with positive COM as the valve does not operate correctly when used with negative COM.

SY3000: SS5Y3-41P-Stations-M5, C4, N3 C6, N7 -Q

With interface regulator (with gauge)

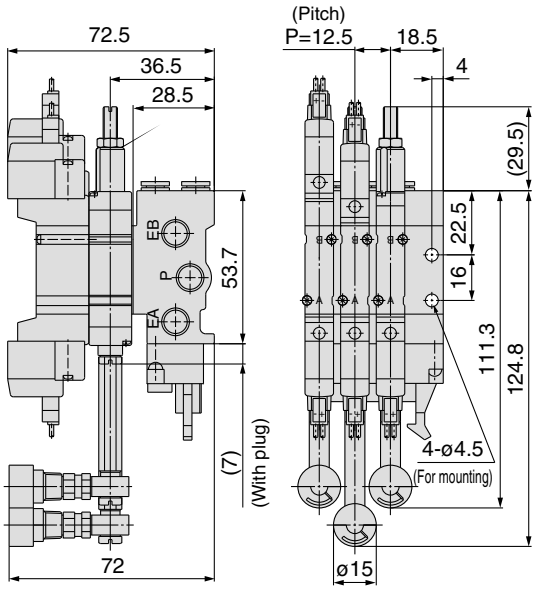

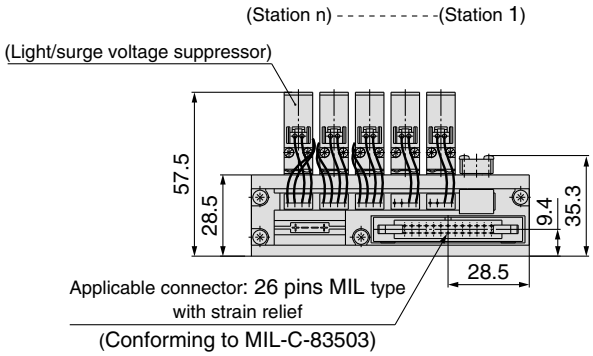

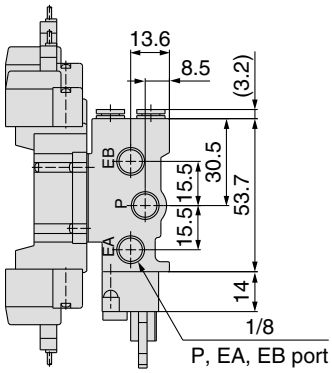

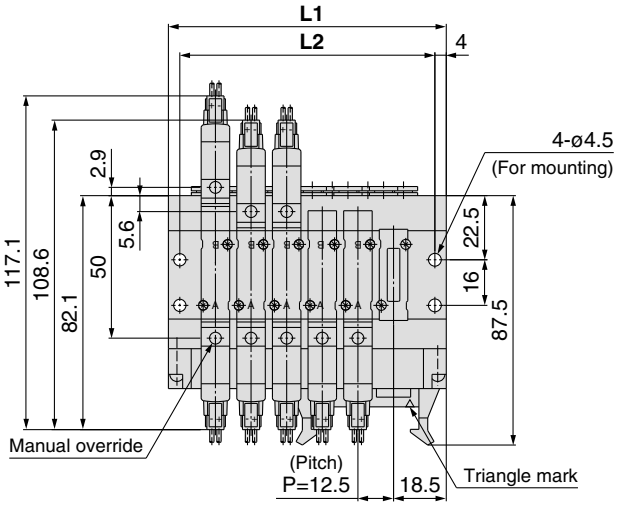

For M5

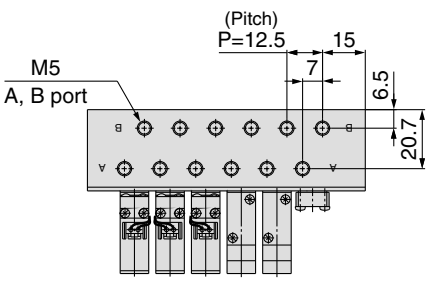

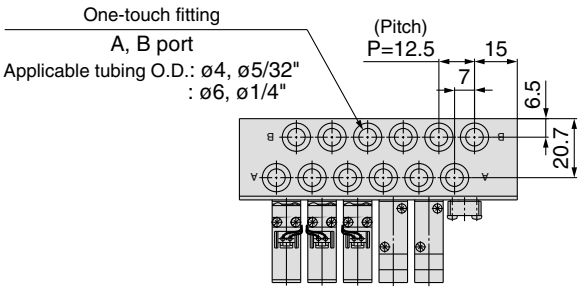

Stations n	4	5	6	7	8	9	10	11	12
L1	72.5	85	97.5	110	122.5	135	147.5	160	172.5
L2	64.5	77	89.5	102	114.5	127	139.5	152	164.5

SY5000: SS5Y5-41P-Stations-01, C6,N7 C8,N9 -Q

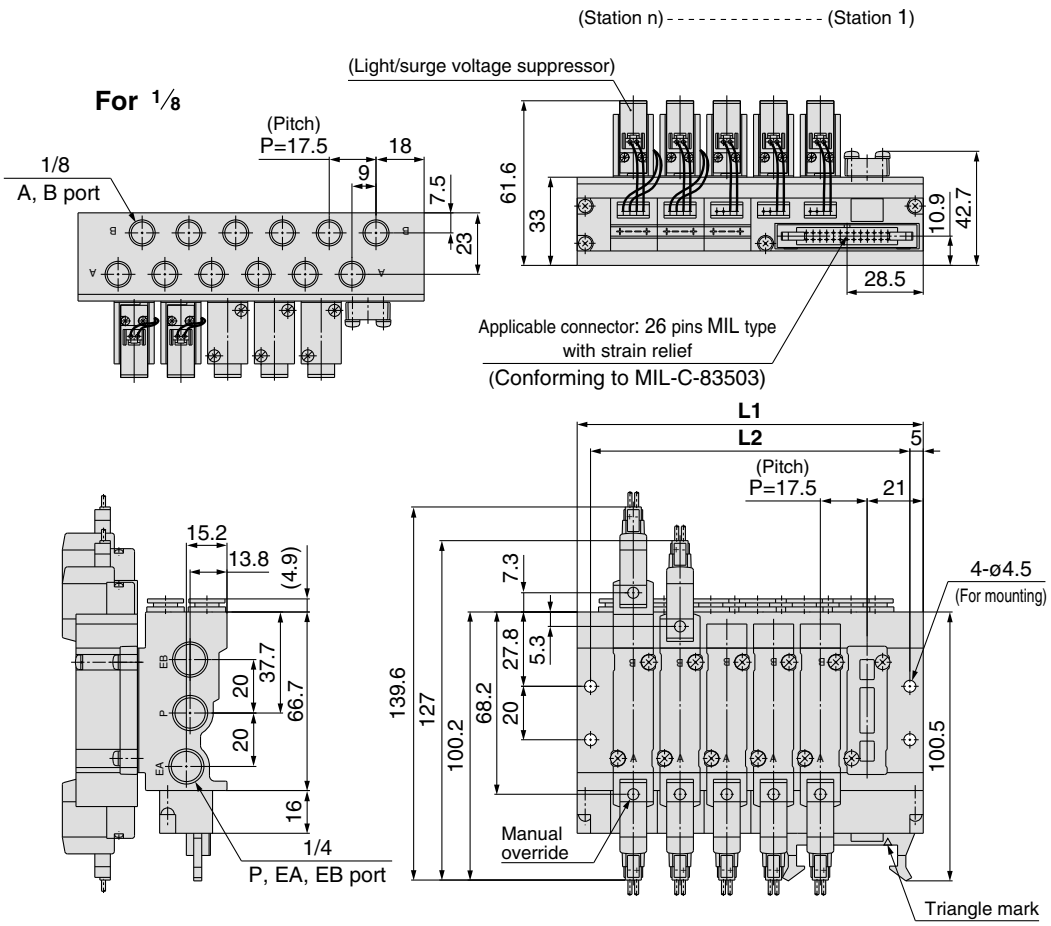

With interface regulator (with gauge)

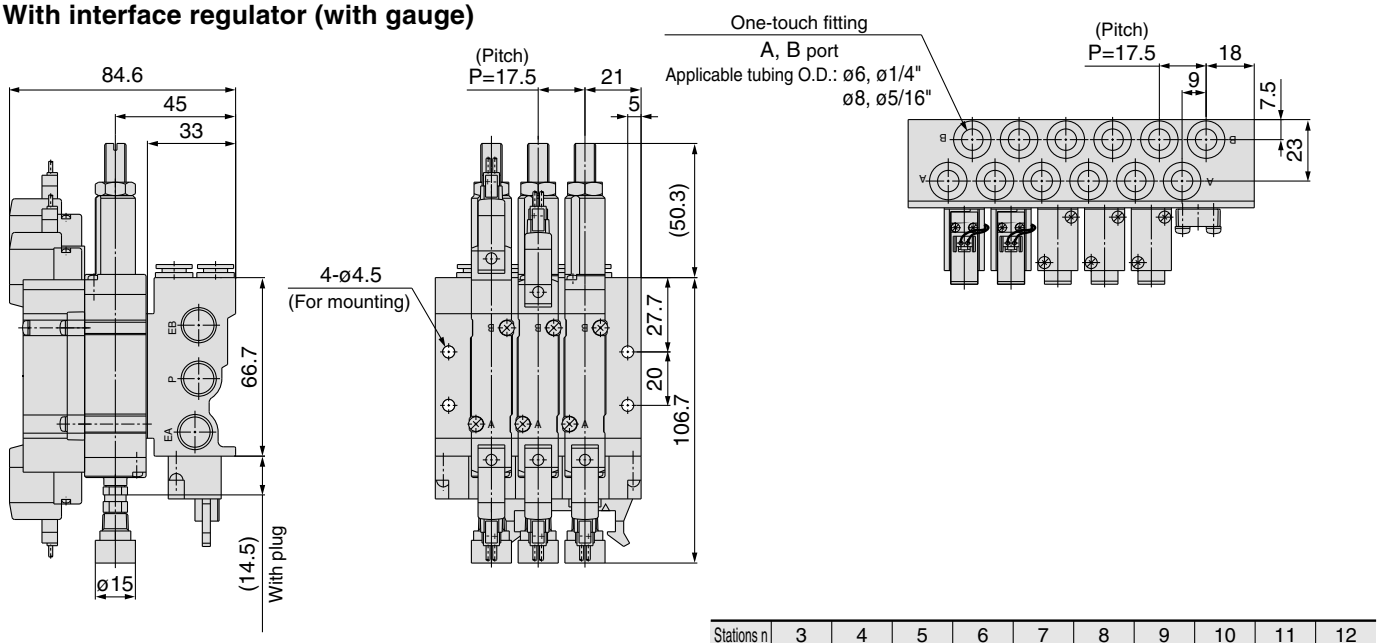

Stations n	3	4	5	6	7	8	9	10	11	12
L1	77	94.5	112	129.5	147	164.5	182	199.5	217	234.5
L2	67	84.5	102	119.5	137	154.5	172	189.5	207	224.5

SY3000: SS5Y3-42P-Stations-01, C4, N3 / C6, N7 □ -Q

With interface regulator (with gauge)

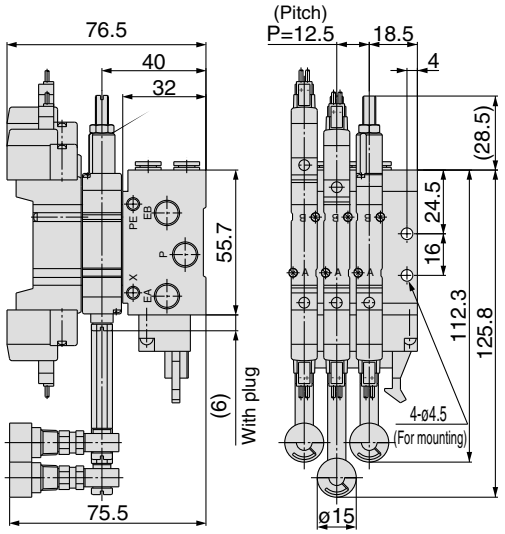

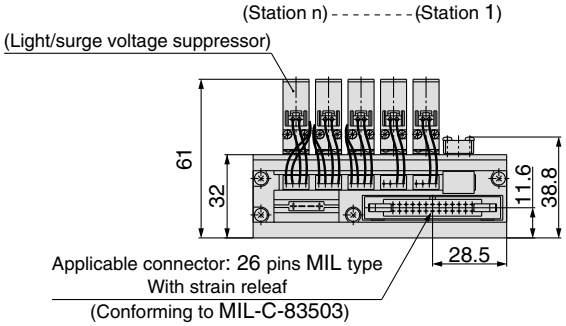

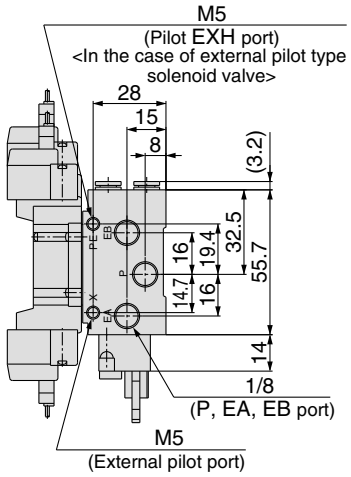

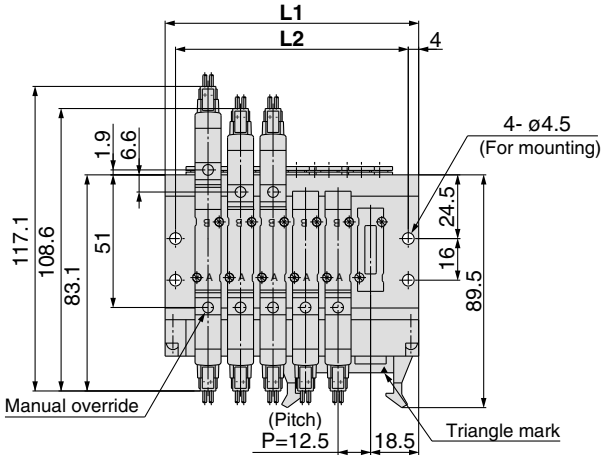

For 1/8

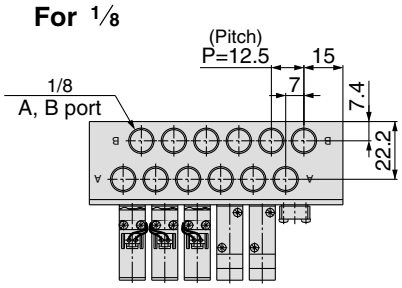

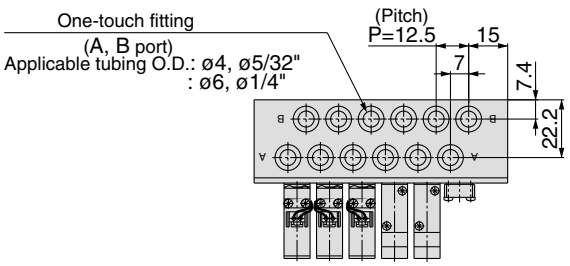

Stations n	4	5	6	7	8	9	10	11	12
L1	72.5	85	97.5	110	122.5	135	147.5	160	172.5
L2	64.5	77	89.5	102	114.5	127	139.5	152	164.5

SY5000: SS5Y5-42P-Stations-02,C6, N7 / C8, N9 □ -Q

Grommet (G)

With interface regulator (with gauge)

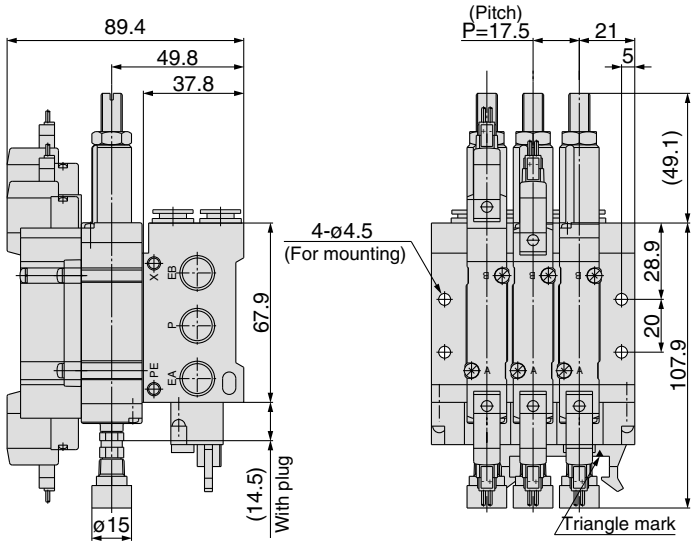

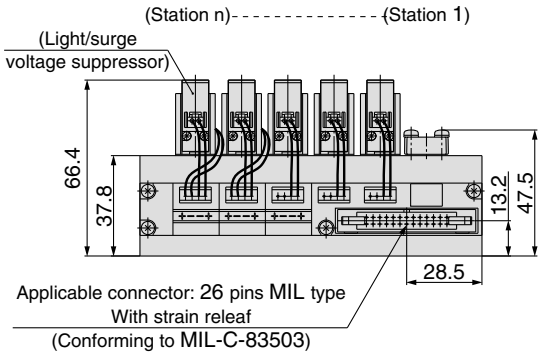

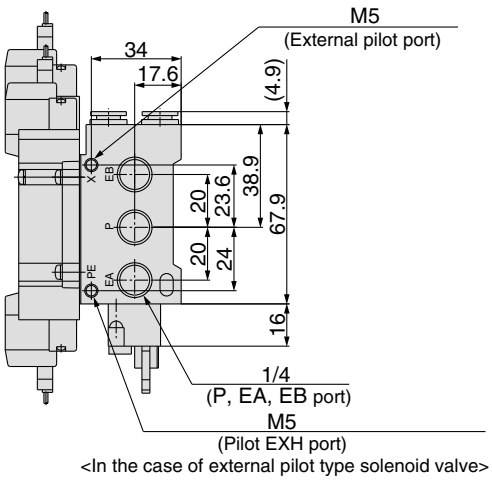

<In the case of external pilot type solenoid valve>

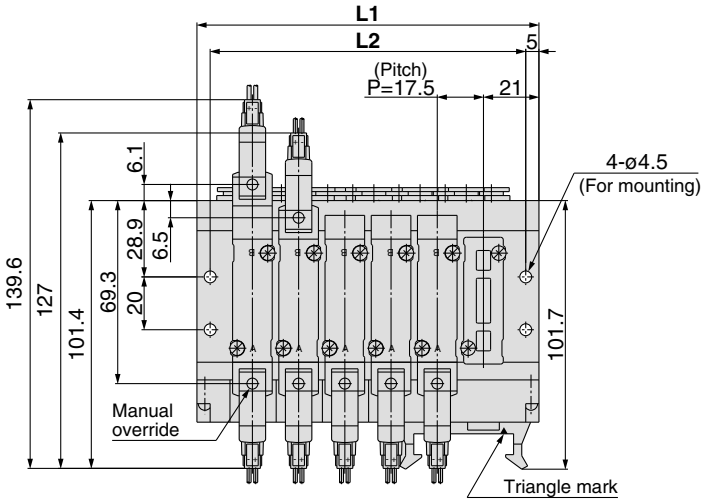

For 1/4

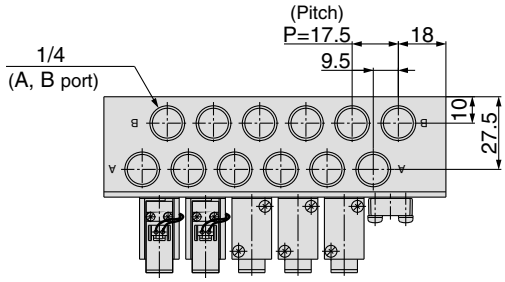

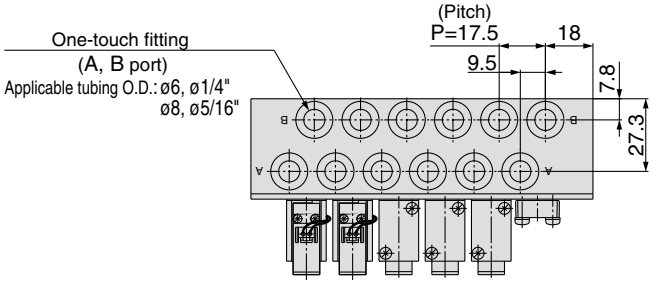

Stations n	3	4	5	6	7	8	9	10	11	12
L1	77	94.5	112	129.5	147	164.5	182	199.5	217	234.5
L2	67	84.5	102	119.5	137	154.5	172	189.5	207	224.5

SY7000: SS5Y7-42P-Stations-02, C10, N11□-Q

Grommet (G)

With interface regulator (with gauge)

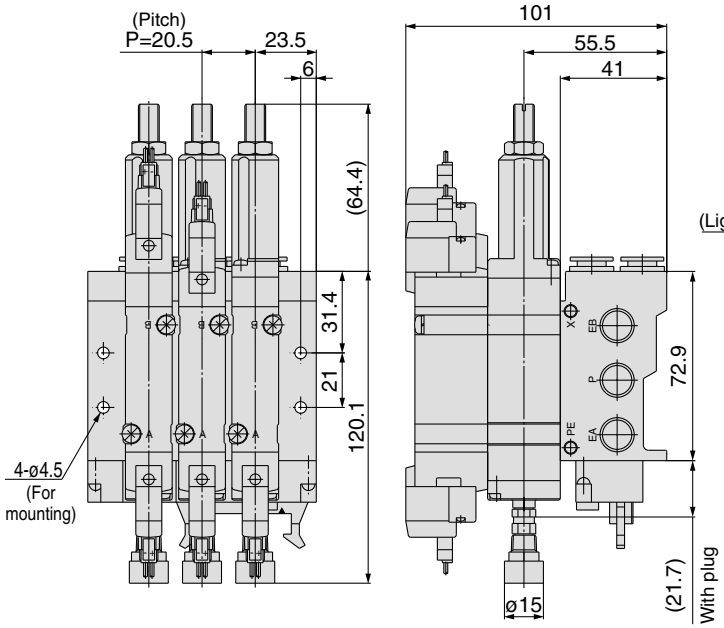

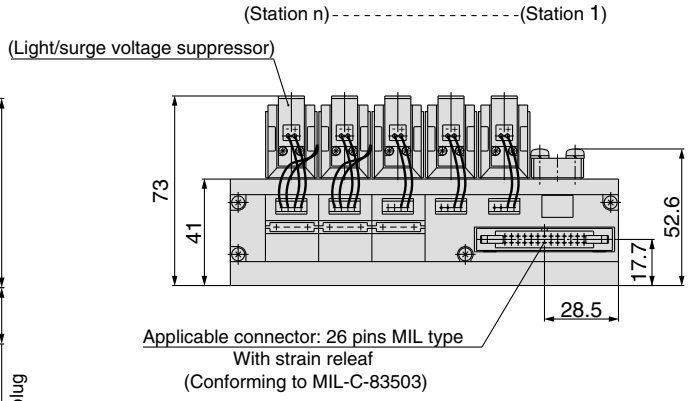

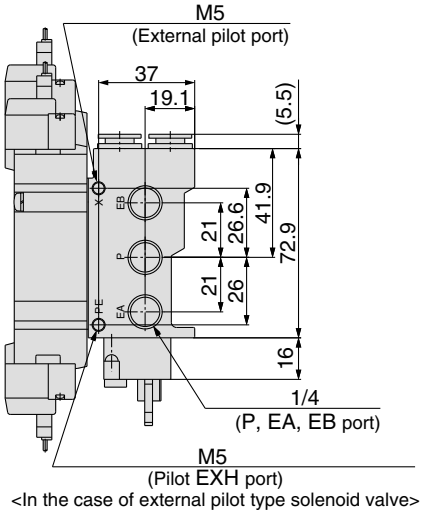

<In the case of external pilot type solenoid valve>

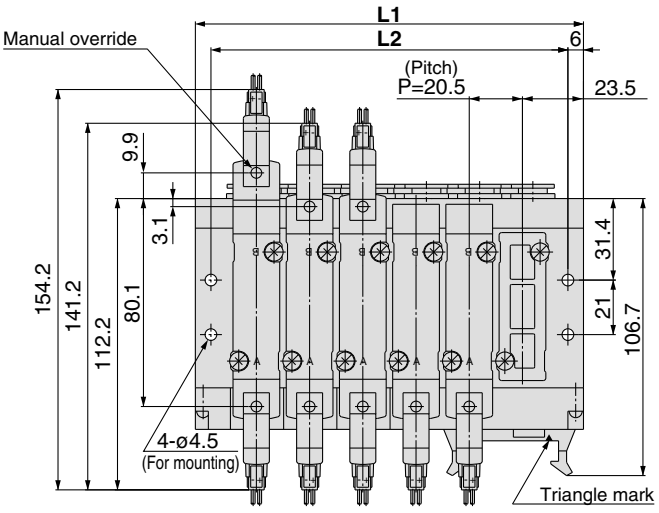

For 1/4

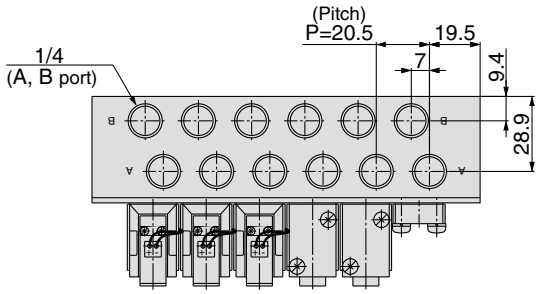

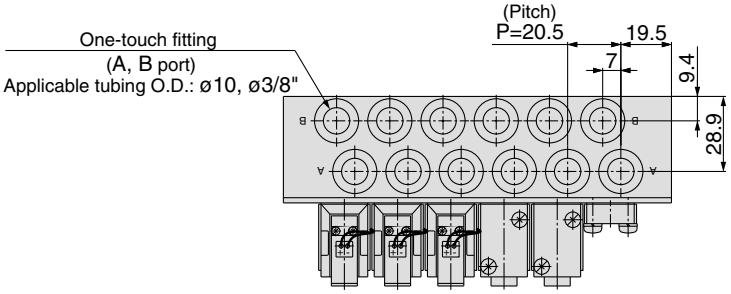

Stations n	3	4	5	6	7	8	9	10	11	12
L1	88	108.5	129	149.5	170	190.5	211	231.5	252	272.5
L2	76	96.5	117	137.5	158	178.5	199	219.5	240	260.5

5 Port Solenoid Valve
Series SY9000
Base Mounted
Type 43P Stacking Type/Flat Ribbon Cable

How to Order Manifold

SS5Y9 – 43P – 05 U [ ] – C8 [ ] [ ] -Q

Manifold series

9	SY9000

Valve stations

Symbol	Stations
04	4 stations
⋮	⋮
12	12 stations

∗ This also includes the number of blanking plate assemblies.

P, R port outlets

Symbol	Port outlet	Applicable stations
U	U side	4 to 10 stations
D	D side	
B	Both sides	4 to 12 stations

SUP/EXH block assembly specifications

Symbol	Specifications
-	Standard/Internal pilot specification
R	External pilot specification
S	Internal pilot/Built-in silencer
RS	External pilot/Built-in silencer

Thread type

-	Rc
F	G
N	NPT
T	NPTF

Option

Symbol	Mounting
-	Direct mounting
D	DIN rail mounting (with DIN rail)
D0	DIN rail mounting (without DIN rail)
D∗	When a longer DIN rail is desired than the specified stations, specify the station number to be required into ∗ mark.

A, B port size

Thread piping

Symbol	Port size
02	1/4
03	3/8

One-touch fitting (Metric size)

Symbol	Port size
C8	One-touch fitting for ø8
C10	One-touch fitting for ø10
C12	One-touch fitting for ø12
M	Mixed

One-touch fitting (Inch size)

Symbol	Port size
N9	One-touch fitting for ø5/16"
N11	One-touch fitting for ø3/8"
M	Mixed

∗ In the case of mixed specifications (M), indicate separately on the manifold specification sheet.

How to Order Valve Manifold Assembly (Example)

Example

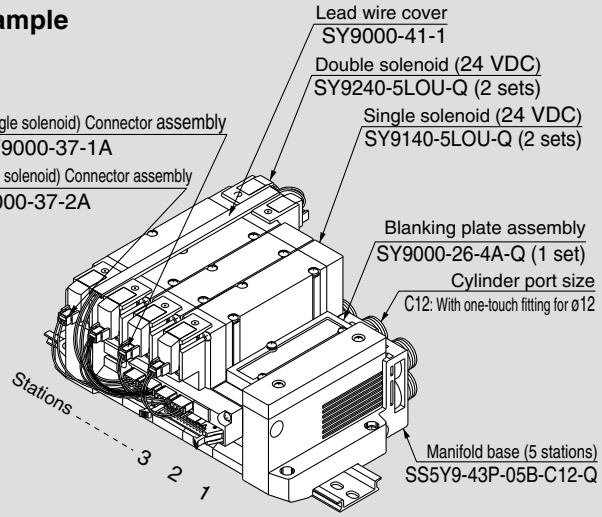

SS5Y9-43P-05B-C12-Q **1 set (Type 43, 5 station manifold base part no.)**
- ∗ **SY9000-26-4A-Q** **1 set (Blanking plate assembly part no.)**
- ∗ **SY9140-5LOU-Q** **2 sets (Single solenoid part no.)**
- ∗ **SY9240-5LOU-Q** **2 sets (Double solenoid part no.)**
- ∗ **SY9000-37-1A** **2 sets (Connector assembly part no.)**
- ∗ **SY9000-37-2A** **2 sets (Connector assembly part no.)**
- ∗ **SY9000-41-1** **1 set (Lead wire cover)**

The asterisk denotes the symbol for assembly.
Prefix it to the part nos. of the solenoid valve, etc.

Add the valve and option part number under the manifold base part number. In the case of complex arrangement, specify them on the manifold specification sheet.

How to Order Valve

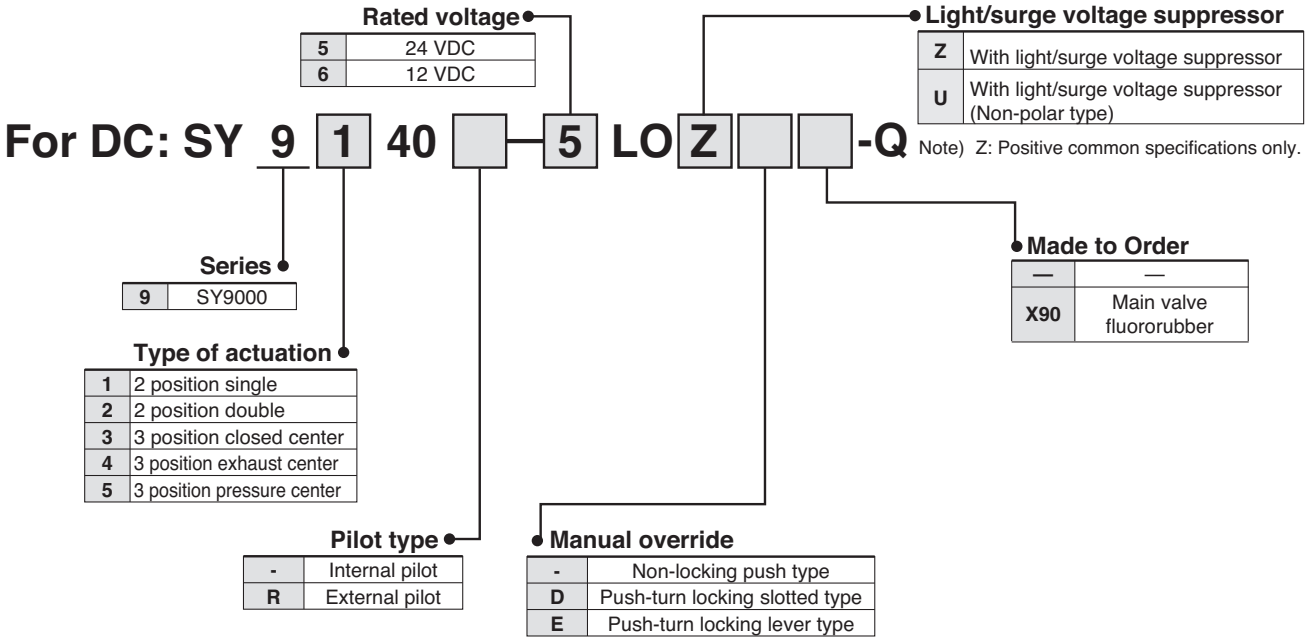

How to Order Connector Assembly

For 12, 24 VDC

For DC	For SY9000
For single solenoid	SY9000-37-1A
Double solenoid, 3 position type	SY9000-37-2A
Single with spacer assembly	SY9000-37-3A
Double, 3 position with spacer assembly	SY9000-37-4A

- **Multiple valve wiring is simplified through the use of the flat cable connector.**
- **Clean appearance**

In the case of a flat ribbon cable type, each valve is wired on the print board of manifold base to allow the external wiring to be piped all together with 26 pins MIL connector.

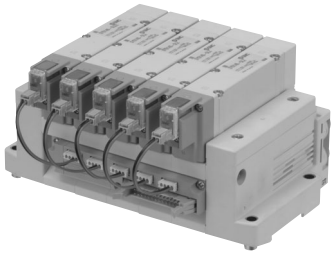

Flat Ribbon Cable Manifold Specifications

Model		SS5Y9-43P
Applicable valve		SY9□40
Manifold type		Stacking type
P (SUP)/R (EXH)		Common SUP, Common EXH
Valve stations		4 to 12 stations Note 1)
A, B port Porting specifications	Location	Base
	Direction	Side
Port size	P, EA, EB port	C12 (One-touch fitting for ø12)
	A, B port	1/4 3/8 C8 (One-touch fitting for ø8) C10 (One-touch fitting for ø10) C12 (One-touch fitting for ø12)
Manifold base weight W (g) n: Stations		W = 114n + 343
Applicable flat ribbon cable connector		Flat ribbon cable connection, Socket: 26 pins MIL with strain relief, Conforming to MIL-C-83503
Internal wiring		In common between +COM and –COM (Z type: +COM only)
Rated voltage		12, 24 VDC

Note 1) For more than 10 stations, supply pressure to P port on both sides and exhaust from EA/EB port on both sides.
Note 2) The withstand voltage specification for the wiring unit section is JIS C 0704, Grade 1 or its equivalent.
Note 3) Refer to "Manifold Option" on page 109.

Flow Characteristics

Model	Port size		Flow characteristics							
	1, 5, 3 (P, EA, EB)	4, 2 (A, B)	1 → 4/2 (P → A/B)				4/2 → 5/3 (A/B → EA/EB)			
			C (dm³/(s·bar))	b	Cv	Q[ℓ/min(ANR)]*	C (dm³/(s·bar))	b	Cv	Q[ℓ/min(ANR)]*
SS5Y9-43P	C12	C12	6.4	0.29	1.6	1617	7.3	0.29	1.8	1845

Note) The value is for manifold base with 5 stations and individually operated 2 position type.
* These values have been calculated according to ISO6358 and represent the flow rate measured in standard conditions at an upstream pressure of 0.6 MPa (relative pressure) and a differential pressure of 0.1MPa.

Internal Wiring of Manifold (Non-polar type)

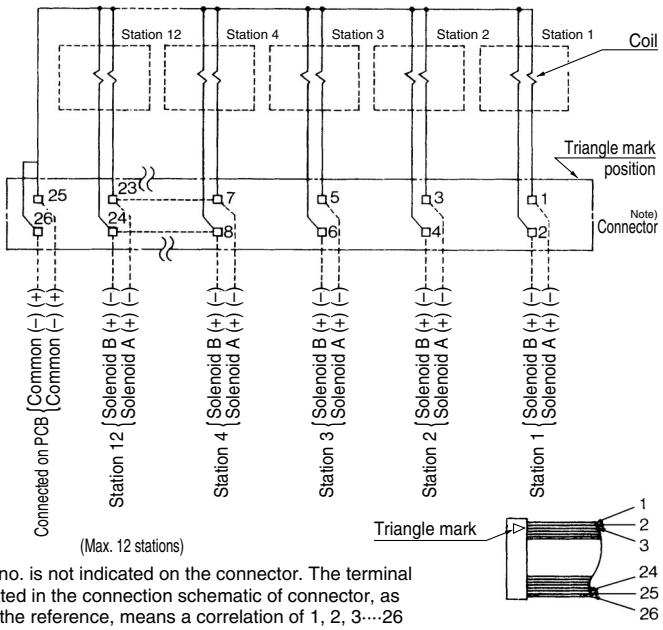

Note)
Terminal no. is not indicated on the connector. The terminal no. indicated in the connection schematic of connector, as shown in the reference, means a correlation of 1, 2, 3····26 from the triangle mark side on the flat ribbon cable of connector.

Reference figure

- For more than 10 stations, both poles of the common should be wired.
- For single solenoid, connect to the solenoid A side.
- The maximum number of stations that can be accommodated is 12. For more stations, please contact SMC.

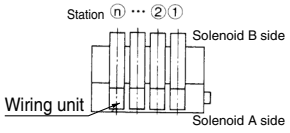

⚠Caution

- For non-polar (U) valves, the electrical DC connections can be used with either positive and negative COM. For type (Z), only use with positive COM as the valve does not operate correctly when used with negative COM.

SY9000: SS5Y9-43P-Stations D□-02 03 C8, N9 C10, N11 C12 □(-D)-Q

* When P, R port outlets are indicated on the D side, the P, R ports on the opposite side are plugged.

With External Pilot Specifications

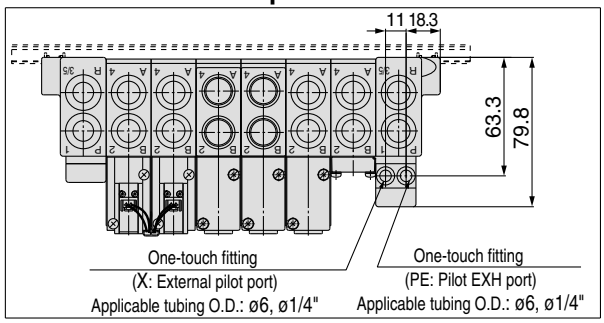

* Air discharge port on the built-in silencer type and the external pilot's extracting position are in the D side.

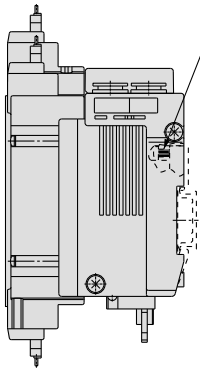

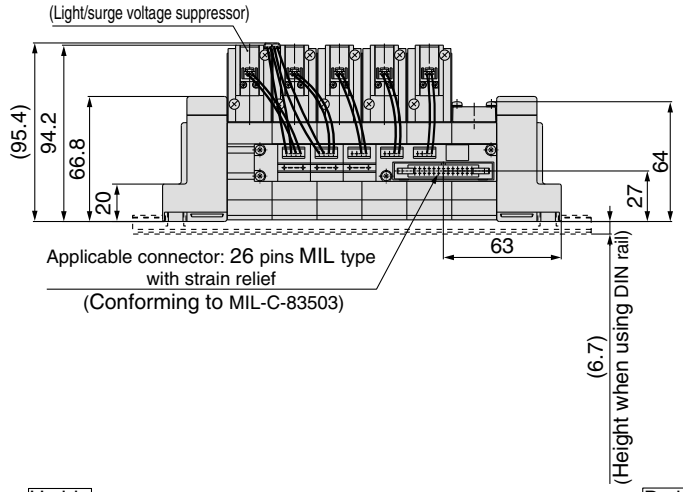

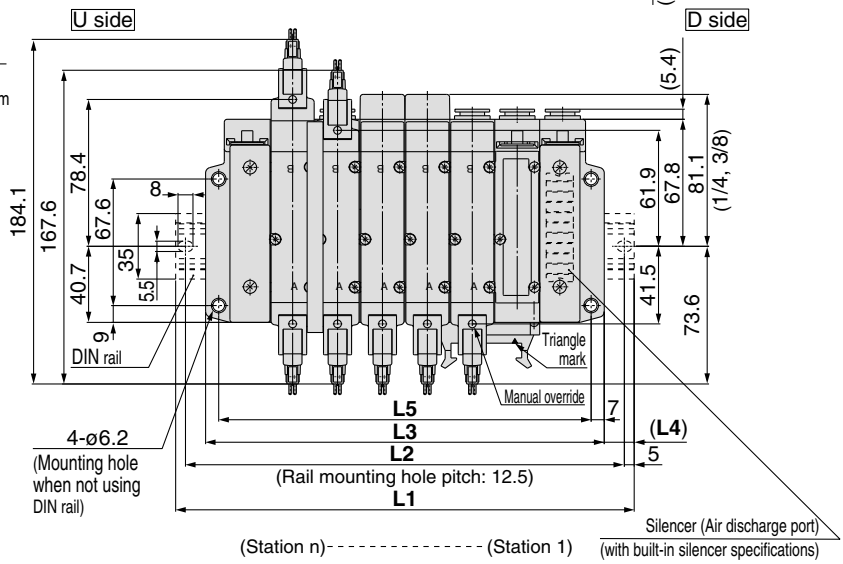

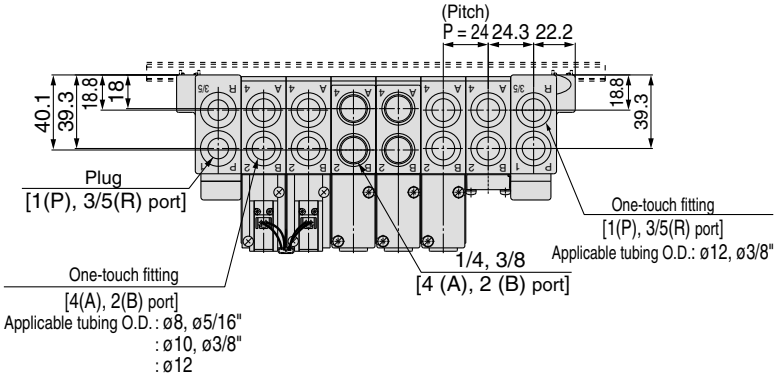

Stations n	4 stations	5	6	7	8	9	10 stations
L1	198	223	248	260.5	285.5	310.5	335.5
L2	187.5	212.5	237.5	250	275	300	325
L3	165	189	213	237	261	285	309
L4	16.5	17	17.5	12	12.5	13	13.5
L5	151	175	199	223	247	271	295

SY9000: SS5Y9-43P- Stations U □ - 02 03 C8, N9 C10, N11 C12 □ (-D)-Q

∗ When P, R port outlets are indicated on the U side, the P, R ports on the opposite side are plugged.

With External Pilot Specifications

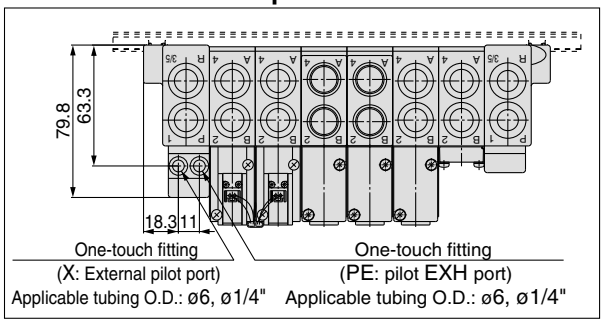

∗ Air discharge port on the built-in silencer type and the external pilot's extracting position are in the U side.

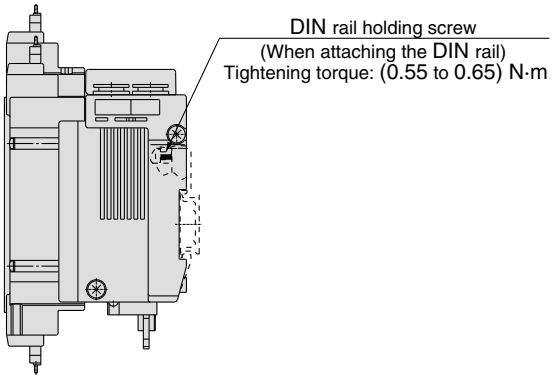

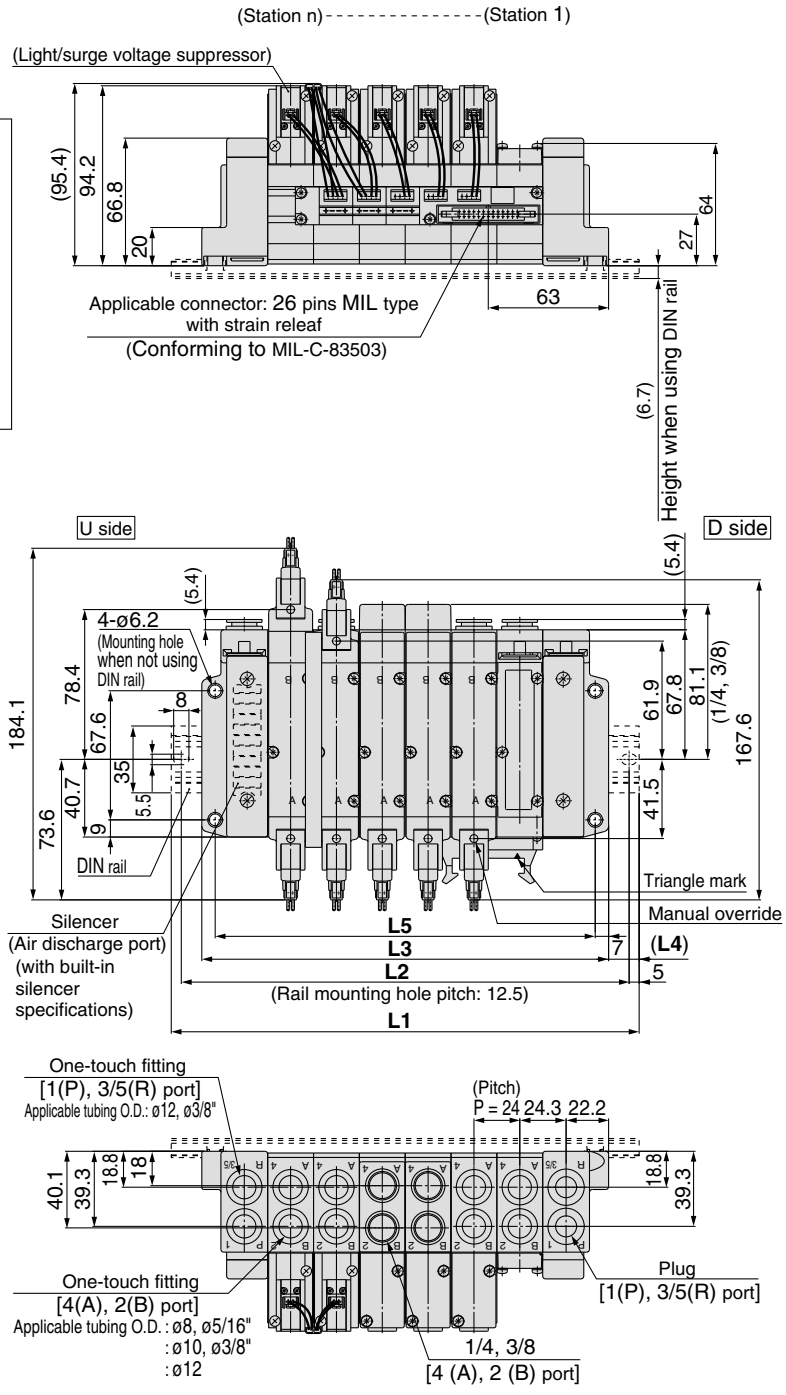

Stations n	4 stations	5	6	7	8	9	10 stations
L1	198	223	248	260.5	285.5	310.5	335.5
L2	187.5	212.5	237.5	250	275	300	325
L3	165	189	213	237	261	285	309
L4	16.5	17	17.5	12	12.5	13	13.5
L5	151	175	199	223	247	271	295

SY9000: SS5Y9-43P- Stations B □ -02 C8, N9 / 03 C10, N11 / C12 □ (-D)-Q

∗ When P, R port outlets are indicated on the B side, the P, R ports on the both sides are in the open state.

(Station n) - - - - - - - - - - - - - - - (Station 1)

With External Pilot Specifications

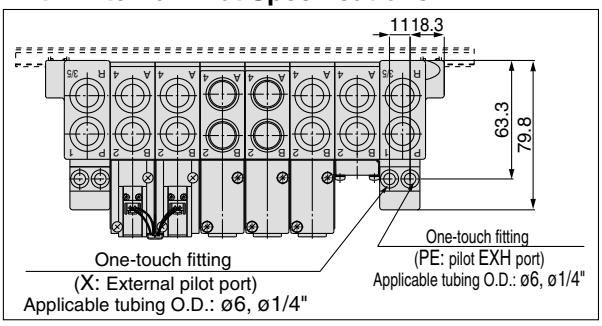

∗ Air discharge port on the built-in silencer type and the external pilot's extracting position are in the B side (both sides).

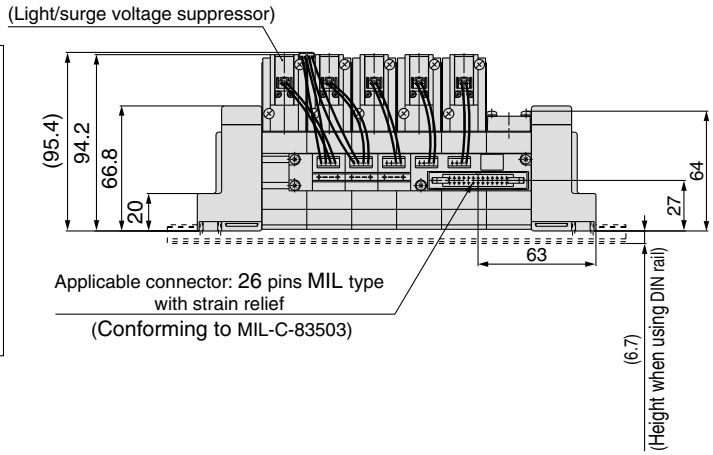

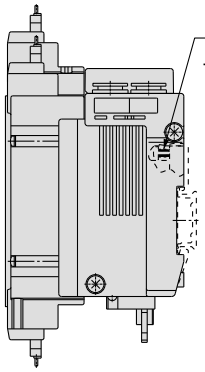

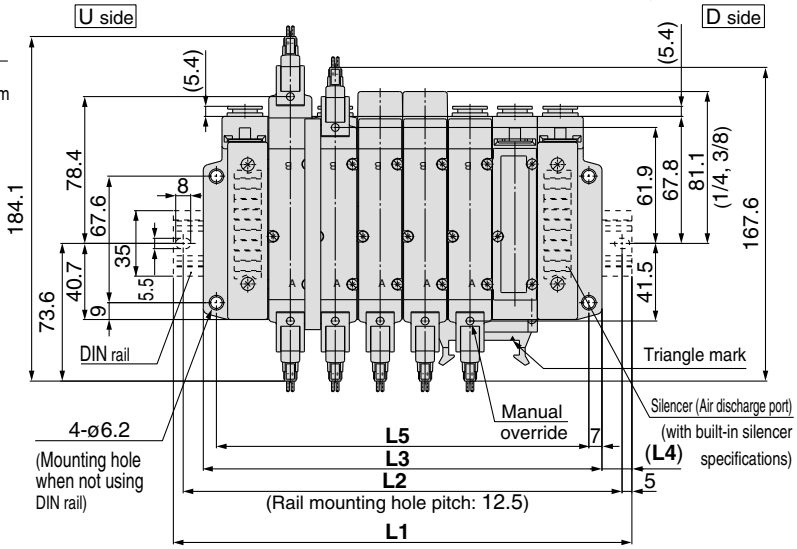

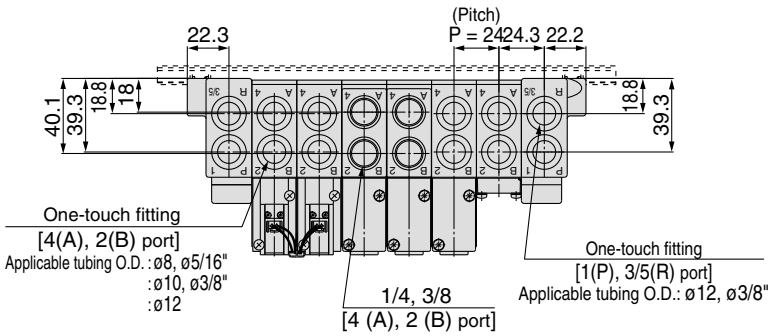

Stations n	4 stations	5	6	7	8	9	10	11	12 stations
L1	198	223	248	260.5	285.5	310.5	335.5	360.5	385.5
L2	187.5	212.5	237.5	250	275	300	325	350	375
L3	165	189	213	237	261	285	309	333	357
L4	16.5	17	17.5	12	12.5	13	13.5	14	14.5
L5	151	175	199	223	247	271	295	319	343

EX510 Gateway-type Serial Transmission System Base Mounted Manifold/Integrated Type

Type 42SA Series SY3000/5000/7000

How to Order Manifold

SS5Y 3 – 42SA □ – 03 – 01 □ – Q

Manifold series

3	SY3000
5	SY5000
7	SY7000

SI unit

—	NPN output (+COM.)
N	PNP output (–COM.)

Valve stations

Symbol	Stations	Note
03	3 stations	Double wiring Note 1)
⋮	⋮	
08	8 stations	
03	3 stations	Specified layout Note 2) (Compatible with 16 solenoid valves)
⋮	⋮	
16	16 stations	

• SS5Y3 can be set from 4 stations.
• The number of the blanking plate assembly is also included.
Note 1) Double wiring: Use of a single solenoid will result in an unused control signal. If this is not desired, order with a specified layout.
Note 2) Specified layout: Indicate wiring specifications on the manifold specification sheet. (Note that double and 3 position valves cannot be used where single solenoid wiring has been specified.)

Thread type

—	Rc
F	G
N	NPT
T	NPTF

A, B port size

Thread piping

01	1/8	SY3000
02	1/4	SY5000/7000

One-touch fitting (Metric size)

C4	One-touch fitting for ø4	SY3000
C6	One-touch fitting for ø6	
C6	One-touch fitting for ø6	SY5000
C8	One-touch fitting for ø8	
C10	One-touch fitting for ø10	SY7000

One-touch fitting (Inch size)

N3	One-touch fitting for ø5/32"	SY3000
N7	One-touch fitting for ø1/4"	
N7	One-touch fitting for ø1/4"	SY5000
N9	One-touch fitting for ø5/16"	
N11	One-touch fitting for ø3/8"	SY7000

SI unit part no.

Symbol	SI unit specifications	SI unit part no.
—	NPN output (+COM.)	EX510-S001
N	PNP output (–COM.)	EX510-S101

How to Order Manifold Assembly (Example)

Example

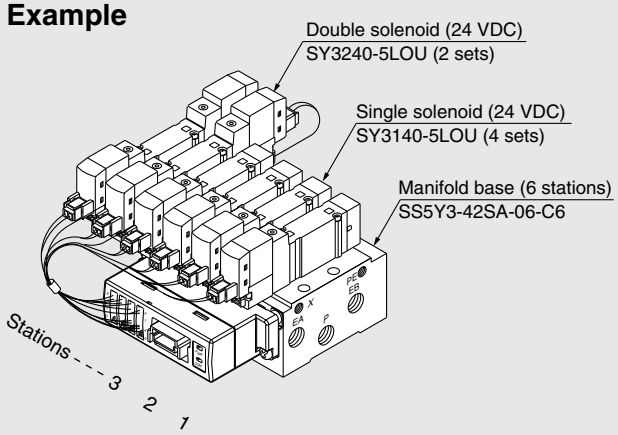

SS5Y3-42SA-06-C6 ····· 1 set (42SA type 6-station manifold part no.)
*** SY3140-5LOU ····· 4 sets (Single solenoid part no.)**
*** SY3240-5LOU ····· 2 sets (Double solenoid part no.)**
→ The asterisk denotes the symbol for assembly. Prefix to the part no. of the solenoid valve, etc.

Add the valve and option part number under the manifold base part number.
When entry of part numbers becomes complicated, indicate by the manifold specification sheet. For a manifold for an EX510, the length of the lead wire for a connector assembly depends on the number of stations. Therefore, the manifold assembly is shipped with the valves (including blanking plates) and connector assembly mounted on it, as the standard specification. Be sure to specify the part nos. of the solenoid valves to be mounted.

How to Order Valves

SY 3 1 40 □ □ – 5 LO Z □ – □ – Q

Series

3	SY3000
5	SY5000
7	SY7000

Type of actuation

1	2 position single
2	2 position double
3	3 position closed centre
4	3 position exhaust centre
5	3 position pressure centre

Pilot type

—	Internal pilot
R	External pilot

Coil specifications

—	Standard
T	With power saving circuit

Rated voltage: 24 VDC

Light/Surge voltage suppressor

Z	With light/surge voltage suppressor
U	With light/surge voltage suppressor (non-polar type)

Note 1) Power saving circuit is only available in the “Z” type.
Note 2) When the SI unit is the PNP output (-COM.), only the "U" type is available.

Manual override

—	Non-locking push type
D	Push-turn locking slotted type
E	Push-turn locking lever type

Made to Order

—	—
X90	Main valve fluororubber

Note) When ordering single unit of the base mounted type solenoid valve, the mounting screws and gaskets for the manifold are included.

Dimensions

SY3000: SS5Y3-42SA□-Stations-01□, C4, N3 C6, N7

With interface regulator (with gauge)

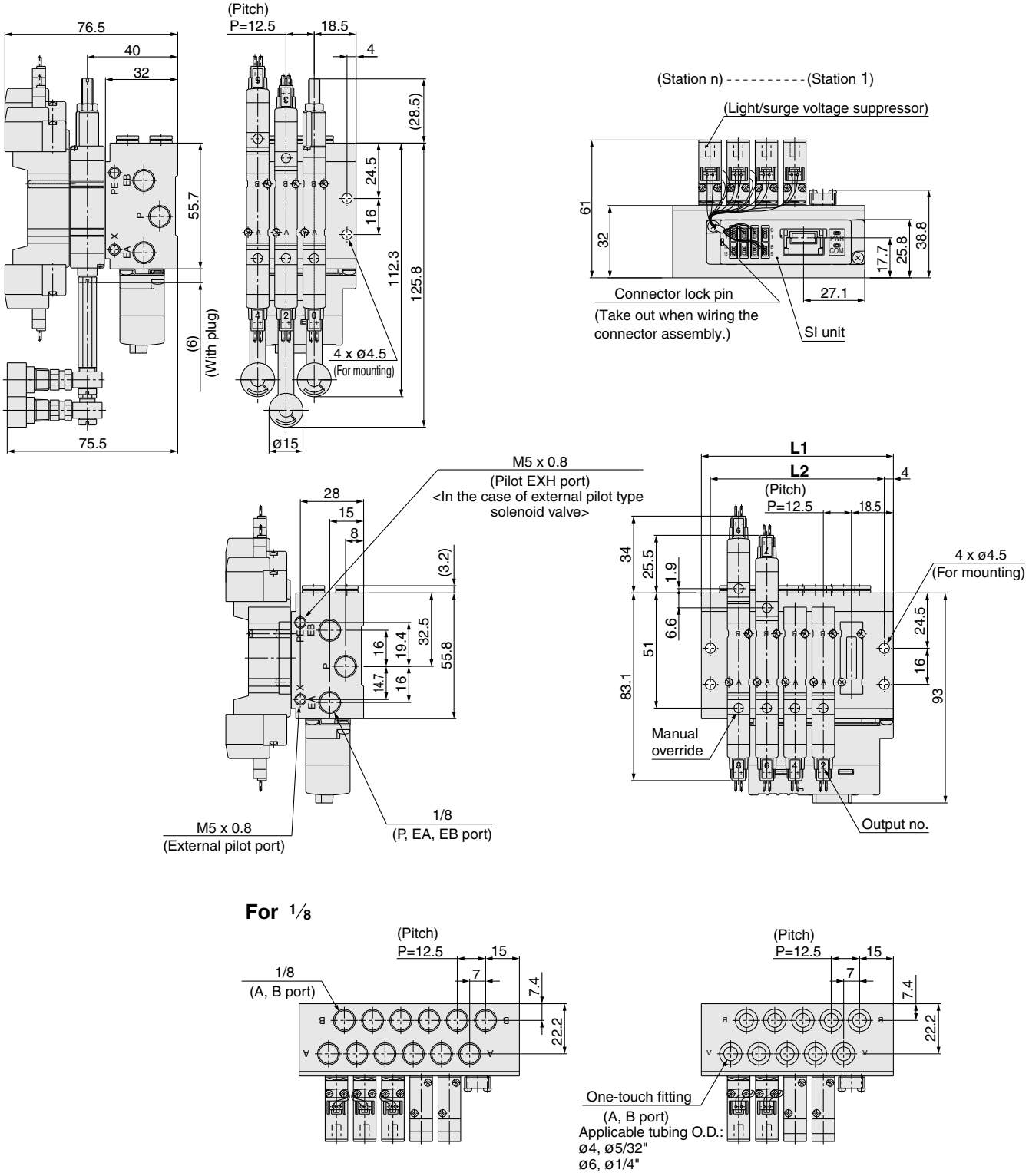

For 1/8

Stations n	**4** stations	**5**	**6**	**7**	**8**	**9**	**10**	**11**	**12**	**13**	**14**	**15**	**16** stations
L1	72.5	85	97.5	110	122.5	135	147.5	160	172.5	185	197.5	210	222.5
L2	64.5	77	89.5	102	114.5	127	139.5	152	164.5	177	189.5	202	214.5

SY5000: SS5Y5-42SA□-Stations-02□, C6, N7 C8, N9

With interface regulator (with gauge)

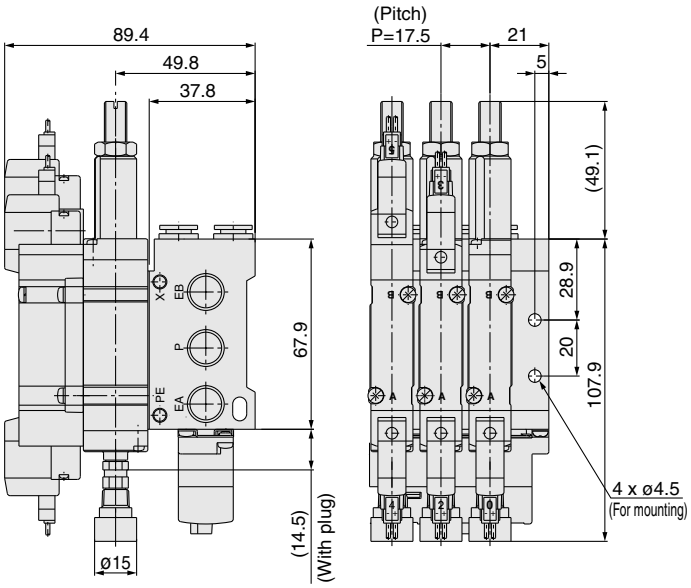

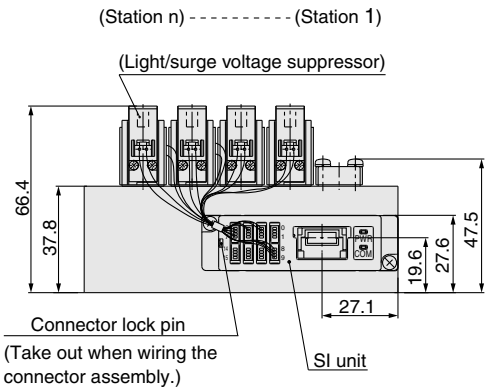

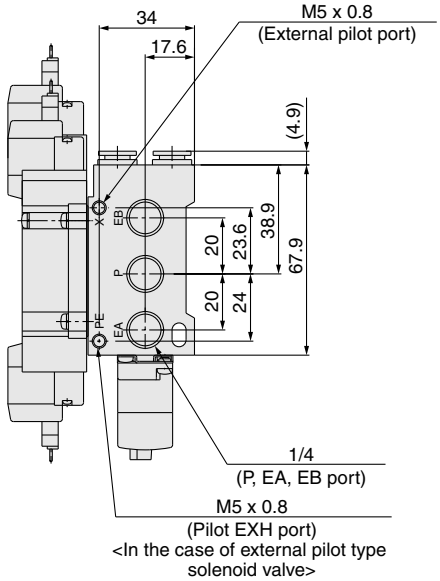

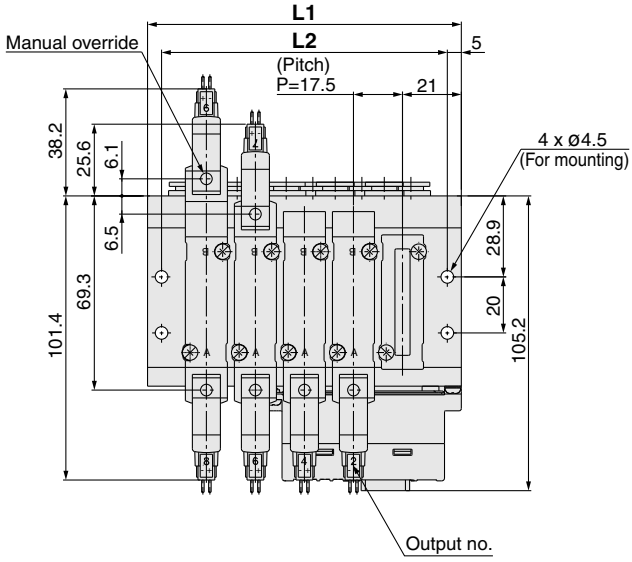

For 1/4

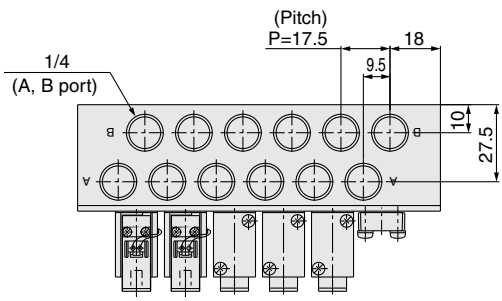

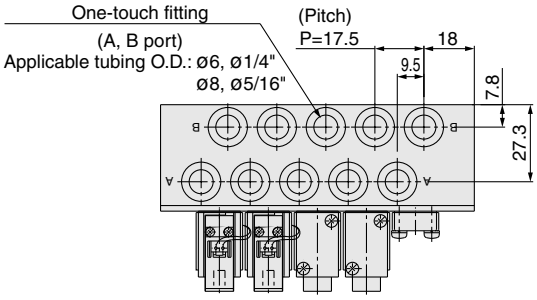

Stations n	**3** stations	**4**	**5**	**6**	**7**	**8**	**9**	**10**	**11**	**12**	**13**	**14**	**15**	**16** stations
L1	77	94.5	112	129.5	147	164.5	182	199.5	217	234.5	252	269.5	287	304.5
L2	67	84.5	102	119.5	137	154.5	172	189.5	207	224.5	242	259.5	277	294.5

Dimensions

SY7000: SS5Y7-42SA□-Stations-02□, C10, N11

With interface regulator (with gauge)

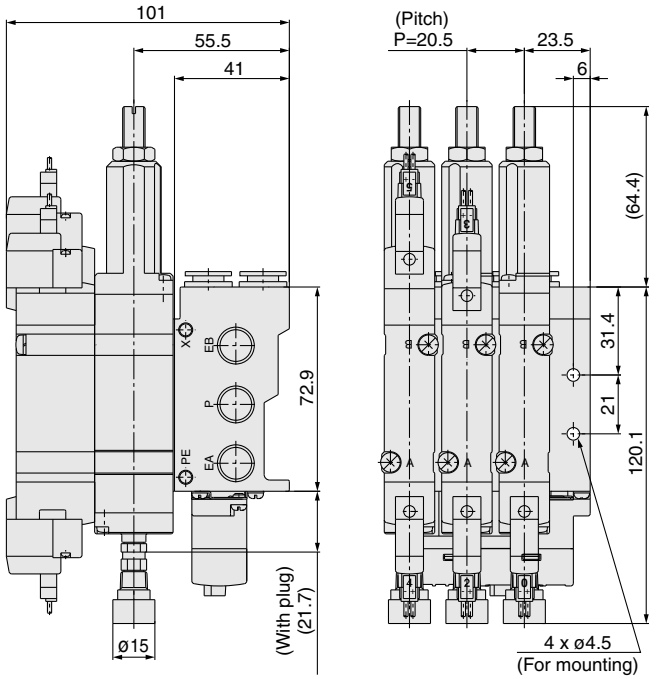

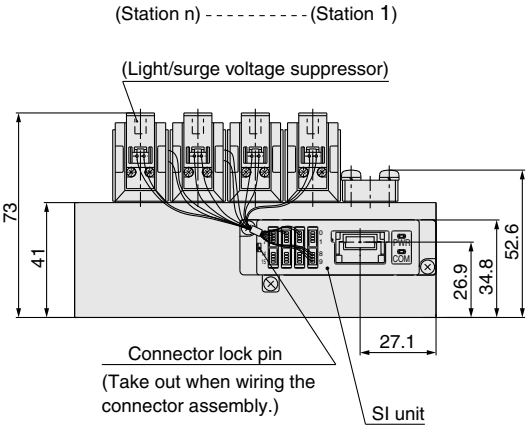

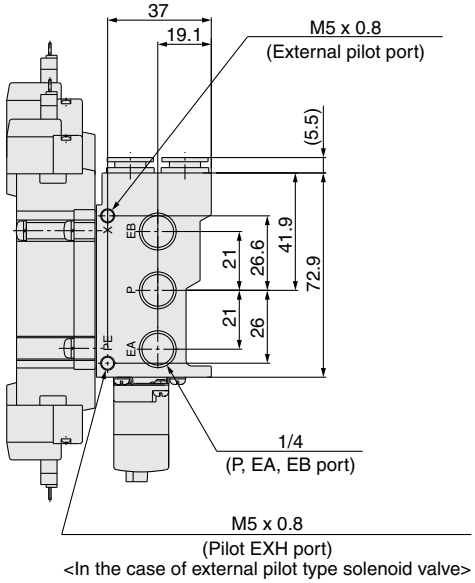

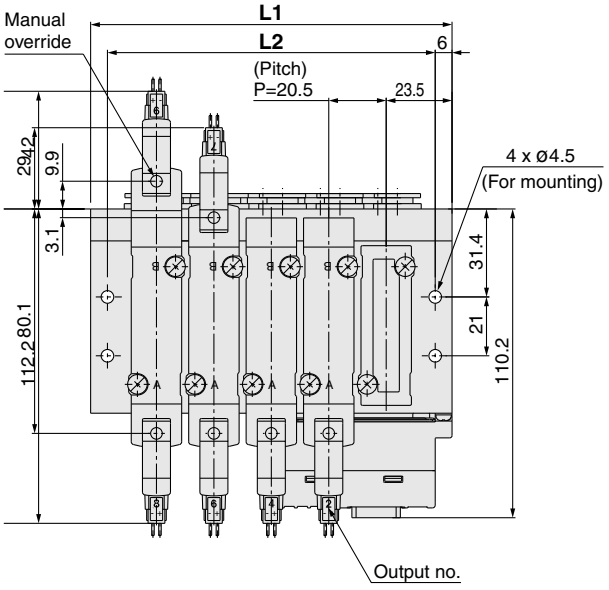

For 1/4

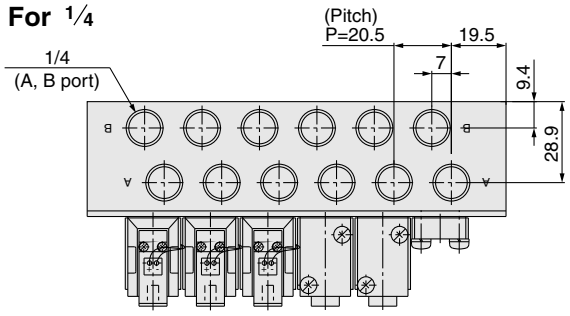

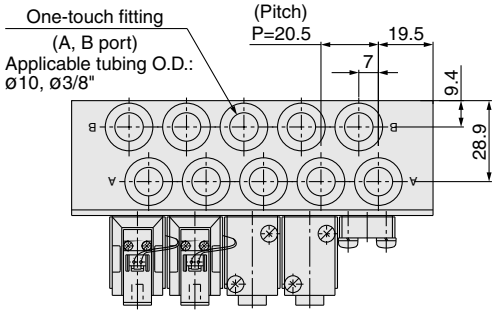

Stations n	3 stations	4	5	6	7	8	9	10	11	12	13	14	15	16 stations
L1	88	108.5	129	149.5	170	190.5	211	231.5	252	272.5	293	313.5	334	354.5
L2	76	96.5	117	137.5	158	178.5	199	219.5	240	260.5	281	301.5	322	342.5

EX510 Gateway-type Serial Transmission System Base Mounted Manifold/Stacking Type

Type 43SA

Series SY9000

How to Order Manifold

SS5Y9 − 43SA □ − 03 U □ − 02 □ − □ − Q

SI unit

—	NPN output (+COM.)
N	PNP output (–COM.)

Valve stations

Symbol	Stations	Note
03	3 stations	Double wiring Note 1)
⋮	⋮	
08	8 stations	
03	3 stations	Specified layout Note 2) (Compatible with 16 solenoid valves)
⋮	⋮	
16	16 stations	

• The number of the blanking plate assembly is also included.

Note 1) Double wiring: Use of a single solenoid will result in an unused control signal. If this is not desired, order with a specified layout.

Note 2) Specified layout: Indicate wiring specifications on the manifold specification sheet. (Note that double and 3 position valves cannot be used where single solenoid wiring has been specified.)

Option

—	Direct mounting
D	DIN rail mounting (With DIN rail)
DO	DIN rail mounting (Without DIN rail)
D*	When a longer DIN rail is desired than the specified stations, specify the station number to be required into * mark.

Thread type

—	Rc
F	G
N	NPT
T	NPTF

A, B port size

Thread piping

02	1/4
03	3/8

One-touch fitting (Metric size)

C8	One-touch fitting for ø8
C10	One-touch fitting for ø10
C12	One-touch fitting for ø12
M	Mixed

One-touch fitting (Inch size)

N9	One-touch fitting for ø5/16"
N11	One-touch fitting for ø3/8"
M	Mixed

• For the mixed specification, indicate separately on a manifold specification sheet.

SUP/EXH block assembly specifications

—	Standard/Internal pilot
R	External pilot
S	Internal pilot, Built-in silencer
RS	External pilot, Built-in silencer

P, R port outlets

U	U side	3 to 10 stations
D	D side	
B	Both sides	3 to 16 stations

SI unit part no.

Symbol	SI unit specifications	SI unit part no.
—	NPN output (+COM.)	EX510-S001
N	PNP output (–COM.)	EX510-S101

How to Order Manifold Assembly (Order Example)

Example

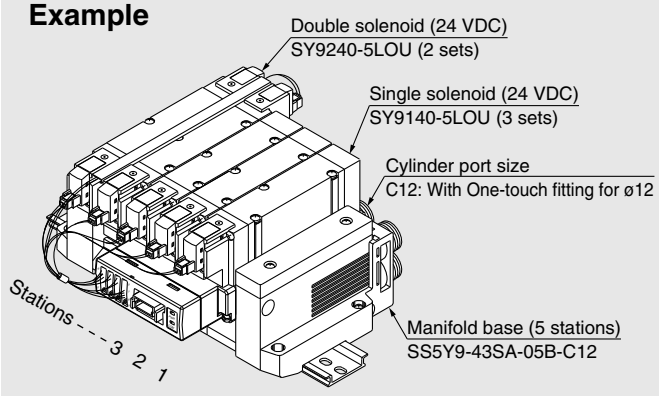

SS5Y9-43SA-05B-C12 ··· 1 set (43SA type 5-station manifold part no.)
*** SY9140-5LOU ····· 3 sets (Single solenoid part no.)**
*** SY9240-5LOU ····· 2 sets (Double solenoid part no.)**
→The asterisk denotes the symbol for assembly. Prefix to the part no. of the solenoid valve, etc.

Add the valve and option part number under the manifold base part number.
When entry of part numbers becomes complicated, indicate by the manifold specification sheet. For a manifold for an EX510, the length of the lead wire for a connector assembly depends on the number of stations. Therefore, the manifold assembly is shipped with the valves (including blanking plates) and connector assembly mounted on it, as the standard specification. Be sure to specify the part nos. of the solenoid valves to be mounted.

How to Order Valves

SY9 1 40 □ □ – 5 LO Z □ – □ – Q

Type of actuation

1	2 position single
2	2 position double
3	3 position closed centre
4	3 position exhaust centre
5	3 position pressure centre

Pilot specifications

—	Internal pilot
R	External pilot

Coil specifications

—	Standard
T	With power saving circuit

Rated voltage: 24 VDC

Light/Surge voltage suppressor

Z	With light/surge voltage suppressor
U	With light/surge voltage suppressor (non-polar type)

Manual override

—	Non-locking push type
D	Push-turn locking slotted type
E	Push-turn locking lever type

Made to Order

—	—
X90	Main valve fluororubber

Note) When ordering single unit of the base mounted type solenoid valve, the mounting screws and gaskets for the manifold are included.

Note 1) Power saving circuit is only available in the “Z” type.
Note 2) When the SI unit is the PNP output (-COM.), only the "U" type is available.

Dimensions

SY9000: SS5Y9-43SA□- Stations U□-□ 02/03 □, C8, N9/C10, N11/C12 (-D)

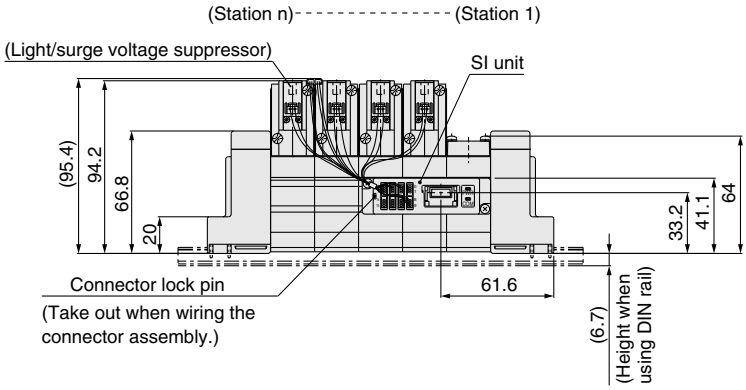

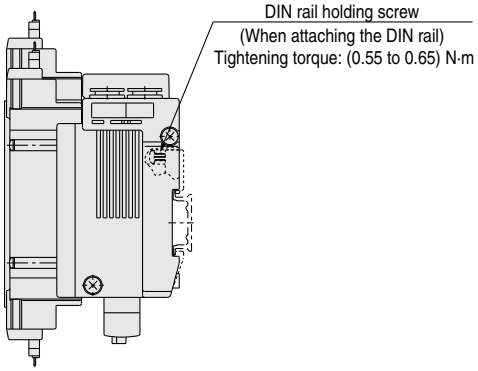

U side

D side

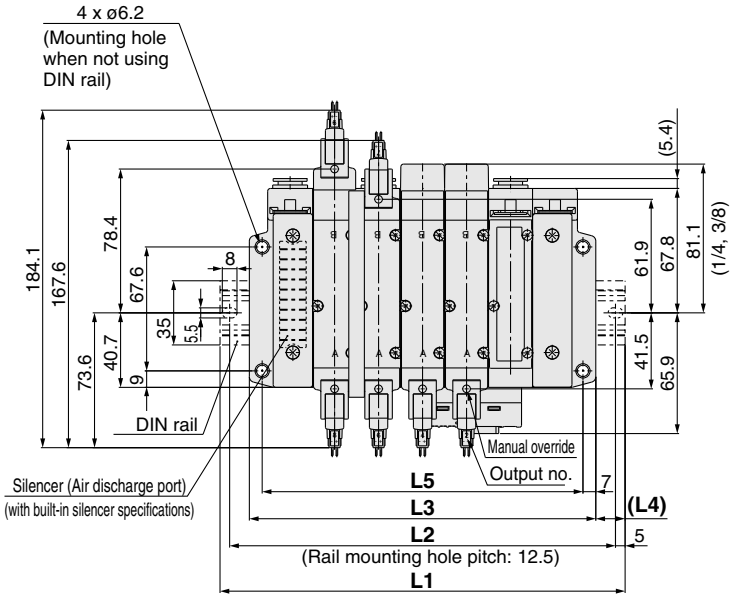

With External Pilot Specifications

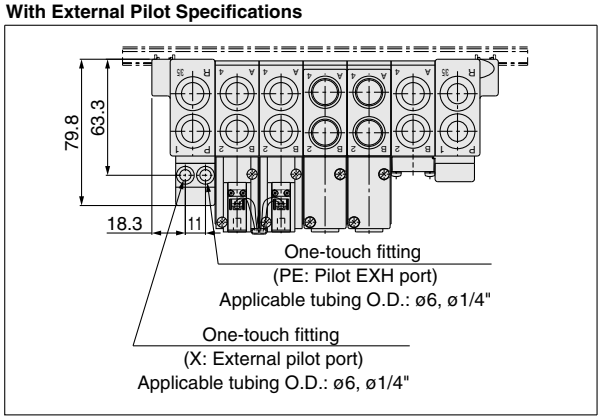

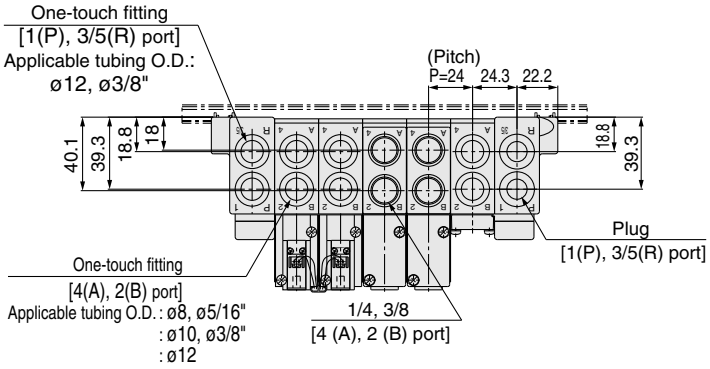

∗ When P, R port outlets are indicated on the D side, the P, R ports on the opposite side are plugged.
∗ Air discharge port on the built-in silencer type and the external pilot's extracting position are in the U side.

Stations n	**3** stations	**4**	**5**	**6**	**7**	**8**	**9**	**10** stations
L1	173	198	223	248	260.5	285.5	310.5	335.5
L2	162.5	187.5	212.5	237.5	250	275	300	325
L3	141	165	189	213	237	261	285	309
L4	16	16.5	17	17.5	12	12.5	13	13.5
L5	127	151	175	199	223	247	271	295

Dimensions

SY9000: SS5Y9-43SA□- Stations D□-□ 02/03 □, C8, N9/C10, N11/C12 (-D)

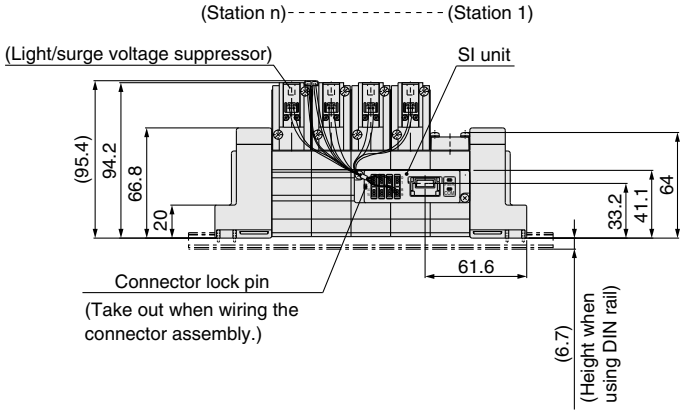

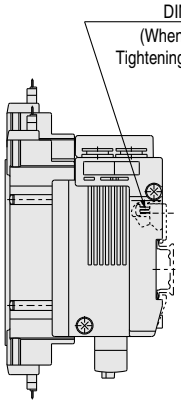

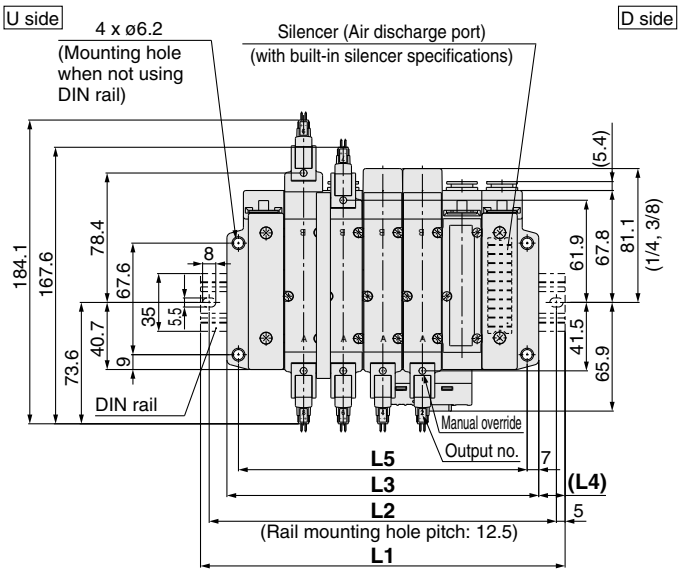

With External Pilot Specifications

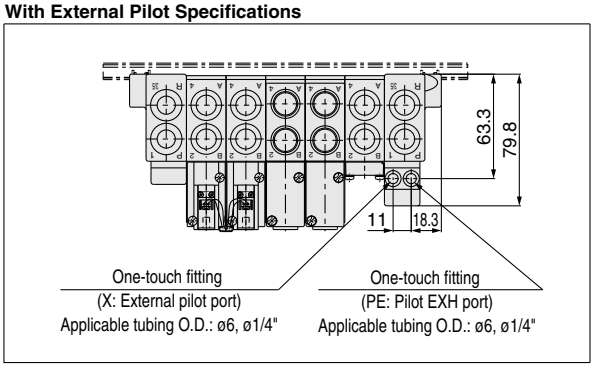

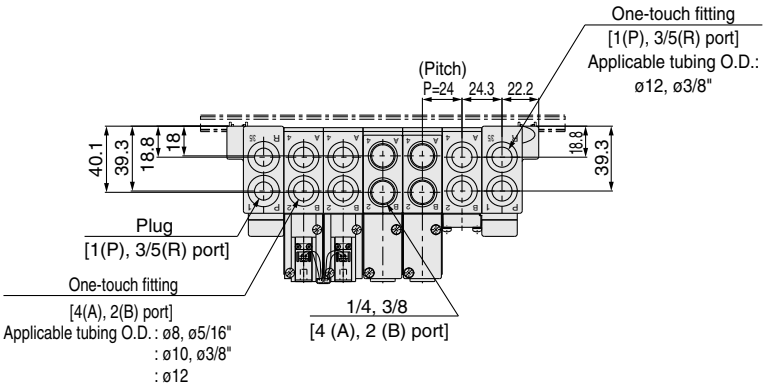

∗ When P, R port outlets are indicated on the D side, the P, R ports on the opposite side are plugged.
∗ Air discharge port on the built-in silencer type and the external pilot's extracting position are in the D side.

Stations n	3 stations	4	5	6	7	8	9	10 stations
L1	173	198	223	248	260.5	285.5	310.5	335.5
L2	162.5	187.5	212.5	237.5	250	275	300	325
L3	141	165	189	213	237	261	285	309
L4	16	16.5	17	17.5	12	12.5	13	13.5
L5	127	151	175	199	223	247	271	295

SY9000: SS5Y9-43SA□-Stations B□-□ 02/03 □, C8, N9/C10, N11/C12 (-D)

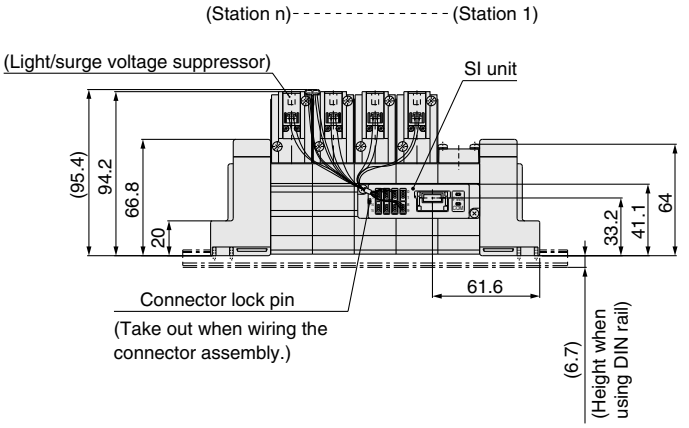

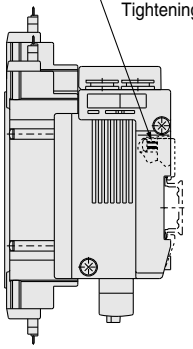

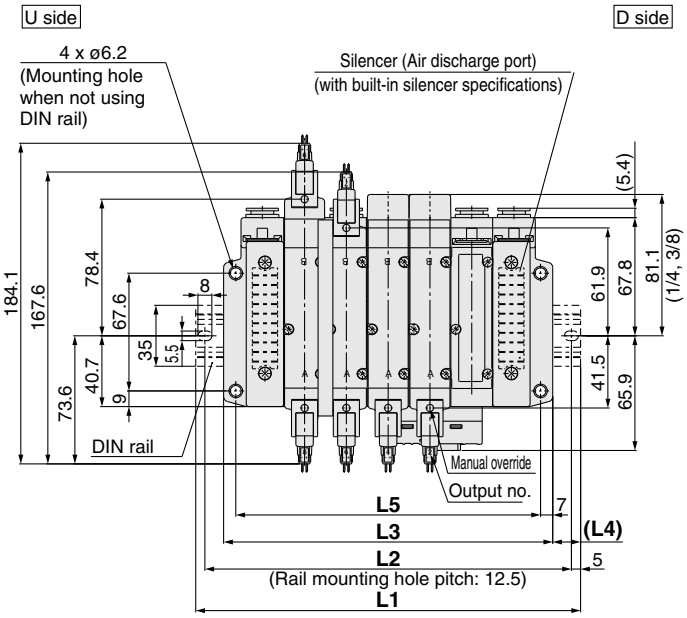

With External Pilot Specifications

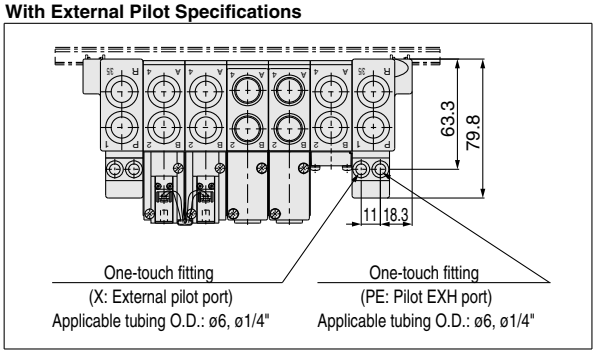

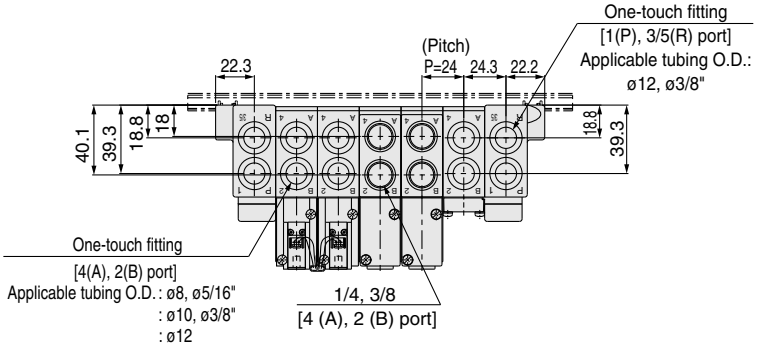

∗ When P, R port outlets are indicated on the B side, the P, R ports on the both sides are in the open state.
∗ Air discharge port on the built-in silencer type and the external pilot's extracting position are in the B side (both sides).

Stations n	3 stations	4	5	6	7	8	9	10	11	12	13	14	15	16 stations
L1	173	198	223	248	260.5	285.5	310.5	335.5	360.5	385.5	410.5	435.5	460.5	485.5
L2	162.5	187.5	212.5	237.5	250	275	300	325	350	375	400	425	450	475
L3	141	165	189	213	237	261	285	309	333	357	381	405	429	453
L4	16	16.5	17	17.5	12	12.5	13	13.5	14	14.5	15	15.5	16	16.5
L5	127	151	175	199	223	247	271	295	319	343	367	391	415	439

Manifold Option

■ Type 41, 42, 43 Blanking plate assembly

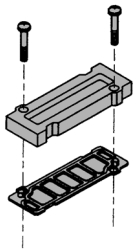

Series	Assembly part no.
SY3000	SY3000-26-9A-Q
SY5000	SY5000-26-20A-Q
SY7000	SY7000-26-22A-Q
SY9000	SY9000-26-2A-Q

■ Type 41P, 42P, 43P Blanking plate assembly

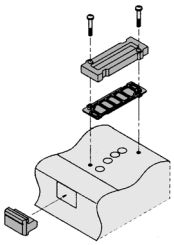

Series	Assembly part no.
SY3000	SY3000-26-10A-Q
SY5000	SY5000-26-21A-Q
SY7000	SY7000-26-23A-Q
SY9000	SY9000-26-4A-Q

■ Gasket assembly part no.

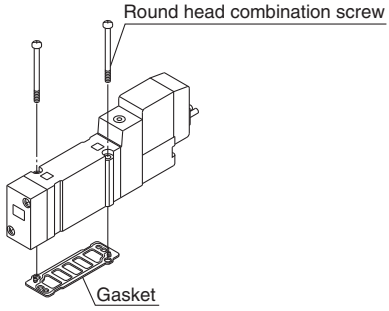

Series	Assembly part no.
SY3000	SY3000-GS-2
SY5000	SY5000-GS-2-Q
SY7000	SY7000-GS-2-Q
SY9000	SY9000-GS-2

Note) Gasket assembly consists of mounting screws and a gasket.

■ Individual SUP spacer assembly

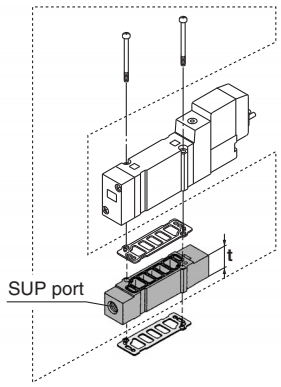

Series	Assembly part no.	Port size	t
SY3000	SY3000-38-2A-Q	M5	11
SY5000	SY5000-38-16∗A-Q	1/8	15
SY7000	SY7000-38-16∗A-Q	1/4	18
SY9000	SY9000-38-2∗A-Q	1/4	20

Note) • The SUP port of SY3000, 5000 and 7000 may be either on the lead wire side or on the end plate side. However, as the CE-compliant products (-Q) must be mounted in the specified direction, the port directions cannot be changed. (An assembly is shipped under the condition shown in the figure.)
• For the SY9000, it can only be used on the end plate side.

■ Individual EXH spacer assembly

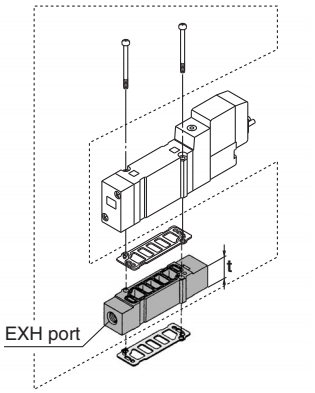

Series	Assembly part no.	Port size	t
SY3000	SY3000-39-2A-Q	M5	11
SY5000	SY5000-39-16∗A-Q	1/8	15
SY7000	SY7000-39-16∗A-Q	1/4	18
SY9000	SY9000-39-2∗A-Q	1/4	20

Note) • In case of 41P, 42P and 43P, for protection of the wiring unit section from drainage, piping at the EA port should be arranged so that it will not be directly exposed to exhaust from the valve. However, as the CE-compliant products (-Q) must be mounted in the specified direction, the port directions cannot be changed. (An assembly is shipped under the condition shown in the figure.)
• For the SY9000, it can only be used on the end plate side.

■ Individual SUP spacer assembly + Individual EXH spacer assembly (Double spacer)

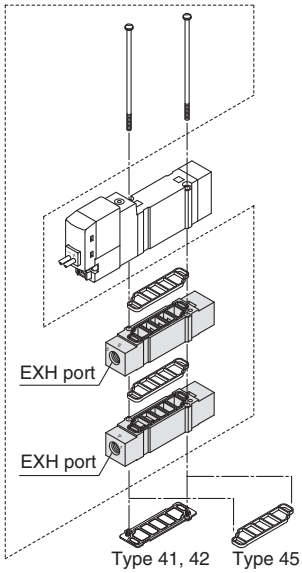

[●: Available X: Not available —: Nonapplicable manifold]

Series	Individual SUP + Individual EXP Assemble part no.	Port size	Applicable manifold types						
			41	41P	42	42P	45	45-A 45-NA	45□
SY3000	SY3000-120-2A-Q	M5	●	X	●	X	●	X	X
SY5000	SY5000-75-1∗A-Q	1/8	●	X	●	X	●	X	X
SY7000	SY7000-73-1∗A-Q	1/4	●	X	●	X	—	—	—

Note) The port on a spacer can be directed to the pilot valve side or end plate side. However, as the CE-compliant products (-Q) must be mounted in the specified direction, the port directions cannot be changed. For mounting the port to the pilot valve side, please make sure to connect the ports to protect the pilot valve wiring section from drainage.
The individual SUP spacer and EXH spacer can be mounted either on the upper side or lower side. (The above illustration shows the condition when the product is shipped out from a factory.)

⚠ Caution

Mounting screw tightening torques

M2: 0.16 N·m
M3: 0.8 N·m
M4: 1.4 N·m

∗ Thread type

-	Rc
F	G
N	NPT
T	NPTF

⚠ Warning

When mounting a valve or spacer on the manifold base or sub-plate, etc., those mounting directions are determined. If mounted in the wrong direction, the equipment to be connected may cause malfunction. Refer to external dimensions, and then mount it.

Manifold Option

■ **Connector assembly**

For single solenoid (SY3000-37-81A-□-N)

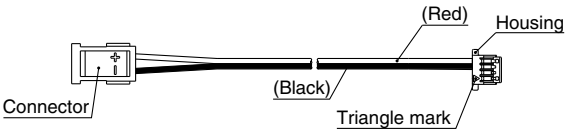

For double solenoid (SY3000-37-81A-□-□)

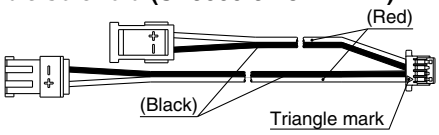

Connector assembly order no. (Can be used for the manifold without a specified layout (8 stations or less))
Integrated type

Model	Part no.	Connector mounting position
SS5Y3-42SA	SY3000-37-81A-3-N	Single: For 1 to 4 stations
	SY3000-37-81A-3-6	Double/3 position: For 1 to 4 stations
	SY3000-37-81A-2-N	Single: For 5 to 8 stations
	SY3000-37-81A-2-4	Double/3 position: For 5 to 8 stations
SS5Y5-42SA	SY3000-37-81A-3-N	Single: For 1 to 8 stations
	SY3000-37-81A-3-6	Double/3 position: For 1 to 8 stations
SS5Y7-42SA	SY3000-37-81A-3-N	Single: For 1 to 4 stations
	SY3000-37-81A-3-6	Double/3 position: For 1 to 4 stations
	SY3000-37-81A-4-N	Single: For 5 to 8 stations
	SY3000-37-81A-4-7	Double/3 position: For 5 to 8 stations

Note) The above is for the station addition or maintenance. When ordering a connector assembly separately, a number would not be printed on the connector.

■ **Connector assembly**
SY3000-37-80A-□

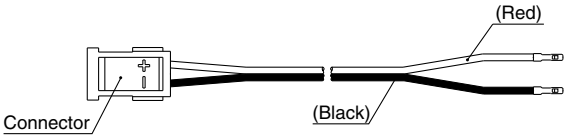

■ **Housing (8 pcs./set)**
SY3000-44-3A

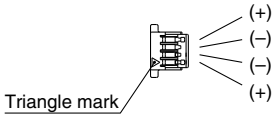

Connector assembly order no. (Can be used for the manifold with a specified layout)

Model	Part no.		Connector mounting position
SS5Y3-42SA	SY3000-37-80A-3	For A side	For 1 to 8 stations
	SY3000-37-80A-6	For B side	
	SY3000-37-80A-4	For A side	For 9 to 16 stations
	SY3000-37-80A-7	For B side	
SS5Y5-42SA	SY3000-37-80A-3	For A side	For 1 to 8 stations
	SY3000-37-80A-6	For B side	
	SY3000-37-80A-7	For A side	For 9 to 16 stations
	SY3000-37-80A-9	For B side	
SS5Y7-42SA	SY3000-37-80A-4	For A side	For 1 to 8 stations
	SY3000-37-80A-7	For B side	
	SY3000-37-80A-8	For A side	For 9 to 16 stations
	SY3000-37-80A-11	For B side	
SS5Y9-43SA	SY3000-37-80A-6	For A side	For 1 to 8 stations
	SY3000-37-80A-11	For B side	
	SY3000-37-80A-9	For A side	For 9 to 12 stations
	SY3000-37-80A-14	For B side	
	SY3000-37-80A-13	For A side	For 13 to 16 stations
	SY3000-37-80A-18	For B side	

Note 1) The above is for station addition or maintenance. When ordering a connector assembly separately, a number will not be printed on the connector.
Note 2) After inserting the connector assembly into the housing, be sure to confirm that the lead wire will not come off by lightly pulling the wire. Furthermore, do not reuse the lead wire after it has been inserted and removed.
Note 3) Wiring is set longer than the actual wiring distance.

Manifold Option

▪ SUP blocking disk (For SY9000)

By installing a SUP blocking disk in the pressure supply passage of a manifold valve, it is possible to supply two or more different high and low pressures to one manifold.



Series	No.
SY9000	SY9000-57-1A

▪ EXH blocking disk (For SY9000)

By installing an EXH blocking disk in the exhaust passage of a manifold valve, it is possible to divide the valve's exhaust so that it does not affect another valve. (Two blocking disks are needed to divide both exhausts.)



Series	No.
SY9000	SY9000-57-1A

▪ Label for block disk (For SY9000)

The labels shown below are used on manifold stations containing SUP/EXH block disk(s) to show their location. (3 pcs. each)

VZ3000-123-1A

Label for SUP block disk Label for EXH block disk Label for SUP/EXH block disk

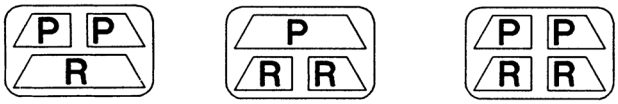

Note) When a block disk is concurrently ordered by specifying on the manifold specification sheet, etc., a label will be stuck on the position where block disk is mounted.

▪ Cable assembly

AXT100-FC26- 1 2 3

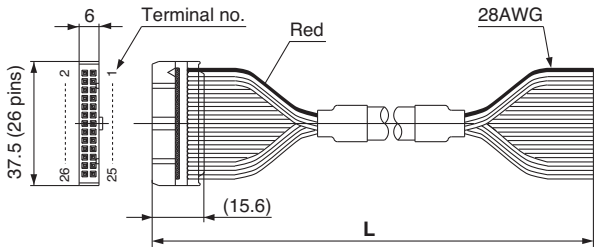

Flat ribbon cable connector

Cable length (**L**)	Assembly part no.
	26 pins
1.5 m	AXT100-FC26-1
3 m	AXT100-FC26-2
5 m	AXT100-FC26-3

∗ When using a standard commercial connector, use a 26-pin type connector conforming to MIL-C-83503 with strain relief.
∗ Cannot be used for movable wiring
∗ Lengths other than the above are also available. Please contact SMC for details.

Connector Manufacturers' Example

- HIROSE ELECTRIC CO., LTD.
- 3M Japan Limited
- Fujitsu Limited
- Japan Aviation Electronics Industry, Limited
- J.S.T. Mfg. Co., Ltd.
- Oki Electric Cable Co., Ltd.

▪ Silencer with One-touch fitting (For SY9000)

The silencer plugs directly into the One-touch fittings of the manifold R (exhaust) port.

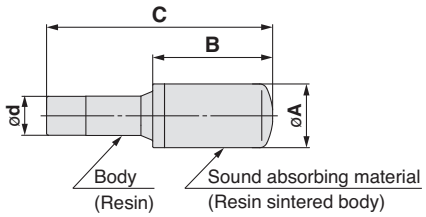

For Series	Model	Effective area mm²	A	B	C
SY9000 (ø12)	AN30-C12	41	ø20	43.5	71.5

▪ DIN Rail Dimensions/Weight for SY9000

VZ1000 – 11 – 4 – □

● Refer to L dimensions

∗ Fill in □ with an appropriate no. listed on the table of DIN rail dimensions shown below.

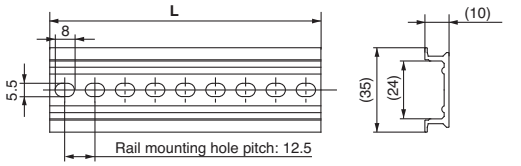

No.	0	1	2	3	4	5	6	7	8	9
L Dimension	98	110.5	123	135.5	148	160.5	173	185.5	198	210.5
Weight (g)	24.8	28	31.1	34.3	37.4	40.6	43.8	46.9	50.1	53.3
No.	10	11	12	13	14	15	16	17	18	19
L Dimension	223	235.5	248	260.5	273	285.5	298	310.5	323	335.5
Weight (g)	56.4	59.6	62.7	65.9	69.1	72.2	75.4	78.6	81.7	84.9
No.	20	21	22	23	24	25	26	27	28	29
L Dimension	348	360.5	373	385.5	398	410.5	423	435.5	448	460.5
Weight (g)	88	91.2	94.4	97.5	100.7	103.9	107	110.2	113.3	116.5
No.	30	31	32	33	34	35	36	37	38	
L Dimension	473	485.5	498	510.5	523	535.5	548	560.5	573	
Weight (g)	119.7	122.8	126	129.2	132.3	135.5	138.6	141.8	145	

Note) • For DIN rail, refer to page 229.
• Refer to **L1** dimension on pages starting with pages 106 through 108 for lengths that correspond to the number of manifold stations.

▪ Plug

These are inserted in unused cylinder ports and SUP, EXH ports.
Purchasing order is available in units of 10 pieces.

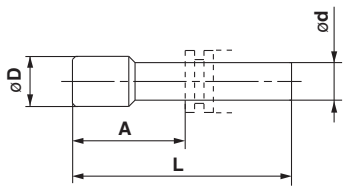

Dimensions

Applicable fittings size ø**d**	Model	A	L	D
4	**KQ2P-04**	16	32	6
6	**KQ2P-06**	18	35	8
8	**KQ2P-08**	20.5	39	10
10	**KQ2P-10**	22	43	12
12	**KQ2P-12**	24	44.5	14
1/8"	**KQ2P-01**	16	31.5	5
5/32"	**KQ2P-03**	16	32	6
1/4"	**KQ2P-07**	18	35	8.5
5/16"	**KQ2P-09**	20.5	39	10
3/8"	**KQ2P-11**	22	43	11.5

Manifold Option

▪ How to Order Interface Regulator

Series SY3000

ARBY3000—05—P—2

Pressure gauge connection port

05	Pressure gauge (G15-10-01)
M1	Plug (M-5P)

Regulating port

P	P port
A1	A port (P controlled type, A port regulation)
B1	B port (P controlled type, B port regulation)

Note) In the case of mounting an ARBY3000 with a pressure gauge onto a manifold, use caution that the part numbers are different between the odd no. stations and the even no. stations to avoid the gauges from interfering with each other.

Series SY5000

ARBY5000—00—P—2

Pressure gauge connection port

00	Pressure gauge (G15-10-01)
M1	Plug (M-5P)

Regulating port

P	P port
A1	A port (P controlled type, A port regulation)
B1	B port (P controlled type, B port regulation)

ARBY3000-05-□-2
(For odd number stations)

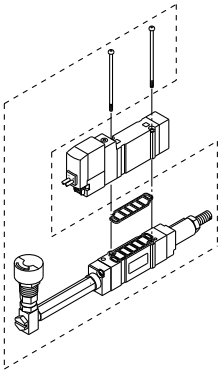

ARBY3000-06-□-2
(For even number stations)

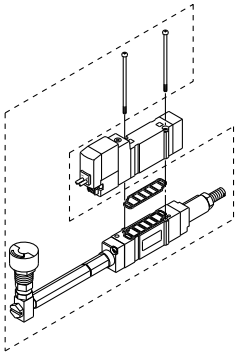

ARBY3000-M1-□-2

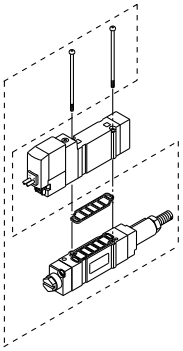

ARBY5000-00-□-2

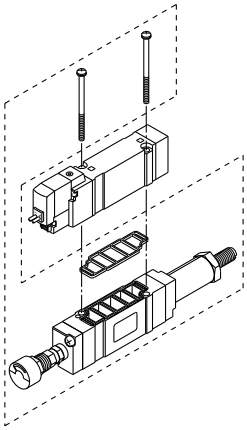

ARBY5000-M1-□-2

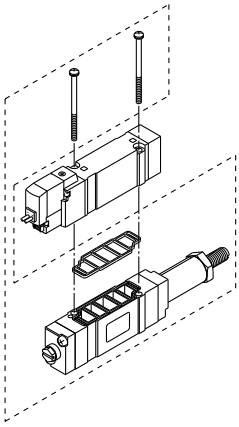

Series SY7000

ARBY7000—00—P—2

Pressure gauge connection port

00	Pressure gauge (G15-10-01)
M1	Plug (M-5P)

Regulating port

P	P port
A1	A port (P controlled type, A port regulation)
B1	B port (P controlled type, B port regulation)

ARBY7000-00-□-2

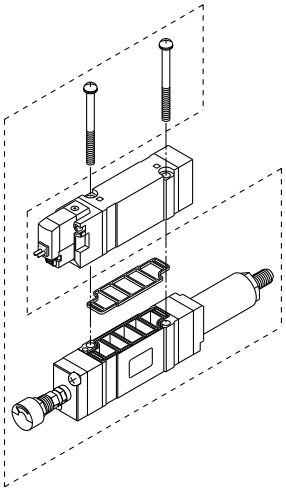

ARBY7000-M1-□-2

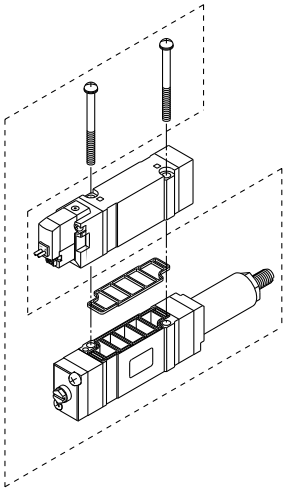

Accessory

Series	Round head combination screw	Gasket
ARBY3000	SY3000-23-10 (M2336)	SX3000-57-4
ARBY5000	M3 x 48.5, Matt nickel plated	SX5000-57-6
ARBY7000	M4 x 57, Matt nickel plated	SX7000-57-4

⚠ Caution

Mounting screw tightening torques

M2: 0.16 N·m
M3: 0.8 N·m
M4: 1.4 N·m

Base Mounted Manifold Exploded View

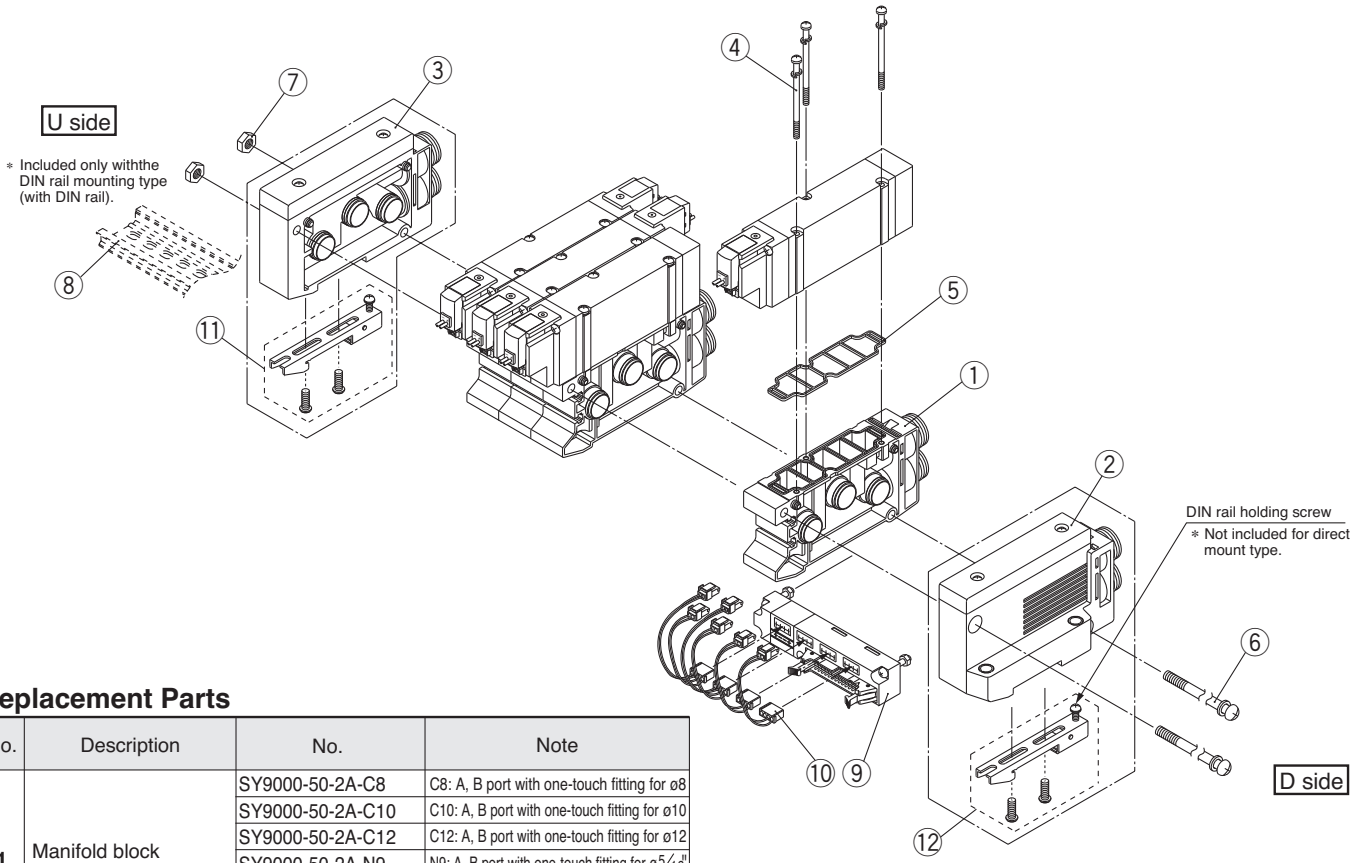

Replacement Parts

No.	Description	No.	Note
1	Manifold block assembly	SY9000-50-2A-C8	C8: A, B port with one-touch fitting for ø8
		SY9000-50-2A-C10	C10: A, B port with one-touch fitting for ø10
		SY9000-50-2A-C12	C12: A, B port with one-touch fitting for ø12
		SY9000-50-2A-N9	N9: A, B port with one-touch fitting for ø5/16"
		SY9000-50-2A-N11	N11: A, B port with one-touch fitting for ø3/8"
		SY9000-50-2A-02∗	02: A, B port 1/4 (∗ thread type)
		SY9000-50-2A-03∗	03: A, B port 3/8 (∗ thread type)
4	Round head combination screw	SY9000-18-2	M3 x 42, Matt nickel plated
5	Gasket	SY9000-11-2	
6	Tension bolt	SY9000-23-□	□ at the end of part number corresponds with the number of manifold station. Specify the same
7	Hexagon nut	SY9000-25-1	
8	DIN rail	VZ1000-11-4-□	Refer to page 110.
9	Wiring unit assembly	SY9000-36-□A	□ at the end of part number corresponds with the number of manifold station. Specify the same number as the number of stations (4 to 12 stations)
10	Connecter assembly	SY9000-37-□□	Refer to page 104.
11	Lead wire cover	SY9000-41-1	
12	Clamp sub assembly	SY9000-30-1A	Included only with the DIN rail mounting type.

⑪ How to assemble lead wire cover

Lead wire cover is only usable for double solenoid valves. Lead wire is inserted into the lead wire cover as magnifying figure, then push it until it touches the valve body.

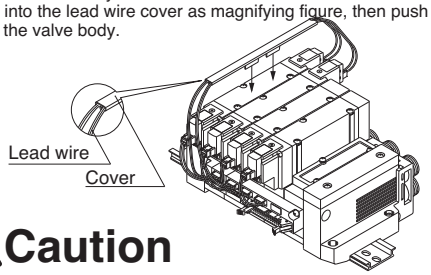

⚠Caution

For type 43P (Flat cable manifold) of Series SY9000, the lead wire cover is attached for bundling the lead wires for each solenoid. In case such as adding double solenoid valve, etc., order separately lead wire cover as well.

② SUP/EXH block assembly no. (D side mounting)

- Direct mount type: **SY9000-70-□A-□**
- DIN rail mount type: **SY9000-72-□A-□**

P, R port

C12	One-touch fitting for ø12
N11	One-touch fitting for ø3/8"
00	Plug∗1

∗1 Internal pilot type only

Specifications

1	Internal pilot type
3	External pilot type
4	Internal pilot / Built-in silencer type
5	External pilot / Built-in silencer type

③ SUP/EXH block assembly no. (U side mounting)

- Direct mount type: **SY9000-71-□A-□**
- DIN rail mount type: **SY9000-73-□A-□**

P, R port

C12	One-touch fitting for ø12
N11	One-touch fitting for ø3/8"
00	Plug∗1

∗1 Internal pilot type only

Specifications

1	Internal pilot type
3	External pilot type
4	Internal pilot / Built-in silencer type
5	External pilot / Built-in silencer type

How to Increase Manifold Bases (Series SY9000 only) Manifold case can be added at any location.

When a type 43 manifold base is added, tension bolts as well as manifold block assembly will be required. Order the tension bolt suitable for the stations after a station was increased (decreased), since the length of a tension bolt differs by the number of stations. (For changing the number of stations for a type 43P manifold, wiring unit for the stations and lead assembly will be required.)

1. Loosen the tension bolts connecting the manifold base, and pull out both of 2 tension bolts.

   (When equipped with a DIN rail, loosen one DIN rail holding screw on either U side or D side.)

2. Separate the blocks at the location where station expansion is desired.
3. Mount additional manifold block assembly.
4. Press block-to-block so that there's no gap. After connection, insert a tension bold for desired stations and then tighten it.

   ⚠ **Caution** (Tightening torque: 2.9 N·m)

   (When equipped with a DIN rail, be sure to tighten the DIN rail holding screws after tightening the tension bolts. Tightening torque: 1.4 N·m)

⚠ Caution

1. Be sure to shut off the power and air supplies before disassembly. Furthermore, since air may remain inside the actuator, piping and manifold, confirm that the air is completely exhausted before performing any work.
2. When disassembly and assembly are performed, air leakage may result if connections between blocks and tightening of the end block's holding screw, is inadequate.
3. By adding wiring unit assembly to type 43 manifold, it can be changed to type 43P manifold, too.

How to Replace A, B Port Fitting Assembly

By replacing manifold block fitting assemblies or the threaded port block assembly of a type 43(P) manifold, the port size of the A and B ports can be changed. To replace these parts, remove the clip with a flat head screwdriver after the valve has been removed. Insert the fitting assemblies or threaded port block assembly, and then reinsert the clip so that it does not protrude from the manifold block.

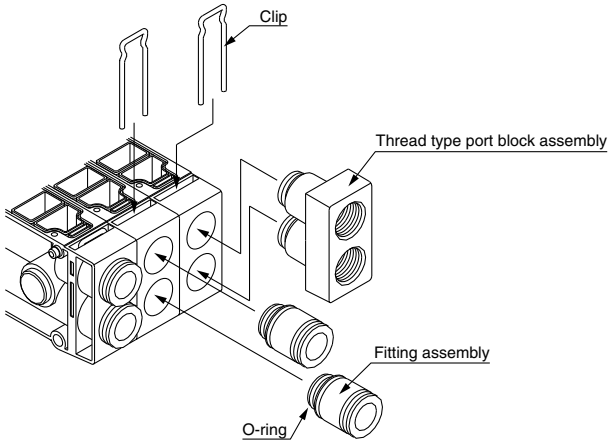

Fitting Assembly Part No.

Port size	No.	Note
One-touch fitting assembly for ø8	VVQ4000-50B-C8	
One-touch fitting assembly for ø10	VVQ4000-50B-C10	
One-touch fitting assembly for ø12	VVQ4000-50B-C12	
One-touch fitting for ø 5/16"	VVQ4000-50B-N9	
One-touch fitting for ø 3/8"	VVQ4000-50B-N11	
1/4 threaded type port block assembly	SY9000-58A-02∗	–∗ at the end of part number denotes the thread type.
3/8 threaded type port block assembly	SY9000-58A-03∗	–∗ at the end of part number denotes the thread type.
Plug assembly	SY9000-62-1A	

Note 1) Be careful to avoid damage or contamination of O-rings, as this can cause air leakage.
Note 2) Although replacing the One-touch fittings of P, R port is possible, use caution in the case where solenoid valves are used at the same time when using the smaller sized fittings than the standard size (ø12). Because they may not be able to supply or exhaust air sufficiently in comparison to the valve performance. Also, although the fittings used for A, B port are the same as for P, R port, it is not possible to use the threaded type port block assembly.

5 Port Solenoid Valve
Series SY3000/5000
Base Mounted
Stacking Type/DIN Rail Mounted
Individual Wiring

Type 45

How to Order Manifold

SS5Y 3 – 45 – 05 U C6 [ ] -Q

Series

3	SY3000
5	SY5000

Valve stations

02	2 stations
⋮	⋮
20	20 stations

SUP/EXH block assembly mounting position

Symbol	Mounting position	Applicable no. of stations
U	U side	2 to 10 stations
D	D side	
B	(Both sides)	2 to 20 stations
M*	Special specifications	

* For special specifications, indicate separately by the manifold specification sheet.

A, B port size

One-touch fitting (Metric size)

Symbol	Port size	Applicable series
C4	One-touch fitting for ø4	SY3000
C6	One-touch fitting for ø6	
M	Mixed	
C4	One-touch fitting for ø4	SY5000
C6	One-touch fitting for ø6	
C8	One-touch fitting for ø8	
M	Mixed	

One-touch fitting (Inch size)

Symbol	Port size	Applicable series
N3	One-touch fitting for ø5/32"	SY3000
N7	One-touch fitting for ø1/4"	
M	Mixed	
N3	One-touch fitting for ø5/32"	SY5000
N7	One-touch fitting for ø1/4"	
N9	One-touch fitting for ø5/16"	
M	Mixed	

* In the case of mixed specifications (M), indicate separately on the manifold specification sheet.

Option

When a longer DIN rail is desired than the specified stations, specify the station number to be required. (20 stations at maximum)

For external pilot specifications and built-in silencer, refer to page 205.

How to Order Valve Manifold Assembly (Example)

Example

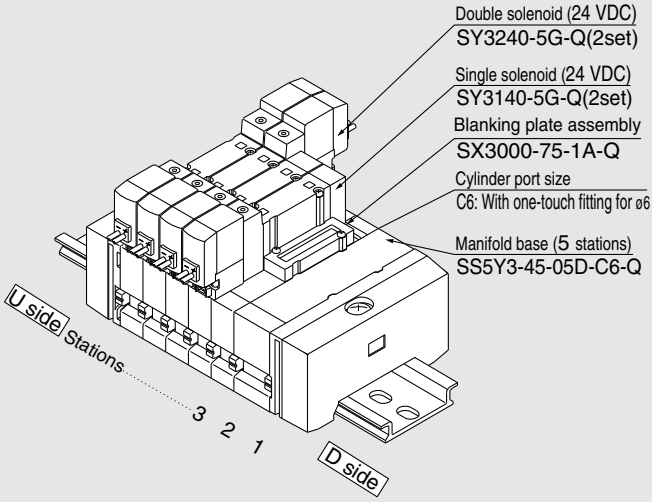

SS5Y3-45-05D-C6-Q **1 set (Type 45, 5 station manifold base part no.)**
***SX3000-75-1A-Q** **1 set (Blanking plate assembly part no.)**
***SY3140-5G-Q** **2 sets (Single solenoid part no.)**
***SY3240-5G-Q** **2 sets (Double solenoid part no.)**

→ The asterisk denotes the symbol for assembly. Prefix it to the part nos. of the solenoid valve, etc.

The valve arrangement is numbered as the 1st. station from D side regardless of the mounting position of SUP/EXH block assembly. In ordering, specify the part nos. in the order from the 1st. station on D side. Besides, when the arrangement will be complicated, fill out the manifold specification sheet to instruct us.

How to Order Valve

SY 5 2 40 □ — 5 L □ □ □ -Q

Series

3	SY3000
5	SY5000

Type of actuation

1	2 position single
2	2 position double
3	3 position closed center
4	3 position exhaust center
5	3 position pressure center

Coil specifications

-	Standard
T	With power saving circuit (24, 12 VDC only)

∗ Power saving circuit is not available in the case of D, DO or W□ type.

Rated voltage

For DC

5	24 VDC
6	12 VDC
V	6 VDC
S	5 VDC
R	3 VDC

AC (Hz) 50/60

1	100 VAC
2	200 VAC
3	110 VAC [115 VAC]
4	220 VAC [230 VAC]

∗ DC specifications of type D and DO is only available with 12 and 24 VDC.
∗ AC specification is only available with D and DO type.
∗ D and DO only available for SY5000.

Manual override

-	Non-locking push type
D	Push-turn locking slotted type
E	Push-turn locking lever type

Made to Order

—	—
X90	Main valve fluororubber

Light/surge voltage suppressor

Electrical entry for G, H, L, M, W

-	Without light/surge voltage suppressor
S	With surge voltage suppressor
Z	With indicator light and surge voltage suppressor
R	With surge voltage suppressor (Non-polar type)
U	With light/surge voltage suppressor (Non-polar type)

∗ Power saving circuit is only available in the "Z" type.

Electrical entry for D (SY5000 only)

-	Without light/surge voltage suppressor
S	With surge voltage suppressor (Non-polar type)
Z	With light/surge voltage suppressor (Non-polar type)

∗ DOZ is not available.
∗ For AC voltage valves there is no “S” option. It is already built-in to the rectifier circuit.

Electrical entry

24, 12, 6, 5, 3 VDC			24, 12 VDC/ 100, 110, 200, 220 VAC	24, 12, 6, 5, 3 VDC
Grommet	**L plug connector**	**M plug connector**	**DIN terminal**	**M8 connector** ∗
G: Lead wire length 300 mm **H:** Lead wire length 600 mm	**L:** With lead wire (Length 300 mm) **LN:** Without lead wire **LO:** Without connector	**M:** With lead wire (Length 300 mm) **MN:** Without lead wire **MO:** Without connector	**(SY5000 only)** **D:** With connector **DO:** Without connector	**WO:** Without connector cable **W□:** With connector cable Note 1)

∗ LN, MN type: with 2 sockets.
∗ D and DO only available for SY5000.
∗ DIN terminal type “Y” which conforms to EN-175301-803C (former DIN43650C) is also available. For details, refer to page 227.
∗ For connector cable of M8 connector, refer to page 230.
∗ Connector M8 type “WA” conforming to IEC 60947-5-2 standard, is also available. For details, see page 211.
Note 1) Enter the cable length symbols in □. Please be sure to fill in the blank referring to page 231.

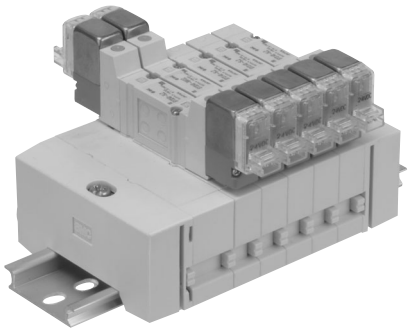

Manifold Specifications

Model		SS5Y3-45	SS5Y5-45
Applicable valve		SY3□40	SY5□40
Manifold type		Stacking type/DIN rail mounted	
P (SUP)/R (EXH)		Common SUP, Common EXH	
Valve stations		2 to 20 stations Note 1)	
A, B port Porting specifications	Location	Base	
	Direction	Side	
Port size	P, R port	C8 (One-touch fitting for ø8)	C10 (One-touch fitting for ø10)
	A, B port	C4 (One-touch fitting for ø4) C6 (One-touch fitting for ø6)	C4 (One-touch fitting for ø4) C6 (One-touch fitting for ø6) C8 (One-touch fitting for ø8)
Manifold base weight W (g), n: Stations		2 to 10 stations: W = 22n + 118 11 to 20 stations: W = 22n + 140	2 to 10 stations: W = 47n + 156 11 to 20 stations: W = 47n + 190

Note 1) For more than 11 stations, supply pressure to P port on both sides and exhaust from R port on both sides.

Flow Characteristics

Model	Port size		Flow characteristics							
	1 ,5 ,3 (P ,EA ,EB)	4 ,2 (A ,B)	1 → 4/2 (P → A/B)				4/2 → 5/3 (A/B → EA/EB)			
			C (dm³/(s·bar))	b	Cv	Q[ℓ/min(ANR)]*	C (dm³/(s·bar))	b	Cv	Q[ℓ/min(ANR)]*
SS5Y3-45	C8	C6	0.88	0.21	0.22	212	0.95	0.18	0.22	225
SS5Y5-45	C10	C8	2.2	0.24	0.53	539	2.5	0.18	0.58	592

Note) The value is for manifold base with 5 stations and individually operated 2 position type.

* These values have been calculated according to ISO6358 and represent the flow rate measured in standard conditions at an upstream pressure of 0.6 MPa (relative pressure) and a differential pressure of 0.1MPa.

Manifold Option

▪Individual SUP spacer assembly

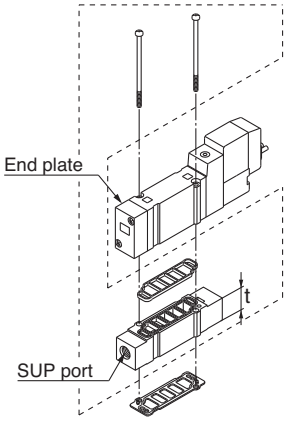

Series	Assembly part no.	Port size	t
SY3000	SY3000-38-2A-Q	M5	11
SY5000	SY5000-38-16∗A-Q	1/8	15

Note) The SUP port may be either on the lead wire side or on the end plate side. However, as the CE-compliant products (-Q) must be mounted in the specified direction, the port directions cannot be changed. (An assembly is shipped under the condition shown in the figure.)

▪Individual EXH spacer assembly

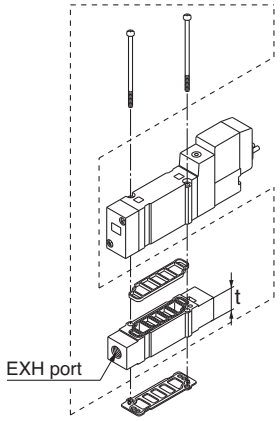

Series	Assembly part no.	Port size	t
SY3000	SY3000-39-2A-Q	M5	11
SY5000	SY5000-39-16∗A-Q	1/8	15

Note) The EXH port may be either on the lead wire side or on the end plate side. However, as the CE-compliant products (-Q) must be mounted in the specified direction, the port directions cannot be changed. (An assembly is shipped under the condition shown in the figure.)

▪Blanking plate assembly

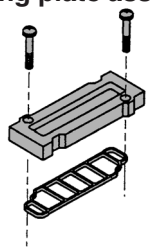

Series	Assembly part no.
SY3000	SX3000-75-1A-Q
SY5000	SX5000-76-5A-Q

∗ **Thread type**

-	Rc
F	G
N	NPT
T	NPTF

⚠ Caution

Mounting screw tightening torques

M2: 0.16 N·m
M3: 0.8 N·m
M4: 1.4 N·m

▪Dimensions/DIN rail

VZ1000 – 11 – 1 – □

● Refer to L dimensions

∗ Fill in □ with an appropriate no. listed on the table of DIN rail dimensions shown below.

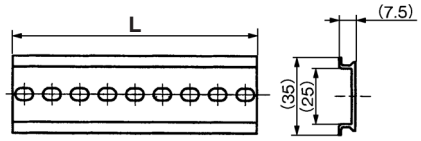

No.	0	1	2	3	4	5	6	7	8	9	10
L Dimension	98	110.5	123	135.5	148	160.5	173	185.5	198	210.5	223
No.	11	12	13	14	15	16	17	18	19	20	21
L Dimension	235.5	248	260.5	273	285.5	298	310.5	323	335.5	348	360.5
No.	22	23	24	25	26	27	28	29	30	31	32
L Dimension	373	385.5	398	410.5	423	435.5	448	460.5	473	485.5	498
No.	33	34	35	36	37	38	39	40	41	42	43
L Dimension	510.5	523	535.5	548	560.5	573	585.5	598	610.5	623	635.5
No.	44	45	46	47	48	49	50	51	52	53	54
L Dimension	648	660.5	673	685.5	698	710.5	723	735.5	748	760.5	773
No.	55	56	57	58	59	60	61	62	63	64	65
L Dimension	785.5	798	810.5	823	835.5	848	860.5	873	885.5	898	910.5
No.	66	67	68	69	70	71					
L Dimension	923	935.5	948	960.5	973	985.5					

∗ Refer to L1 dimension on pages starting with page 121 for lengths that correspond to the number of manifold stations.

▪SUP blocking disk

By installing a SUP blocking disk in the pressure supply passage of a manifold valve, it is possible to supply two or more different high and low pressures to one manifold.



Series	No.
SY3000	SX3000-77-1A
SY5000	SX5000-77-1A

▪EXH blocking disk

By installing an EXH blocking disk in the exhaust passage of a manifold valve, it is possible to divide the valve's exhaust so that it does not affect another valve. (Two blocking disks are needed to divide both exhausts.)



Series	No.
SY3000	SX3000-77-1A
SY5000	SX5000-77-1A

▪Label for block disk

The labels shown below are used on manifold stations containing SUP/EXH blocking disk(s) to show their location. (3 pcs. each)

VZ3000-123-1A

Label for SUP block disk

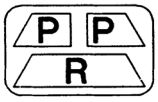

Label for EXH block disk

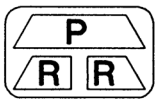

Label for SUP/EXH block disk

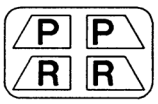

Note) When a block disk is concurrently ordered by specifying on the manifold specification sheet, etc., a label will be stuck on the position where block disk is mounted.

▪Silencer with One-touch fitting

The silencer plugs directly into the One-touch fittings of the manifold.

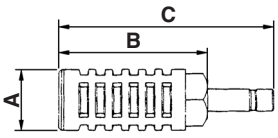

Series	Model	Effective area	A	B	C
For SY3000 (ø8)	AN203-KM8	14 mm²	ø16	26	51
For SY5000 (ø10)	AN200-KM10	26 mm²	ø22	53.8	80.8
	AN300-KM10	30 mm²	ø25	70	97

▪Plug

These are inserted in unused cylinder ports and SUP, EXH ports. Purchasing order is available in units of 10 pieces.

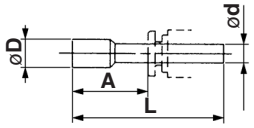

Dimensions

Applicable fittings size ød	Model	A	L	D
4	**KQ2P-04**	16	32	6
6	**KQ2P-06**	18	35	8
8	**KQ2P-08**	20.5	39	10
10	**KQ2P-10**	22	43	12
1/8"	**KQ2P-01**	16	31.5	5
5/32"	**KQ2P-03**	16	32	6
1/4"	**KQ2P-07**	18	35	8.5
5/16"	**KQ2P-09**	20.5	39	10

Manifold Option

▪ How to Order Interface Regulator (SY3000, 5000 only)

Series SY3000

ARBY3000 — 05 — P — 2

Regulating port

P	P port
A1	A port (P controlled type, A port regulation)
B1	B port (P controlled type, B port regulation)

Pressure gauge connection port

05	Pressure gauge (G15-10-01) [for odd number station]
06	Pressure gauge (G15-10-01) [for even number station]
M1	Plug (M-5P)

∗ In the case of mounting an ARBY3000 with a pressure gauge onto a manifold, use caution that the part numbers are different between the odd no. stations and the even no. stations to avoid gauges interfering with each others.

Series SY5000

ARBY5000 — 00 — P — 2

Regulating port

P	P port
A1	A port (P controlled type, A port regulation)
B1	B port (P controlled type, B port regulation)

Pressure gauge connection port

00	Pressure gauge (G15-10-01)
M1	Plug (M-5P)

ARBY3000-05-□-2
(For mounting odd number stations)

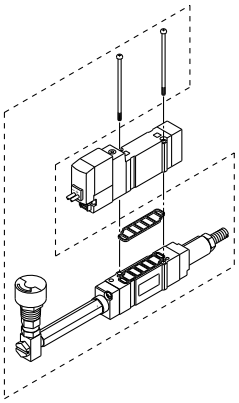

ARBY3000-06-□-2
(For mounting even number stations)

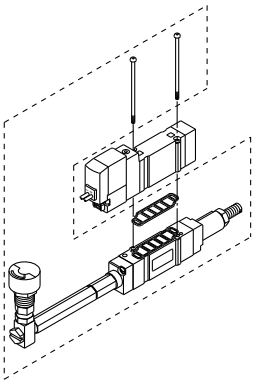

ARBY3000-M1-□-2

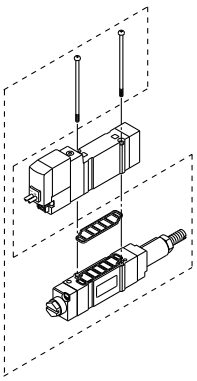

ARBY5000-00-□-2

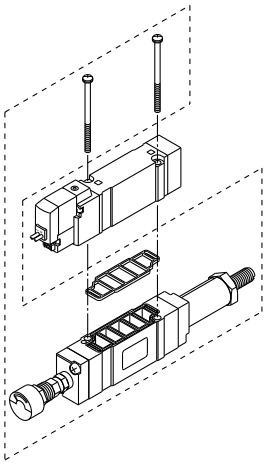

ARBY5000-M1-□-2

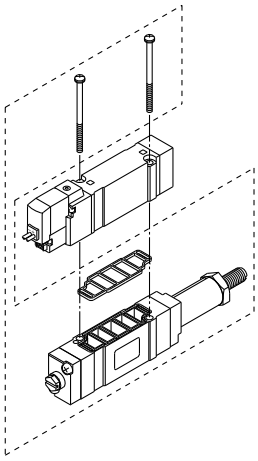

Accessory

Series	Round head combination screw	Gasket
ARBY3000	SY3000-23-10 (M2 x 36)	SX3000-57-4
ARBY5000	M3 x 48.5, Matt nickel plated	SX5000-57-6

⚠ Caution

Mounting screw tightening torques

M2: 0.17 N·m
M3: 0.8 N·m

Dimensions: Series SY3000

SS5Y3-45-[Stations] D-C4, N3 / C6, N7 -Q

(Station n) (Station 1)

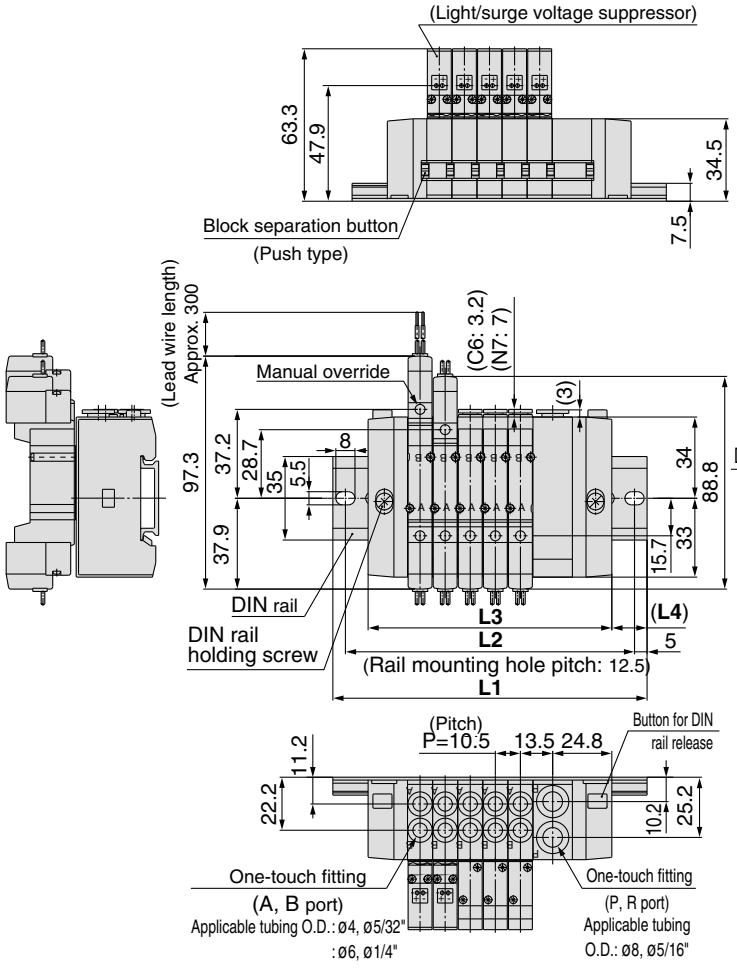

SS5Y3-45-[Stations] U-C4, N3 / C6, N7 -Q

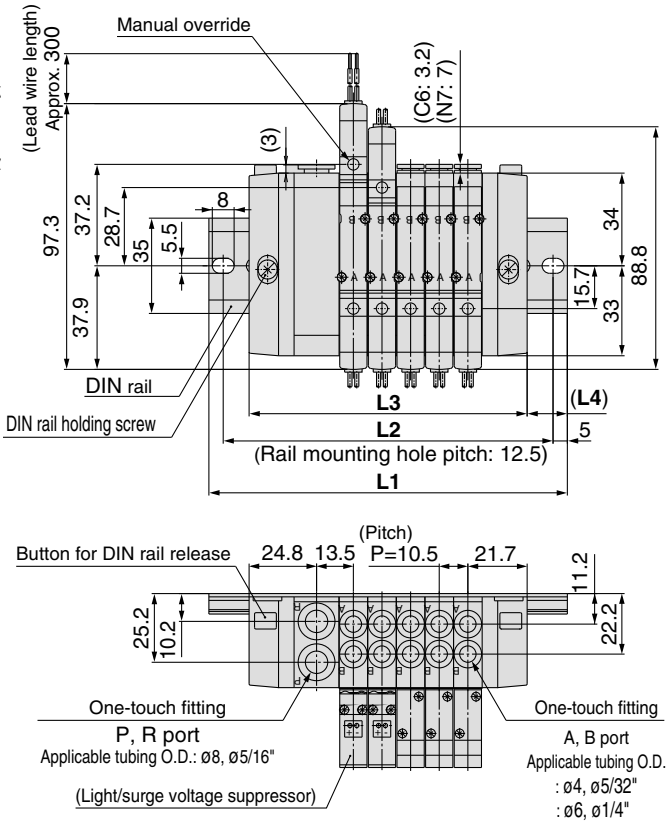

Stations n	2 stations	3	4	5	6	7	8	9	10 stations
L1	98	110.5	123	135.5	148	148	160.5	173	185.5
L2	87.5	100	112.5	125	137.5	137.5	150	162.5	175
L3	70.5	81	91.5	102	112.5	123	133.5	144	154.5
L4	13.5	14.5	15.5	16.5	17.5	12.5	13.5	14.5	15.5

With interface regulator (with gauge)

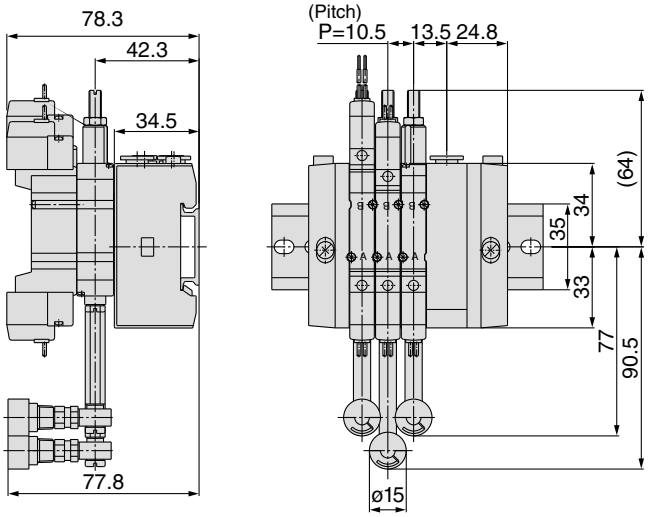

Dimensions: Series SY3000

SS5Y3-45-[Stations]B-$^{C4, N3}_{C6, N7}$-Q

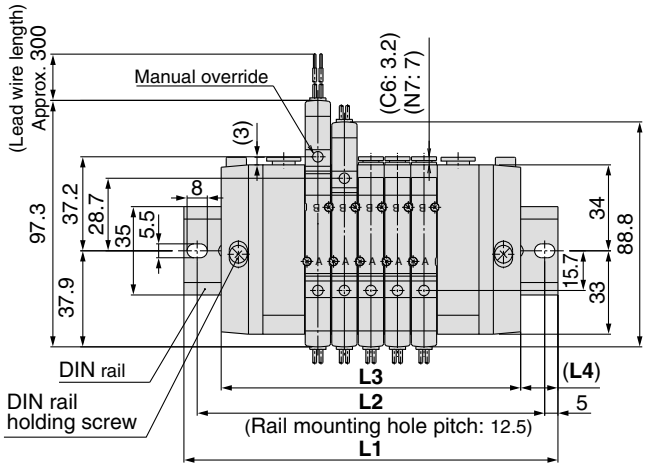

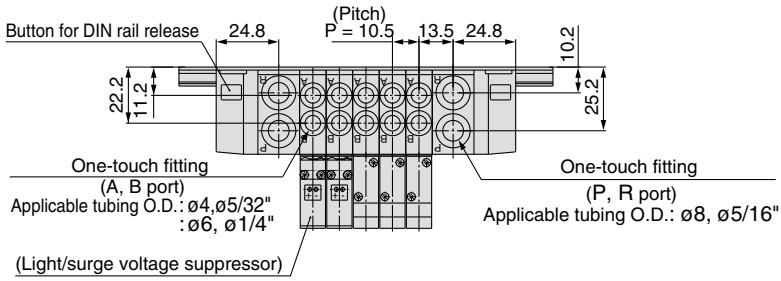

Stations n	2 stations	3	4	5	6	7	8	9	10 stations
L1	110.5	123	135.5	148	160.5	173	185.5	185.5	198
L2	100	112.5	125	137.5	150	162.5	175	175	187.5
L3	87	97.5	108	118.5	129	139.5	150	160.5	171
L4	11.5	12.5	13.5	14.5	15.5	16.5	17.5	12.5	13.5

Stations n	11 stations	12	13	14	15	16	17	18	19	20 stations
L1	210.5	223	235.5	248	248	260.5	273	285.5	298	310.5
L2	200	212.5	225	237.5	237.5	250	262.5	275	287.5	300
L3	181.5	192	202.5	213	223.5	234	244.5	255	265.5	276
L4	14.5	15.5	16.5	17.5	12	13	14	15	16	17

L plug connector

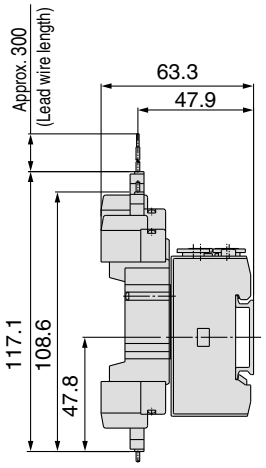

M plug connector

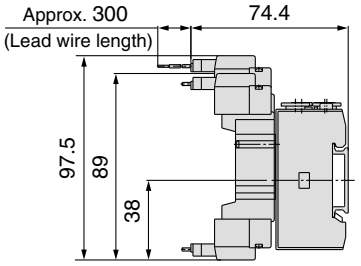

M8 connector (WO)

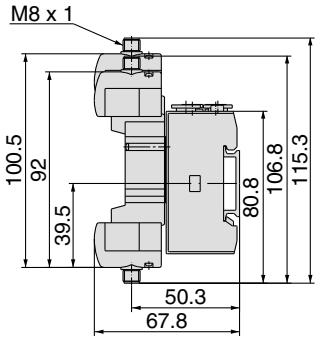

Note) Refer to back page 12 for dimensions of connector types.

Dimensions: Series SY5000

SS5Y5-45-[Stations] D-[C4, N3 / C6, N7 / C8, N9]-Q

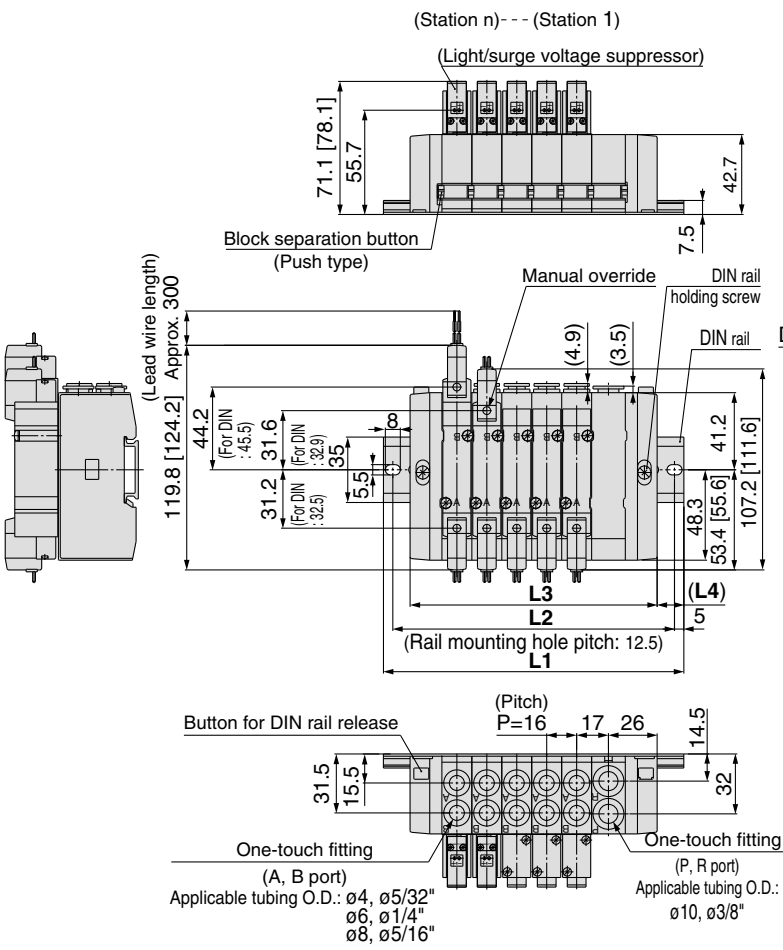

SS5Y5-45-[Stations] U-[C4, N3 / C6, N7 / C8, N9]-Q

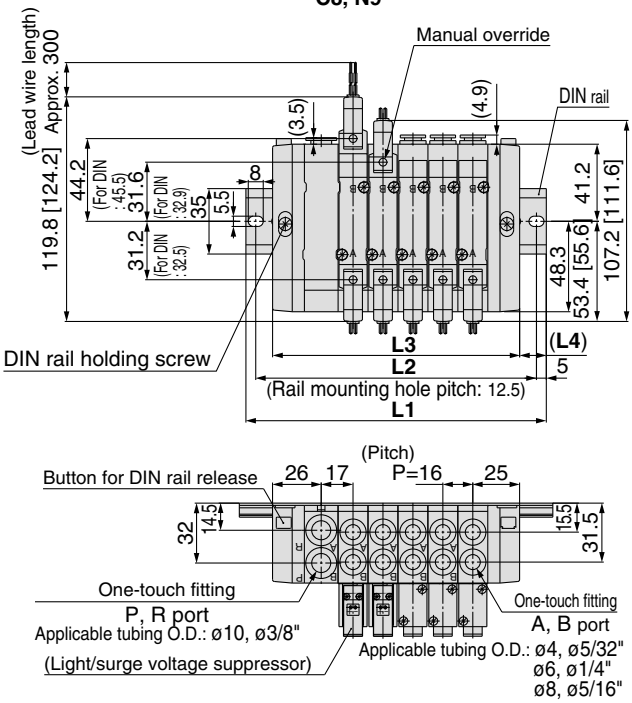

Stations n	2 stations	3	4	5	6	7	8	9	10 stations
L1	110.5	135.5	148	160.5	173	198	210.5	223	235.5
L2	100	125	137.5	150	162.5	187.5	200	212.5	225
L3	84	100	116	132	148	164	180	196	212
L4	13	17.5	16	14	12.5	17	15	13.5	11.5

With interface regulator (with gauge)

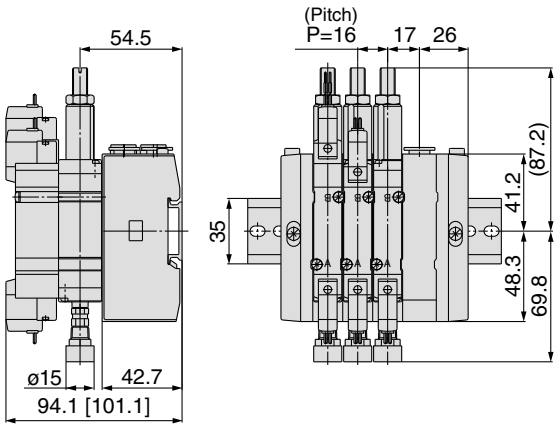

Dimensions: Series SY5000

SS5Y3-45- Stations B- C4, N3 / C6, N7 / C8, N9 -Q

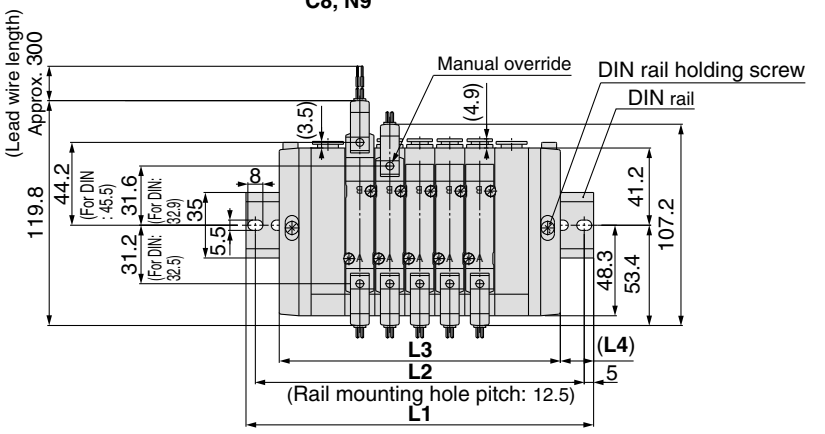

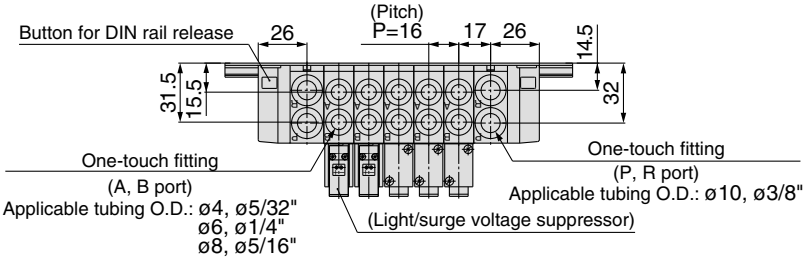

Stations n	2 stations	3	4	5	6	7	8	9	10 stations
L1	135.5	148	160.5	185.5	198	210.5	223	248	260.5
L2	125	137.5	150	175	187.5	200	212.5	237.5	250
L3	102	118	134	150	166	182	198	214	230
L4	16.5	15	13	17.5	16	14	12.5	17	15

Stations n	11 stations	12	13	14	15	16	17	18	19	20 stations
L1	273	285.5	310.5	323	335.5	360.5	373	385.5	398	423
L2	262.5	275	300	312.5	325	350	362.5	375	387.5	412.5
L3	246	262	278	294	310	326	342	358	374	390
L4	13.5	11.5	16	14.5	12.5	17	15.5	13.5	12	16.5

L plug connector

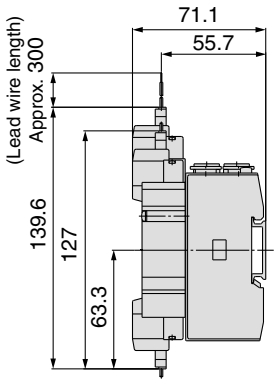

M plug connector

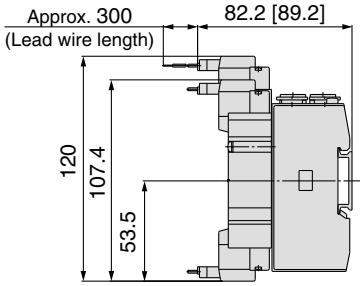

M8 connector (WO)

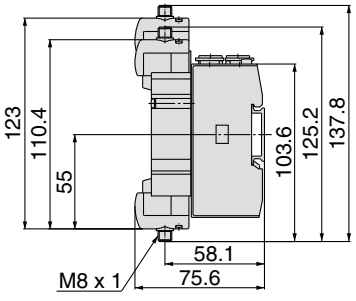

Note) Refer to back page 12 for dimensions of connector types.

DIN terminal (D)

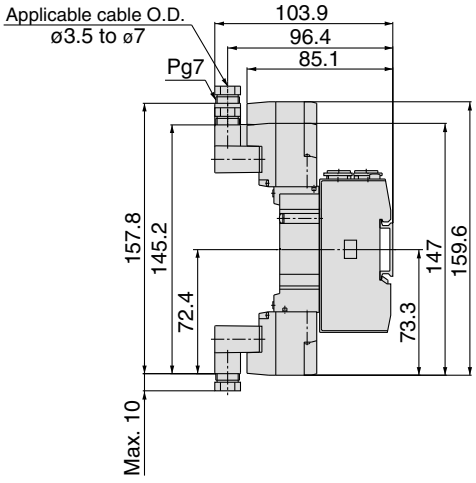

DIN Rail Manifold Exploded View

Type 45

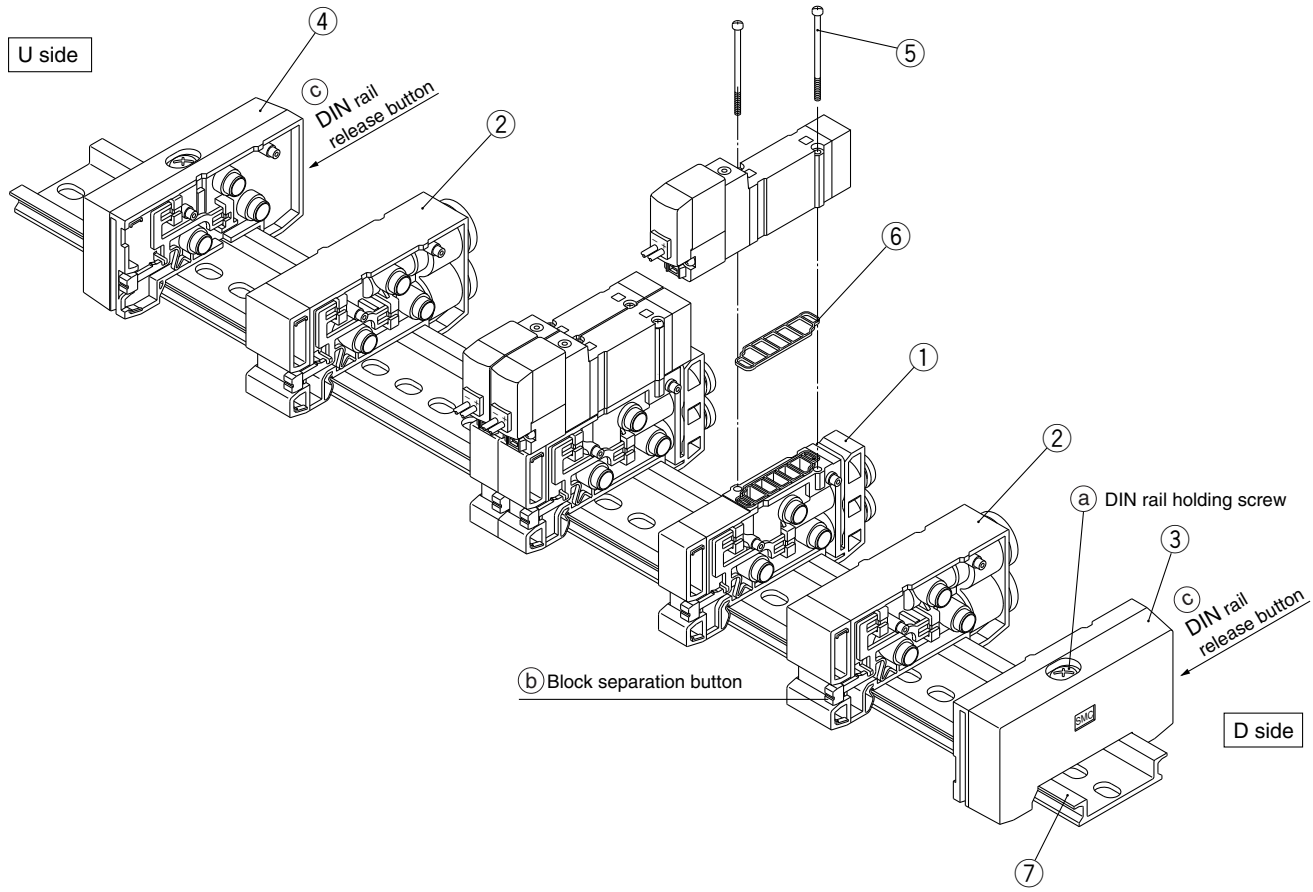

Replacement Parts

No.	Description	No.		Note
		SY3000	**SY5000**	
1	Manifold block assembly	SX3000-50-1A-□□-Q	SX5000-50-1A-□□-Q	□□: SY3000 (Metric size) C4: With one-touch fitting for ø4 (Inch size) N3: With one-touch fitting for ø5/32" C6: With one-touch fitting for ø6 N7: With one-touch fitting for ø1/4" SY5000 (Metric size) C4: With one-touch fitting for ø4 (Inch size) N3: With one-touch fitting for ø5/32" C6: With one-touch fitting for ø6 N7: With one-touch fitting for ø1/4" C8: With one-touch fitting for ø8 N9: With one-touch fitting for ø5/16" (Gasket 6 is supplied as an accessory.)
2	SUP/EXH block assembly	(Metric size) SX3000-51-1A (Inch size) SX3000-51-15A	(Metric size) SX5000-51-1A (Inch size) SX5000-51-15A	P, R port SY3000 (Metric size) With one-touch fitting for ø8 (Inch size) With one-touch fitting for ø5/16" P, R port SY5000 (Metric size) With one-touch fitting for ø10 (Inch size) With one-touch fitting for ø3/8"
3	End block assembly R	SX3000-52-1A-Q	SX5000-52-1A-Q	For D side
4	End block assembly R	SX3000-53-1A-Q	SX5000-53-1A-Q	For U side
5	Round head combination screw	SY3000-23-4	M3 x 26 (Matt nickel plated)	
6	Gasket	SX3000-57-4	SX5000-57-6	
7	DIN rail	VZ1000-11-1-□		Refer to page 118.

DIN Rail Manifold Exploded View

How to Increase Manifold Bases Station expansion is possible at any position.

1. Loosen DIN rail holding screw ⓐ fixing the manifold base until it begins to turn idly. (While pressing DIN rail releasing buttons ⓒ, at two locations, separate the manifold base from the DIN rail.)
2. Press manifold block assembly dividing button ⓑ, that are at the location where manifold bases are to be added, until button ⓑ locks, and then separate the block assemblies.
3. Mount additional manifold block assembly on the DIN rail as shown in the figure 1.
4. Press the block assemblies until a click sound is produced, and tighten the DIN rail holding screw ⓐ to fix them to the DIN rail.
   ⚠**Caution** (Tightening torque: 1.4 N·m)
   (While lightly holding the blocks after fixing an end block on one side, tighten the other end block for for better sealing.)

⚠Caution

Note 1) When there are 10 or fewer manifold block assemblies, and more are added to make a total of 11 or more, a supply/exhaust block assembly must also be added.

Note 2) When disassembly and assembly are performed, air leakage may result if connections between blocks and tightening of the end block's holding screw, is inadequate. Before supplying air, confirm that there are no gaps, etc. between blocks, and that manifold blocks are securely fastened to the DIN rail. Then supply air and confirm that there is no air leakage before operating.

Fig. (1) Block mounting procedure

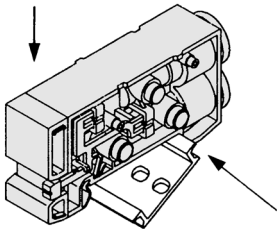

Hook the DIN rail here and press down in the direction of the arrow until a click sound is heard.

How to Change Fitting Assembly

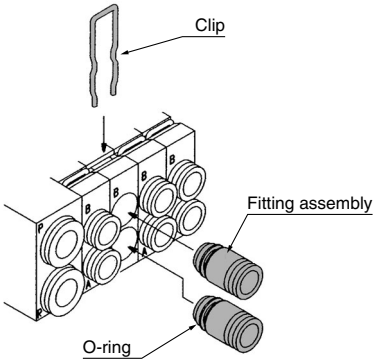

Type 45 manifold permits change in the A and B port sizes by changing the manifold block fitting assembly.
After removing the valve, remove the clip with a screwdriver, etc. For mounting a new fitting assembly, insert it and then insert a clip until it will not come out of the manifold block.

Fitting Assembly Part No.

Metric size

SY3000	One-touch fitting for ø4	VVQ1000-50A-C4
	One-touch fitting for ø6	VVQ1000-50A-C6
SY5000	One-touch fitting for ø4	VVQ1000-51A-C4
	One-touch fitting for ø6	VVQ1000-51A-C6
	One-touch fitting for ø8	VVQ1000-51A-C8

Inch size

SY3000	One-touch fitting for ø5/32"	VVQ1000-50A-N3
	One-touch fitting for ø1/4"	VVQ1000-50A-N7
SY5000	One-touch fitting for ø5/32"	VVQ1000-51A-N3
	One-touch fitting for ø1/4"	VVQ1000-51A-N7
	One-touch fitting for ø5/16"	VVQ1000-51A-N9

Note 1) P and R ports cannot be changed.
Note 2) Use caution that O-rings must be free from scratches and dust. Otherwise, air leakage may result.

Type 45-A/NA

5 Port Solenoid Valve
Series SY3000/5000
Base Mounted
Stacking Type/DIN Rail Mounted
Connector Box

How to Order Manifold

SS5Y 3 – 45 – A U 05 D C6 – [ ] -Q

Series

3	SY3000
5	SY5000

Specifications

Symbol	Specifications
A	With connector box (+COM spec.)
NA	With connector box (–COM spec.)

The style of attached lead wire assembly is different.

Connector box mounting position

Symbol	Mounting position
U	U side
D	D side

Valve stations

Symbol	Stations	Note
02	2 stations	Applicable up to 16 solenoid valves.
⋮	⋮	
16	16 stations	

SUP/EXH block assembly mounting position

Symbol	Mounting position	Applicable stations
U	U side	2 to 10 stations
D	D side	
B	Both sides	2 to 16 stations
M*	Special specifications	

* For special specifications, indicate separately by the manifold specification sheet.

A/B port size

One-touch fitting (Metric size)

Symbol	Port size	Applicable series
C4	One-touch fitting for ø4	SY3000
C6	One-touch fitting for ø6	
M	Mixed	
C4	One-touch fitting for ø4	SY5000
C6	One-touch fitting for ø6	
C8	One-touch fitting for ø8	
M	Mixed	

One-touch fitting (Inch size)

Symbol	Port size	Applicable series
N3	One-touch fitting for ø5/32"	SY3000
N7	One-touch fitting for ø1/4"	
M	Mixed	
N3	One-touch fitting for ø5/32"	SY5000
N7	One-touch fitting for ø1/4"	
N9	One-touch fitting for ø5/32"	
M	Mixed	

* In the case of mixed specifications, indicate separately on the manifold specification sheet.

Option

When a longer DIN rail is desired than the specified stations, specify the station number to be required. (Max. 20 stations)

For external pilot specifications and built-in silencer, refer to page 205.

How to Order Valve Manifold Assembly (Example)

Example (SY3000, +COM, U side)

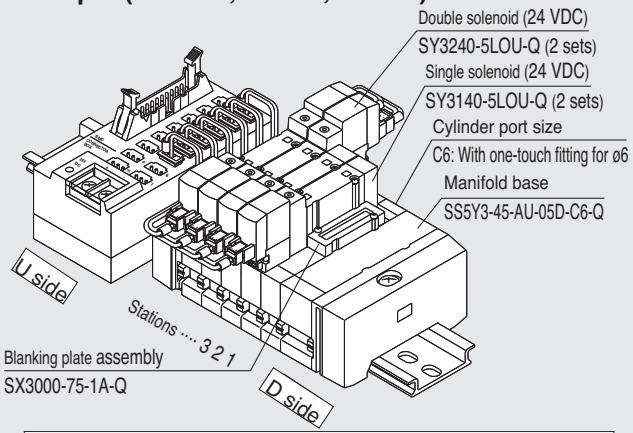

SS5Y3-45-AU-05D-C6-Q	**1 set (Type 45, 5 station manifold base part no.)**
***SX3000-75-1A-Q**	**1 set (Blanking plate assembly part no)**
***SY3140-5LOU-Q**	**2 sets (Single solenoid part no.)**
***SY3240-5LOU-Q**	**2 sets (Double solenoid part no.)**

* The asterisk denotes the symbol for assembly. Prefix it to the part nos. of the solenoid valve, etc.

The valve arrangement is numbered as the 1st. station from D side regardless of the mounting position of connector box. In ordering, specify the part nos. in the order from the 1st. station on D side. Besides, when the arrangement will be complicated, fill out the manifold specification sheet to instruct us.

SS5Y$^{3}_{5}$-45-A$^{U}_{D}$-[ ]□-C□ is assembled with solenoid valve and lead wire assembly when shipping. When ordering manifold only (without valves/wires/options), refer to how to order on page 115 and list the connector box (VZ3000-106-1A) and the rail stopper (TXE1-SMC) below the manifold to allow for the connector box mounting at U side. (Be sure to order DIN rail 3 station longer than number of the manifold stations.) In this case, please note that dimensions, L1 and L2 on pages 131 and 132 may vary slightly.) For other components, refer to page 133.

How to Order Valve

SY 5 2 40 – 5 LOU [ ] [ ] -Q

Series

3	SY3000
5	SY5000

Type of actuation

1	2 position single
2	2 position double
3	3 position closed center
4	3 position exhaust center
5	3 position pressure center

Rated voltage

5	24 VDC

Manual override

-	Non-locking push type
D	Push-turn locking slotted type
E	Push-turn locking lever type

Made to Order

—	—
X90	Main valve fluororubber

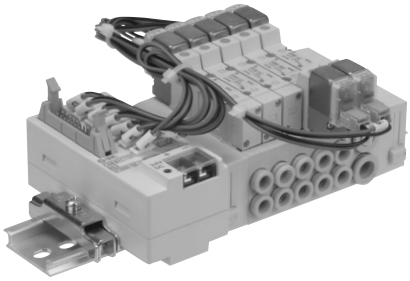

Manifold Specifications

Model		SS5Y3-45-A/NA	SS5Y5-45-A/NA
Applicable valve		SY3□40	SY5□40
Manifold type		Stacking type/DIN rail mounted	
P (SUP)/R (EXH)		Common SUP, Common EXH	
Valve stations		2 to 16 stations Note 1, 2)	
A, B port Porting specifications	Location	Base	
	Direction	Side	
Port size	P, R port	C8 (One-touch fitting for ø8)	C10 (One-touch fitting for ø10)
	A, B port	C4 (One-touch fitting for ø4) C6 (One-touch fitting for ø6)	C4 (One-touch fitting for ø4) C6 (One-touch fitting for ø6) C8 (One-touch fitting for ø8)
Manifold base weight W (g) n: Stations		2 to 10 stations: W = 26n + 207 11 to 20 stations: W = 26n + 229	2 to 10 stations: W = 52n + 245 11 to 16 stations: W = 52n + 279
Applicable flat ribbon cable connector		Flat ribbon cable connector Socket: 20 pins MIL type with strain relief conforming to MIL-C-83503	
Wiring specifications		+COM specifications (Type 45-A), –COM specifications (Type 45-NA)	

Note 1) For more than 11 stations, supply pressure to P port on both sides and exhaust from R port on both sides.
Note 2) There is a limit depending on the number of solenoids. Refer to "How to Order".

Flow Characteristics

Model	Port size		Flow characteristics							
	1, 5, 3 (P, EA, EB)	4, 2 (A, B)	1 → 4/2 (P → A/B)				4/2 → 5/3 (A/B → EA/EB)			
			C (dm³/(s·bar))	b	Cv	Q[ℓ/min(ANR)]*	C (dm³/(s·bar))	b	Cv	Q[ℓ/min(ANR)]*
SS5Y3-45-□	C8	C6	0.88	0.21	0.22	212	0 .95	0.18	0.22	225
SS5Y5-45-□	C10	C8	2.2	0.24	0.53	539	2.5	0.18	0.58	592

Note) The value is for manifold base with 5 stations and individually operated 2 position type.
* These values have been calculated according to ISO6358 and represent the flow rate measured in standard conditions at an upstream pressure of 0.6 MPa (relative pressure) and a differential pressure of 0.1MPa.

Manifold Wiring Diagram (Circuit diagram for the reference layout)

+COM electric circuit diagram

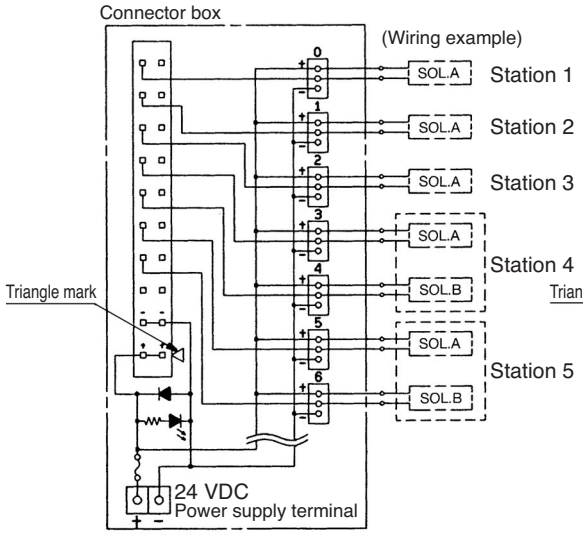

–COM electric circuit diagram

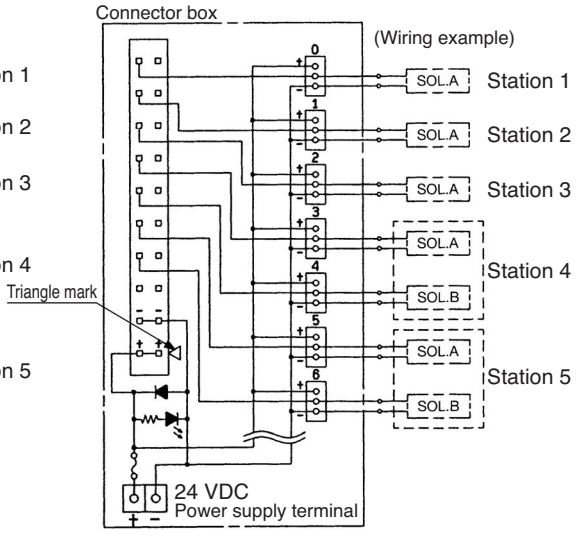

- Connector box for +COM allows transmission until G71-OD16, manufactured by OMRON Corp., to be connected directly for serial transmission.
- When an external power source must be supplied to the manifold, correct polarity must be observed, otherwise damage to PLC is possible.
- The wiring of solenoid valves, corresponds with the labeled connector box 0 to 15 from D side.
- If valves other than non-polar type are used, this may cause malfunction.

Reference layout

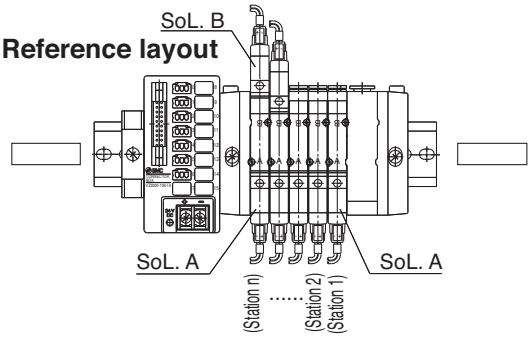

Manifold Option

▪ Individual SUP spacer assembly

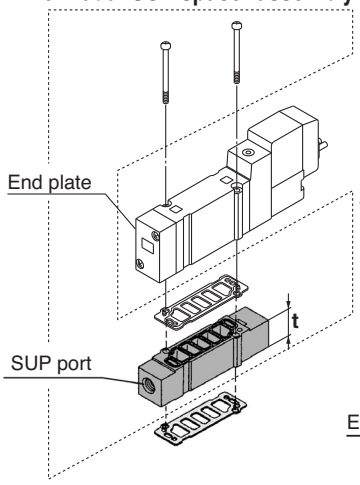

Series	Assembly part no.	Port size	t
SY3000	SY3000-38-2A-Q	M5	11
SY5000	SY5000-38-16∗A-Q	1/8	15

Note) The SUP port may be either on the lead wire side or on the end plate side. However, as the CE-compliant products (-Q) must be mounted in the specified direction, the port directions cannot be changed. (An assembly is shipped under the condition shown in the figure.)

▪ Individual EXH spacer assembly

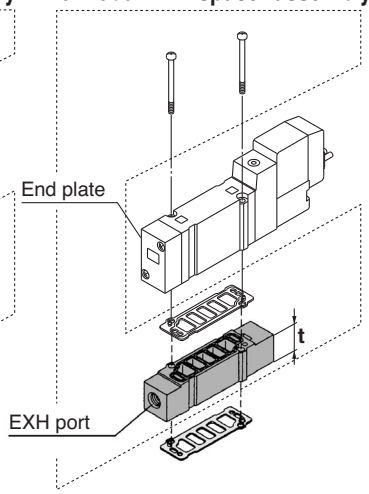

Series	Assembly part no.	Port size	t
SY3000	SY3000-39-2A-Q	M5	11
SY5000	SY5000-39-16∗A-Q	1/8	15

Note) The EXH port may be either on the lead wire side or on the end plate side. However, as the CE-compliant products (-Q) must be mounted in the specified direction, the port directions cannot be changed. (An assembly is shipped under the condition shown in the figure.)

▪ Cable assembly

AXT100-FC20- 1 2 3

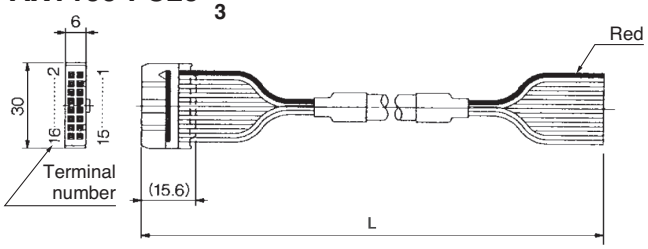

Connector Assembly for Flat Ribbon Cables

Cable length (**L**)	Assembly part no.	Note
1.5 m	AXT100-FC20-1	Cable 20 core x 28 AWG
3 m	AXT100-FC20-2	
5 m	AXT100-FC20-3	

∗ For other commercial connectors, use a 20 pins with strain relief conforming to MIL-C-83503.
∗ Cannot be used for movable wiring
∗ Lengths other than the above are also available. Please contact SMC for details.

Connector Manufacturers' Example

- 3M Japan Limited
- Fujitsu Limited
- Japan Aviation Electronics Industry, Limited
- J.S.T. Mfg. Co., Ltd.
- Oki Electric Cable Co., Ltd.

▪ SUP blocking disk

By installing a SUP blocking disk in the pressure supply passage of a manifold valve, it is possible to supply two or more different high and low pressures to one manifold.



Series	Part no.
SY3000	SX3000-77-1A
SY5000	SX5000-77-1A

▪ EXH blocking disk

By installing an EXH blocking disk in the exhaust passage of a manifold valve, it is possible to divide the valve's exhaust so that it does not affect another valve. (Two blocking disks are needed to divide both exhausts.)



Series	Part no.
SY3000	SX3000-77-1A
SY5000	SX5000-77-1A

▪ Label for block disk

The labels shown below are used on manifold stations containing SUP/EXH blocking disk(s) to show their location. (3 pcs. each)

VZ3000-123-1A

Label for SUP block disk | Label for EXH block disk | Label for SUP/EXH block disk

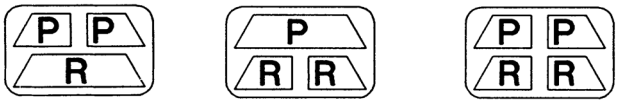

Note) When a block disk is concurrently ordered by specifying on the manifold specification sheet, etc., a label will be stuck on the position where block disk is mounted.

▪ Silencer with One-touch fitting

The silencer plugs directly into the One-touch fittings of the manifold.

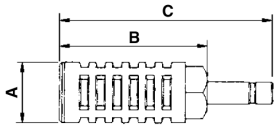

Series	Model	Effective area	A	B	C
For SY3000 (ø8)	AN203-KM8	14 mm²	ø16	26	51
For SY5000 (ø10)	AN200-KM10	26 mm²	ø22	53.8	80.8
	AN300-KM10	30 mm²	ø25	70	97

▪ Plug

These are inserted in unused cylinder ports and SUP, EXH ports. Purchasing order is available in units of 10 pieces.

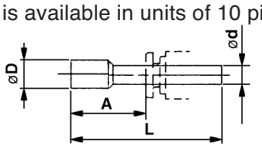

Dimensions

Applicable fittings size ø**d**	Model	A	L	D
4	**KQ2P-04**	16	32	6
6	**KQ2P-06**	18	35	8
8	**KQ2P-08**	20.5	39	10
10	**KQ2P-10**	22	43	12
1/8"	**KQ2P-01**	16	31.5	5
5/32"	**KQ2P-03**	16	32	6
1/4"	**KQ2P-07**	18	35	8.5
5/16"	**KQ2P-09**	20.5	39	10

⚠ Warning

When mounting a valve or spacer on the manifold base or sub-plate, etc., those mounting directions are determined. If mounted in the wrong direction, the equipment to be connected may cause malfunction. Refer to external dimensions, and then mount it.

Manifold Option

▪ How to Order Interface regulator (SY3000, 5000 only)

Series SY3000

ARBY3000 — 05 — P — 2

Regulating port

P	P port
A1	A port (P controlled type, A port regulation)
B1	B port (P controlled type, B port regulation)

Pressure gauge connection port

05	Pressure gauge (G15-10-01) [for odd number station]
06	Pressure gauge (G15-10-01) [for even number station]
M1	Plug (M-5P)

∗ In the case of mounting an ARBY3000 with a pressure gauge onto a manifold, use caution that the part numbers are different between the odd no. stations and the even no. stations to avoid the gauges from interfering with each other.

Series SY5000

ARBY5000 — 00 — P — 2

Regulating port

P	P port
A1	A port (P controlled type, A port regulation)
B1	B port (P controlled type, B port regulation)

Pressure gauge connection port

00	Pressure gauge (G15-10-01)
M1	Plug (M-5P)

ARBY3000-05-□-2
(For odd number stations)

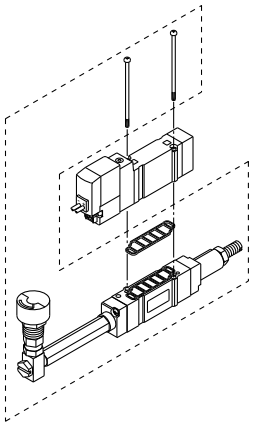

ARBY3000-06-□-2
(For even number stations)

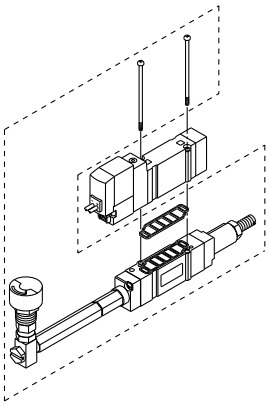

ARBY3000-M1-□-2

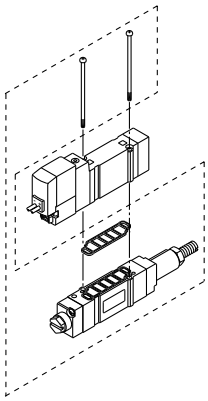

ARBY5000-00-□-2

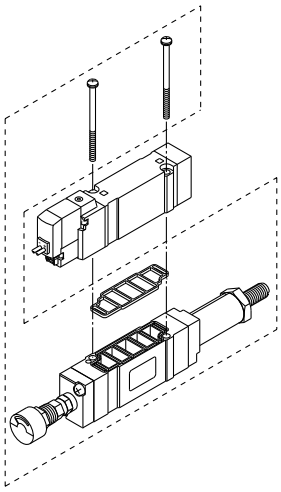

ARBY5000-M1-□-2

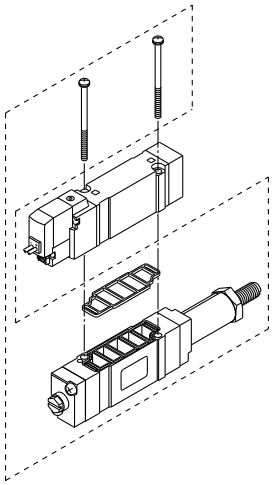

Accessory

Series	Round head combination screw	Gasket
ARBY3000	SY3000-23-10 (M2 x 36)	SX3000-57-4
ARBY5000	M3 x 48.5, Matt nickel plated	SX5000-57-6

⚠ Caution

Mounting screw tightening torques

M2: 0.16 N·m
M3: 0.8 N·m

Dimensions: Series SY3000

SS5Y3-45-AU- Stations D- C4, N3 C6, N7 -Q

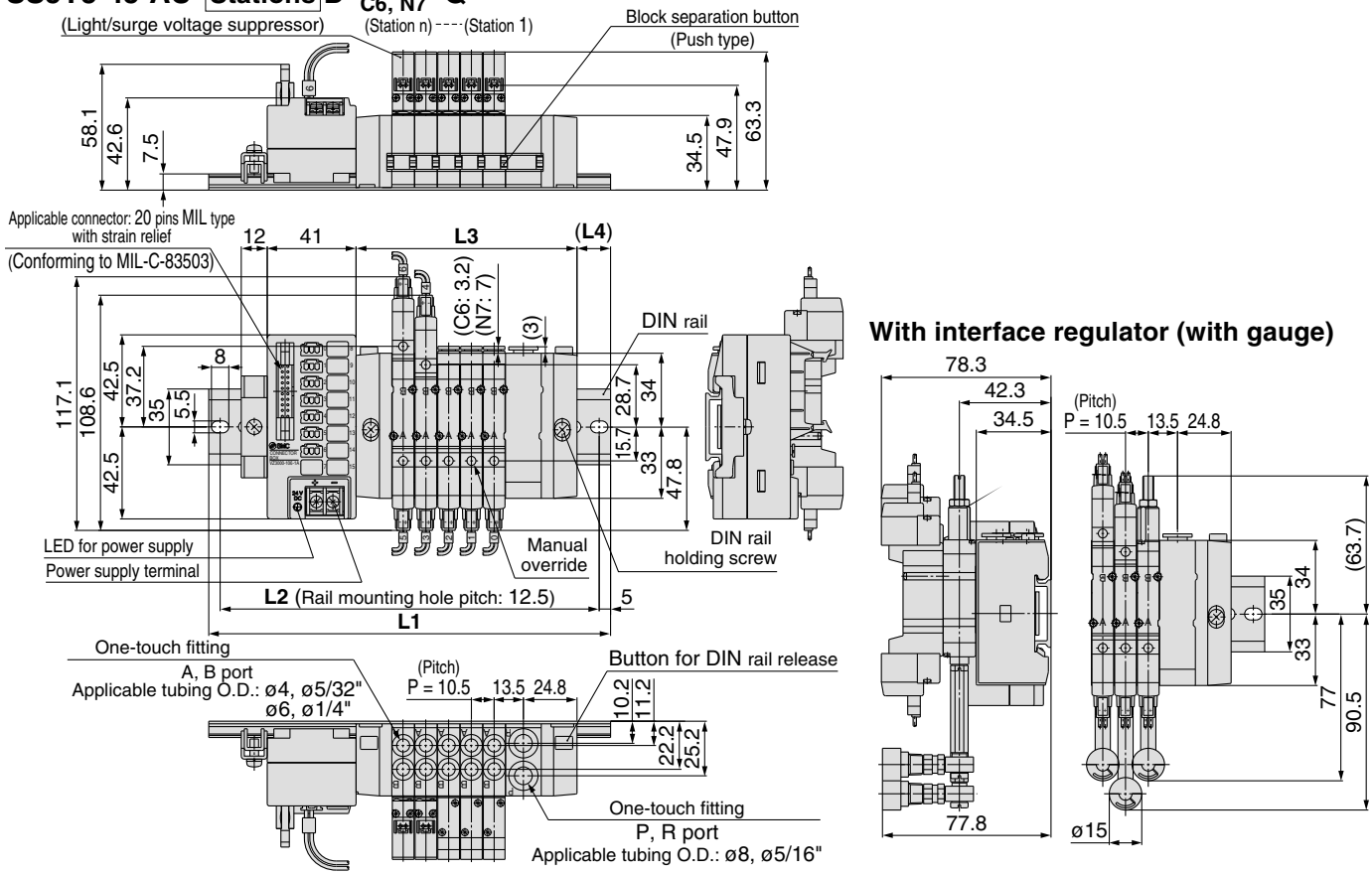

With interface regulator (with gauge)

SS5Y3-45-AD- Stations U- C4, N3 C6, N7 -Q

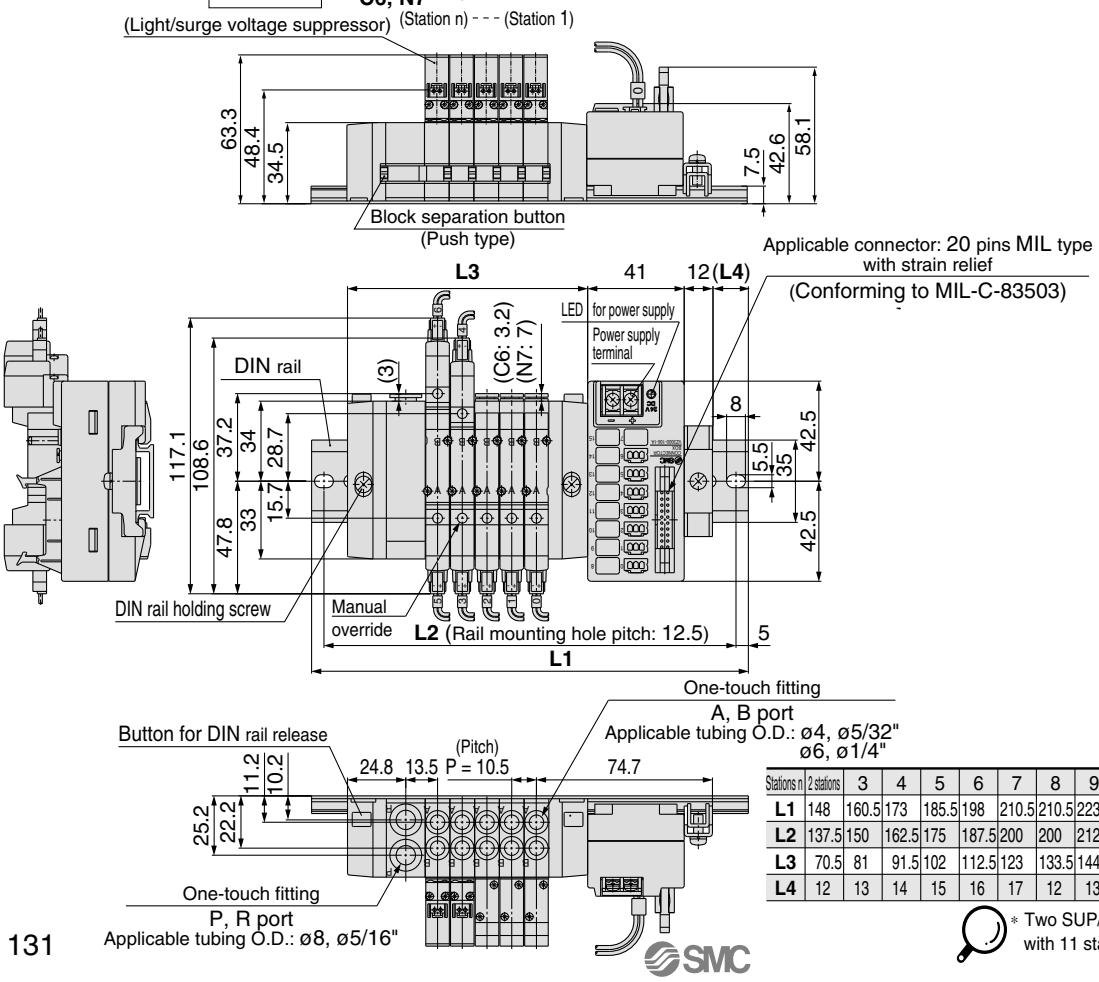

Stations n	2 stations	3	4	5	6	7	8	9	10	11	12	13	14	15	16 stations
L1	148	160.5	173	185.5	198	210.5	210.5	223	235.5	260.5	273	285.5	298	310.5	310.5
L2	137.5	150	162.5	175	187.5	200	200	212.5	225	250	262.5	275	287.5	300	300
L3	70.5	81	91.5	102	112.5	123	133.5	144	154.5	181.5	192	202.5	213	223.5	234
L4	12	13	14	15	16	17	12	13	14	13	14	15	16	17	11.5

* Two SUP/EXH blocks are provided for models with 11 stations or more.

SMC

Dimensions: Series SY5000

SS5Y5-45-AU-[Stations]D-C4, N3 C6, N7 C8, N9

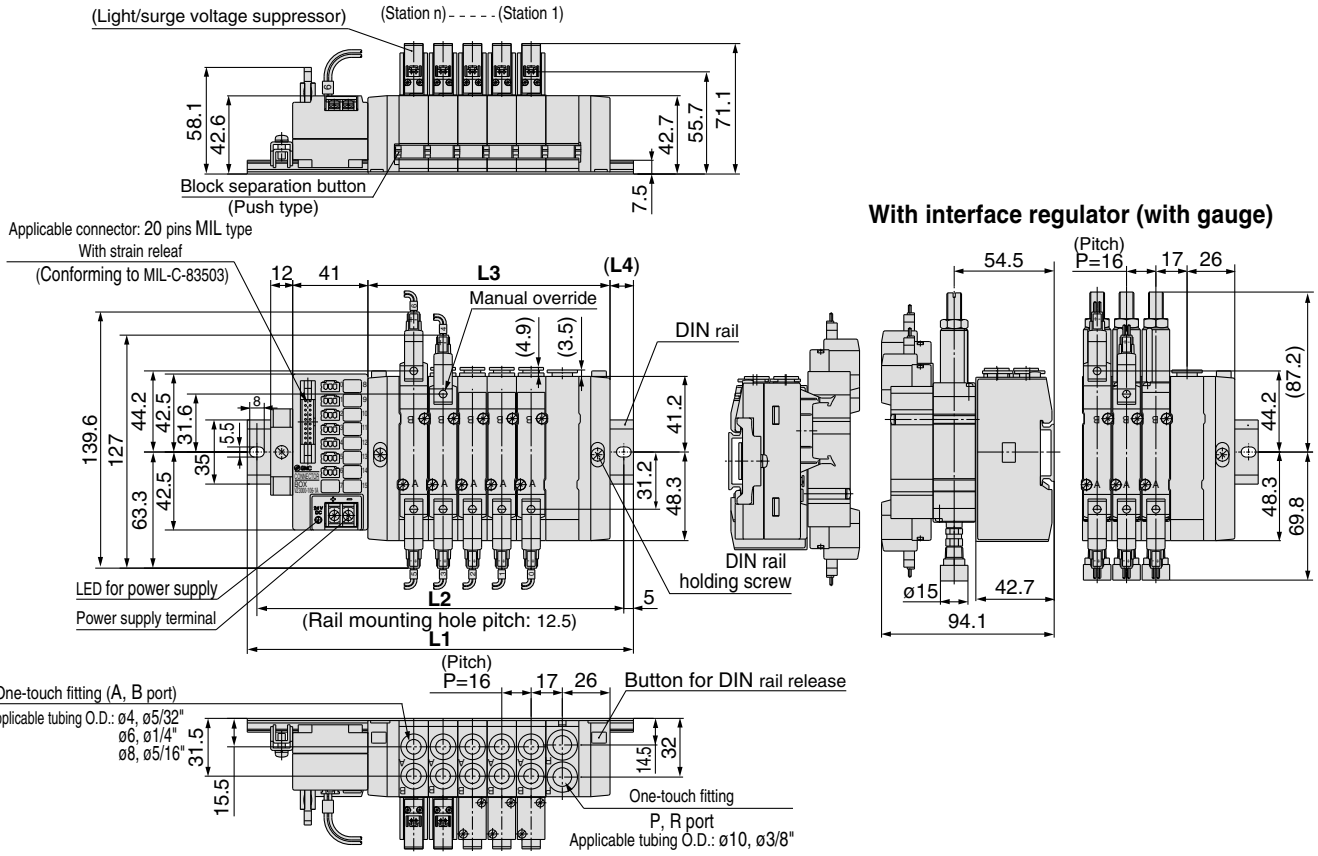

SS5Y5-45-AD-[Stations]U-C4, N3 C6, N7 C8, N9

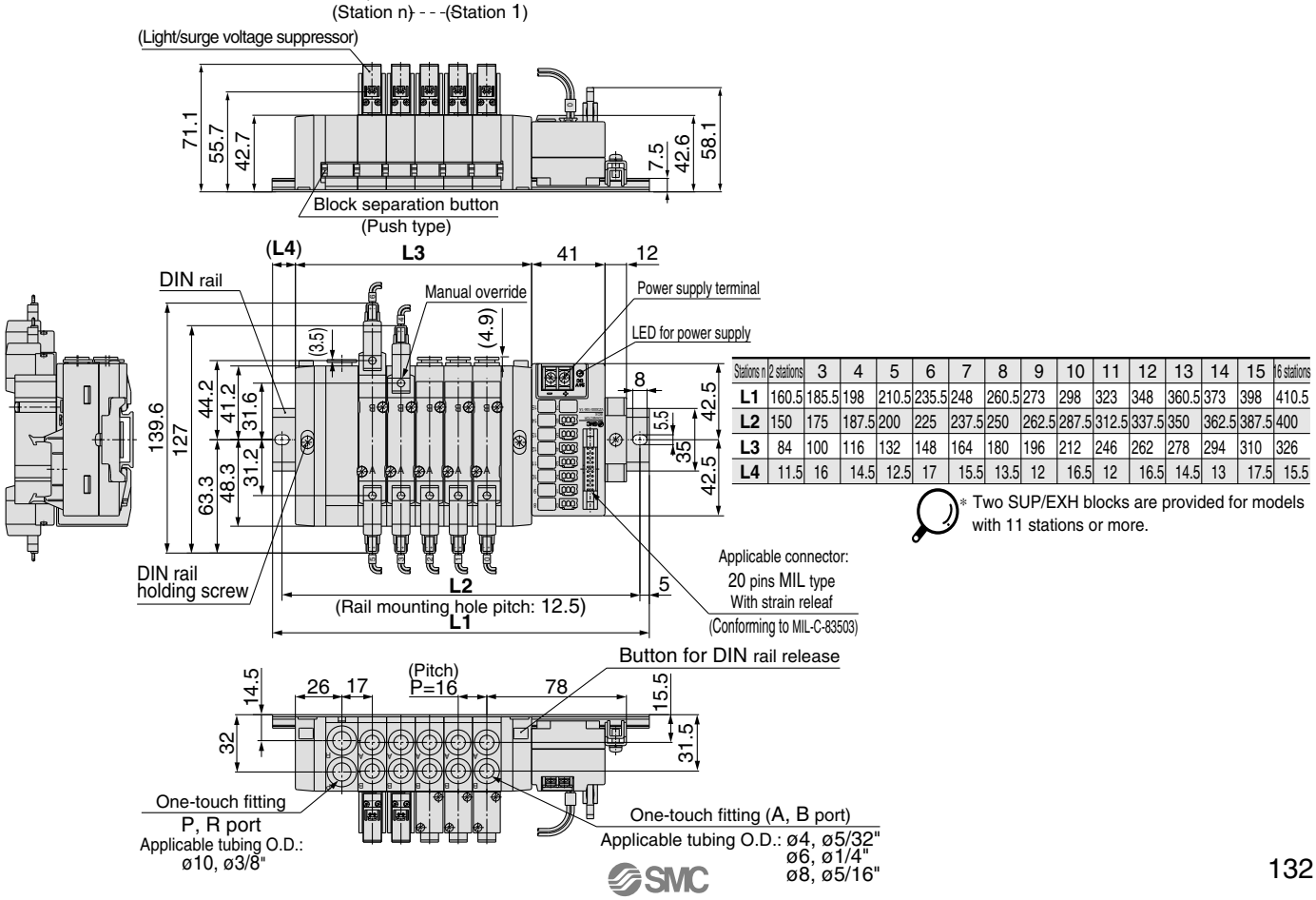

Stations n	2 stations	3	4	5	6	7	8	9	10	11	12	13	14	15	16 stations
L1	160.5	185.5	198	210.5	235.5	248	260.5	273	298	323	348	360.5	373	398	410.5
L2	150	175	187.5	200	225	237.5	250	262.5	287.5	312.5	337.5	350	362.5	387.5	400
L3	84	100	116	132	148	164	180	196	212	246	262	278	294	310	326
L4	11.5	16	14.5	12.5	17	15.5	13.5	12	16.5	12	16.5	14.5	13	17.5	15.5

* Two SUP/EXH blocks are provided for models with 11 stations or more.

DIN Rail Manifold Exploded View

Type 45-A/NA

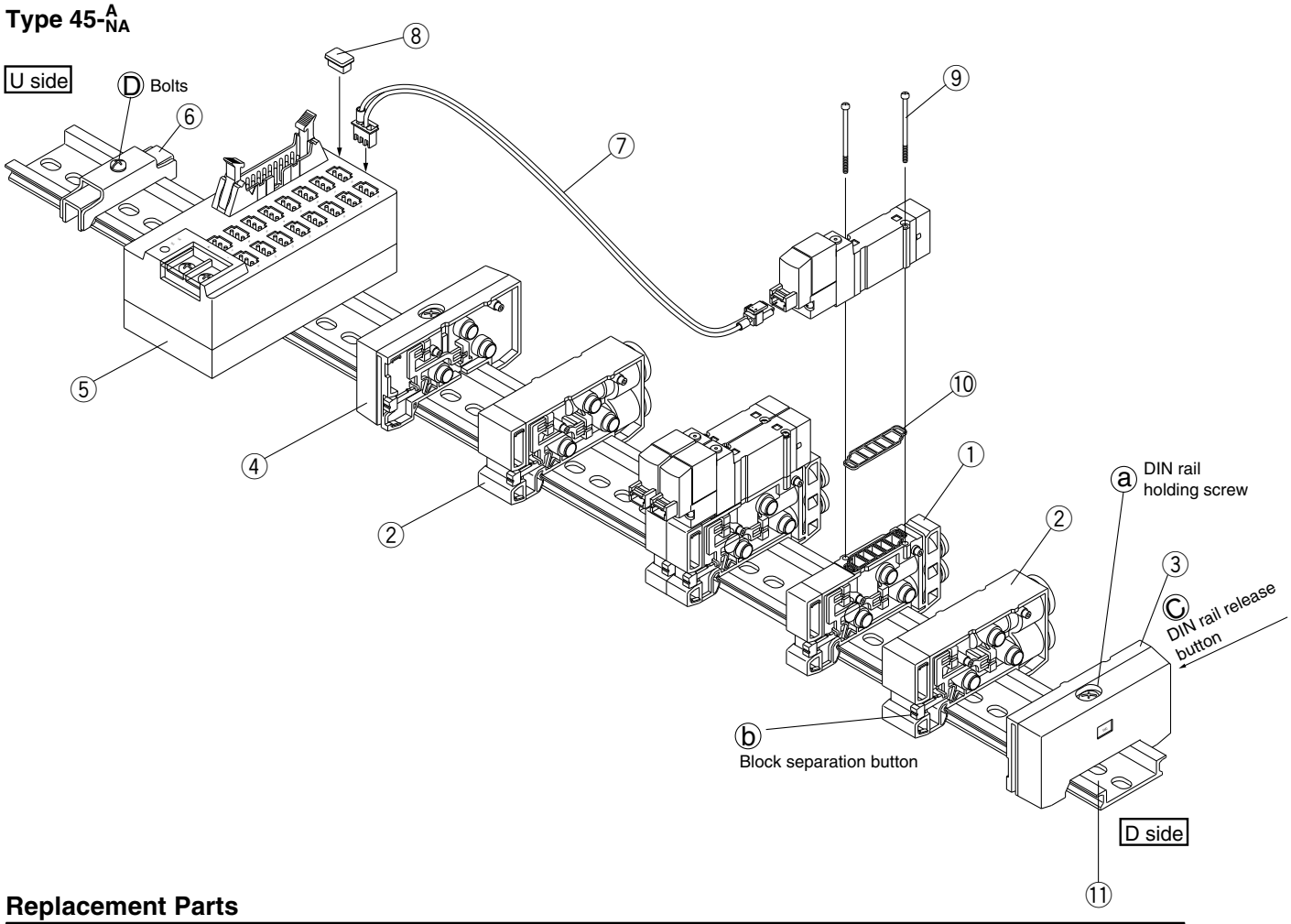

Replacement Parts

No.	Description	No.		Note
		SY3000	**SY5000**	
1	Manifold block assembly	SX3000-50-1A-□□-Q	SX5000-50-1A-□□-Q	•SY3000 (Metric size) (Inch size) C4: With one-touch fitting for ø4 N3: With one-touch fitting for ø5/32" C6: With one-touch fitting for ø6 N7: With one-touch fitting for ø1/4" For SY5000 (Metric size) (Inch size) C4: With one-touch fitting for ø4 N3: With one-touch fitting for ø5/32" C6: With one-touch fitting for ø6 N7: With one-touch fitting for ø1/4" C8: With one-touch fitting for ø8 N9: With one-touch fitting for ø5/16" (Gasket 10 is supplied as an accessory.)
2	SUP/EXH block assembly	(Metric size) SX3000-51-1A (Inch size) SX3000-51-15A	(Metric size) SX5000-51-1A (Inch size) SX5000-51-15A	P, R port SY3000 (Metric size) With one-touch fitting for ø8 (Inch size) With one-touch fitting for ø5/16" P, R port SY5000 (Metric size) With one-touch fitting for ø10 (Inch size) With one-touch fitting for ø3/8"
3	End block assembly R	SX3000-52-1A-Q	SX5000-52-1A-Q	For D side
4	End block assembly L	SX3000-53-1A-Q	SX5000-53-1A-Q	For U side
5	Connector box	VZ3000-106-1A		For 24 VDC only
6	Rail stopper	TXE1-SMC		Made by Kasuga Electric Works
7	Connecter assembly	SY3000-43-1A-□	SY3000-43-2A-□	+COM Type D, 2 to 8 stations Type U, 9 to 16 stations
		SY3000-43-2A-□	SY3000-43-3A-□	+COM Type D, 9 to 16 stations Type U, 2 to 8 stations
		SY3000-43-1NA-□	SY3000-43-2NA-□	–COM Type D, 2 to 8 stations Type U, 9 to 16 stations
		SY3000-43-2NA-□	SY3000-43-3NA-□	–COM Type D, 9 to 16 stations Type U, 2 to 8 stations
8	Dust cap	VZ3000-63-2		
9	Round head combination screw	SY3000-23-4	M3 x 26, Matt nickel plated	
10	Gasket	SX3000-57-4	SX5000-57-6	
11	DIN rail	VZ1000-11-1-□		Refer to page 118.

How to Increase Manifold Bases

Station expansion is possible at any position.

1. Loosen DIN rail holding screw ⓐ fixing the manifold base until it begins to turn idly. (While pressing DIN rail releasing buttons ⓒ, at two locations, separate the manifold base from the DIN rail.)
2. Press manifold block assembly dividing button ⓑ, that are at the location where manifold bases are to be added, until button ⓑ locks, and then separate the block assemblies.
3. Mount additional manifold block assembly on the DIN rail as shown in the figure 1.
4. Press the block assemblies until a click sound is produced, and tighten the DIN rail holding screw ⓐ to fix them to the DIN rail.
   ⚠**Caution** (Tightening torque: 1.4 N·m)
   (While lightly holding the blocks after fixing an end block on one side, tighten the other end block for for better sealing.)
5. Untighten the rail stopper bolt ⓓ to demount the connector box from the DIN rail, and when remounting it, tighten the bolt while pressing it against the rail.

Fig. (1) Block mounting procedure

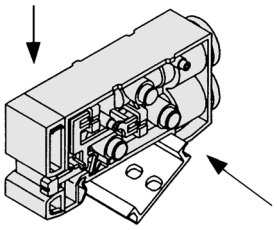

Hook the DIN rail here and press down in the direction of the arrow until a click sound is heard.

⚠Caution

Note 1) When there are 10 or fewer manifold block assemblies, and more are added to make a total of 11 or more, a supply/exhaust block assembly must also be added.

Note 2) When disassembly and assembly are performed, air leakage may result if connections between blocks and tightening of the end block's holding screw, is inadequate. Before supplying air, confirm that there are no gaps, etc. between blocks, and that manifold blocks are securely fastened to the DIN rail. Then supply air and confirm that there is no air leakage before operating.

Note 3) One connector assembly is necessary for one solenoid.
When a number is necessary for the connector assembly mark tube, suffix the number to the part no. (0 to 15 are provided as mark tube numbers.)
Ex) +COM spec.: D type for 2 to 8 stations: No. 10
SY3000-43-1A-10

How to Change Fitting Assembly

Type 45 manifold permits change in the A and B port sizes by changing the manifold block fitting assembly.
After removing the valve, remove the clip with a screwdriver, etc. For mounting a new fitting assembly, insert it and then insert a clip until it will not come out of the manifold block.

Fitting Assembly Part No.

Metric size

SY3000	One-touch fitting for ø4	VVQ1000-50A-C4
	One-touch fitting for ø6	VVQ1000-50A-C6
SY5000	One-touch fitting for ø4	VVQ1000-51A-C4
	One-touch fitting for ø6	VVQ1000-51A-C6
	One-touch fitting for ø8	VVQ1000-51A-C8

Inch size

SY3000	One-touch fitting for ø5/32"	VVQ1000-50A-N3
	One-touch fitting for ø1/4"	VVQ1000-50A-N7
SY5000	One-touch fitting for ø5/32"	VVQ1000-51A-N3
	One-touch fitting for ø1/4"	VVQ1000-51A-N7
	One-touch fitting for ø5/16"	VVQ1000-51A-N9

Note 1) P and R ports cannot be changed.
Note 2) Use caution that O-rings must be free from scratches and dust. Otherwise, air leakage may result.

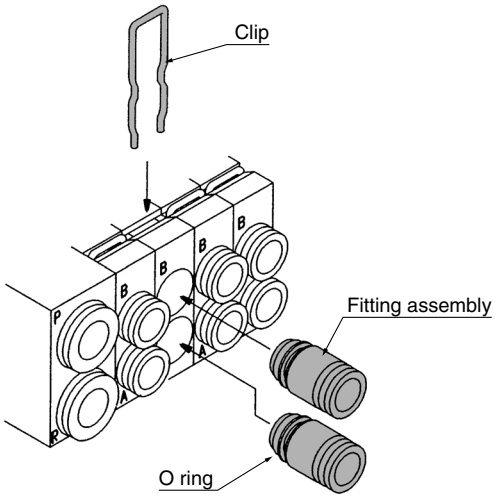

EX510 Gateway-type Serial Transmission System Base Mounted Manifold/Stacking Type

Type 45S6A Series SY3000/5000

How to Order Manifold

SS5Y 3 – 45S6A □ U – 02 U □ – C4 – □ – Q

Manifold series

3	SY3000
5	SY5000

SI unit

—	NPN output (+COM.)
N	PNP output (–COM.)

SI unit mounting position

U	U side
D	D side

Valve stations

Symbol	Stations	Note
02	2 stations	Double wiring Note 1)
⋮	⋮	
08	8 stations	
02	2 stations	Specified layout Note 2) (Compatible with 16 solenoid valves)
⋮	⋮	
16	16 stations	

• The number of the blanking plate assembly is also included.
Note 1) Double wiring: Use of a single solenoid will result in an unused control signal. If this is not desired, order with a specified layout.
Note 2) Specified layout: Indicate wiring specifications on the manifold specification sheet. (Note that double and 3 position valves cannot be used where single solenoid wiring has been specified.)

Option
When a DIN rail that is longer than the specified stations is desired, specify the required station number. (Max. 20 stations)

A, B port size

One-touch fitting (Metric size)

C4	One-touch fitting for ø4	SY3000
C6	One-touch fitting for ø6	
M	Mixed	
C4	One-touch fitting for ø4	SY5000
C6	One-touch fitting for ø6	
C8	One-touch fitting for ø8	
M	Mixed	

One-touch fitting (Inch size)

N3	One-touch fitting for ø5/32"	SY3000
N7	One-touch fitting for ø1/4"	
M	Mixed	
N3	One-touch fitting for ø5/32"	SY5000
N7	One-touch fitting for ø1/4"	
N9	One-touch fitting for ø5/16"	
M	Mixed	

• For the mixed specification, indicate separately on a manifold specification sheet.

Pilot specifications

—	Internal pilot
S	Internal pilot/built-in silencer
R	External pilot
RS	External pilot/built-in silencer

SUP/EXH block assembly mounting position

U	U side	2 to 10 stations
D	D side	
B	Both sides	2 to 16 stations
M	Special specifications*	

*For the special specifications, indicate separately on a manifold specification sheet.

SI unit part no.

Symbol	SI unit specifications	SI unit part no.
—	NPN output (+COM.)	EX510-S001
N	PNP output (–COM.)	EX510-S101

How to Order Manifold Assembly (Order Example)

Example

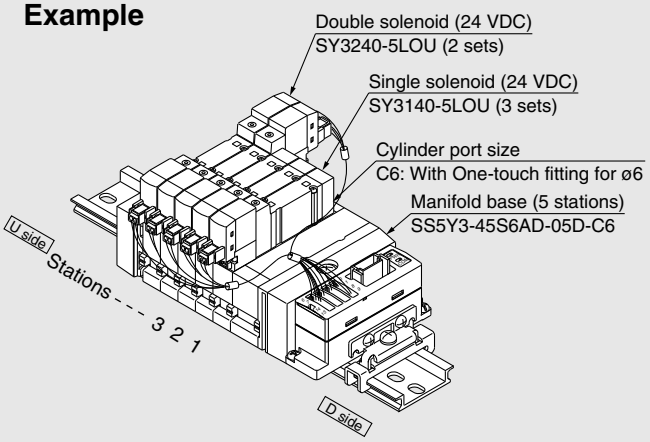

SS5Y3-45S6AD-05D-C6··· 1 set (45S6A type 5-station manifold part no.)
*** SY3140-5LOU ····· 3 sets (Single solenoid part no.)**
*** SY3240-5LOU ····· 2 sets (Double solenoid part no.)**
→The asterisk denotes the symbol for assembly. Prefix to the part no. of the solenoid valve, etc.

Add the valve and option part number under the manifold base part number.
When entry of part numbers becomes complicated, indicate by the manifold specification sheet. For a manifold for an EX510, the length of the lead wire for a connector assembly depends on the number of stations. Therefore, the manifold assembly is shipped with the valves (including blanking plates) and connector assembly mounted on it, as the standard specification. Be sure to specify the part nos. of the solenoid valves to be mounted.

How to Order Valves

SY 3 1 40 □ – 5 LO Z □ – □ – Q

Series

3	SY3000
5	SY5000

Type of actuation

1	2 position single
2	2 position double
3	3 position closed centre
4	3 position exhaust centre
5	3 position pressure centre

Pilot specifications

—	Internal pilot
R	External pilot

Rated voltage: 24 VDC

Light/Surge voltage suppressor

Z	With light/surge voltage suppressor
U	With light/surge voltage suppressor (non-polar type)

Manual override

—	Non-locking push type
D	Push-turn locking slotted type
E	Push-turn locking lever type

Made to Order

—	—
X90	Main valve fluororubber

∗ When ordering single unit of the base mounted type solenoid valve, the mounting screws and gaskets for the integrated manifold are supplied with the solenoid valve, but the stacking type gaskets are not included. When the stacking type gaskets are required, order them separately.

Dimensions

SY3000: SS5Y3-45S6A□D-Stations U-C4, N3 / C6, N7

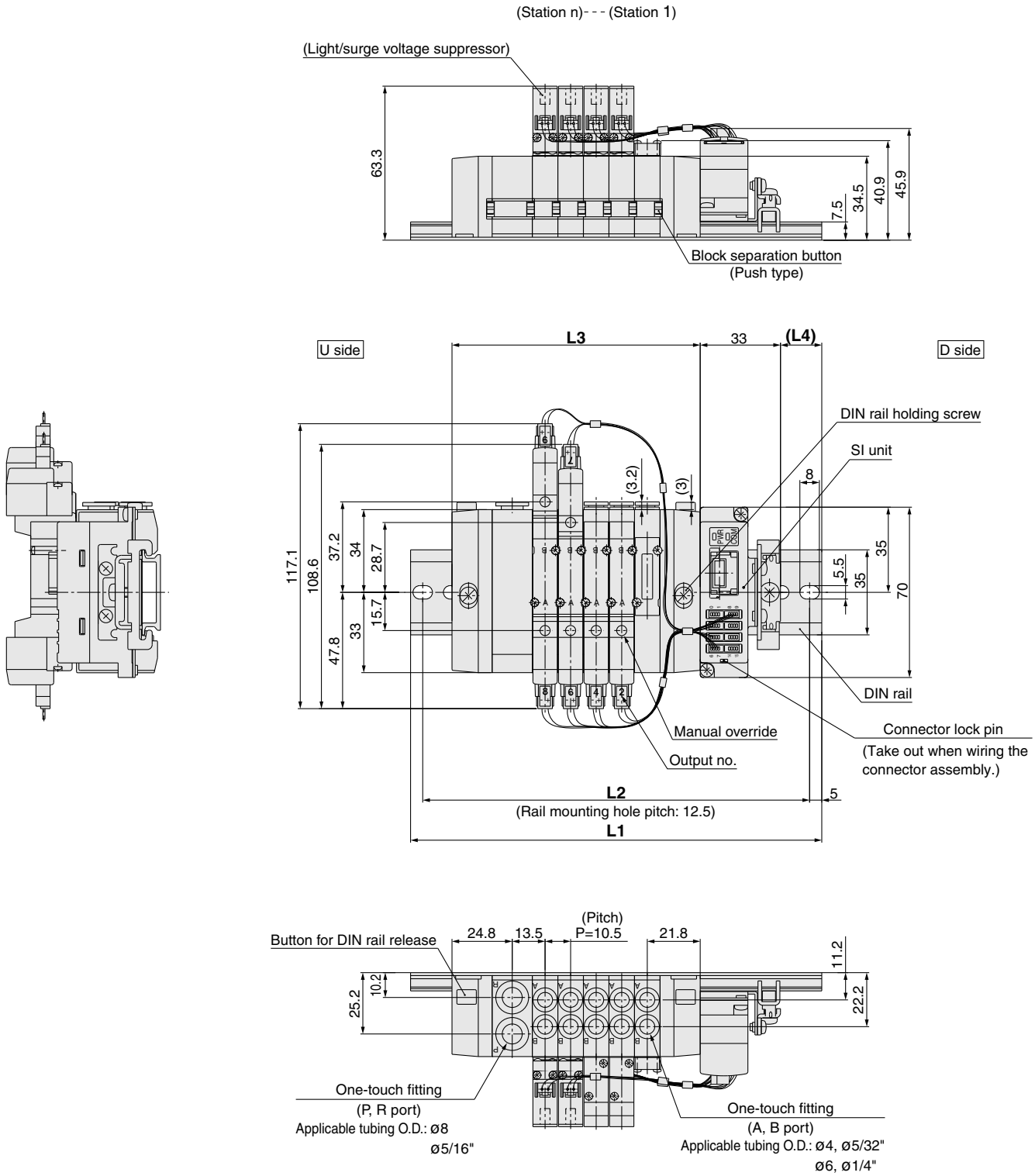

Stations n	**2** stations	**3**	**4**	**5**	**6**	**7**	**8**	**9**	**10** stations
L1	135.5	148	148	160.5	173	185.5	198	210.5	223
L2	125	137.5	137.5	150	162.5	175	187.5	200	212.5
L3	70.5	81	91.5	102	112.5	123	133.5	144	154.5
L4	16	17	12	13	14	15	16	17	18

SY3000: SS5Y3-45S6A□U-Stations B-C4, N3 C6, N7

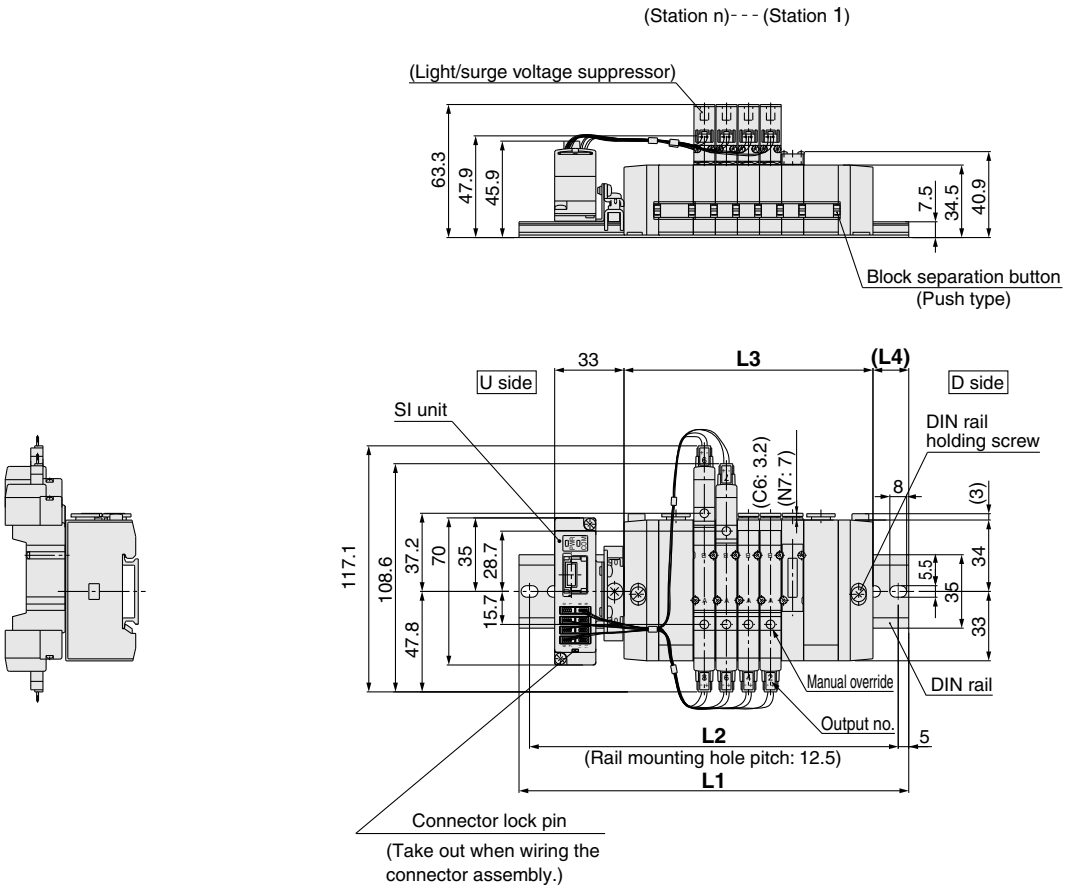

With interface regulator (with gauge)

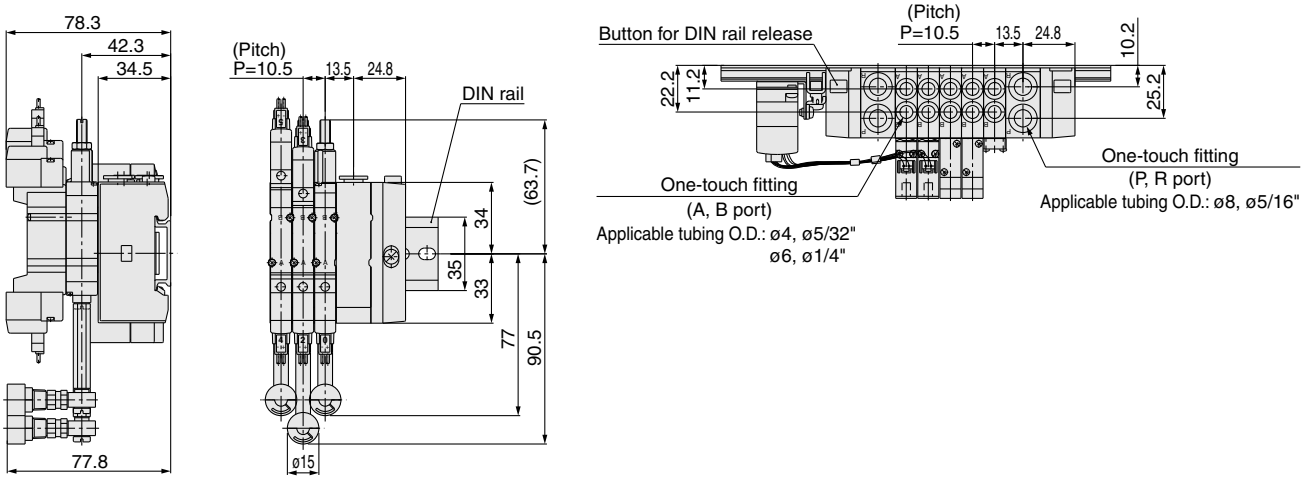

Stations n	**2** stations	**3**	**4**	**5**	**6**	**7**	**8**	**9**	**10**	**11**	**12**	**13**	**14**	**15**	**16** stations
L1	148	160.5	173	185.5	185.5	198	210.5	223	235.5	248	260.5	260.5	273	285.5	298
L2	137.5	150	162.5	175	175	187.5	200	212.5	225	237.5	250	250	262.5	275	287.5
L3	87	97.5	108	118.5	129	139.5	150	160.5	171	181.5	192	202.5	213	223.5	234
L4	14	15	16	17	12	13	14	15	16	17	18	12.5	13.5	14.5	15.5

Dimensions

SY5000: SS5Y5-45S6A□D-Stations U-C4, N3 / C6, N7 / C8, N9

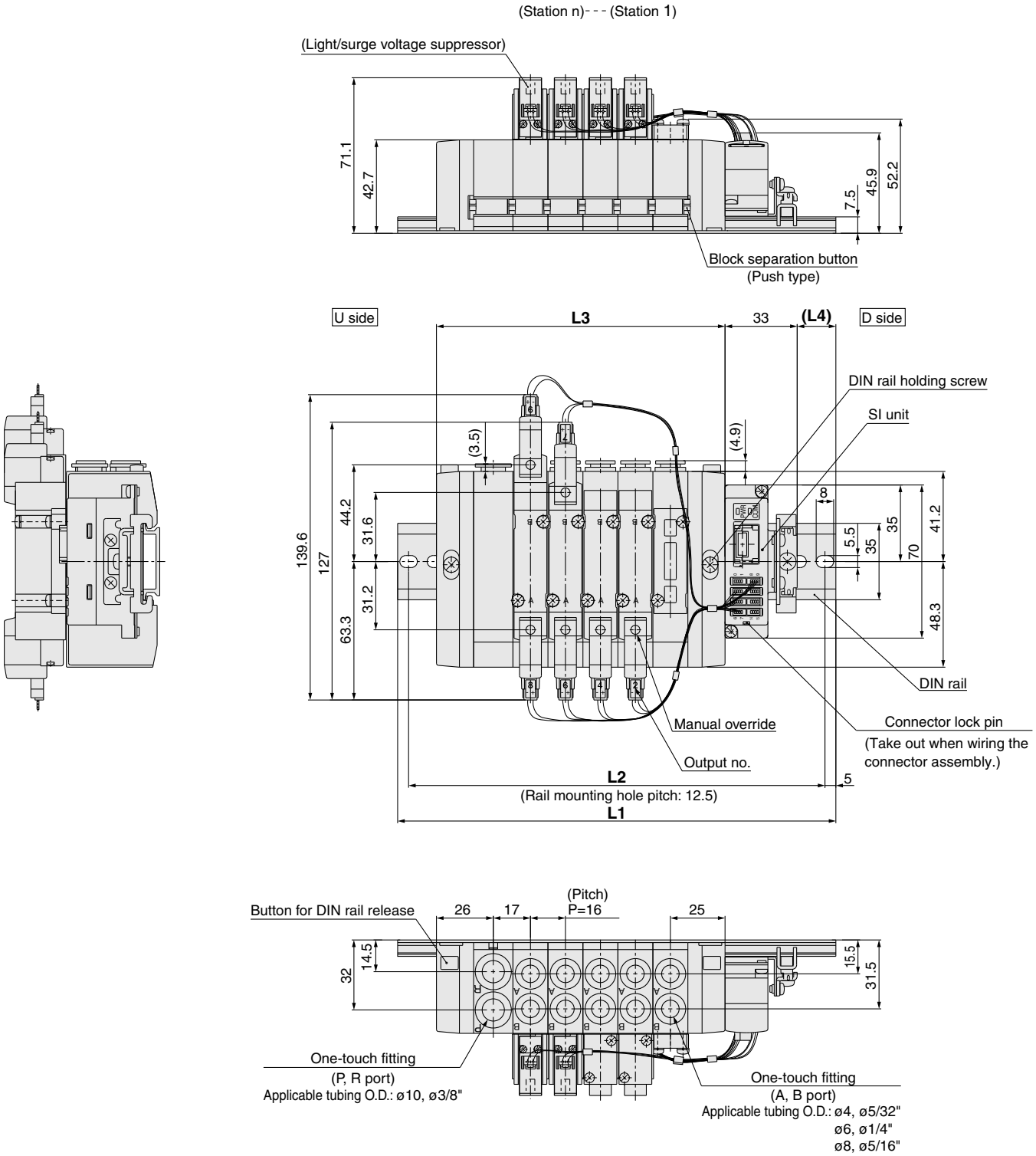

Stations n	**2** stations	**3**	**4**	**5**	**6**	**7**	**8**	**9**	**10** stations
L1	148	160.5	173	198	210.5	223	248	260.5	273
L2	137.5	150	162.5	187.5	200	212.5	237.5	250	262.5
L3	84	100	116	132	148	164	180	196	212
L4	15.5	14	12	16.5	15	13	17.5	16	14

SY5000: SS5Y5-45S6A ☐ U- Stations B- C4, N3 / C6, N7 / C8, N9

With interface regulator (with gauge)

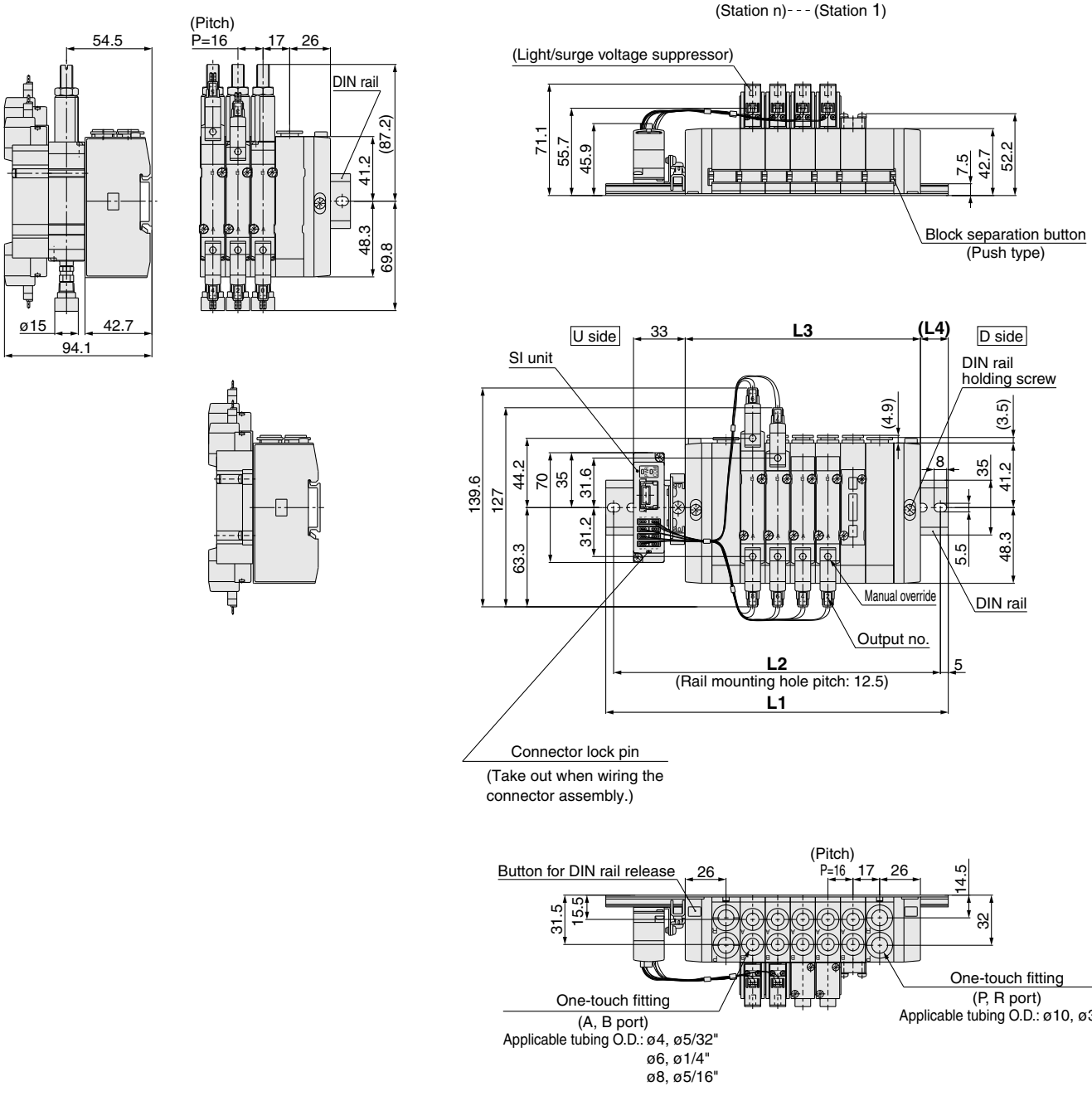

Stations n	2 stations	3	4	5	6	7	8	9	10	11	12	13	14	15	16 stations
L1	160.5	185.5	198	210.5	223	248	260.5	273	298	310.5	323	335.5	360.5	373	385.5
L2	150	175	187.5	200	212.5	237.5	250	262.5	287.5	300	312.5	325	350	362.5	375
L3	102	118	134	150	166	182	198	214	230	246	262	278	294	310	326
L4	13	17.5	15.5	14	12	16.5	15	13	17.5	16	14	12.5	17	15	13.5

Manifold Option

■ **Connector assembly**

For single solenoid (SY3000-37-81A-□-N)

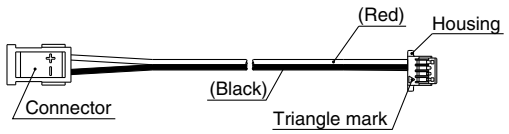

For double solenoid (SY3000-37-81A-□-□)

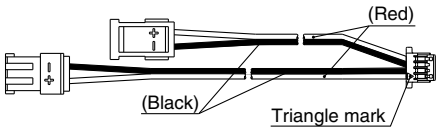

Connector assembly order no. (Can be used for the manifold without a specified layout (8 stations or less))
Integrated type

Model	Part no.	Connector mounting position
SS5Y3-45S6A	SY3000-37-81A-3-N	Single : Starting from the SI unit side From unit 1 to unit 4
	SY3000-37-81A-3-3	Double/3 position: Starting from the SI unit side From unit 1 to unit 4
	SY3000-37-81A-4-N	Single : Starting from the SI unit side From unit 5 to unit 8
	SY3000-37-81A-4-4	Double/3 position: Starting from the SI unit side From unit 5 to unit 8
SS5Y5-45S6A	SY3000-37-81A-4-N	Single : Starting from the SI unit side From unit 1 to unit 4
	SY3000-37-81A-4-4	Double/3 position: Starting from the SI unit side From unit 1 to unit 4
	SY3000-37-81A-6-N	Single : Starting from the SI unit side From unit 5 to unit 8
	SY3000-37-81A-6-6	Double/3 position: Starting from the SI unit side From unit 5 to unit 8
SS5Y9- $^{23}_{43}$ SA	SY3000-37-81A-4-N	Single : For 1 to 4 stations
	SY3000-37-81A-4-9	Double/3 position: For 1 to 4 stations
	SY3000-37-81A-6-N	Single : For 5 to 8 stations
	SY3000-37-81A-6-11	Double/3 position: For 5 to 8 stations

Note) The above is for the station addition or maintenance. When ordering a connector assembly separately, a number would not be printed on the connector.

■ **Connector assembly**
SY3000-37-80A-□

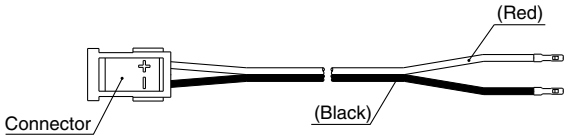

■ **Housing (8 pcs./set)**
SY3000-44-3A

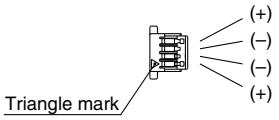

Connector assembly order no. (Can be used for the manifold with a specified layout)

Model	Part no.	Connector mounting position
SS5Y3-45S6A	SY3000-37-80A-3	Starting from the SI unit side: From unit 1 to unit 4
	SY3000-37-80A-4	Starting from the SI unit side: From unit 5 to unit 8
	SY3000-37-80A-6	Starting from the SI unit side: From unit 9 to unit 12
	SY3000-37-80A-7	Starting from the SI unit side: From unit 13 to unit 16
SS5Y5-45S6A	SY3000-37-80A-4	Starting from the SI unit side: From unit 1 to unit 4
	SY3000-37-80A-6	Starting from the SI unit side: From unit 5 to unit 8
	SY3000-37-80A-8	Starting from the SI unit side: From unit 9 to unit 12
	SY3000-37-80A-10	Starting from the SI unit side: From unit 13 to unit 16

Note 1) The above is for station addition or maintenance. When ordering a connector assembly separately, a number will not be printed on the connector.
Note 2) After inserting the connector assembly into the housing, be sure to confirm that the lead wire will not come off by lightly pulling the wire. Furthermore, do not reuse the lead wire after it has been inserted and removed.
Note 3) Wiring is set longer than the actual wiring distance.

verblockbar/DIN-Schienenmontage/individuelle Verdrahtung: Zubehör für Mehrfachanschlussplatte

▪ Abdeckplatte

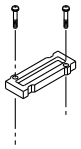

(Die Form variiert je nach Serie.)

Serie	Bestell-Nr.
SY3000	SX3000-75-1A(-Q)
SY5000	SX5000-76-5A(-Q)

∗ **Gewindetyp**

Nil	Rc
F	G
N	NPT
T	NPTF

⚠ Achtung

Anzugsdrehmoment für Befestigungsschrauben

M2: 0.16 Nm
M3: 0.8 Nm
M4: 1.4 Nm

5 Port Solenoid Valve
Series SY3000/5000
Base Mounted
Stacking Type/DIN Rail Mounted
Plug-in

Type 45□

How to Order Manifold

Type 45F (D-sub connector, 25 pins)

SS5Y 3 – 45 □ F D – 05 U – C4 □ □ -Q

Series

3	SY3000
5	SY5000

Common specifications

-	Positive common
N	Negative common

Connector mounting position

Symbol	Mounting position
U	U side
D	D side

Valve stations

Symbol	Stations	Note
02	2 stations	Single wining spec. (Applicable up to 20 solenoid valves.)
⋮	⋮	
20	20 stations	

∗ This also includes the number of blanking plate assemblies.
∗ Two stations are necessary for the double and 3 position solenoid valves (Dual body type).

SUP/EXH block assembly mounting position

Symbol	Mounting position	Stations
U	U side	2 to 10 stations
D	D side	2 to 10 stations
B	(Both sides)	2 to 20 stations
M	Special specifications	

∗ For special specifications, indicate separately by the manifold specification sheet.

A, B port size

One-touch fitting (Metric size)

Symbol	Port size	Applicable series
C4	One-touch fitting for ø4	SY3000
C6	One-touch fitting for ø6	
M	Mixed	
C4	One-touch fitting for ø4	SY5000
C6	One-touch fitting for ø6	
C8	One-touch fitting for ø8	
M	Mixed	

One-touch fitting (Inch size)

Symbol	Port size	Applicable series
N3	One-touch fitting for ø5/32"	SY3000
N7	One-touch fitting for ø1/4"	
M	Mixed	
N3	One-touch fitting for ø5/32"	SY5000
N7	One-touch fitting for ø1/4"	
N9	One-touch fitting for ø5/16"	
M	Mixed	

∗ In the case of mixed specifications (M), indicate separately on the manifold specification sheet.

Voltage

-	24 VDC
12V	12 VDC

Option

When a longer DIN rail is desired than the specified stations, specify the station number to be required. (20 stations at maximum)

For external pilot specifications and built-in silencer, refer to page 208.

How to Order Valve Manifold Assembly (Example)

Example (Type 45F/D-sub connector (25 pin))

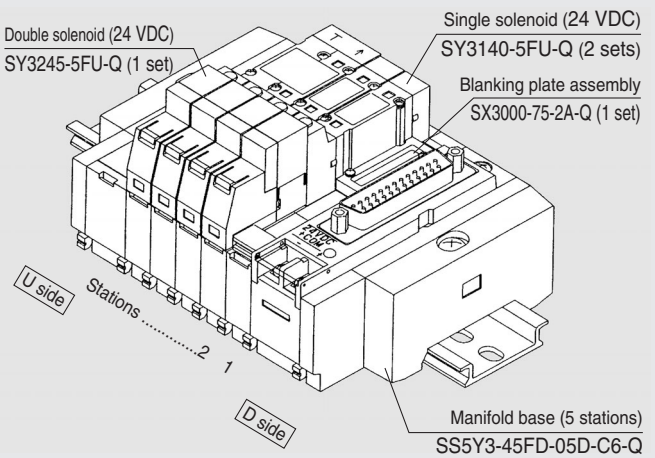

SS5Y3-45FD-05U-C6-Q **1 set** (Type 45F, D-sub connector 5 port manifold base part no.)
∗ **SX3000-75-2A-Q** **1 set (Blanking plate assembly part no)**
∗ **SY3140-5FU-Q** **2 sets (Single solenoid part no.)**
∗ **SY3245-5FU-Q** **1 set (Double solenoid part no.)**

The asterisk denotes the symbol for assembly.
Prefix it to the part nos. of the solenoid valve, etc.

- The valve arrangement is numbered as the 1st. station from D side regardless of the mounting position of connector box.
- When ordering double solenoid valves/3 position (Dual body type), please keep in mind that they require two manifold stations.

How to Order Valve (Type 45F, 45P□, 45T, 45T1)

2 position single SY 3 1 40 – 5 FU □ – □ -Q

Double, 3 position SY 3 2 45 – 5 FU □ – □ -Q

Series

3	SY3000
5	SY5000

Type of actuation

2	2 position double
3	3 position closed centre
4	3 position exhaust centre
5	3 position pressure centre

Dual body type (Double, 3 position)

Rated voltage

5	24 VDC
6	12 VDC

Manual override

—	Non-locking push type
D	Push-turn locking slotted type
E	Push-turn locking lever type

Made to Order

-	—
X90	Main valve fluororubber

∗ When ordering plug-in type solenoid valve as a single unit, gaskets are not included. Order them separately, if necessary.
∗ With light/surge voltage suppressor (Non-polar type)

How to Order Manifold

Type 45P□ (Flat ribbon cable)

SS5Y 3 – 45 □ P □ D – 05 U – C4 – □ – □ -Q

Series

3	SY3000
5	SY5000

Common specifications

-	Positive common
N	Negative common

Connector poles

Symbol	Poles	Stations
-	26	2 to 20 stations
G	20	2 to 16 stations
H	10	2 to 8 stations

Connector mounting position

Symbol	Mounting position
U	U side
D	D side

Valve stations (Blanking plate assemblies are included.)

26 pins (P) connector

Symbol	Stations	Note
02	2 stations	Single wiring spec. (Applicable up to 20 solenoid valves.)
⋮	⋮	
20	20 stations	

20 pins (PG) connector

Symbol	Stations	Note
02	2 stations	Single wiring spec. (Applicable up to 16 solenoid valves.)
⋮	⋮	
16	16 stations	

10 pins (PH) connector

Symbol	Stations	Note
02	2 stations	Single wiring spec. (Applicable up to 8 solenoid valves)
⋮	⋮	
08	8 stations	

• Two stations are necessary for the double, 3 position (Dual body type).

SUP/EXH block assembly mounting position

Symbol	Mounting position	Stations
U	U side	2 to 10 stations
D	D side	2 to 10 stations
B	Both sides	2 to 20 stations
M	Special specifications	

∗ For special specifications, indicate separately by the manifold specification sheet.

A, B port size

One-touch fitting (Metric size)

Symbol	Port size	Applicable series
C4	One-touch fitting for ø4	SY3000
C6	One-touch fitting for ø6	
M	Mixed	
C4	One-touch fitting for ø4	SY5000
C6	One-touch fitting for ø6	
C8	One-touch fitting for ø8	
M	Mixed	

One-touch fitting (Inch size)

Symbol	Port size	Applicable series
N3	One-touch fitting for ø5/32"	SY3000
N7	One-touch fitting for ø1/4"	
M	Mixed	
N3	One-touch fitting for ø5/32"	SY5000
N7	One-touch fitting for ø1/4"	
N9	One-touch fitting for ø5/16"	
M	Mixed	

∗ In the case of mixed specifications, indicate separately on the manifold specification sheet.

Option

When a longer DIN rail is desired than the specified stations, specify the station number to be required. (20 stations at maximum)

Voltage

-	24 VDC
12V	12 VDC

Type 45T (9 pins terminal block)

SS5Y 3 – 45T D – 05 U – C4 – □ -Q

Series

3	SY3000
5	SY5000

Terminal block mounting position

Symbol	Mounting position
U	U side
D	D side

Valve stations

Symbol	Stations	Note
02	2 stations	Single wiring spec. (Applicable up to 8 solenoid valves)
⋮	⋮	
08	8 stations	

∗ This also includes the number of blanking plate assemblies.
∗ Two stations are necessary for the double, 3 position (Dual body type).

SUP/EXH block assembly mounting position

Symbol	Mounting position	Stations
U	U side	2 to 8 stations
D	D side	2 to 8 stations
B	Both sides	2 to 8 stations
M	Special specifications	

∗ For special specifications, indicate separately by the manifold specification sheet.

A, B port size

One-touch fitting (Metric size)

Symbol	Port size	Applicable series
C4	One-touch fitting for ø4	SY3000
C6	One-touch fitting for ø6	
M	Mixed	
C4	One-touch fitting for ø4	SY5000
C6	One-touch fitting for ø6	
C8	One-touch fitting for ø8	
M	Mixed	

One-touch fitting (Inch size)

Symbol	Port size	Applicable series
N3	One-touch fitting for ø5/32"	SY3000
N7	One-touch fitting for ø1/4"	
M	Mixed	
N3	One-touch fitting for ø5/32"	SY5000
N7	One-touch fitting for ø1/4"	
N9	One-touch fitting for ø5/16"	
M	Mixed	

∗ In the case of mixed specifications (M), indicate separately on the manifold

Option

When a longer DIN rail is desired than the specified stations, specify the station number to be required.

Type 45T1 (18 pins terminal block)

SS5Y 3 – 45T1 D – 15 B – C4 – □ -Q

Series

3	SY3000
5	SY5000

Terminal block mounting position

Symbol	Mounting position
U	U side
D	D side

Valve stations

Symbol	Stations	Note
02	2 stations	Single wining spec. (Applicable up to 17 solenoid valves.)
⋮	⋮	
17	17 stations	

∗ This also includes the number of blanking plate assemblies.
∗ Two stations are necessary for the double, 3 position (Dual body type).

SUP/EXH block assembly mounting position

Symbol	Mounting position	Stations
U	U side	2 to 10 stations
D	D side	2 to 10 stations
B	Both sides	2 to 17 stations
M	Special specifications	

∗ For special specifications, indicate separately by the manifold specification sheet.

A, B port size

One-touch fitting (Metric size)

Symbol	Port size	Applicable series
C4	One-touch fitting for ø4	SY3000
C6	One-touch fitting for ø6	
M	Mixed	
C4	One-touch fitting for ø4	SY5000
C6	One-touch fitting for ø6	
C8	One-touch fitting for ø8	
M	Mixed	

One-touch fitting (Inch size)

Symbol	Port size	Applicable series
N3	One-touch fitting for ø5/32"	SY3000
N7	One-touch fitting for ø1/4"	
M	Mixed	
N3	One-touch fitting for ø5/32"	SY5000
N7	One-touch fitting for ø1/4"	
N9	One-touch fitting for ø5/16"	
M	Mixed	

∗ In the case of mixed specifications (M), indicate separately on the manifold

Option

When a longer DIN rail is desired than the specified stations, specify the station number to be required.

Note) The terminal block (45T□) manifold has no common polarity. It can be used for both positive and negative common.

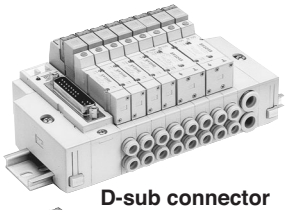

D-sub connector

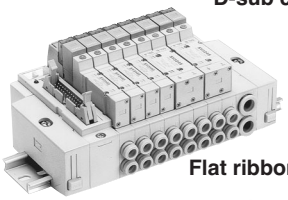

Flat ribbon cable

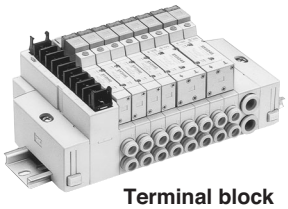

Terminal block

Manifold Specifications

Model			D-sub connector Type 45F	Flat ribbon cable Type 45PI			Terminal block	
				Type 45P	Type 45PG	Type 45PH	Type 45T	Type 45T1
Manifold			Plug-in					
P (SUP)/R (EXH)			Common SUP, Common EXH					
Valve stations Note 1, 2)			2 to 20 stations		2 to 16 stations	2 to 8 stations		2 to 17 stations
A, B port Porting specifications		**Location**	Base					
		Direction	Side					
Port size	**P, R port**	**SY3000**	C8 (One-touch fitting for ø8)					
		SY5000	C10 (One-touch fitting for ø10)					
	A, B port	**SY3000**	C4 (One-touch fitting for ø4)/C6 (One-touch fitting for ø6)					
		SY5000	C4 (One-touch fitting for ø4)/C6 (One-touch fitting for ø6)/C8 (One-touch fitting for ø8)					
Applicable connector			D-sub connector Complies with MIL-C-24308 JIS-X-5101	Flat ribbon cable connector Socket: 26 pins MIL type with strain relief Conforming to MIL-C-83503	Flat ribbon cable connector Socket: 20 pins MIL type with strain relief Conforming to MIL-C-83503	Flat ribbon cable connector Socket: 10 pins MIL type with strain relief Conforming to MIL-C-83503	Terminal block (M3) 9 pins	Terminal block (M3) 18 pins
Internal wiring			+COM (Type 45□), –COM (Type 45N□)				In common between +COM and –COM.	
Manifold base weight W (g) n: Stations (D-sub connector)		**SY3000**	2 to 10 stations: W = 26n + 172 11 to 20 stations: W = 26n + 199					
		SY5000	2 to 10 stations: W = 54n + 227 11 to 20 stations: W = 52n + 264					

Note 1) For more than 11 stations, supply pressure to P port on both sides and exhaust from R port on both sides.
Note 2) There is a limit depending on the number of solenoids. Refer to “How to Order”.

Flow Rate Characteristics

Model	Port size		Flow rate characteristics					
	1 ,5 ,3 (P ,EA ,EB)	4 ,2 (A ,B)	1→4/2 (P→A/B)			4/2→5/3 (A/B→EA/EB)		
			C (dm³/(s·bar))	b	Cv	C (dm³/(s·bar))	b	Cv
SS5Y3-45□	C8	C6	0.88	0.21	0.22	0.95	0.18	0.22
SS5Y5-45□	C10	C8	2.2	0.24	0.53	2.5	0.18	0.58

Note) The value is for manifold base with 5 stations and individually operated 2 position type.

Manifold Option

▪ D-sub connector (25 pins)/Cable assembly

GVVZS3000-21A- 1/2/3/4/5 **-** S/60

(The D-sub connector cable ass'y can be ordered individually or included in a specific manifold model no. Refer to "How to Order Manifold".)

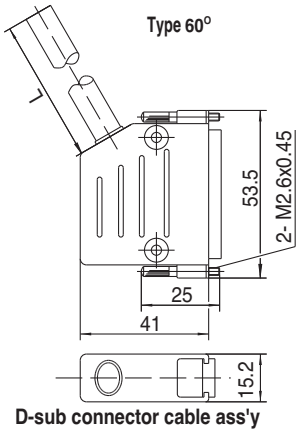

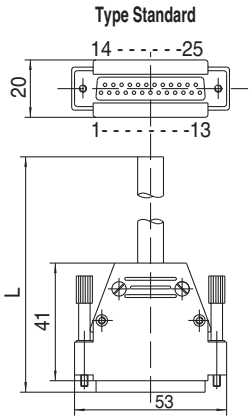

D-sub connector cable ass'y

Cable length (L)	Ass'y No.
1m*	GVVZS3000-21A-1□
3m	GVVZS3000-21A-2□
5m	GVVZS3000-21A-3□
8m	GVVZS3000-21A-4□
20m	GVVZS3000-21A-5S

* Standard type is not available for the cable length of 1m.

Model

Shielded cable	**S**
60 connector	**60**
Standard	**-**

Electric characteristics

Item	Characteristics
Conductor resistance /km, 20˚C	57 or less
Voltage limit V, 5min, AC	1500
Insulation resistance M/km	20

Wire color table by terminal number of D-sub connector cable assembly

Terminal No.	Lead wire colour	Dot marking
1	White	–
2	Brown	–
3	Green	–
4	Yellow	–
5	Grey	–
6	Pink	–
7	Blue	–
8	Red	–
9	Black	–
10	Violet	–
11	Grey	Pink
12	Red	Blue
13	White	Green
14	Brown	Green
15	White	Yelow
16	Yelow	Brown
17	White	Grey
18	Grey	Brown
19	White	Pink
20	Pink	Brown
21	White	Blue
22	Brown	Blue
23	White	Red
24	Brown	Red
25	White	Black

∗ Connector made in conformity with DIN47100.

▪ Flat Ribbon Cable Connector/Cable assembly

AXT100-FC 10/20/26 **-** 1/2/3

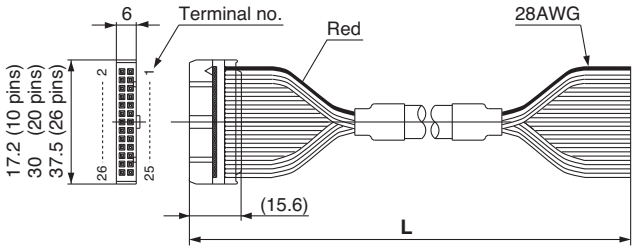

▪ Dimensions/DIN rail

VZ1000 - 11 - 1 - □

● Refer to L dimensions

∗ Fill in □ with an appropriate no. listed on the table of

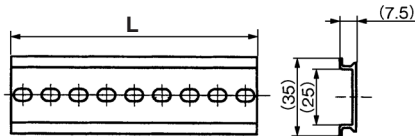

Flat ribbon cable connector

Cable length (**L**)	Assembly part no.		
	26 pins	20 pins	10 pins
1.5 m	AXT100-FC26-1	AXT100-FC20-1	AXT100-FC10-1
3 m	AXT100-FC26-2	AXT100-FC20-2	AXT100-FC10-2
5 m	AXT100-FC26-3	AXT100-FC20-3	AXT100-FC10-3

∗ When using a standard commercial connector, use a 26-pin, 20-pin, or 10-pin type connector conforming to MIL-C-83503 with strain relief.
∗ Cannot be used for movable wiring
∗ Lengths other than the above are also available. Please contact SMC for details.

Connector Manufacturers' Example
- HIROSE ELECTRIC CO., LTD.
- 3M Japan Limited
- Fujitsu Limited
- Japan Aviation Electronics Industry, Limited
- J.S.T. Mfg. Co., Ltd.
- Oki Electric Cable Co., Ltd.

No.	0	1	2	3	4	5	6	7	8	9	10
L Dimension	98	110.5	123	135.5	148	160.5	173	185.5	198	210.5	223
No.	11	12	13	14	15	16	17	18	19	20	21
L Dimension	235.5	248	260.5	273	285.5	298	310.5	323	335.5	348	360.5
No.	22	23	24	25	26	27	28	29	30	31	32
L Dimension	373	385.5	398	410.5	423	435.5	448	460.5	473	485.5	498
No.	33	34	35	36	37	38	39	40	41	42	43
L Dimension	510.5	523	535.5	548	560.5	573	585.5	598	610.5	623	635.5
No.	44	45	46	47	48	49	50	51	52	53	54
L Dimension	648	660.5	673	685.5	698	710.5	723	735.5	748	760.5	773
No.	55	56	57	58	59	60	61	62	63	64	65
L Dimension	785.5	798	810.5	823	835.5	848	860.5	873	885.5	898	910.5
No.	66	67	68	69	70	71					
L Dimension	923	935.5	948	960.5	973	985.5					

∗ Refer to L1 dimension on pages starting with page 145 for lengths that correspond to the number of manifold stations.

Manifold Internal Wiring

45(N)F/D-sub Connector

A D-sub connector used for electric wiring reduces labor during wiring operation. Connectors conforming to MIL are used for interchangeability.

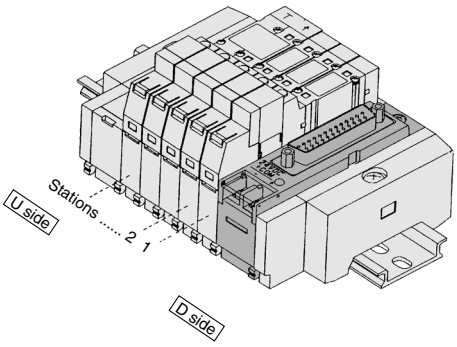

<For positive common (45F)>

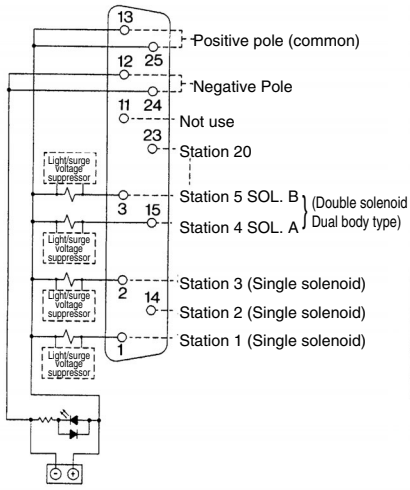

<For negative common (45NF)>

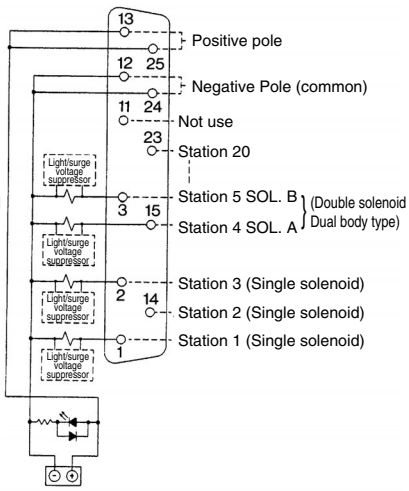

- The power source terminal is used for connecting to an external power source.
- The maximum number of stations that can be accommodated is 20 manifold stations, with up to 20 solenoids.(For more stations, please contact SMC.)
- Regardless of the connector mounting position, stations are to be counted from D side as the 1st one.

Type 45(N)P/Flat Ribbon Cable (26 pins)

A flat cable connector used for electric wiring reduces labor during wiring operation. Connectors conforming to MIL are used for interchangeability.

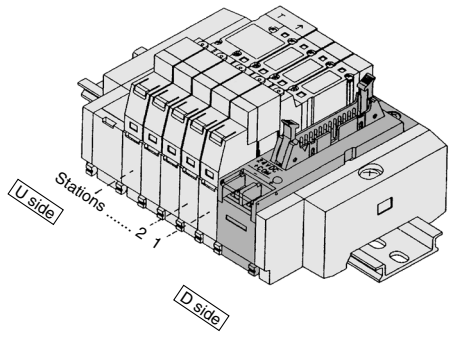

<For positive common (45P)>

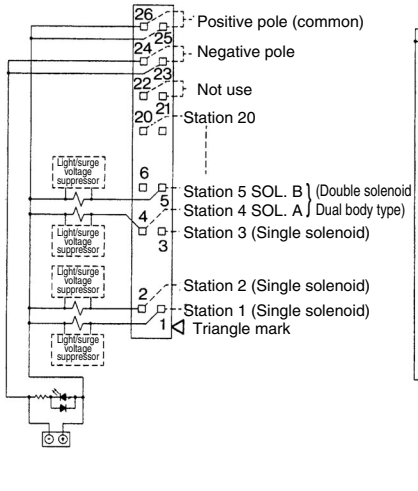

<For negative common (45NP)>

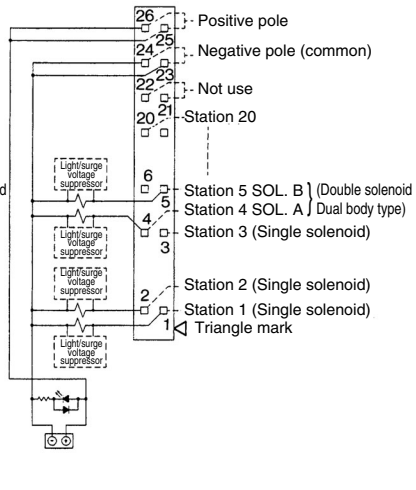

- The power source terminal is used for connecting to an external power source.
- The maximum number of stations that can be accommodated is 20 manifold stations, with up to 20 solenoids. (For more stations, please contact SMC.)
- Regardless of the connector mounting position, stations are to be counted from D side as the 1st one.

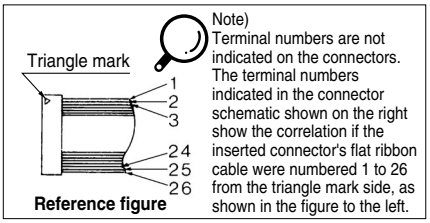

Note)
Terminal numbers are not indicated on the connectors. The terminal numbers indicated in the connector schematic shown on the right show the correlation if the inserted connector's flat ribbon cable were numbered 1 to 26 from the triangle mark side, as shown in the figure to the left.

Manifold Internal Wiring

Type 45(N)PG/Flat Ribbon Cable (20 pins)

A flat cable connector used for electric wiring reduces labor during wiring operation. Connectors conforming to MIL are used for interchangeability.

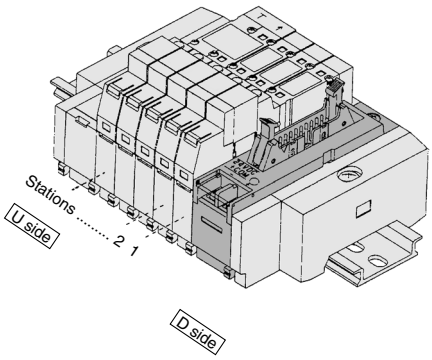

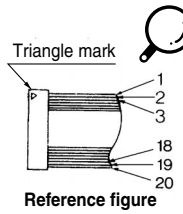

Reference figure

Note)
Terminal numbers are not indicated on the connectors. The terminal numbers indicated in the connector schematic shown on the right show the correlation if the inserted connector's flat ribbon cable were numbered 1 to 26 from the triangle mark side, as shown in the figure to the left.

<For positive common (45PG)> **<For negative common (45NPG)>**

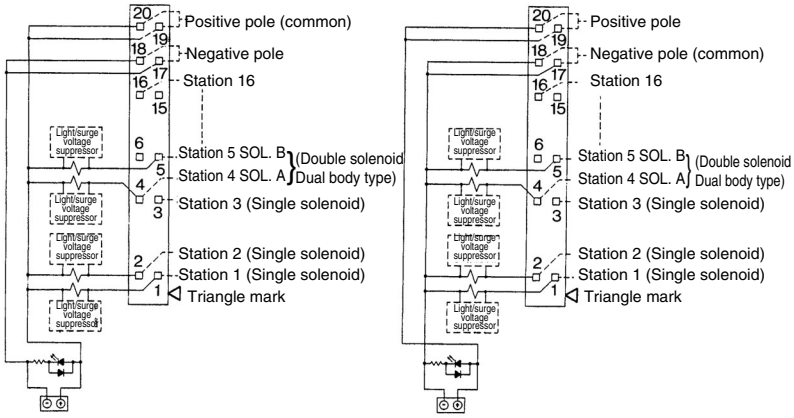

- The power source terminal is used for connecting to an external power source.
- The maximum number of stations that can be accommodated is 16 manifold stations, with up to 16 solenoids. (For more stations, please contact SMC.)
- Regardless of the connector mounting position, stations are to be counted from D side as the 1st one.

Type 45(N)PH/Flat Ribbon Cable (10 pins)

A flat cable connector used for electric wiring reduces labor during wiring operation. Connectors conforming to MIL are used for interchangeability.

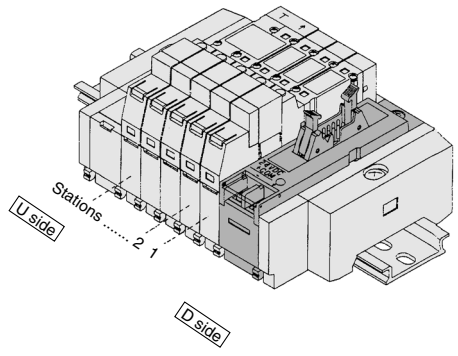

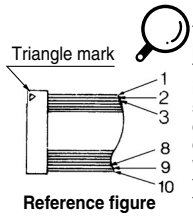

Reference figure

Note)
Terminal numbers are not indicated on the connectors. The terminal numbers indicated in the connector schematic shown on the right show the correlation if the inserted connector's flat ribbon cable were numbered 1 to 26 from the triangle mark side, as shown in the figure to the left.

<For positive common (45PH)> **<For negative common (45NPH)>**

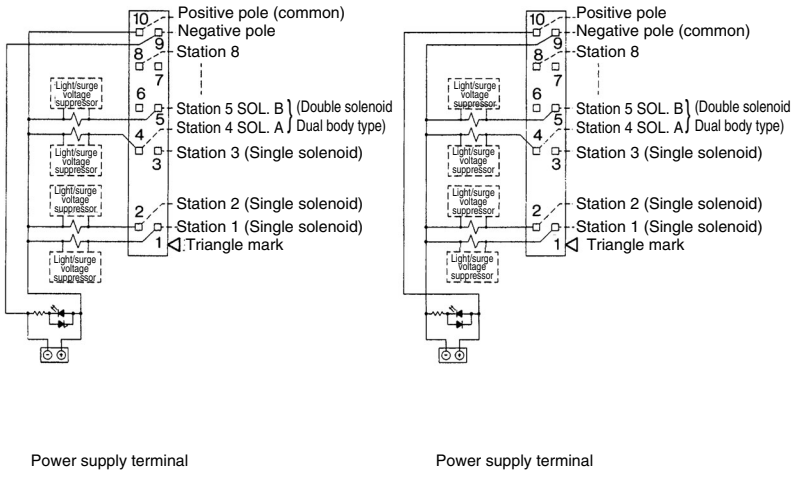

- The power source terminal is used for connecting to an external power source.
- The maximum number of stations that can be accommodated is 8 manifold stations, with up to 8 solenoids. (For more stations, please contact SMC.)
- Regardless of the connector mounting position, stations are to be counted from D side as the 1st one.

Manifold Internal Wiring

Type 45T/Terminal Block

A terminal block style permits direct cable connection without treatment of lead wires.

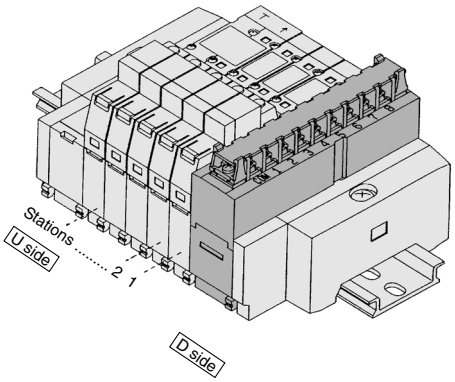

(45T)

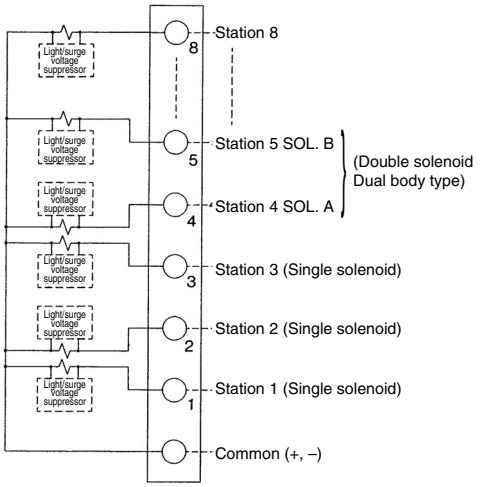

- The maximum number of stations that can be accommodated is 8 manifold stations, with up to 8 solenoids. (For more stations, please contact SMC.)
- Regardless of the connector mounting position, stations are to be counted from D side as the 1st one.
- There is no polarity in the COM wiring. Supply positive power for +COM spec. and negative power for –COM spec.

Type 45T1/Terminal Block

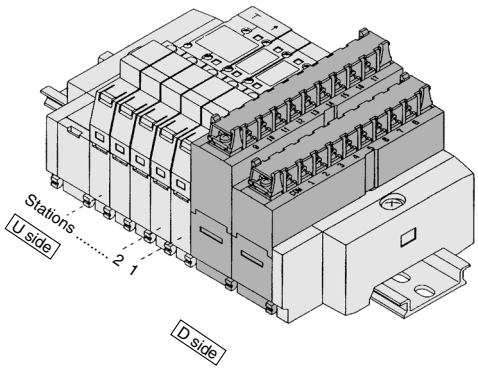

(45T1)

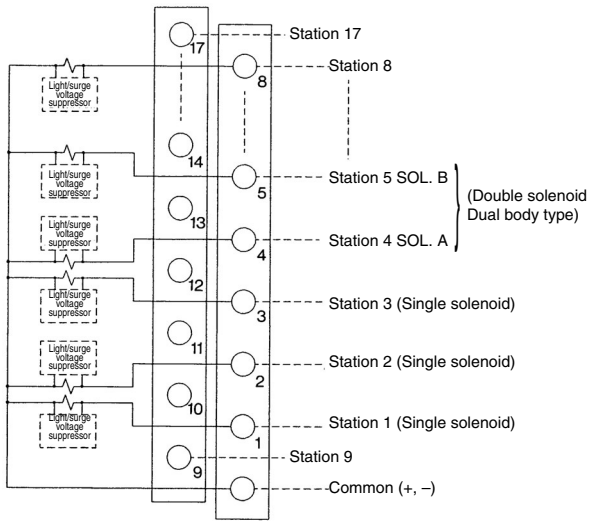

- The maximum number of stations that can be accommodated is 17 manifold stations, with up to 17 solenoids. (For more stations, please contact SMC.)
- Regardless of the connector mounting position, stations are to be counted from D side as the 1st one.
- There is no polarity in the COM wiring. Supply positive power for +COM spec. and negative power for –COM spec.

How to Connect SS5Y□-45□ (Plug-in)

Power terminal is equipped with plug-in manifold of Series SY as standard.
Power terminal enables the power supply to valve from either of manifold or controller side.

1. Wiring example when using manifold power supply terminals

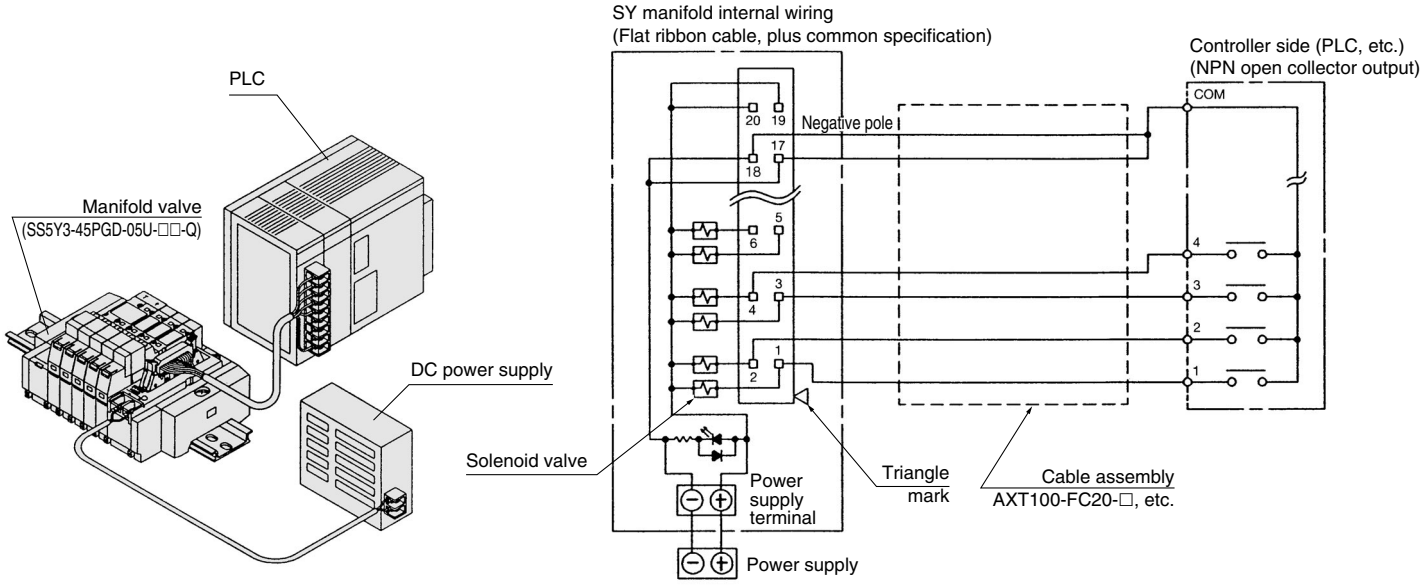

2. Wiring example when not using manifold power supply terminals (Power is supplied to the controller side or along the wiring, etc.)

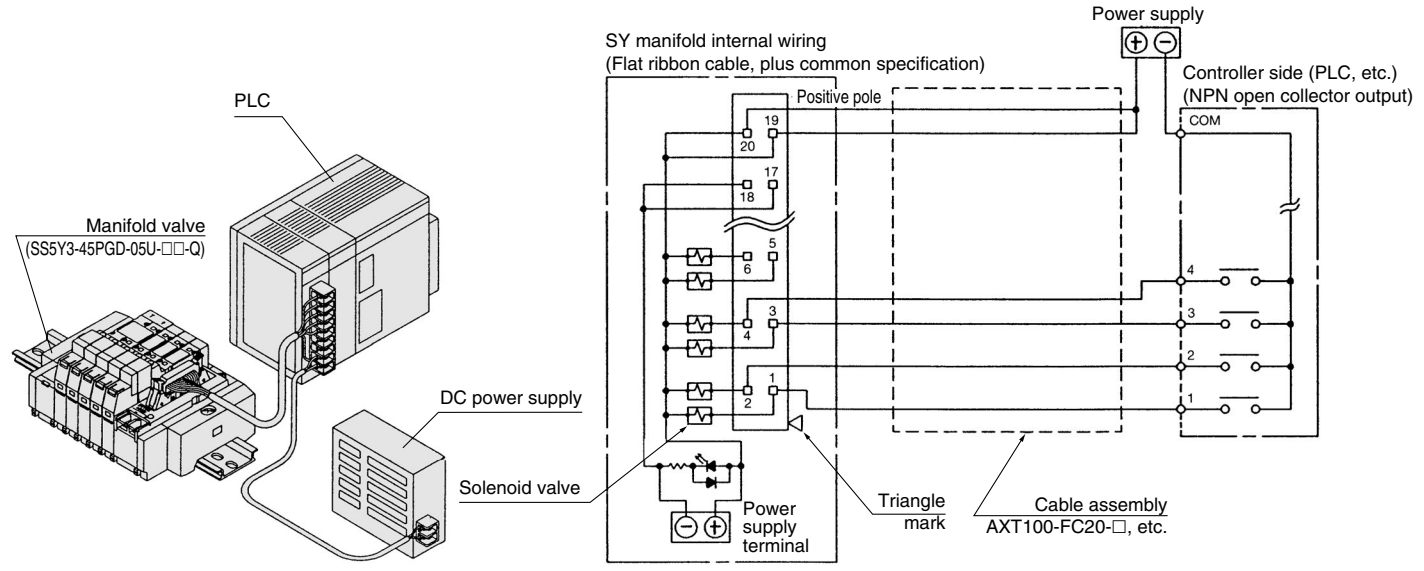

⚠Caution

- Single wire, COM position, etc. of PLC are different from each manufacturer. When connecting with PLC, read the specifications carefully and understand the electrical circuit. Poor wiring could cause damage to PLC, power source, etc. as well as manifold and valve.

SY3000: D-sub Connector/Plug-in

SS5Y3-45FU-[Stations]D-C4, N3 / C6, N7-Q

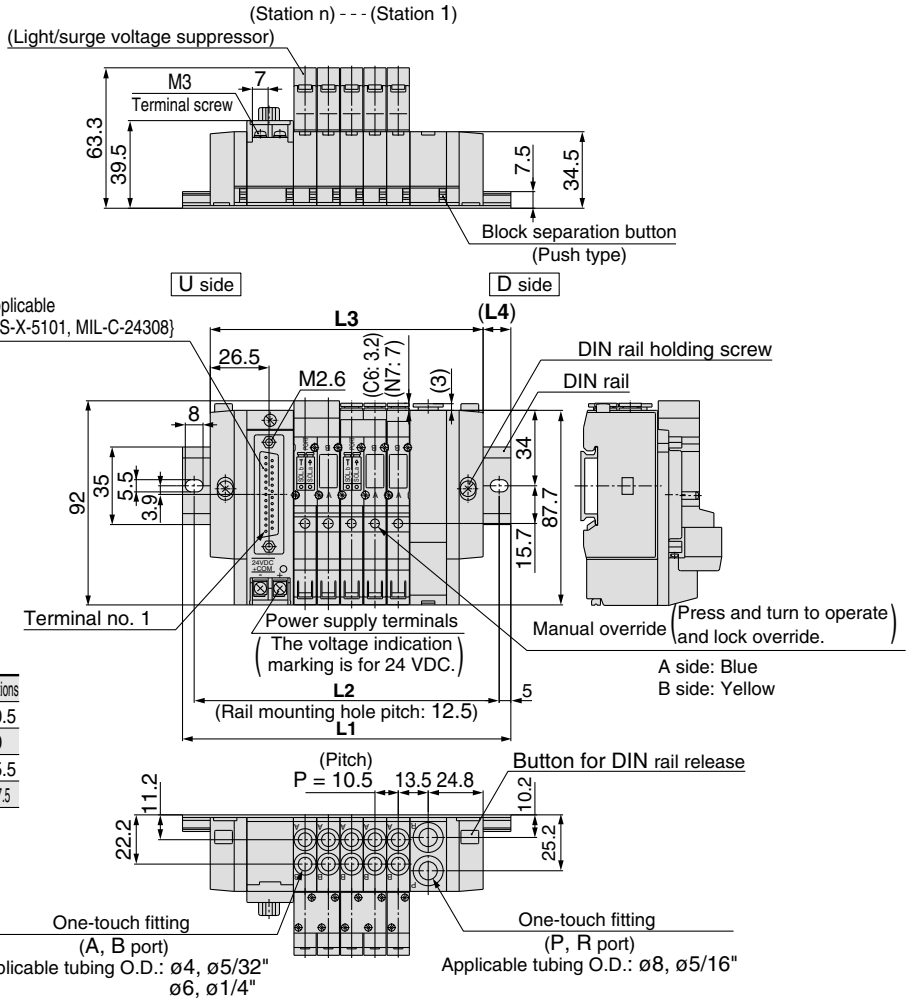

Note) The **L1** to **L4** dimensions of **SS5Y3-45FU-[Stations]U-C4, N3 / C6, N7-Q** are identical to those of SS5Y3-45FU-[Stations]D-C4, N3 / C6, N7-Q.

Stations n	2 stations	3	4	5	6	7	8	9	10 stations
L1	123	135.5	148	148	160.5	173	185.5	198	210.5
L2	112.5	125	137.5	137.5	150	162.5	175	187.5	200
L3	91.5	102	112.5	123	133.5	144	154.5	165	175.5
L4	15.5	16.5	17.5	12.5	13.5	14.5	15.5	16.5	17.5

SS5Y3-45FU-[Stations]B-C4, N3 / C6, N7-Q

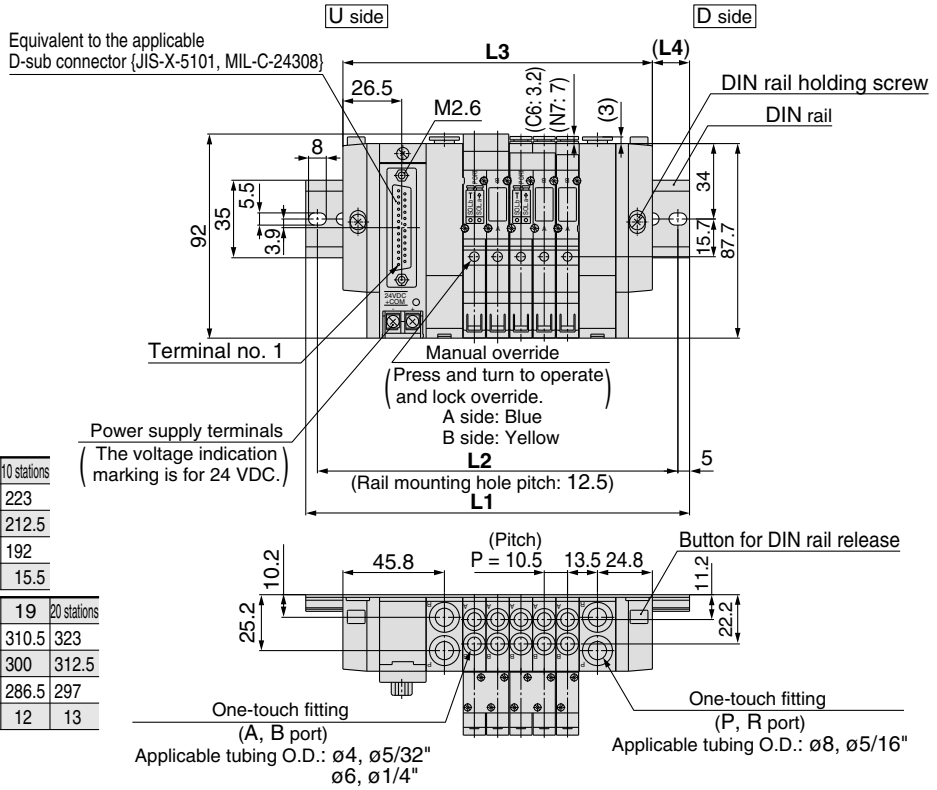

Stations n	2 stations	3	4	5	6	7	8	9	10 stations
L1	135.5	148	160.5	173	185.5	185.5	198	210.5	223
L2	125	137.5	150	162.5	175	175	187.5	200	212.5
L3	108	118.5	129	139.5	150	160.5	171	181.5	192
L4	13.5	14.5	15.5	16.5	17.5	12.5	13.5	14.5	15.5

Stations n	11 stations	12	13	14	15	16	17	18	19	20 stations
L1	235.5	248	248	260.5	273	285.5	298	310.5	310.5	323
L2	225	237.5	237.5	250	262.5	275	287.5	300	300	312.5
L3	202.5	213	223.5	234	244.5	255	265.5	276	286.5	297
L4	16.5	17.5	12	13	14	15	16	17	12	13

SY3000: D-sub Connector/Plug-in

SS5Y3-45FD-[Stations]U-C4, N3 / C6, N7-Q

Note) The **L1** to **L4** dimensions of **SS5Y3-45FD-[Stations]D-C4, N3 / C6, N7-Q** are identical to those of SS5Y3-45FD-[Stations]U-C4,N3 / C6,N7-Q.

Stations n	2 stations	3	4	5	6	7	8	9	10 stations
L1	123	135.5	148	148	160.5	173	185.5	198	210.5
L2	112.5	125	137.5	137.5	150	162.5	175	187.5	200
L3	91.5	102	112.5	123	133.5	144	154.5	165	175.5
L4	15.5	16.5	17.5	12.5	13.5	14.5	15.5	16.5	17.5

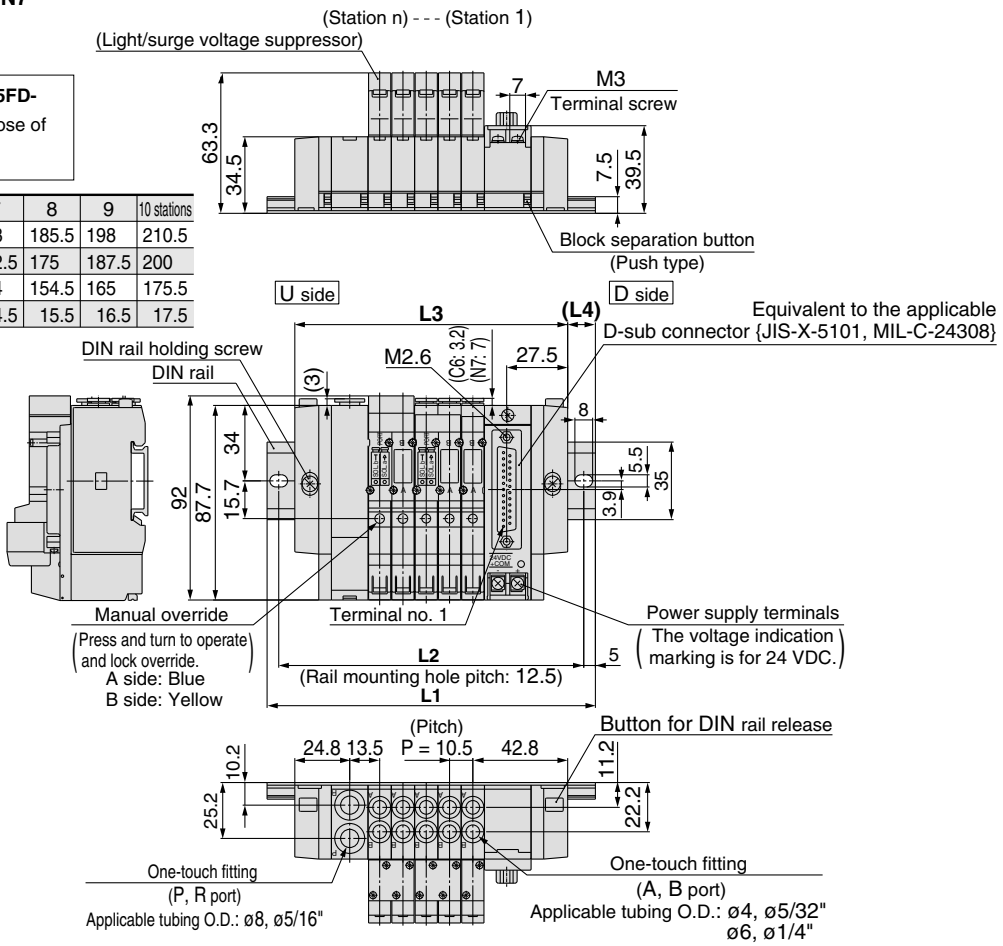

SS5Y3-45FD-[Stations]B-C4,N3 / C6,N7-Q

Stations n	2 stations	3	4	5	6	7	8	9	10 stations
L1	135.5	148	160.5	173	185.5	185.5	198	210.5	223
L2	125	137.5	150	162.5	175	175	187.5	200	212.5
L3	108	118.5	129	139.5	150	160.5	171	181.5	192
L4	13.5	14.5	15.5	16.5	17.5	12.5	13.5	14.5	15.5

Stations n	11 stations	12	13	14	15	16	17	18	19	20 stations
L1	235.5	248	248	260.5	273	285.5	298	310.5	310.5	323
L2	225	237.5	237.5	250	262.5	275	287.5	300	300	312.5
L3	202.5	213	223.5	234	244.5	255	265.5	276	286.5	297
L4	16.5	17.5	12	13	14	15	16	17	12	13

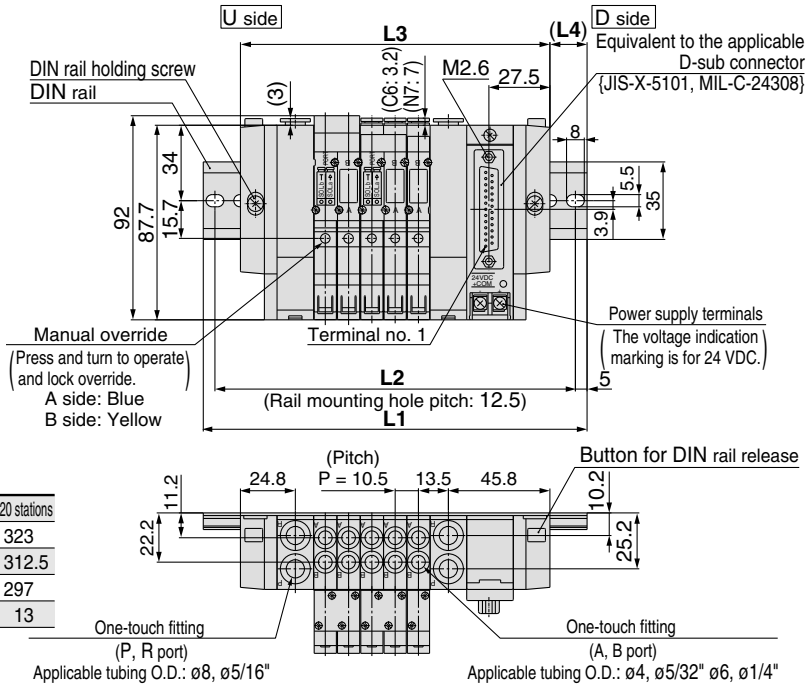

SY5000: D-sub Connector/Plug-in

SS5Y5-45FU-[Stations]D-C4, N3 C6, N7 C8, N9 -Q

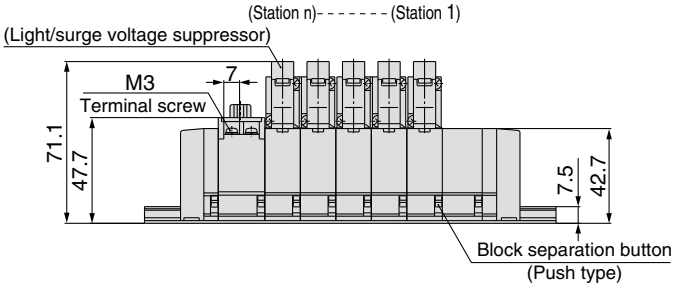

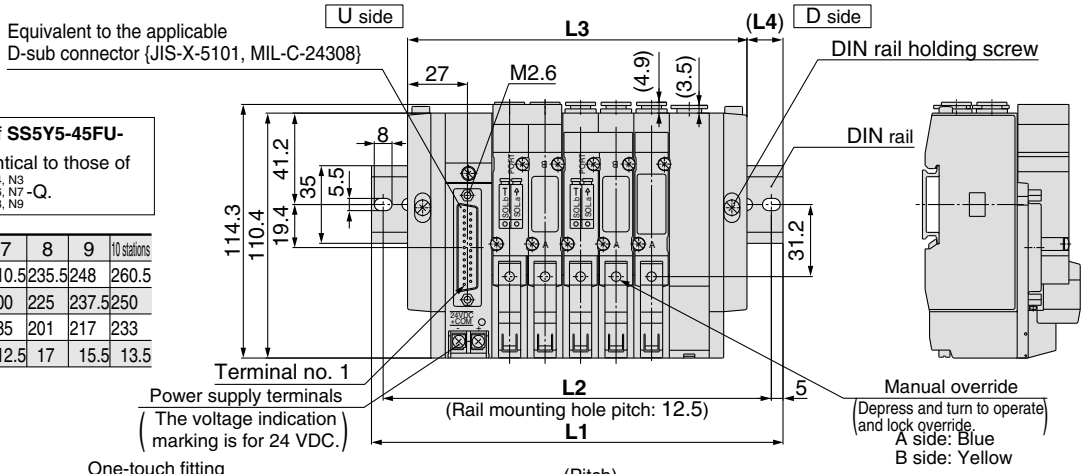

Note) **The L1** to **L4** dimensions of **SS5Y5-45FU-[Stations]U-C4, N3 C6, N7 C8, N9 -Q** are identical to those of SS5Y5-45FU-[Stations]D-C4, N3 C6, N7 C8, N9 -Q.

Stations n	2 stations	3	4	5	6	7	8	9	10 stations
L1	135.5	148	160.5	185.5	198	210.5	235.5	248	260.5
L2	125	137.5	150	175	187.5	200	225	237.5	250
L3	105	121	137	153	169	185	201	217	233
L4	15	13.5	11.5	16	14.5	12.5	17	15.5	13.5

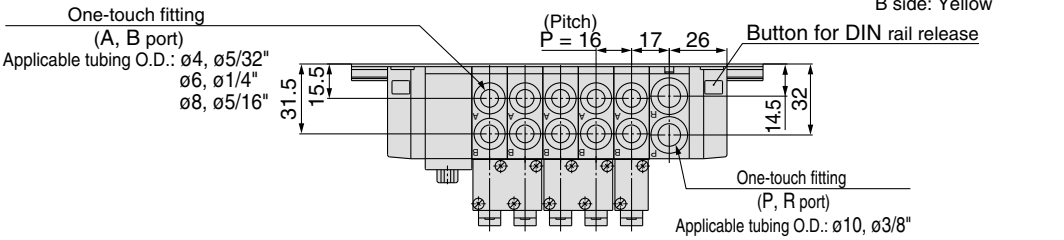

SS5Y5-45FU-[Stations]B-C4, N3 C6, N7 C8, N9 -Q

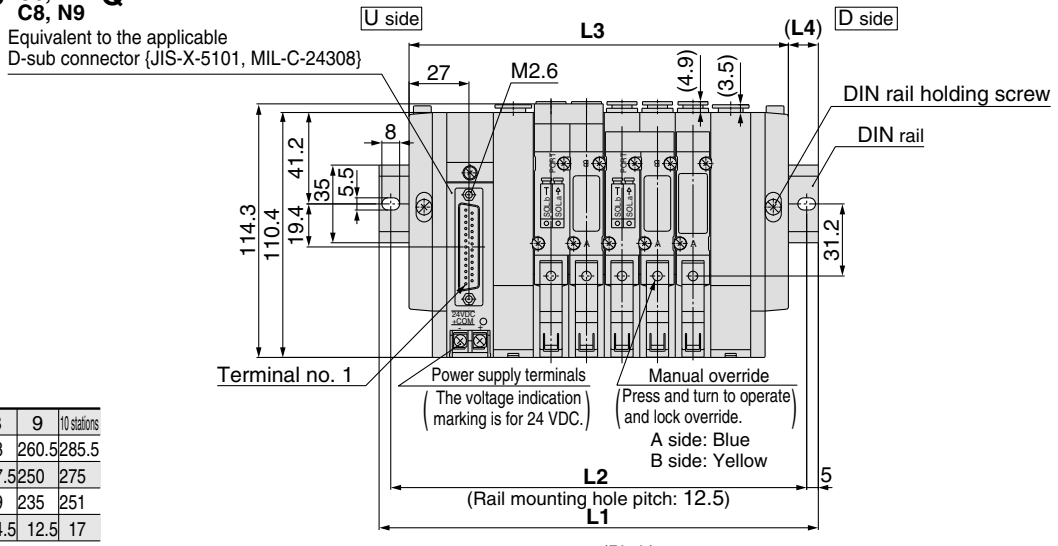

Stations n	2 stations	3	4	5	6	7	8	9	10 stations
L1	148	173	185.5	198	210.5	235.5	248	260.5	285.5
L2	137.5	162.5	175	187.5	200	225	237.5	250	275
L3	123	139	155	171	187	203	219	235	251
L4	12.5	17	15	13.5	11.5	16	14.5	12.5	17

Stations n	11 stations	12	13	14	15	16	17	18	19	20 stations
L1	298	310.5	323	348	360.5	373	398	410.5	423	435.5
L2	287.5	300	312.5	337.5	350	362.5	387.5	400	412.5	425
L3	267	283	299	315	331	347	363	379	395	411
L4	15.5	13.5	12	16.5	14.5	13	17.5	15.5	14	12

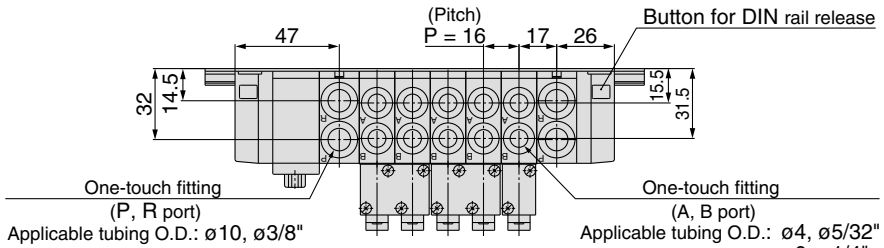

SY5000: D-sub Connector/Plug-in

SS5Y5-45FD-[Stations]U-C4, N3 / C6, N7 / C8, N9-Q

Note) **The L1** to **L4** dimensions of **SS5Y5-45FD-[Stations]D-C4, N3 / C6, N7 / C8, N9-Q** are identical to those of SS5Y5-45FD-[Stations]U-C4, N3 / C6, N7 / C8, N9-Q.

Stations n	2 stations	3	4	5	6	7	8	9	10 stations
L1	135.5	1 48	160.5	185.5	198	210.5	235.5	248	260.5
L2	125	137.5	150	175	187.5	200	225	237.5	250
L3	105	121	137	153	169	185	201	217	233
L4	15	13.5	11.5	16	14.5	12.5	17	15.5	13.5

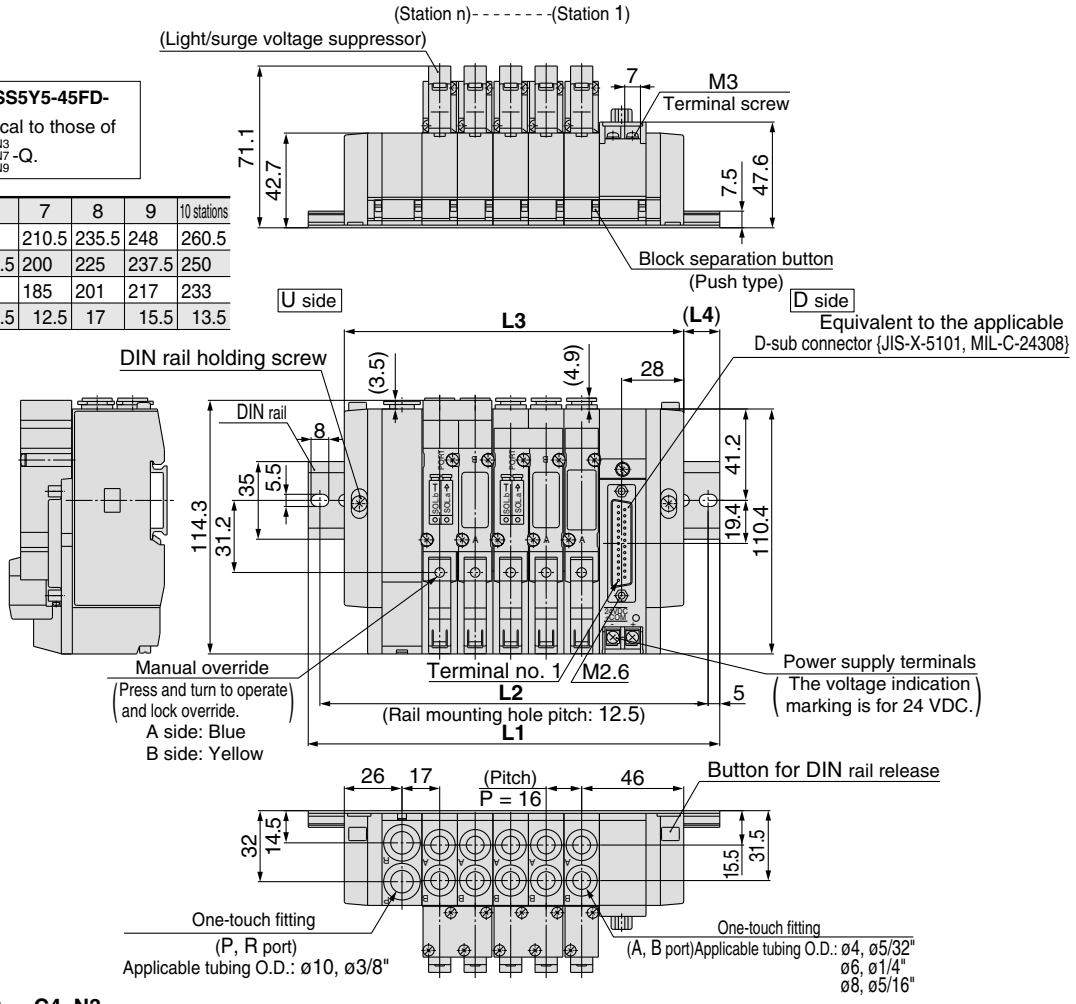

SS5Y5-45FD-[Stations]B-C4, N3 / C6, N7 / C8, N9-Q

Stations n	2 stations	3	4	5	6	7	8	9	10 stations
L1	148	173	185.5	198	210.5	235.5	248	260.5	285.5
L2	137.5	162.5	175	187.5	200	225	237.5	250	275
L3	123	139	155	171	187	203	219	235	251
L4	12.5	17	15	13.5	11.5	16	14.5	12.5	17

Stations n	11 stations	12	13	14	15	16	17	18	19	20 stations
L1	298	310.5	323	348	360.5	373	398	410.5	423	435.5
L2	287.5	300	312.5	337.5	350	362.5	387.5	400	412.5	425
L3	267	283	299	315	331	347	363	379	395	411
L4	15.5	13.5	12	16.5	14.5	13	17.5	15.5	14	12

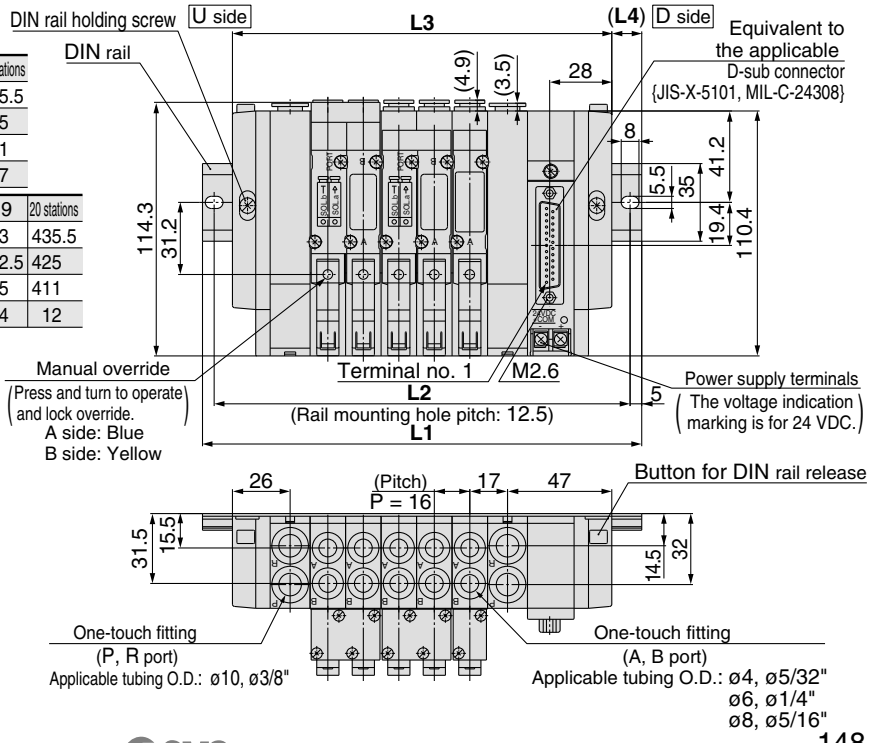

SY3000: Flat Ribbon Cable/Plug-in

SS5Y3-45PU-[Stations] D-$^{C4, N3}_{C6, N7}$-Q (26 pins)

Note) **The L1** to **L4** dimensions of **SS5Y3-45P□U-[Stations]U-$^{C4, N3}_{C6, N7}$-Q** are identical to those of SS5Y3-45PIU-[Stations]D-$^{C4, N3}_{C6, N7}$-Q.

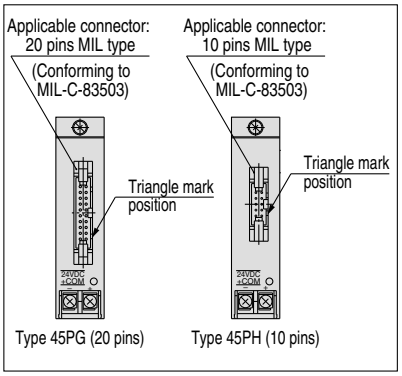

Stations n	2 stations	3	4	5	6	7	8	9	10 stations
L1	123	135.5	148	148	160.5	173	185.5	198	210.5
L2	112.5	125	137.5	137.5	150	162.5	175	187.5	200
L3	91.5	102	112.5	123	133.5	144	154.5	165	175.5
L4	15.5	16.5	17.5	12.5	13.5	14.5	15.5	16.5	17.5

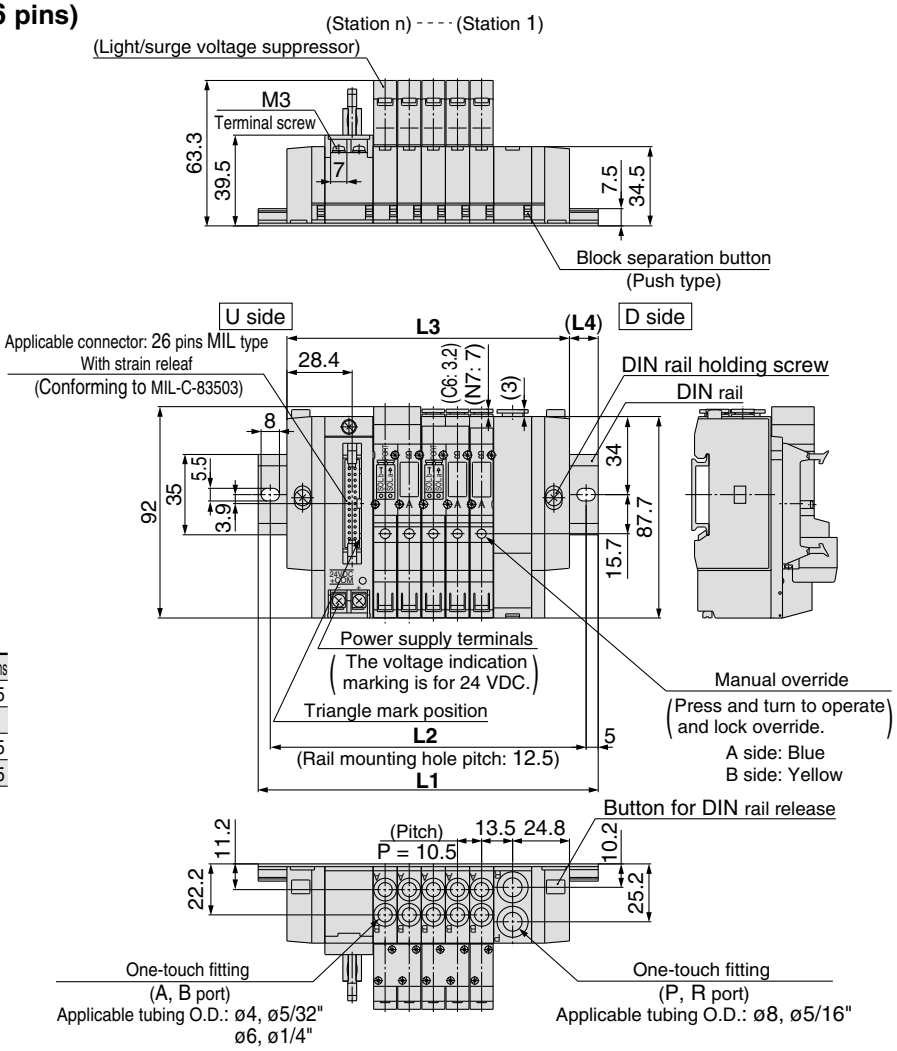

SS5Y3-45PU-[Stations] B-$^{C4, N3}_{C6, N7}$-Q (26 pins)

Stations n	2 stations	3	4	5	6	7	8	9	10 stations
L1	135.5	148	160.5	173	185.5	185.5	198	210.5	223
L2	125	137.5	150	162.5	175	175	187.5	200	212.5
L3	108	118.5	129	139.5	150	160.5	171	181.5	192
L4	13.5	14.5	15.5	16.5	17.5	12.5	13.5	14.5	15.5

Stations n	11 stations	12	13	14	15	16	17	18	19	20 stations
L1	235.5	248	248	260.5	273	285.5	298	310.5	310.5	323
L2	225	237.5	237.5	250	262.5	275	287.5	300	300	312.5
L3	202.5	213	223.5	234	244.5	255	265.5	276	286.5	297
L4	16.5	17.5	12	13	14	15	16	17	12	13

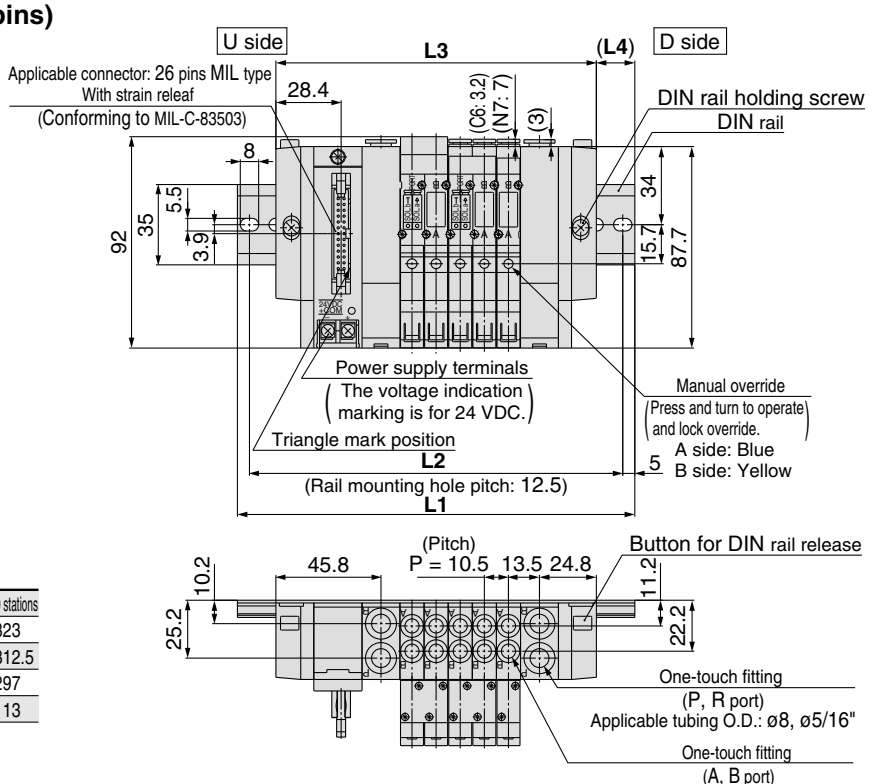

SY3000: Flat Ribbon Cable/Plug-in

SS5Y3-45PD-[Stations]U-C4,N3/C6,N7-Q (26 pins)

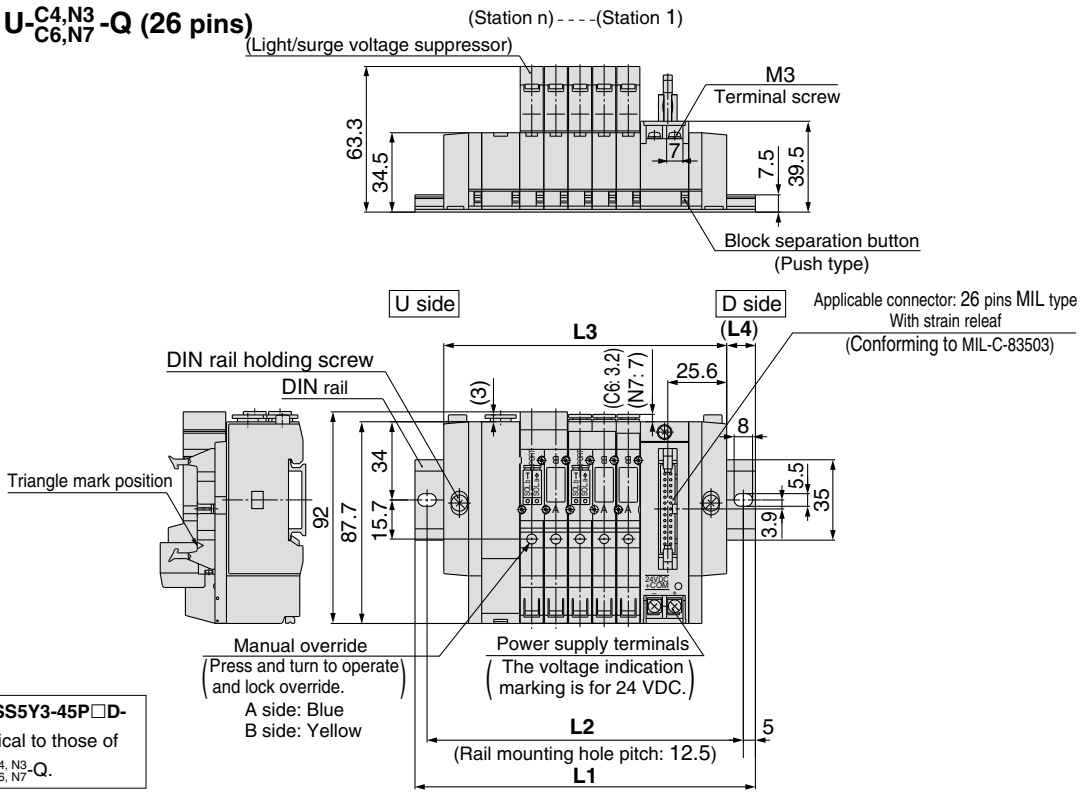

Note) The **L1** to **L4** dimensions of **SS5Y3-45P□D-[Stations]D-C4, N3/C6, N7-Q** are identical to those of SS5Y3-45P□D-[Stations]U-C4, N3/C6, N7-Q.

Stations n	2 stations	3	4	5	6	7	8	9	10 stations
L1	123	135.5	148	148	160.5	173	185.5	198	210.5
L2	112.5	125	137.5	137.5	150	162.5	175	187.5	200
L3	91.5	102	112.5	123	133.5	144	154.5	165	175.5
L4	15.5	16.5	17.5	12.5	13.5	14.5	15.5	16.5	17.5

SS5Y3-45PD-[Stations]B-C4,N3/C6,N7-Q (26 pins)

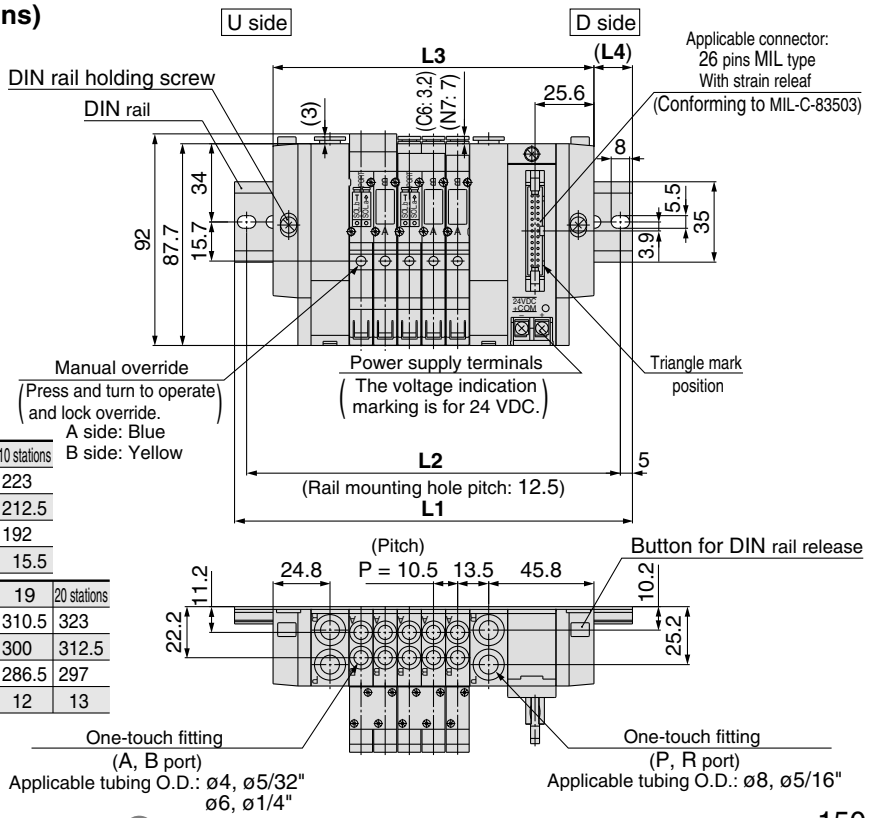

Stations n	2 stations	3	4	5	6	7	8	9	10 stations
L1	135.5	148	160.5	173	185.5	185.5	198	210.5	223
L2	125	137.5	150	162.5	175	175	187.5	200	212.5
L3	108	118.5	129	139.5	150	160.5	171	181.5	192
L4	13.5	14.5	15.5	16.5	17.5	12.5	13.5	14.5	15.5

Stations n	11 stations	12	13	14	15	16	17	18	19	20 stations
L1	235.5	248	248	260.5	273	285.5	298	310.5	310.5	323
L2	225	237.5	237.5	250	262.5	275	287.5	300	300	312.5
L3	202.5	213	223.5	234	244.5	255	265.5	276	286.5	297
L4	16.5	17.5	12	13	14	15	16	17	12	13

SY5000: Flat Ribbon Cable/Plug-in

SS5Y5-45PU-[Stations]D-C4, N3 C6, N7 -Q (26 pins)

Note) **The L1** to **L4** dimensions of **SS5Y5-45P□U-[Stations]U-C4, N3 C5, N7 C8, N9 -Q** are identical to those of SS5Y5-45P□U-[Stations]D-C4, N3 C6, N7 C8, N9 -Q.

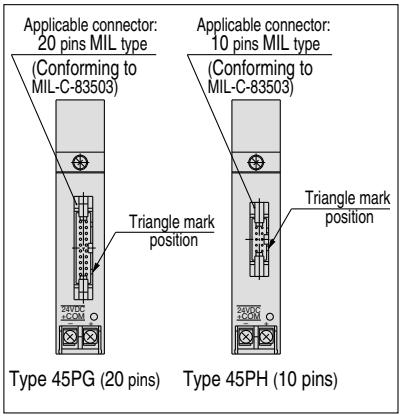

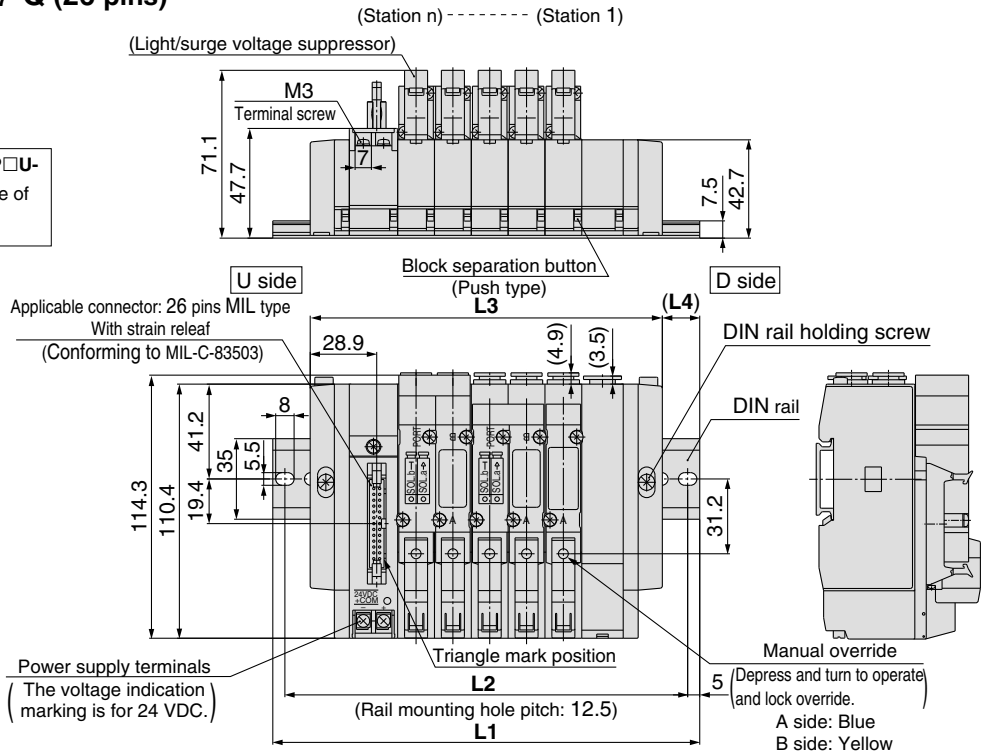

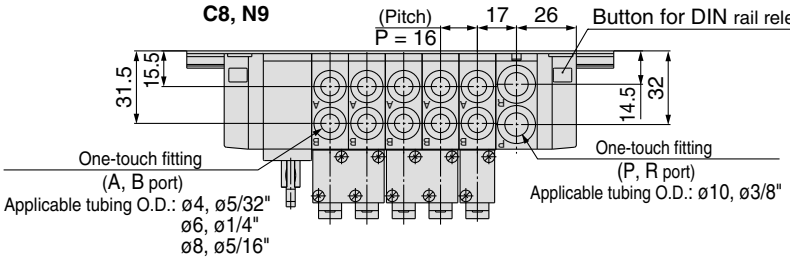

Stations n	2 stations	3	4	5	6	7	8	9	10 stations
L1	135.5	148	160.5	185.5	198	210.5	235.5	248	260.5
L2	125	137.5	150	175	187.5	200	225	237.5	250
L3	105	121	137	153	169	185	201	217	233
L4	15	13.5	11.5	16	14.5	12.5	17	15.5	13.5

SS5Y5-45PU-[Stations]B-C4, N3 C6, N7 C8, N9 -Q (26 pins)

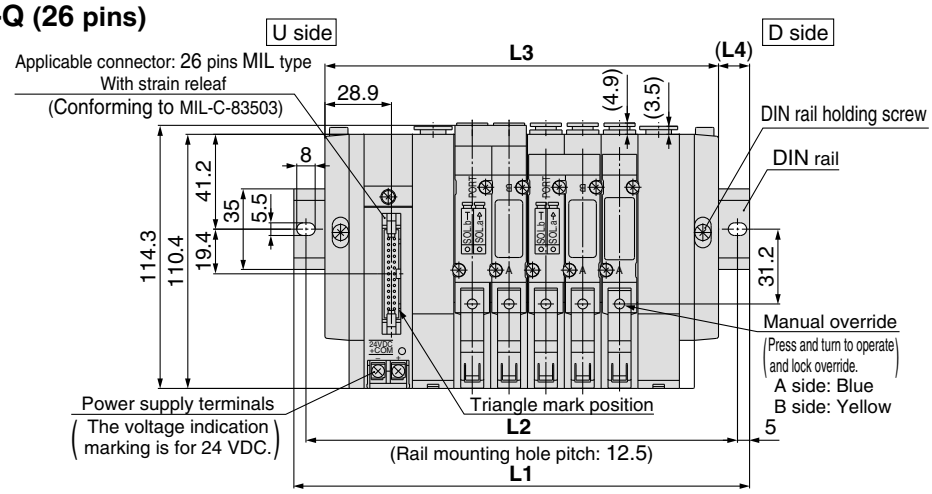

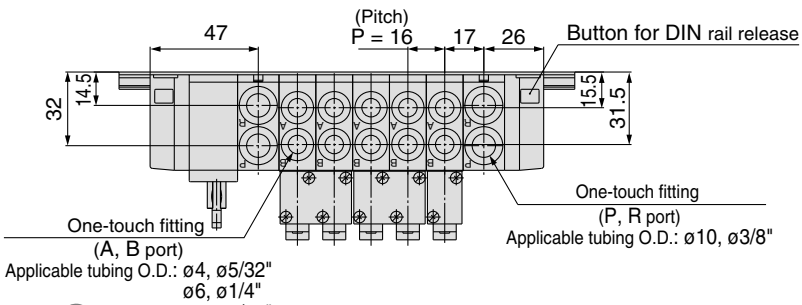

Stations n	2 stations	3	4	5	6	7	8	9	10 stations
L1	148	173	185.5	198	210.5	235.5	248	260.5	285.5
L2	137.5	162.5	175	187.5	200	225	237.5	250	275
L3	123	139	155	171	187	203	219	235	251
L4	12.5	17	15	13.5	11.5	16	14.5	12.5	17

Stations n	11 stations	12	13	14	15	16	17	18	19	20 stations
L1	298	310.5	323	348	360.5	373	398	410.5	423	435.5
L2	287.5	300	312.5	337.5	350	362.5	387.5	400	412.5	425
L3	267	283	299	315	331	347	363	379	395	411
L4	15.5	13.5	12	16.5	14.5	13	17.5	15.5	14	12

SY5000: Flat Ribbon Cable/Plug-in

SS5Y5-45PD-[Stations]U-C4, N3 C6, N7 C8, N9-Q (26 pins)

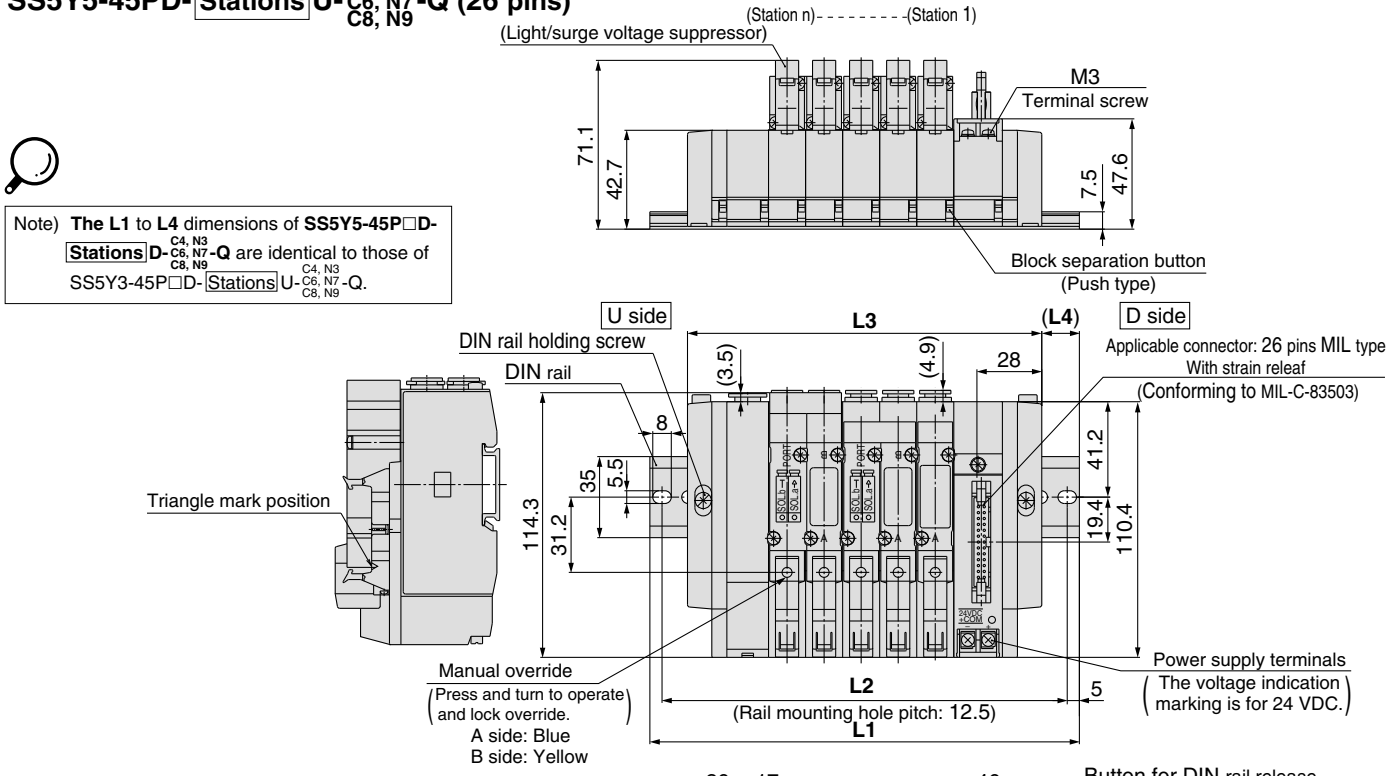

Stations n	2 stations	3	4	5	6	7	8	9	10 stations
L1	135.5	148	160.5	185.5	198	210.5	235.5	248	260.5
L2	125	137.5	150	175	187.5	200	225	237.5	250
L3	105	121	137	153	169	185	201	217	233
L4	15	13.5	11.5	16	14.5	12.5	17	15.5	13.5

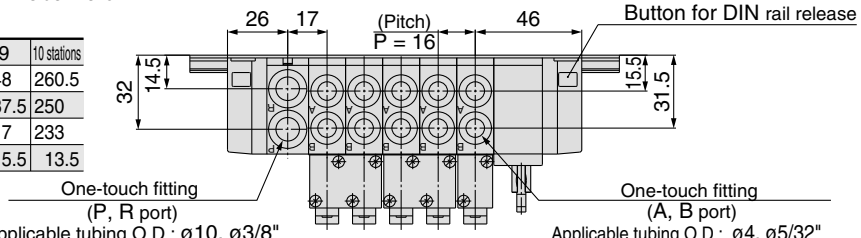

Note) **The L1** to **L4** dimensions of **SS5Y5-45P□D-[Stations]D-C4, N3 C6, N7 C8, N9-Q** are identical to those of SS5Y3-45P□D-[Stations]U-C4, N3 C6, N7 C8, N9-Q.

SS5Y5-45PD-[Stations]B-C4, N3 C6, N7 C8, N9-Q (26 pins)

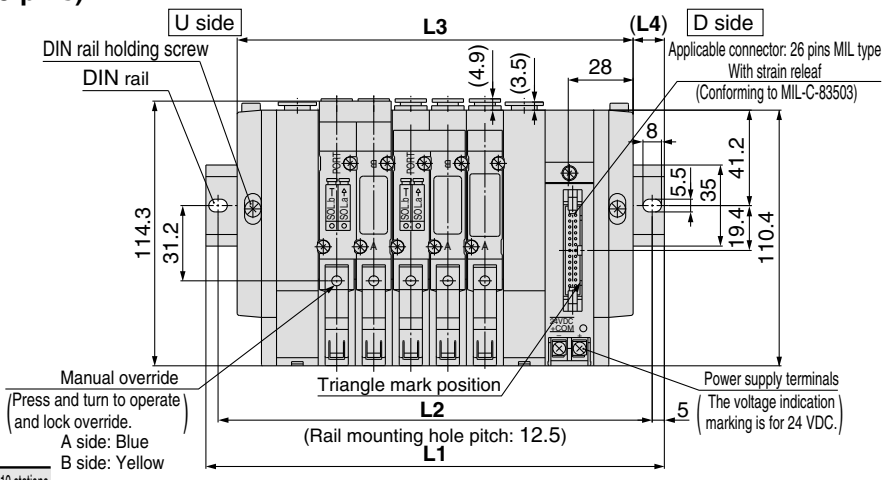

Stations n	2 stations	3	4	5	6	7	8	9	10 stations
L1	148	173	185.5	198	210.5	235.5	248	260.5	285.5
L2	137.5	162.5	175	187.5	200	225	237.5	250	275
L3	123	139	155	171	187	203	219	235	251
L4	12.5	17	15	13.5	11.5	16	14.5	12.5	17

Stations n	11 stations	12	13	14	15	16	17	18	19	20 stations
L1	298	310.5	323	348	360.5	373	398	410.5	423	435.5
L2	287.5	300	312.5	337.5	350	362.5	387.5	400	412.5	425
L3	267	283	299	315	331	347	363	379	395	411
L4	15.5	13.5	12	16.5	14.5	13	17.5	15.5	14	12

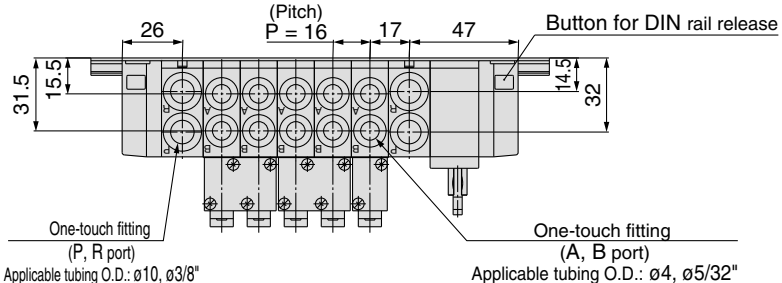

SY3000: 9 Pins Terminal Block/Plug-in

SS5Y3-45TU-[Stations] D-$^{C4, N3}_{C6, N7}$-Q (9 pins)

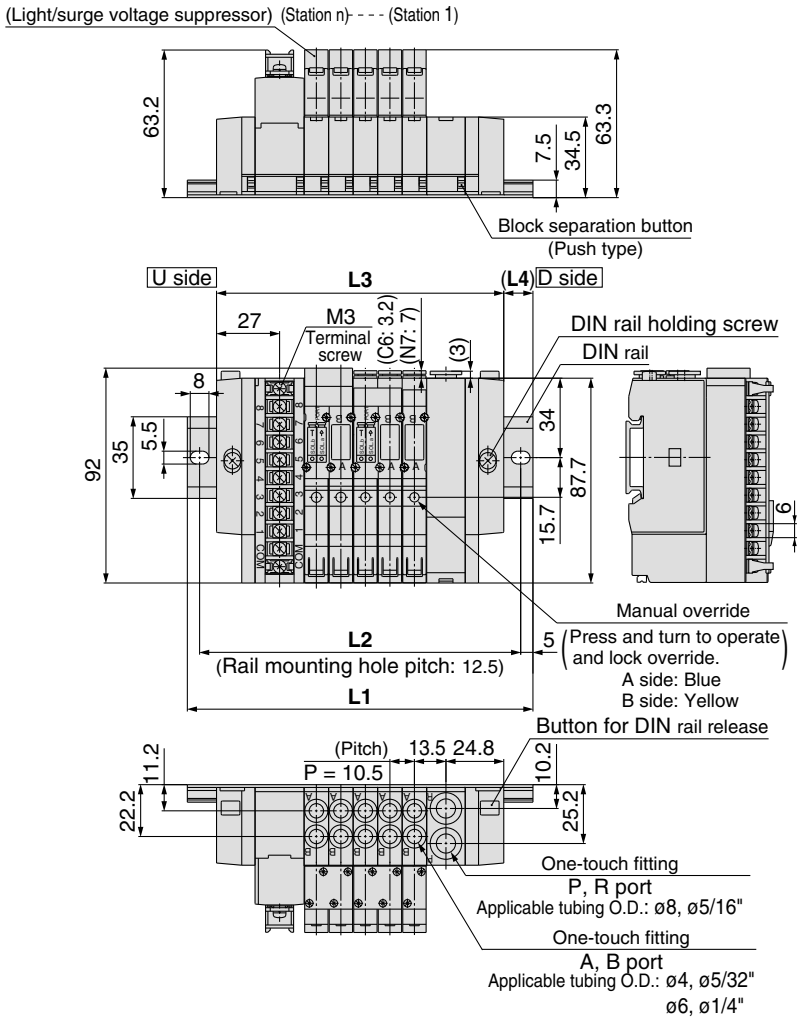

Note) The **L1** to **L4** dimensions of **SS5Y3-45TU-[Stations]U-$^{C4, N3}_{C6, N7}$-Q**, **SS5Y3-45TD-[Stations]U-$^{C4, N3}_{C6, N7}$-Q**, **SS5Y3-45TD-[Stations]D-$^{C4, N3}_{C6, N7}$-Q** are identical those of SS5Y3-45TU-[Stations]D-$^{C4, N3}_{C6, N7}$-Q.

Stations n	2 stations	3	4	5	6	7	8 stations
L1	123	135.5	148	148	160.5	173	185.5
L2	112.5	125	137.5	137.5	150	162.5	175
L3	91.5	102	112.5	123	133.5	144	154.5
L4	15.5	16.5	17.5	12.5	13.5	14.5	15.5

SS5Y3-45TU-[Stations] B-$^{C4, N3}_{C6, N7}$-Q (9 pins)

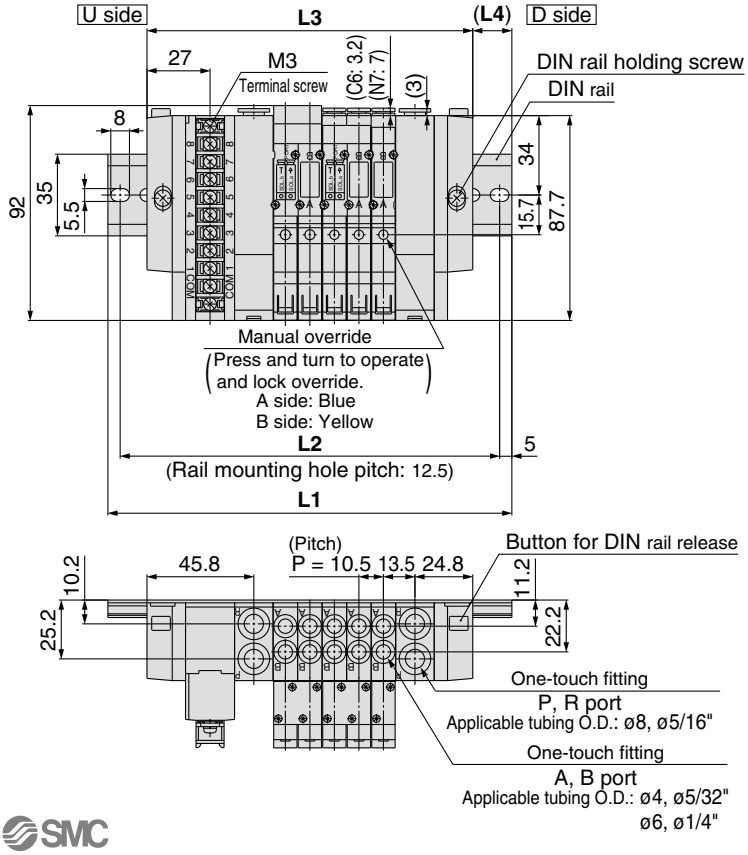

Note) The **L1** to **L4** dimensions of **SS5Y3-45TD-[Stations]B-$^{C4, N3}_{C6, N7}$-Q** are identical to those of SS5Y3-45TU-[Stations]B-$^{C4, N3}_{C6, N7}$-Q.

Stations n	2 stations	3	4	5	6	7	8 stations
L1	135.5	148	160.5	173	185.5	185.5	198
L2	125	137.5	150	162.5	175	175	187.5
L3	108	118.5	129	139.5	150	160.5	171
L4	13.5	14.5	15.5	16.5	17.5	12.5	13.5

SY5000: 9 Pins Terminal Block/Plug-in

SS5Y5-45TU-[Stations]D-C4, N3 C6, N7 C8, N9-Q (9 pins)

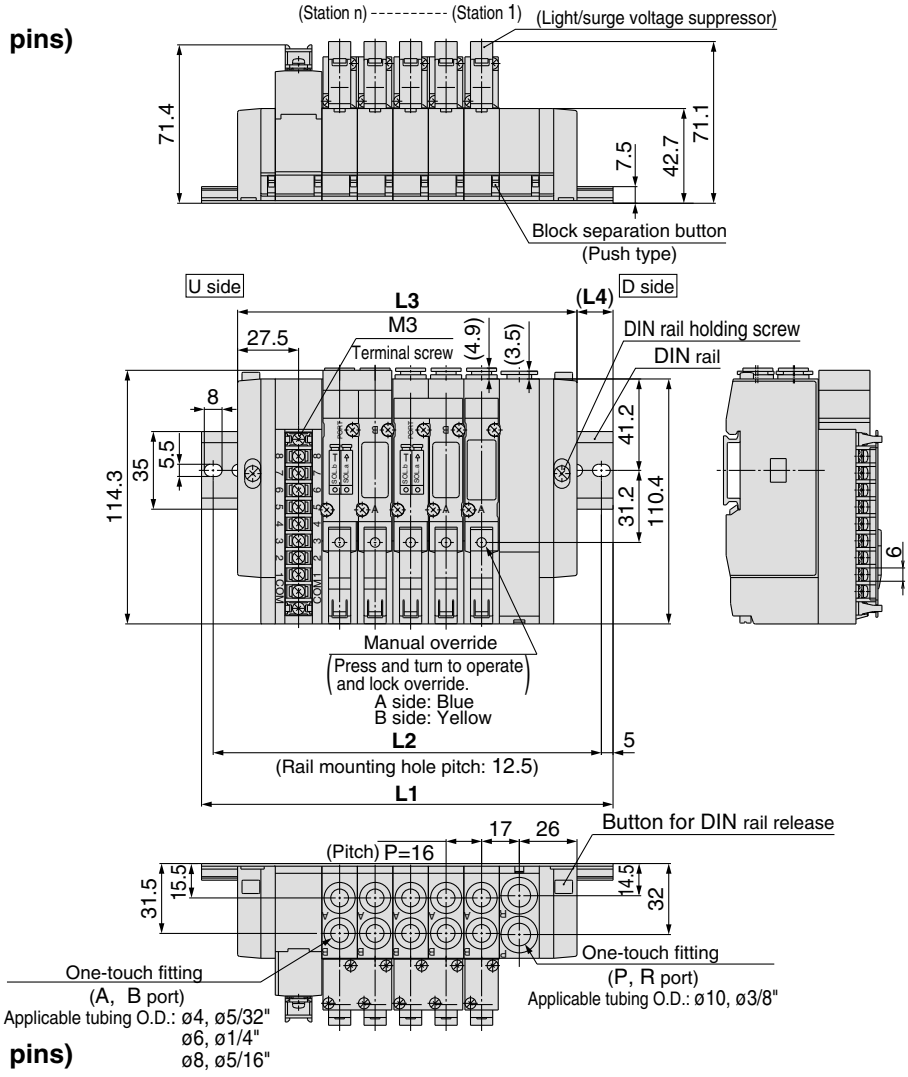

Note) The **L1** to **L4** dimensions of **SS5Y5-45TU-[Stations]U-C4, N3 C6, N7 C8, N9-Q**, **SS5Y5-45TD-[Stations]U-C4, N3 C6, N7 C8, N9-Q**, **SS5Y5-45TD-[Stations]D-C4, N3 C6, N7 C8, N9-Q** are identical those of SS5Y5-45TU-[Stations]D-C4, N3 C6, N7 C8, N9-Q.

Stations n	2 stations	3	4	5	6	7	8 stations
L1	135.5	148	160.5	185.5	198	210.5	235.5
L2	125	137.5	150	175	187.5	200	225
L3	105	121	137	153	169	185	201
L4	15	13.5	11.5	16	14.5	12.5	17

SS5Y5-45TU-[Stations]B-C4, N3 C6, N7 C8, N9-Q (9 pins)

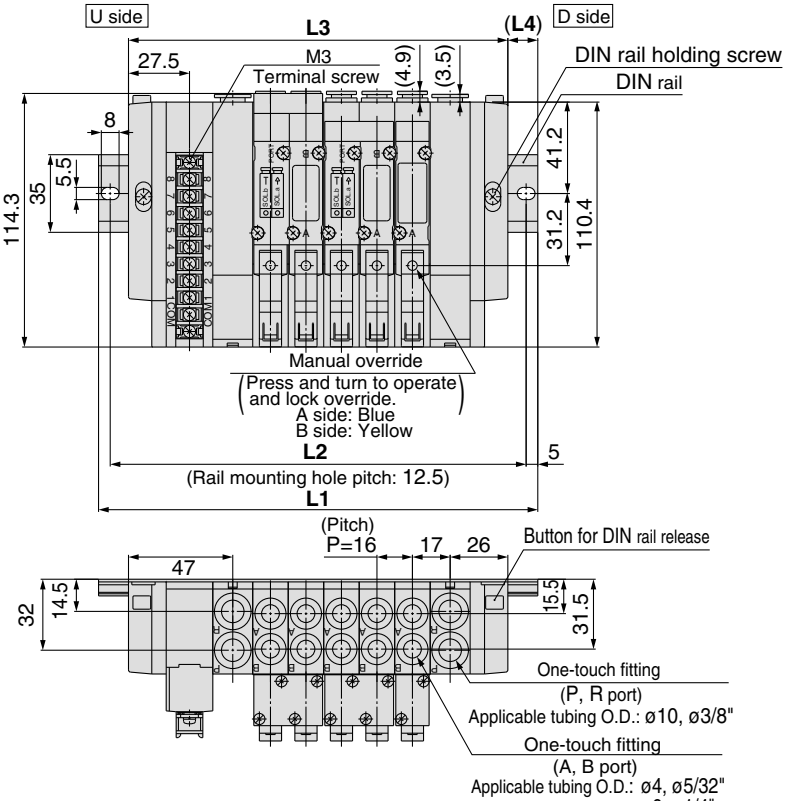

Note) **The L1** to **L4** dimensions of **SS5Y5-45TD-[Stations]B-C4, N3 C6, N7 C8, N9-Q** are identical to those of SS5Y5-45TU-[Stations]B-C4, N3 C6, N7 C8, N9-Q.

Stations n	2 stations	3	4	5	6	7	8 stations
L1	148	173	185.5	198	210.5	235.5	248
L2	137.5	162.5	175	187.5	200	225	237.5
L3	123	139	155	171	187	203	219
L4	12.5	17	15	13.5	11.5	16	14.5

SY3000: 18 Pins Terminal Block/Plug-in

SS5Y3-45T1U-[Stations]D-$^{C4, N3}_{C6, N7}$-Q (18 pins)

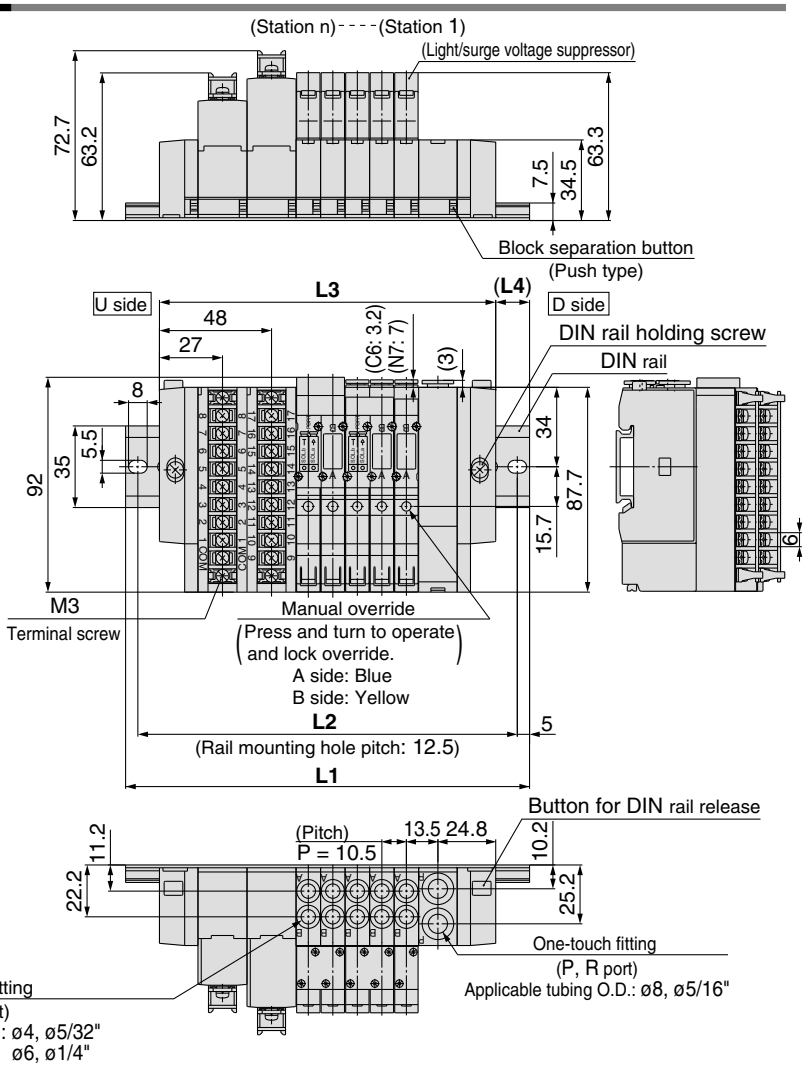

Note) The **L1** to **L4** dimensions of **SS5Y3-45T1U-[Stations]U-$^{C4, N3}_{C6, N7}$-Q** are identical to those of SS5Y3-45T1U-[Stations]D-$^{C4, N3}_{C6, N7}$-Q.

Stations n	2 stations	3	4	5	6	7	8	9	10 stations
L1	148	148	160.5	173	185.5	198	210.5	210.5	223
L2	137.5	137.5	150	162.5	175	187.5	200	200	212.5
L3	112.5	123	133.5	144	154.5	165	175.5	186	196.5
L4	17.5	12.5	13.5	14.5	15.5	16.5	17.5	12	13

SS5Y3-45T1U-[Stations]B-$^{C4, N3}_{C6, N7}$-Q (18 pins)

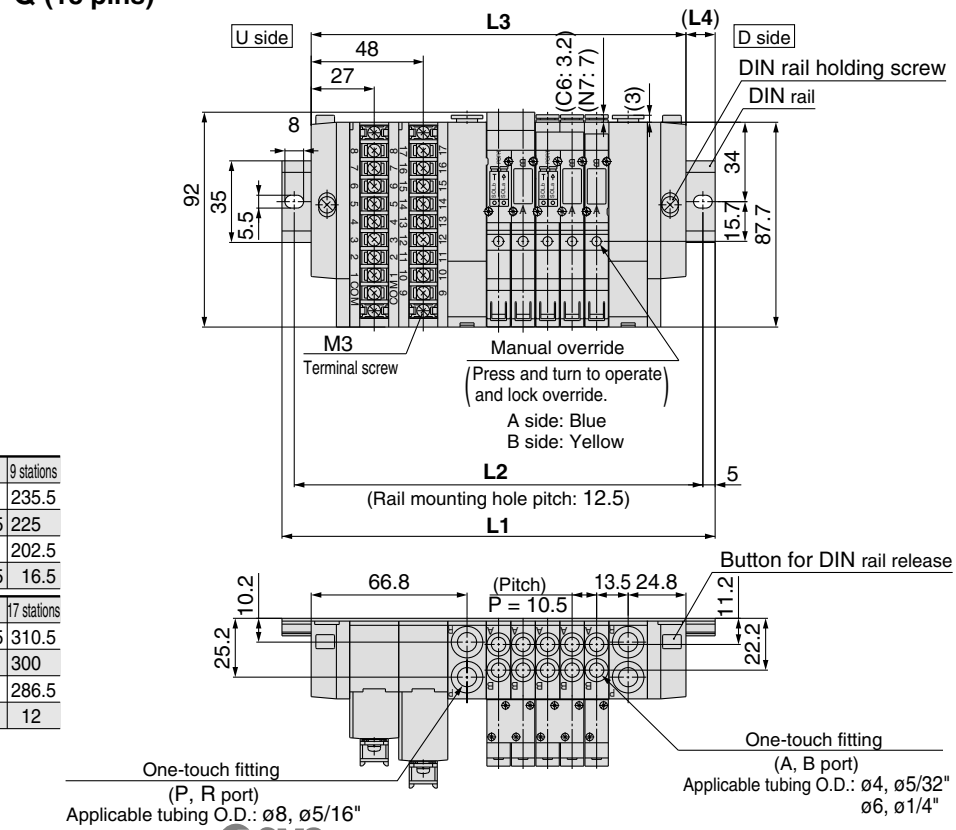

Stations n	2 stations	3	4	5	6	7	8	9 stations
L1	160.5	173	185.5	185.5	198	210.5	223	235.5
L2	150	162.5	175	175	187.5	200	212.5	225
L3	129	139.5	150	160.5	171	181.5	192	202.5
L4	15.5	16.5	17.5	12.5	13.5	14.5	15.5	16.5

Stations n	10 stations	11	12	13	14	15	16	17 stations
L1	248	248	260.5	273	285.5	298	310.5	310.5
L2	237.5	237.5	250	262.5	275	287.5	300	300
L3	213	223.5	234	244.5	255	265.5	276	286.5
L4	17.5	12	13	14	15	16	17	12

SY3000: 9 Pins Terminal Block/Plug-in

SS5Y3-45T1D-[Stations]U-C4, N3 / C6, N7-Q (18 pins)

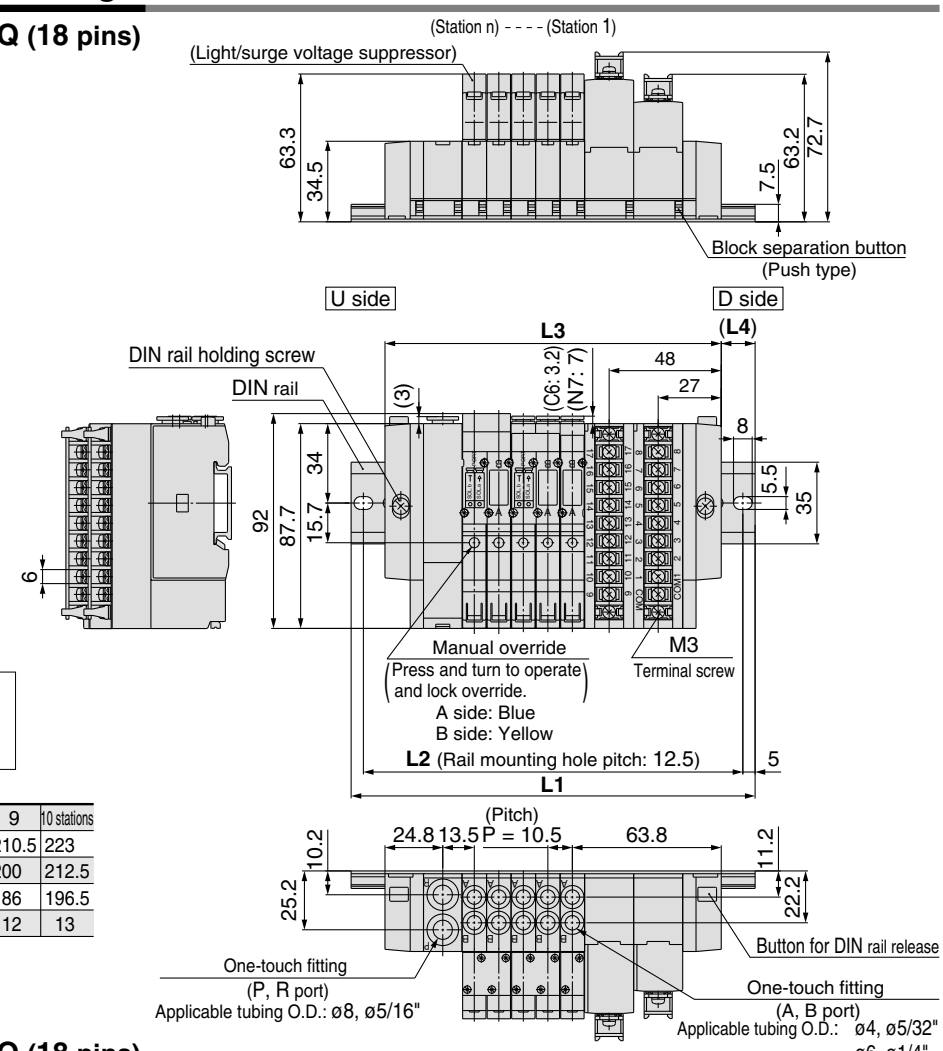

Note) The **L1** to **L4** dimensions of **SS5Y3-45T1D-[Stations]D-C4, N3 / C6, N7-Q** are identical to those of SS5Y3-45T1D-[Stations]U-C4, N3 / C6, N7-Q.

Stations n	2 stations	3	4	5	6	7	8	9	10 stations
L1	148	148	160.5	173	185.5	198	210.5	210.5	223
L2	137.5	137.5	150	162.5	175	187.5	200	200	212.5
L3	112.5	123	133.5	144	154.5	165	175.5	186	196.5
L4	17.5	12.5	13.5	14.5	15.5	16.5	17.5	12	13

SS5Y3-45T1D-[Stations]B-C4, N3 / C6, N7-Q (18 pins)

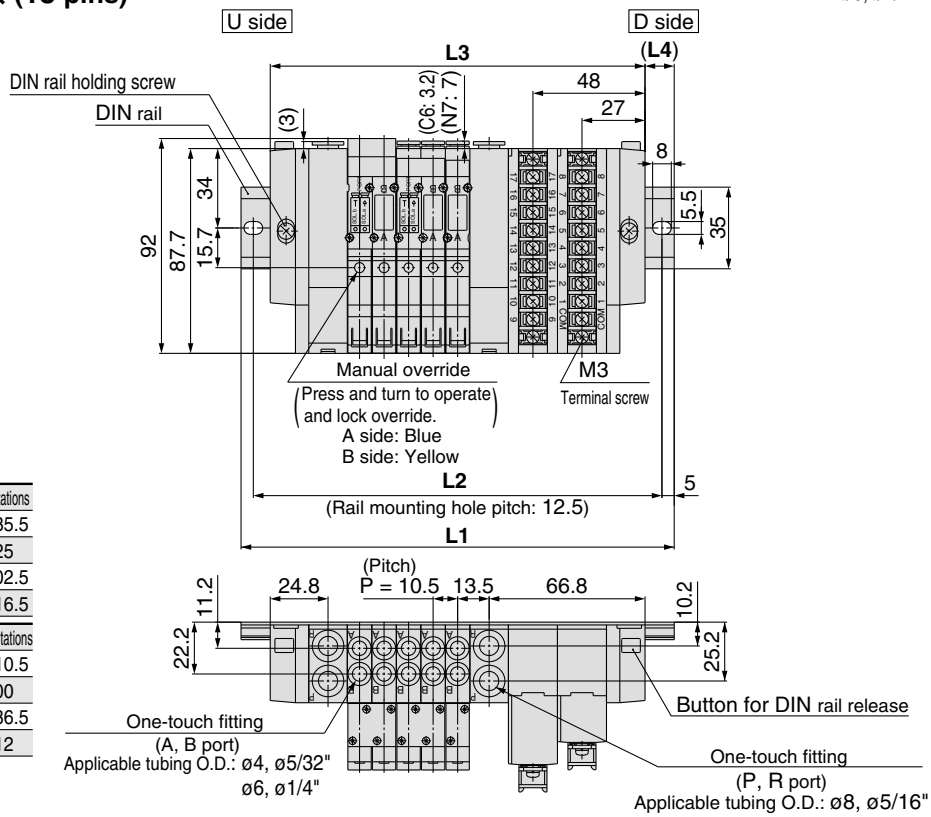

Stations n	2 stations	3	4	5	6	7	8	9 stations
L1	160.5	173	185.5	185.5	198	210.5	223	235.5
L2	150	162.5	175	175	187.5	200	212.5	225
L3	129	139.5	150	160.5	171	181.5	192	202.5
L4	15.5	16.5	17.5	12.5	13.5	14.5	15.5	16.5

Stations n	10 stations	11	12	13	14	15	16	17 stations
L1	248	248	260.5	273	285.5	298	310.5	310.5
L2	237.5	237.5	250	262.5	275	287.5	300	300
L3	213	223.5	234	244.5	255	265.5	276	286.5
L4	17.5	12	13	14	15	16	17	12

SY5000: 18 Pins Terminal Block/Plug-in

SS5Y5-45T1U-[Stations] D-C4, N3 C6, N7 C8, N9 -Q (18 pins)

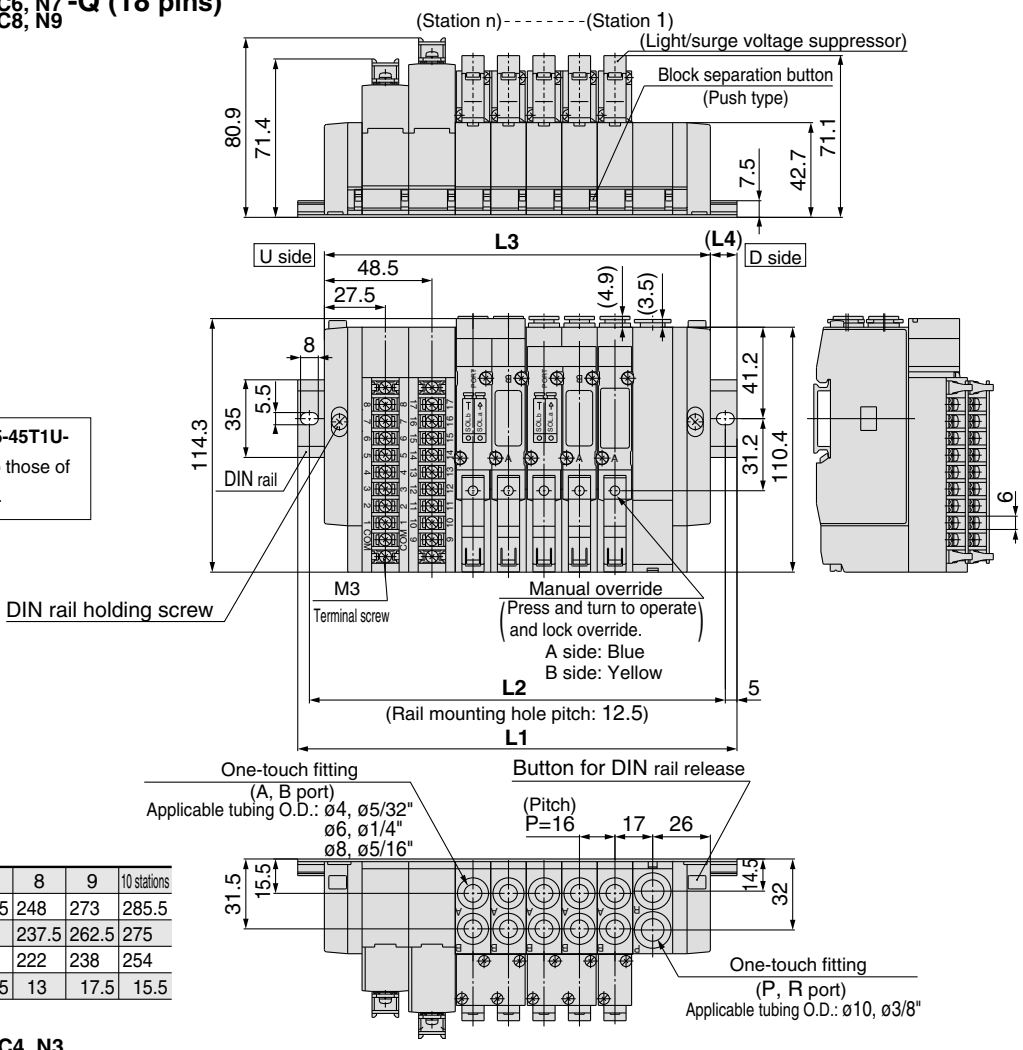

Note) The **L1** to **L4** dimensions of **SS5Y5-45T1U-[Stations]U-C4, N3 C6, N7 C8, N9 -Q** are identical to those of SS5Y5-45T1U-[Stations]D-C4, N3 C6, N7 C8, N9 -Q.

Stations n	2 stations	3	4	5	6	7	8	9	10 stations
L1	160.5	173	185.5	198	223	235.5	248	273	285.5
L2	150	162.5	175	187.5	212.5	225	237.5	262.5	275
L3	126	142	158	174	190	206	222	238	254
L4	17	15.5	13.5	12	16.5	14.5	13	17.5	15.5

SS5Y5-45T1U-[Stations] B-C4, N3 C6, N7 C8, N9 -Q (18 pins)

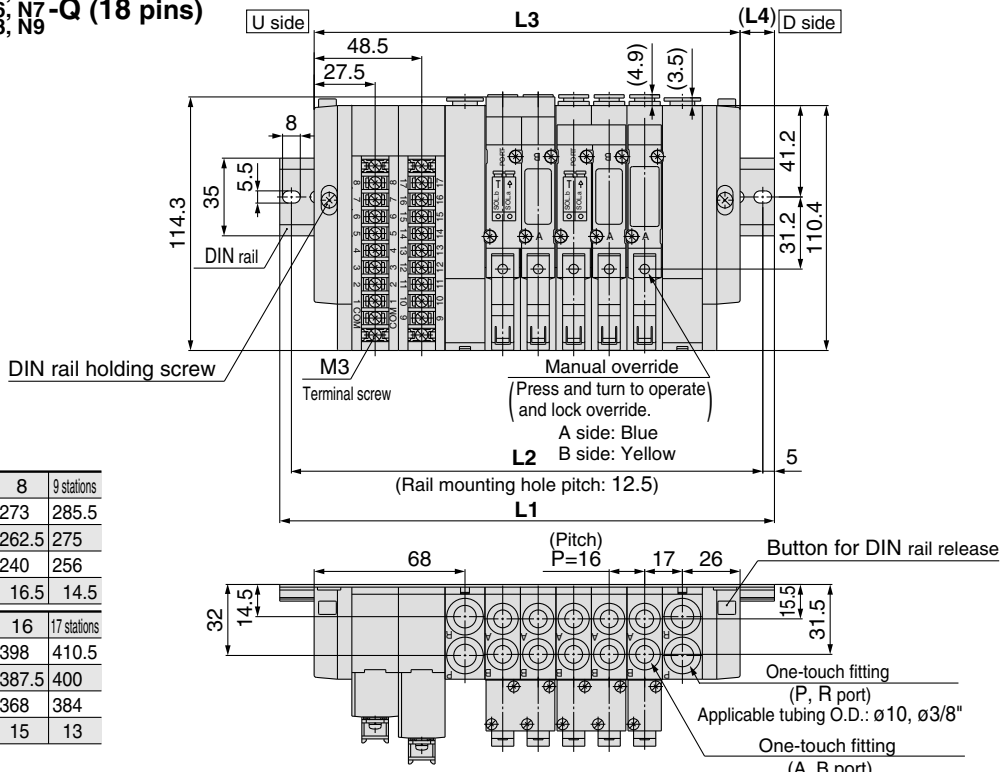

Stations n	2 stations	3	4	5	6	7	8	9 stations
L1	173	185.5	210.5	223	235.5	248	273	285.5
L2	162.5	175	200	212.5	225	237.5	262.5	275
L3	144	160	176	192	208	224	240	256
L4	14.5	12.5	17	15.5	13.5	12	16.5	14.5

Stations n	10 stations	11	12	13	14	15	16	17 stations
L1	298	323	335.5	348	360.5	385.5	398	410.5
L2	287.5	312.5	325	337.5	350	375	387.5	400
L3	272	288	304	320	336	352	368	384
L4	13	17.5	15.5	14	12	16.5	15	13

SY5000: 18 Pins Terminal Block/Plug-in

SS5Y5-45T1D-[Stations]U-C4, N3 C6, N7 C8, N9-Q (18 pins)

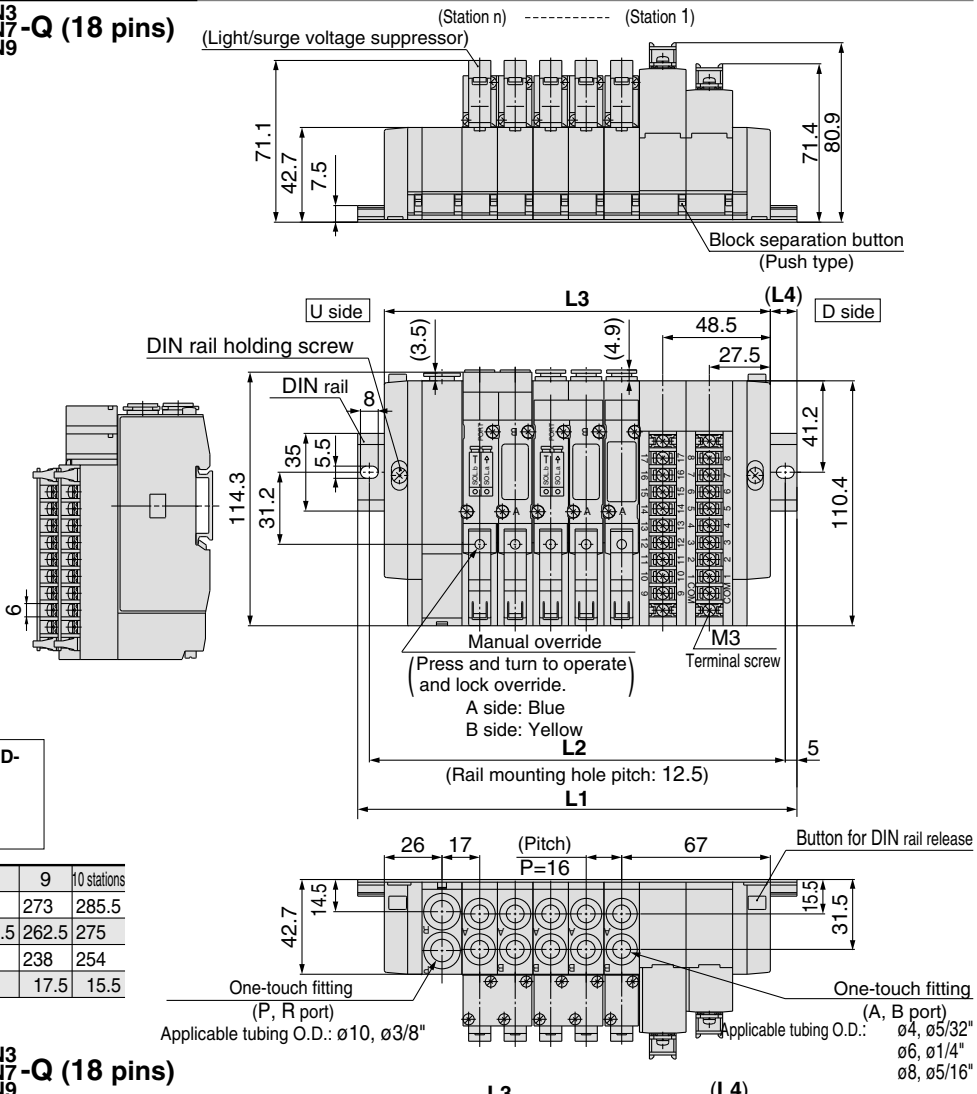

Note) **The L1** to **L4** dimensions of **SS5Y5-45T1D-[Stations]D-C4, N3 C6, N7 C8, N9** are identical to those of SS5Y5-45T1D-[Stations]U-C4, N3 C6, N7 C8, N9

Stations n	2 stations	3	4	5	6	7	8	9	10 stations
L1	160.5	173	185.5	198	223	235.5	248	273	285.5
L2	150	162.5	175	187.5	212.5	225	237.5	262.5	275
L3	126	142	158	174	190	206	222	238	254
L4	17	15.5	13.5	12	16.5	14.5	13	17.5	15.5

SS5Y5-45T1D-[Stations]B-C4, N3 C6, N7 C8, N9-Q (18 pins)

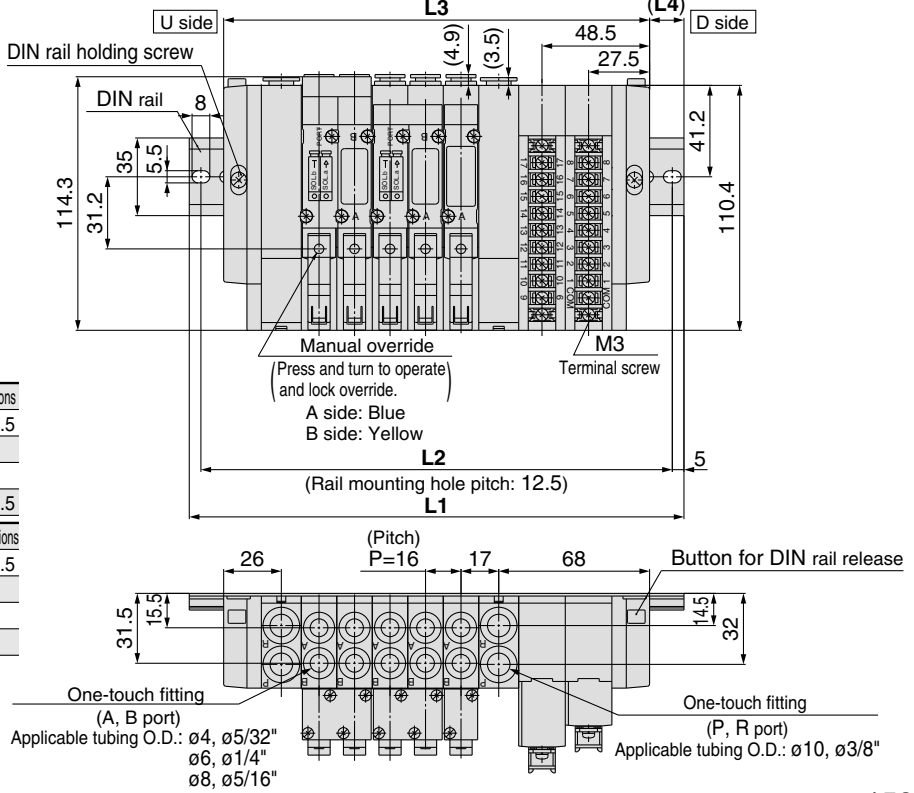

Stations n	2 stations	3	4	5	6	7	8	9 stations
L1	173	185.5	210.5	223	235.5	248	273	285.5
L2	162.5	175	200	212.5	225	237.5	262.5	275
L3	144	160	176	192	208	224	240	256
L4	14.5	12.5	17	15.5	13.5	12	16.5	14.5

Stations n	10 stations	11	12	13	14	15	16	17 stations
L1	298	323	335.5	348	360.5	385.5	398	410.5
L2	287.5	312.5	325	337.5	350	375	387.5	400
L3	272	288	304	320	336	352	368	384
L4	13	17.5	15.5	14	12	16.5	15	13

DIN Rail Manifold Exploded View

Type 45F (D-sub Connector) Manifold

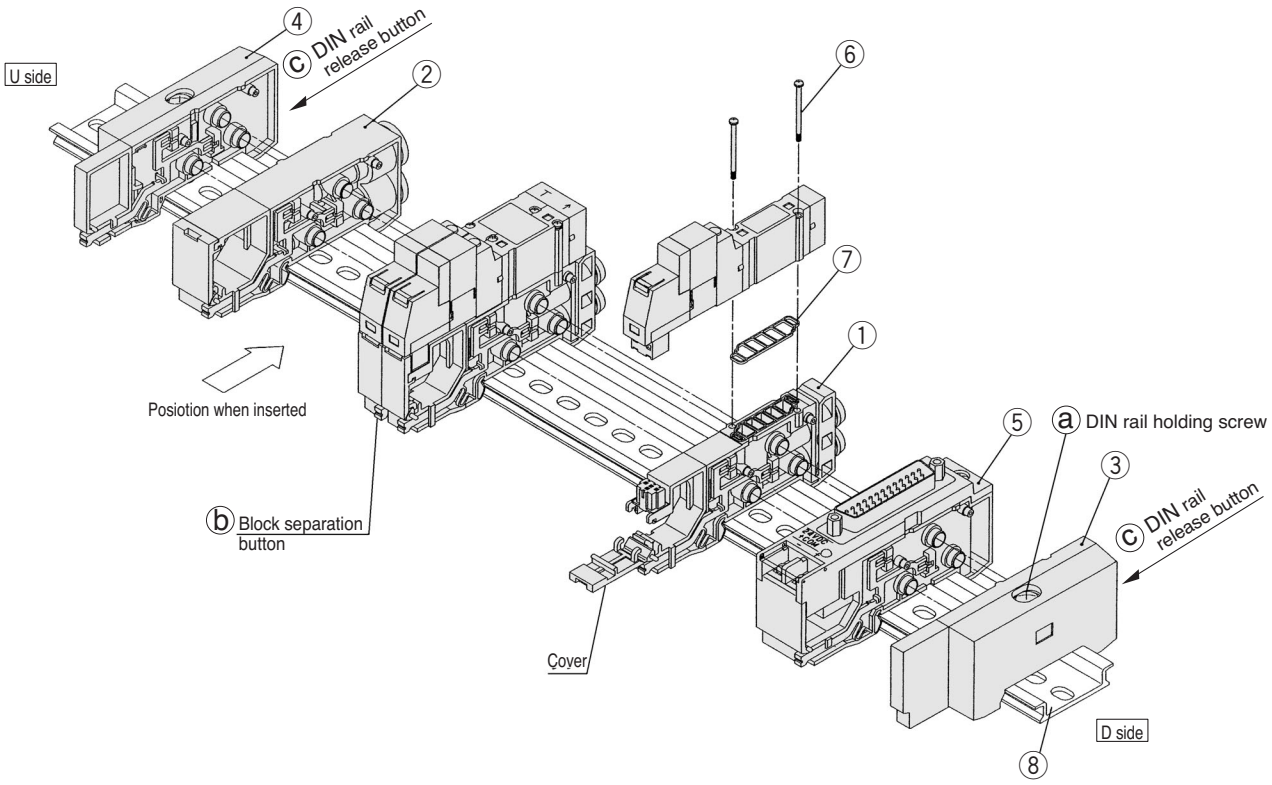

No.	Description	No.		Note	
		SY3000	**SY5000**		
1	Manifold block assembly	Manifold block assembly part number differs according to an attached lead wire assembly based on the connector spec. Select an appropriate part number from the table of manifold block assembly part number shown below. (Gasket 7 is supplied as an accessory.)			
2	SUP/EXH block assembly	(Metric size) SX3000-51-2A (Inch size) SX3000-51-16A	(Metric size) SX5000-51-2A (Inch size) SX5000-51-16A	Metric size SY3000: P, R port with one-touch fitting for ø8 SY5000: P, R port with one-touch fitting for ø10	Inch size With one-touch fitting for ø5/16" With one-touch fitting for ø3/8"
3	End block assembly	SX3000-52-2A-Q	SX5000-52-2A-Q	For D side	
4	End block assembly	SX3000-53-2A-Q	SX5000-53-2A-Q	For U side	
5-1	Connector block assembly (for D-sub connector)	SX3000-64-$^{1A}_{1NA}$	SX5000-64-$^{1A}_{1NA}$	-1A: +COM -1NA: -COM	Note) For 24 VDC
5-2	Connector block assembly (for 26 pins flat cable)	SX3000-64-$^{2A}_{2NA}$-26	SX5000-64-$^{2A}_{2NA}$-26	-2A: +COM -2NA: -COM	
5-3	Connector block assembly (for 20 pins flat cable)	SX3000-64-$^{2A}_{2NA}$-20	SX5000-64-$^{2A}_{2NA}$-20		
5-4	Connector block assembly (for 10 pins flat cable)	SX3000-64-$^{2A}_{2NA}$-10	SX5000-64-$^{2A}_{2NA}$-10		
5-5	Connector block assembly (for 2 to 8 stations (T, T1) terminal block)	SX3000-64-3A	SX5000-64-3A	In common between +COM and –COM.	
5-6	Connector block assembly (for 9 to 17 stations (T1) terminal block)	SX3000-64-8A	SX5000-64-8A		
6	Round head combination screw	SY3000-23-4	M3 x 26, Matt nickel plated		
7	Gasket	SX3000-57-4	SX5000-57-6		
8	DIN rail	VZ1000-11-1-l□		Refer to page 118.	

Note 1) The numbers 5-1 to 4 are for 24 VDC. For 12 VDC, suffix "-12V" to the end of parts number. (Example) SX3000-64-1A-12 V
Note 2) Two manifold block assemblies are necessary for the double, 3 position (Dual body type).

Type of manifold	Manifold block assembly part no.	Note
For 45(N)F (D-sub connector)	SX$^{3}_{5}$000-50-3A-□□(-Q)	□□: AB port SY3000 (metric size) C4: With One-touch fitting for ø4 C6: With One-touch fitting for ø6 (inch size) N3: With One-touch fittign for ø5/32" N7: With One-touch fitting for ø1/4" A, B port SY5000 (metric size) C4: With One-touch fitting for ø4 C6: With One-touch fitting for ø6 C8: With One-touch fitting for ø8 (inch size) N3: WIth One-touch fitting for ø5/32" N7: With One-touch fitting for ø1/4" N9: With One-touch fitting for ø5/16"
For 45(N)$^{P}_{PG}$ $^{}_{PH}$ (Flat ribbon cable)	SX$^{3}_{5}$000-50-5A-□□(-Q)	
For 45$^{T}_{T1}$ (Terminal block)	SX$^{3}_{5}$000-50-7A-□□(-Q)	

Note) The lead wire assembly is supplied with the manifold block assembly.

How to Increase Manifold Bases

1. Loosen DIN rail holding screw ⓐ fixing the manifold base until it begins to turn idly. (While pressing DIN rail releasing buttons ⓒ, at two locations, separate the manifold base from the DIN rail.)
2. Additional bases are to be added to the U side. Press splitting button ⓑ of the manifold block assembly on the U side until button ⓑ locks, and then separate the block assemblies.
3. Separate the connector block assembly in the same manner as 2, and remove the connector mounting screw shown in Fig. 1.
4. Loosen the valve mounting screw on the U side, remove the valve, and take out the receptacle housing. (Refer to Fig. 2.)
5. Insert the common wire (red) of the manifold block assembly to be added into the pin insertion section (N mark) of the receptacle housing that was taken out in 4, mount it on the manifold block, and mount the removed valve.
6. As shown in Fig. 3, mount the additional manifold block assembly on the DIN rail on the U side. Refer to the circuit diagram, and insert the lead wire (black) as shown in Fig. 4.
7. Press the blocks against each other until a click sound is produced, place the lead wire in the manifold block, and close the lid without pinching the lead wire.
8. While lightly holding the blocks together so that there are no gaps between them, secure them to the DIN rail by tightening the DIN rail holding screws ⓐ. ⚠ (Tightening torque: 1.4 N·m)

⚠ Caution

1. Depending on the connector, there is a limit to the number of solenoids that can be used. Manifold bases that can be added cannot exceed the number of usable solenoids.
2. The manifold block assembly mounting position for additional manifold bases is always on the U side, because wires are connected to respective connectors sequentially from the D side.
3. When DIN rail holding screw ⓐ for the end block is not sufficiently tightened during reassembly, air leakage may result. Before supplying air, check that there is no gap between blocks and that the manifold block is firmly fixed to the DIN rail in order to ensure air supply without leakage.

Fig. 1

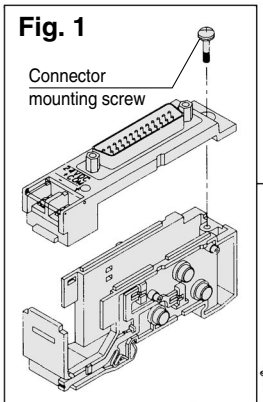

Fig. 2

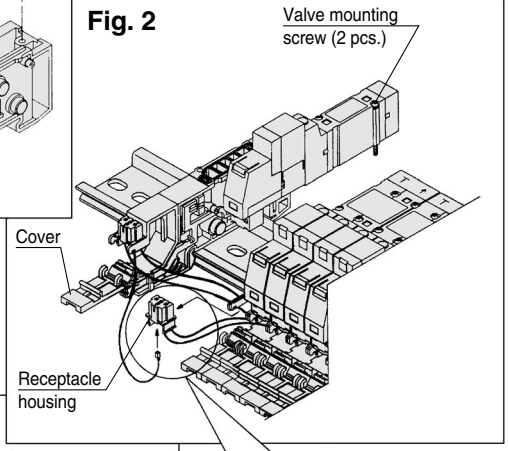

Fig. 3

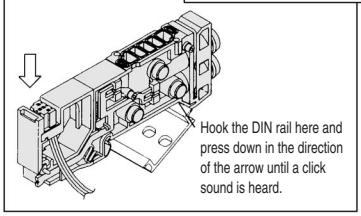

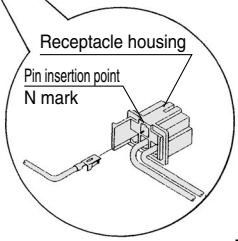

Fig. 4

D-sub connector (45F)

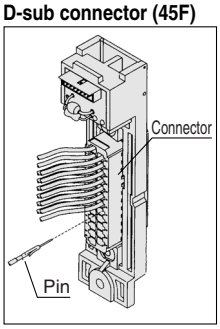

Note)
After inserting pins, lightly pull lead wiresto check that pins are locked.

Flat ribbon cable (45P□)

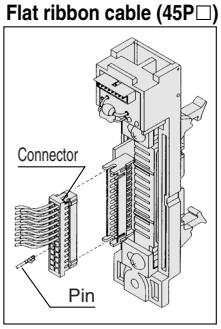

Note)
Insert pins after removing the connectorfrom the main unit. After inserting pins, lightly pull lead wires to check that the pins are locked.

Terminal block (45^{T}_{T1})

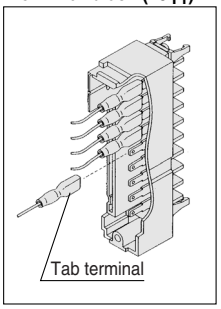

Note)
Insert tab terminals completely.

Fitting Assembly

Type 45 manifold permits change in the A and B port sizes by changing the manifold block fitting assembly.
After removing the valve, remove the clip with a screwdriver, etc. For mounting a new fitting assembly, insert it and then insert a clip until it will not come out of the manifold block.

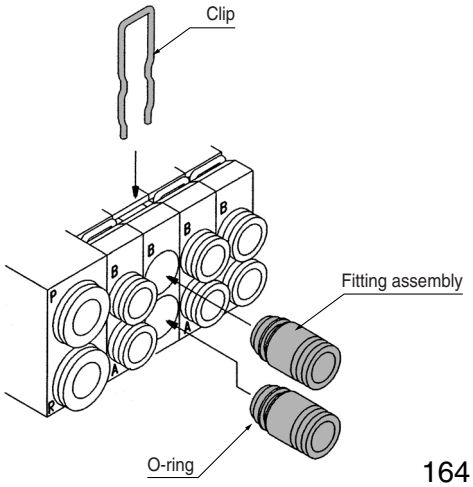

Fitting Assembly Part No.

Metric size

SY3000	One-touch fitting for ø4	VVQ1000-50A-C4
	One-touch fitting for ø6	VVQ1000-50A-C6
SY5000	One-touch fitting for ø4	VVQ1000-51A-C4
	One-touch fitting for ø6	VVQ1000-51A-C6
	One-touch fitting for ø8	VVQ1000-51A-C8

Inch size

SY3000	One-touch fitting for ø5/32"	VVQ1000-50A-N3
	One-touch fitting for ø1/4"	VVQ1000-50A-N7
SY5000	One-touch fitting for ø5/32"	VVQ1000-51A-N3
	One-touch fitting for ø1/4"	VVQ1000-51A-N7
	One-touch fitting for ø5/16"	VVQ1000-51A-N9

Note 1) P and R ports cannot be changed.
Note 2) Use caution that O-rings must be free from scratches and dust. Otherwise, air leakage may result.

Type 45S□

5 Port Solenoid Valve
Series SY3000/5000
Base Mounted
Stacking Type/DIN Rail Mounted

How to Order Manifold

SS5Y 3 – 45S V – 05 U – C6 – □ -Q

Series

3	SY3000
5	SY5000

SI unit specifications

Symbol	Protocol type
0	Without SI unit
Q	DeviceNet®
V	CC-LINK
ZB	CompoNet® (Positive common)
ZBN	CompoNet® (Negative common)

∗ Even though when it is not equipped with SI unit, DIN rail length is long enough for future expectancy of mounting SI unit.

Valve stations

Symbol	Stations	Note
02	2 stations	Single wining spec. (Applicable up to 16 solenoid valves.)
⋮	⋮	
16	16 stations	

∗ This also includes the number of blanking plate assemblies.
∗ Two stations are necessary for the double and 3 position solenoid valves (Dual body type).

SUP/EXH block assembly mounting position

Symbol	Mounting position	Stations
U	U side	2 to 10 stations
D	D side	2 to 10 stations
B	(Both sides)	2 to 16 stations
M	Special specifications	

∗ For special specifications, indicate separately by the manifold specification

A, B port size

One-touch fitting (Metric size)

Symbol	Port size	Applicable series
C4	One-touch fitting for ø4	SY3000
C6	One-touch fitting for ø6	
M	Mixed	
C4	One-touch fitting for ø4	SY5000
C6	One-touch fitting for ø6	
C8	One-touch fitting for ø8	
M	Mixed	

One-touch fitting (Inch size)

Symbol	Port size	Applicable series
N3	One-touch fitting for ø5/32"	SY3000
N7	One-touch fitting for ø1/4"	
M	Mixed	
N3	One-touch fitting for ø5/32"	SY5000
N7	One-touch fitting for ø1/4"	
N9	One-touch fitting for ø5/16"	
M	Mixed	

∗ In the case of mixed specifications, indicate separately on the manifold specification sheet.

Option

When a longer DIN rail is desired than the specified stations, specify the station number to be required. (Max. 16 stations)

SI Unit Part No.

Symbol	Protocol type	SI unit No.
Q	DeviceNet®	EX122-SDN1
V	CC-LINK	EX122-SMJ1
ZB	CompoNet® (Positive common)	EX122-SCM1
ZBN	CompoNet® (Negative common)	EX122-SCM3

How to Order Valve Manifold Assembly (Example)

Example

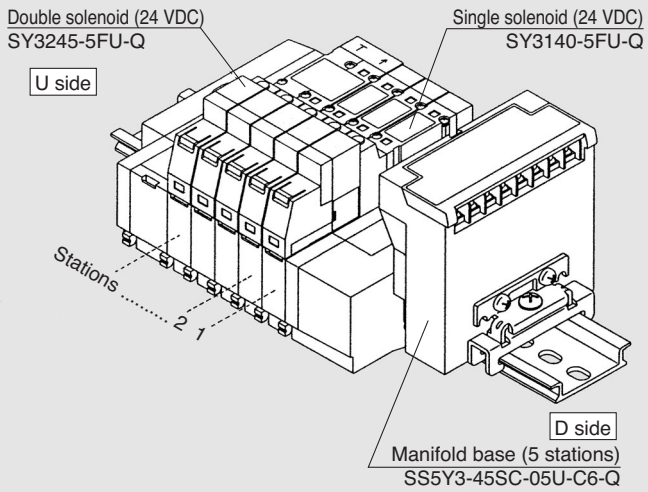

SS5Y3-45SC-05U-C6-Q **1 set (45S with serial unit 5 Stations Manifold base part number)**
∗ **SY3140-5FU-Q** **3 sets (Single solenoid part no.)**
∗ **SY3245-5FU-Q** **1 set (Double solenoid part no.)**

→ The asterisk denotes the symbol for assembly. Prefix it to the part nos. of the solenoid valve, etc.

∗ The valve arrangement is numbered as the 1st. station from D side.
∗ When ordering double solenoid valves/3 position (Dual body type), please keep in mind that they require two manifold stations.
∗ Serial unit is available only for the D-side mounting type.

How to Order Valve

2 position single **SY 3 1 4 0 – 5 FU □ – □ -Q**

Double, 3 position **SY 3 2 4 5 – 5 FU □ – □ -Q**

Series

3	SY3000
5	SY5000

Type of actuation

2	2 position double
3	3 position closed centre
4	3 position exhaust centre
5	3 position pressure centre

Dual body type (Double, 3 position)

Rated voltage

5	24 VDC

Manual override

-	Non-locking push type
D	Push-turn locking slotted type
E	Push-turn locking lever type

Made to Order

-	—
X90	Main valve fluororubber

∗ When ordering plug-in type solenoid valve as a single unit, gaskets are not included. Order them separately, if necessary.
∗ With light/surge voltage suppressor (Non-polar type)

Series SY3000: Serial Transmission Unit/Plug-in

SS5Y3-45S□-Stations U-C4, N3 / C6, N7 -Q (for SI unit types C, Q, R1, R2 and V)

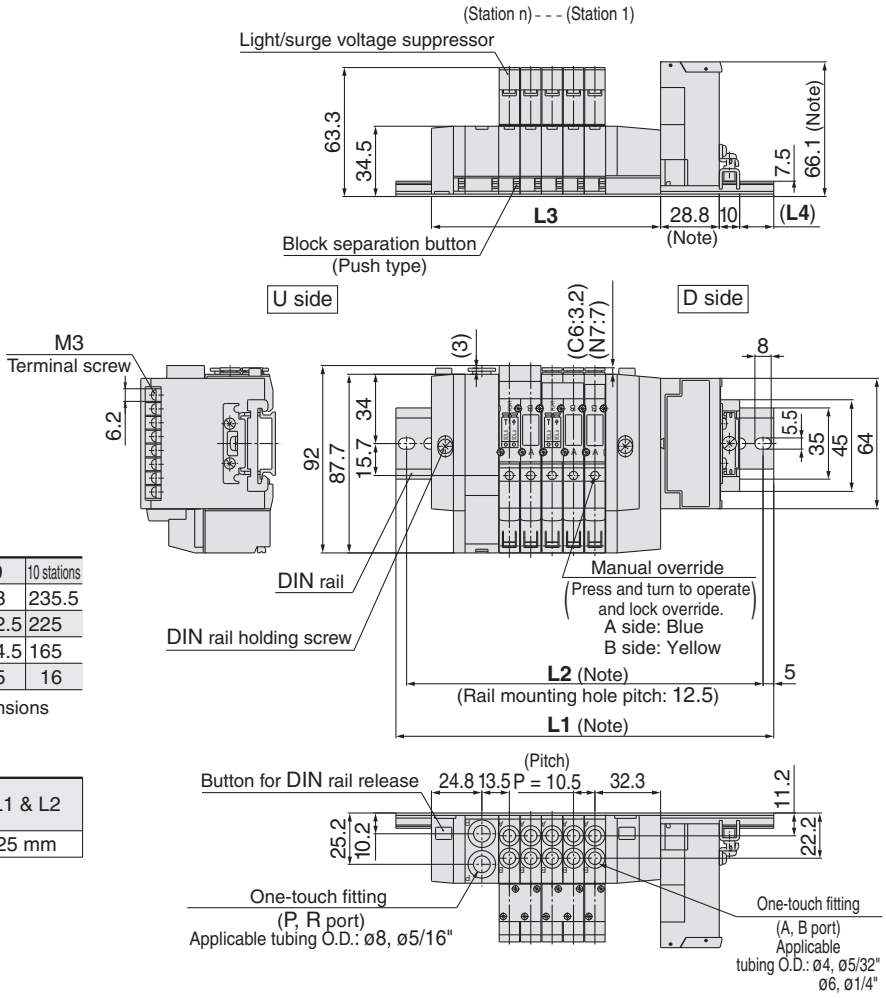

Stations n	2 stations	3	4	5	6	7	8	9	10 stations
L1	148	160.5	173	185.5	185.5	198	210.5	223	235.5
L2	137.5	150	162.5	175	175	187.5	200	212.5	225
L3	81	91.5	102	112.5	123	133.5	144	154.5	165
L4	14.5	15.5	16.5	17.5	12	13	14	15	16

Note) For SI unit types P, T2, T4, and T5, the dimensions below increase by the values shown:

SI Unit type	SI Unit height	SI Unit length	L1 & L2
T2, T4, T5	22.5 mm	24.3 mm	25 mm

SS5Y3-45S□-Stations B-C4, N3 / C6, N7 -Q (for SI unit types C, Q, R1, R2 and V)

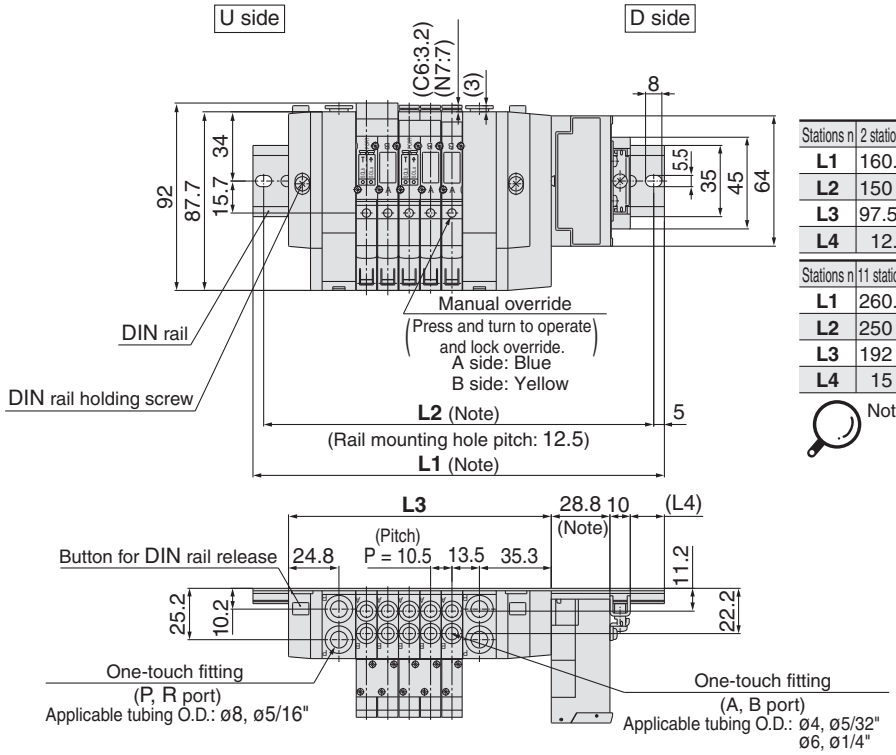

Stations n	2 stations	3	4	5	6	7	8	9	10 stations
L1	160.5	173	185.5	198	210.5	223	223	235.5	248
L2	150	162.5	175	187.5	200	212.5	212.5	225	237.5
L3	97.5	108	118.5	129	139.5	150	160.5	171	181.5
L4	12.5	13.5	14.5	15.5	16.5	17.5	12	13	14

Stations n	11 stations	12	13	14	15	16 stations
L1	260.5	273	285.5	285.5	298	310.5
L2	250	262.5	275	275	287.5	300
L3	192	202.5	213	223.5	234	244.5
L4	15	16	17	12	13	14

Note) For SI unit types P, T2, T4, and T5, the dimensions below increase by the values shown:

SI Unit type	SI Unit height	SI Unit length	L1 & L2
T2, T4, T5	22.5 mm	24.3 mm	25 mm

Series SY5000: Serial Transmission Unit/Plug-in

SS5Y5-45S□-**Stations** U-C4, N3 / C6, N7 / C8, N9 -Q (for SI unit types C, Q, R1, R2 and V)

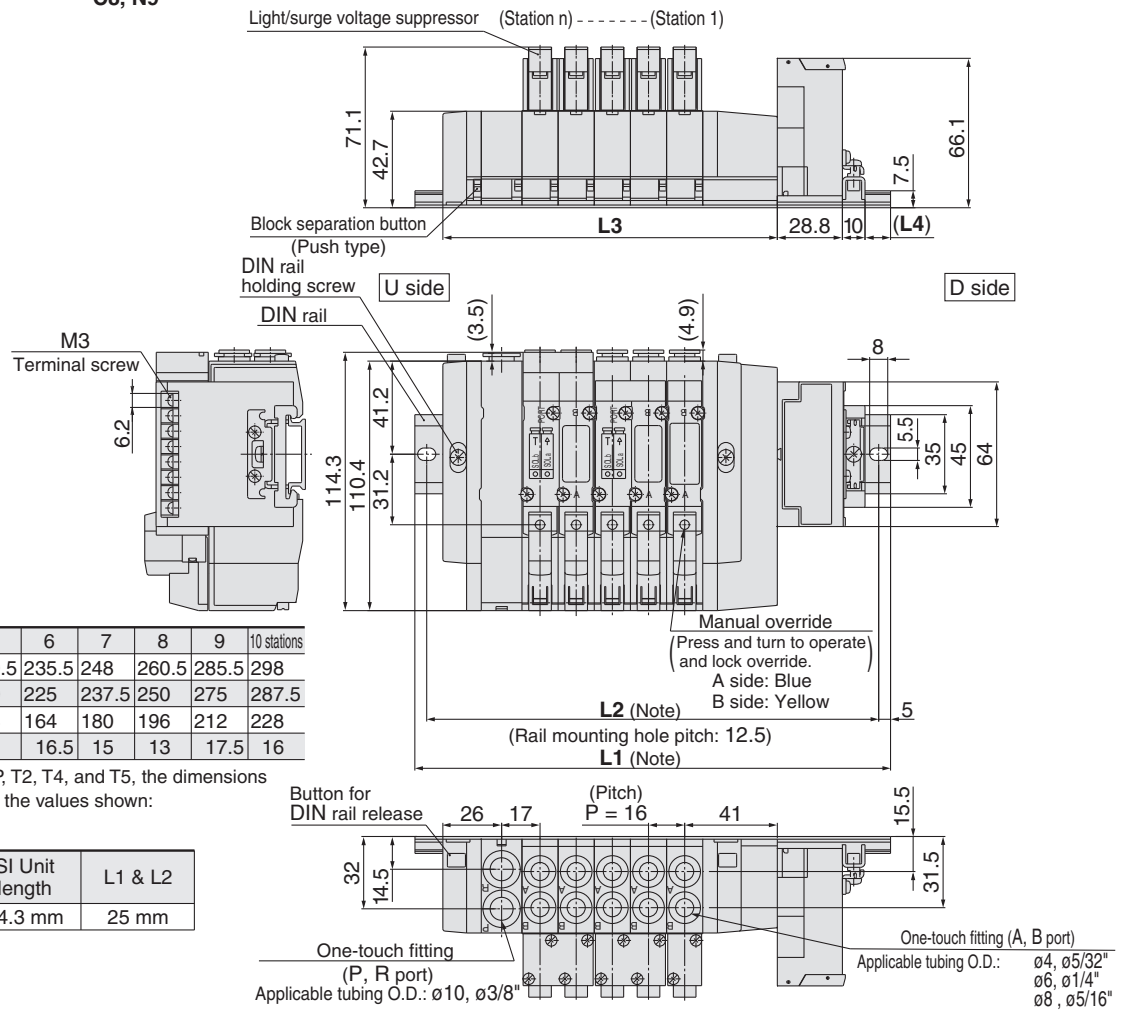

Stations n	2 stations	3	4	5	6	7	8	9	10 stations
L1	173	185.5	198	210.5	235.5	248	260.5	285.5	298
L2	162.5	175	187.5	200	225	237.5	250	275	287.5
L3	100	116	132	148	164	180	196	212	228
L4	17.5	15.5	14	12	16.5	15	13	17.5	16

Note) For SI unit types P, T2, T4, and T5, the dimensions below increase by the values shown:

SI Unit type	SI Unit height	SI Unit length	L1 & L2
T2, T4, T5	22.5 mm	24.3 mm	25 mm

SS5Y5-45S□-**Stations** B-C4, N3 / C6, N7 / C8, N9 -Q (for SI unit types C, Q, R1, R2 and V)

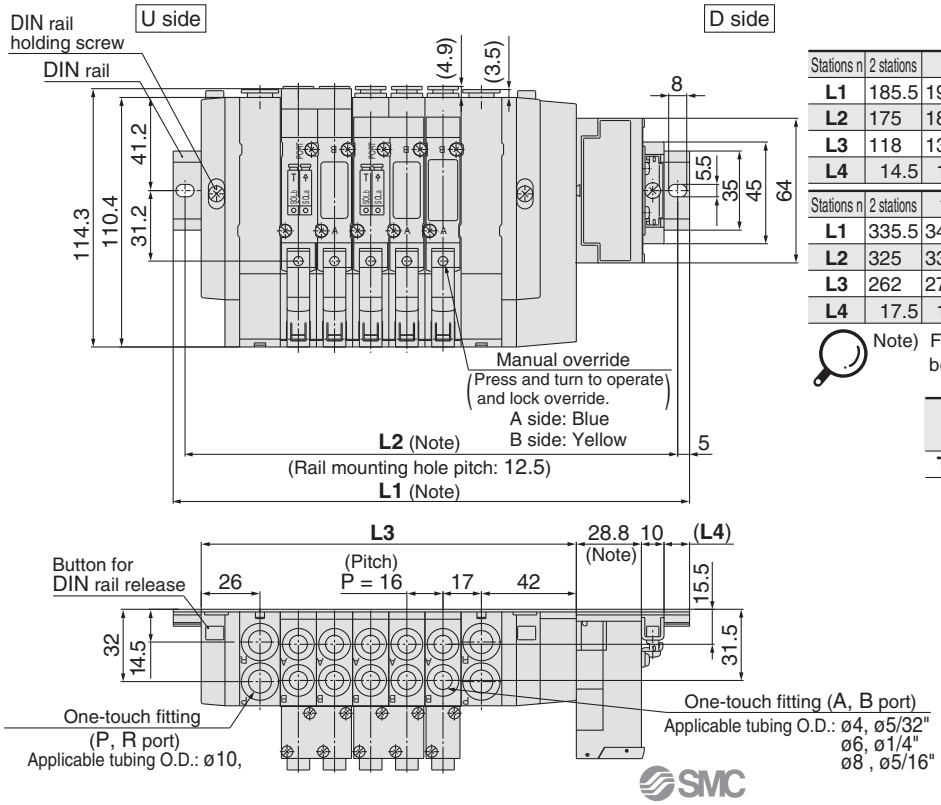

Stations n	2 stations	3	4	5	6	7	8	9	10 stations
L1	185.5	198	223	235.5	248	260.5	285.5	298	310.5
L2	175	187.5	212.5	225	237.5	250	275	287.5	300
L3	118	134	150	166	182	198	214	230	246
L4	14.5	13	17.5	15.5	14	12	16.5	15	13

Stations n	2 stations	12	13	14	15	16 stations
L1	335.5	348	360.5	373	398	410.5
L2	325	337.5	350	362.5	387.5	400
L3	262	278	294	310	326	342
L4	17.5	16	14	12.5	17	15

Note) For SI unit types P, T2, T4, and T5, the dimensions below increase by the values shown:

SI Unit type	SI Unit height	SI Unit length	L1 & L2
T2, T4, T5	22.5 mm	24.3 mm	25 mm

Type 45S1□

5 Port Solenoid Valve
Series SY3000/5000
Base Mounted
Stacking Type/DIN Rail Mounted
Serial Transmission Unit (Separate type)

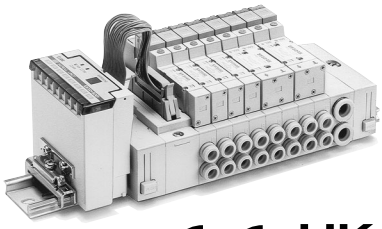

How to Order Manifold

SS5Y 3 – 45S1 V D – 05 U – C4 – □ -Q

Series

3	SY3000
5	SY5000

SI unit specifications

Symbol	Protocol type
0	Without SI unit
Q	DeviceNet®
V	CC-LINK
ZB	CompoNet® (Positive common)
ZBN	CompoNet® (Negative common)

- Even though when it is not equipped with SI unit, DIN rail length is long enough for future expectancy of mounting SI unit. When a shorter rail is required (same as type 45□), suffix "0" in the optional blank at the end of part number.

Option

When a longer DIN rail is desired than the specified stations, specify the station number to be required. (Max. 16 stations)

A, B port size

One-touch fitting (Metric size)

Symbol	Port size	Applicable series
C4	One-touch fitting for ø4	SY3000
C6	One-touch fitting for ø6	
M	Mixed	
C4	One-touch fitting for ø4	SY5000
C6	One-touch fitting for ø6	
C8	One-touch fitting for ø8	
M	Mixed	

One-touch fitting (Inch size)

Symbol	Port size	Applicable series
N3	One-touch fitting for ø5/32"	SY3000
N7	One-touch fitting for ø1/4"	
M	Mixed	
N3	One-touch fitting for ø5/32"	SY5000
N7	One-touch fitting for ø1/4"	
N9	One-touch fitting for ø5/16"	
M	Mixed	

∗ In the case of mixed specifications, indicate separately on the manifold specification sheet.

SUP/EXH block assembly mounting position

Symbol	Mounting position	Stations
U	U side	2 to 10 stations
D	D side	2 to 10 stations
B	Both sides	2 to 16 stations
M	Special specifications	

∗ For special specifications, indicate separately by the manifold specification sheet.

Valve stations

Symbol	Stations	Note
02	2 stations	Single wiring spec. (Applicable up to 16 solenoid valves.)
⋮	⋮	
16	16 stations	

∗ This also includes the number of blanking plate assemblies.
∗ Two stations are necessary for the double, and 3 position solenoid valves (Dual body type).

SI unit mounting position

Symbol	Mounting position
U	U side
D	D side

SI Unit Part No.

Symbol	Protocol type	SI unit No.
Q	DeviceNet®	EX121-SDN1
V	CC-LINK	EX121-SMJ1
ZB	CompoNet® (Positive common)	EX121-SCM1
ZBN	CompoNet® (Negative common)	EX121-SCM3

• For external pilot specifications and built-in silencer, refer to pages 203 to 207.

How to Order Valve Manifold Assembly (Example)

Example

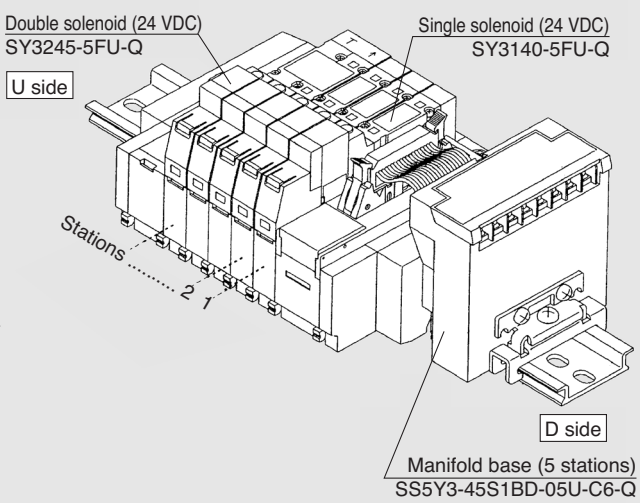

S5Y3-45S1CD-05U-C6-Q	1 set	(Type 45S1 with serial unit 5 station manifold base part no.)
∗ SY3140-5FU-Q	3 sets	(Single solenoid part no.)
∗ SY3245-5FU-Q	1 set	(Double solenoid part no.)

∗ The asterisk denotes the symbol for assembly. Prefix it to the part nos. of the solenoid valve, etc.

- The valve arrangement is numbered as the 1st. station from D side regardless of the mounting position of SI unit.
- When ordering double solenoid valves/3 position (Dual body type), please keep in mind that they require two manifold stations.

How to Order Valve

CE UKCA

2 position single **SY 3 1 4 0 — 5 FU □ -Q**

Double and 3 position **SY 3 2 4 5 — 5 FU □ -Q**

Series

3	SY3000
5	SY5000

Type of actuation

2	2 position double
3	3 position closed center
4	3 position exhaust center
5	3 position pressure center

Dual body type (Double and 3 position)

Rated voltage

5	24 VDC

Manual override

-	Non-locking push type
D	Push-turn locking slotted type
E	Push-turn locking lever type

∗ When ordering plug-in type solenoid valve as a single unit, gaskets are not included. Order them separately, if necessary.
∗ With light/surge voltage suppressor (Non-polar type)

SY3000: Serial Transmission Unit/Plug-in

SS5Y3-45S1□U-[Stations]D-$^{C4, N3}_{C6, N7}$-Q (for SI unit types C, Q, R1, R2 and V)

Note) The **L1** to **L4** dimensions of **SS5Y3-45S1□U-[Stations]U-$^{C4, N3}_{C6, N7}$** are identical to those of SS5Y3-45S1□U-[Stations]D-$^{C4, N3}_{C6, N7}$.

Stations n	2 stations	3	4	5	6	7	8	9	10 stations
L1	160.5	173	185.5	198	198	210.5	223	235.5	248
L2	150	162.5	175	187.5	187.5	200	212.5	225	237.5
L3	91.5	102	112.5	123	133.5	144	154.5	165	175.5
L4	14	15	16	17	12	13	14	15	16

Note) For SI unit types N, P, T2, T4, T5 and Y, the dimensions below increase by the values shown

SI Unit type	SI Unit height	SI Unit length	L1 & L2
T2, T4, T5	22.5 mm	24.3 mm	25 mm

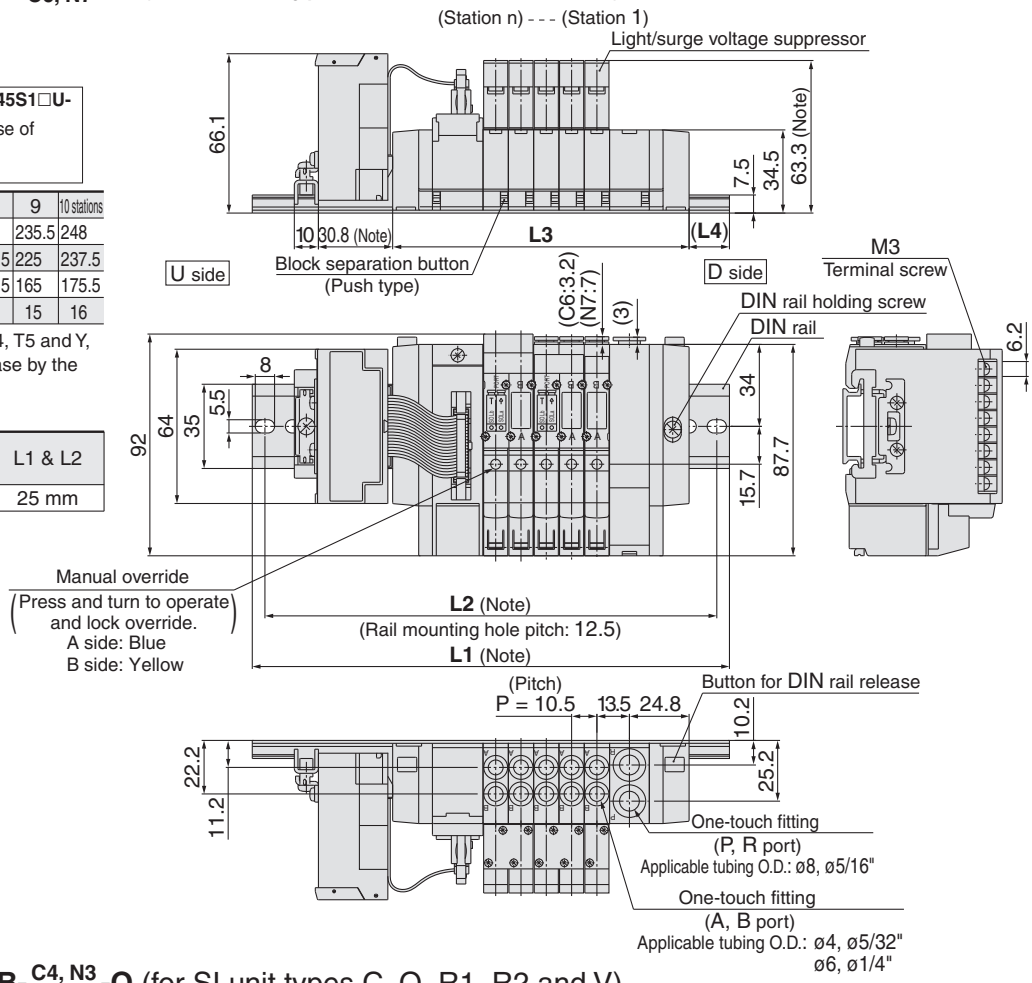

SS5Y3-45S1□U-[Stations]B-$^{C4, N3}_{C6, N7}$-Q (for SI unit types C, Q, R1, R2 and V)

Stations n	2 stations	3	4	5	6	7	8	9	10 stations
L1	173	185.5	198	210.5	223	235.5	235.5	248	260.5
L2	162.5	175	187.5	200	212.5	225	225	237.5	250
L3	108	118.5	129	139.5	150	160.5	171	181.5	192
L4	12	13	14	15	16	17	12	13	14

Stations n	11 stations	12	13	14	15	16 stations
L1	273	285.5	298	298	310.5	323
L2	262.5	275	287.5	287.5	300	312.5
L3	202.5	213	223.5	234	244.5	255
L4	15	16	17	11.5	12.5	13.5

Note) Width of SI unit applicable to "E": Matsushita Electric Works, Ltd. and "G": Rockwell Automation, Inc. (Allen-Bradley) widens to 24.3 mm. For further information, please consult with SMC.

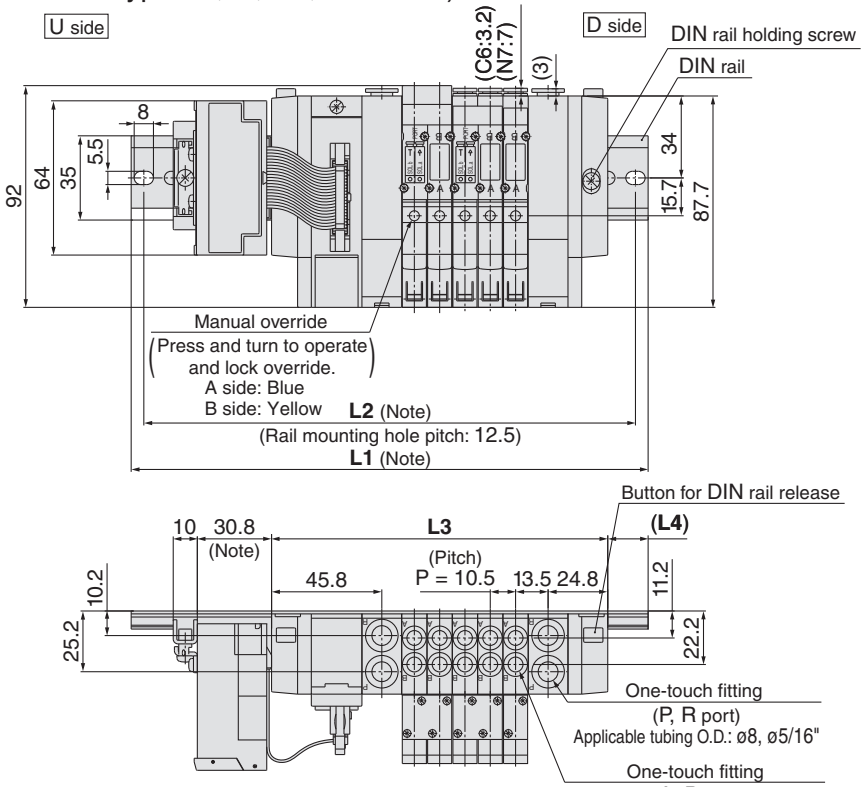

SY3000: Serial Transmission Unit/Plug-in

SS5Y3-45S1□D-[Stations]U-C4, N3 C6, N7 -Q (for SI unit types C, Q, R1, R2 and V)

Note) The **L1** to **L4** dimensions of **SS5Y3-45S1□D-[Stations]D-C4, N3 C6, N7** are identical to those of SS5Y3-45S1□D-[Stations]U-C4, N3 C6, N7.

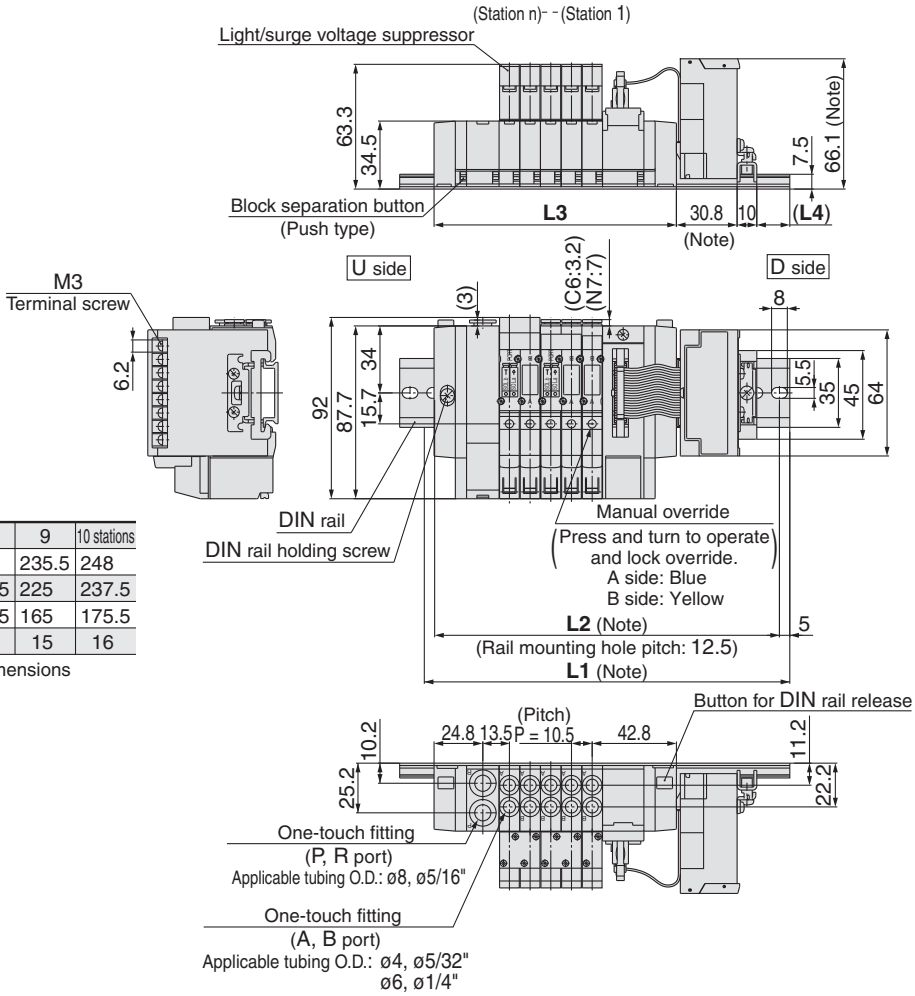

Stations n	2 stations	3	4	5	6	7	8	9	10 stations
L1	160.5	173	185.5	198	198	210.5	223	235.5	248
L2	150	162.5	175	187.5	187.5	200	212.5	225	237.5
L3	91.5	102	112.5	123	133.5	144	154.5	165	175.5
L4	14	15	16	17	12	13	14	15	16

Note) For SI unit types P, T2, T4, and T5, the dimensions below increase by the values shown:

SI Unit type	SI Unit height	SI Unit length	L1 & L2
T2, T4, T5	22.5 mm	24.3 mm	25 mm

SS5Y3-45S1□D-[Stations]B-C4, N3 C6, N7 -Q (for SI unit types C, Q, R1, R2 and V)

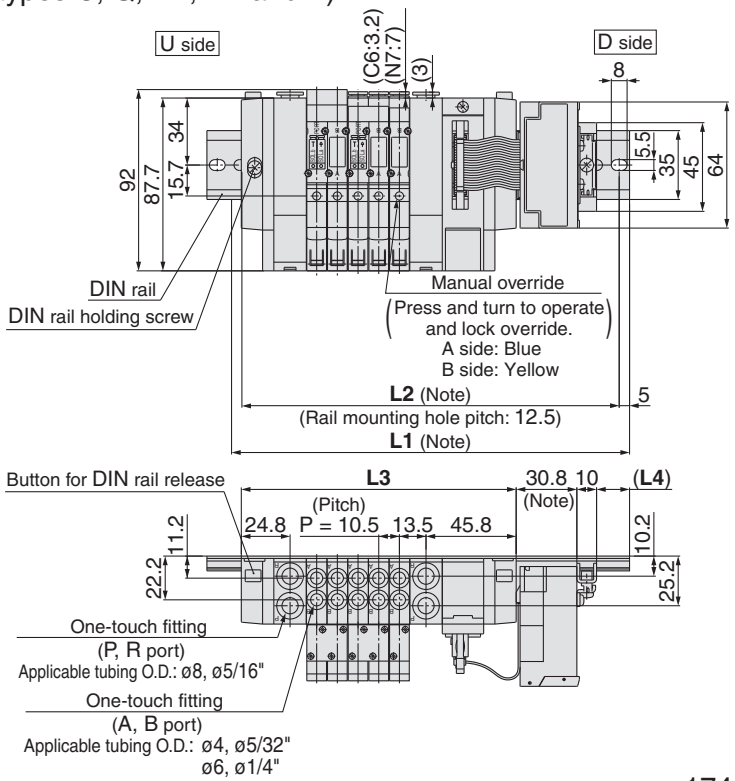

Stations n	2 stations	3	4	5	6	7	8	9	10 stations
L1	173	185.5	198	210.5	223	235.5	235.5	248	260.5
L2	162.5	175	187.5	200	212.5	225	225	237.5	250
L3	108	118.5	129	139.5	150	160.5	171	181.5	192
L4	12	13	14	15	16	17	12	13	14

Stations n	11 stations	12	13	14	15	16 stations
L1	273	285.5	298	298	310.5	323
L2	262.5	275	287.5	287.5	300	312.5
L3	202.5	213	223.5	234	244.5	255
L4	15	16	17	11.5	12.5	13.5

Note) For SI unit types P, T2, T4, and T5, the dimensions below increase by the values shown:

SI Unit type	SI Unit height	SI Unit length	L1 & L2
T2, T4, T5	22.5 mm	24.3 mm	25 mm

SY5000: Serial Transmission Unit/Plug-in

SS5Y5-45S1□U-Stations D-C4, N3 C6, N7 C8, N9-Q (for SI unit types C, Q, R1, R2 and V)

Note) The **L1** to **L4** dimensions of **SS5Y5-45S1□U-Stations U-C4, N3 C6, N7 C8, N9** are identical to those of SS5Y5-45S1□U-Stations D-C4, N3 C6, N7 C8, N9.

Stations n	2 stations	3	4	5	6	7	8	9	10 stations
L1	173	185.5	210.5	223	235.5	260.5	273	285.5	298
L2	162.5	175	200	212.5	225	250	262.5	275	287.5
L3	105	121	137	153	169	185	201	217	233
L4	13.5	12	16.5	14.5	13	17.5	15.5	14	12

Note) For SI unit types N, P, T2, T4, T5 and Y, the dimensions below increase by the values shown:

SI Unit type	SI Unit height	SI Unit length	L1 & L2
T2, T4, T5	22.5 mm	24.3 mm	25 mm

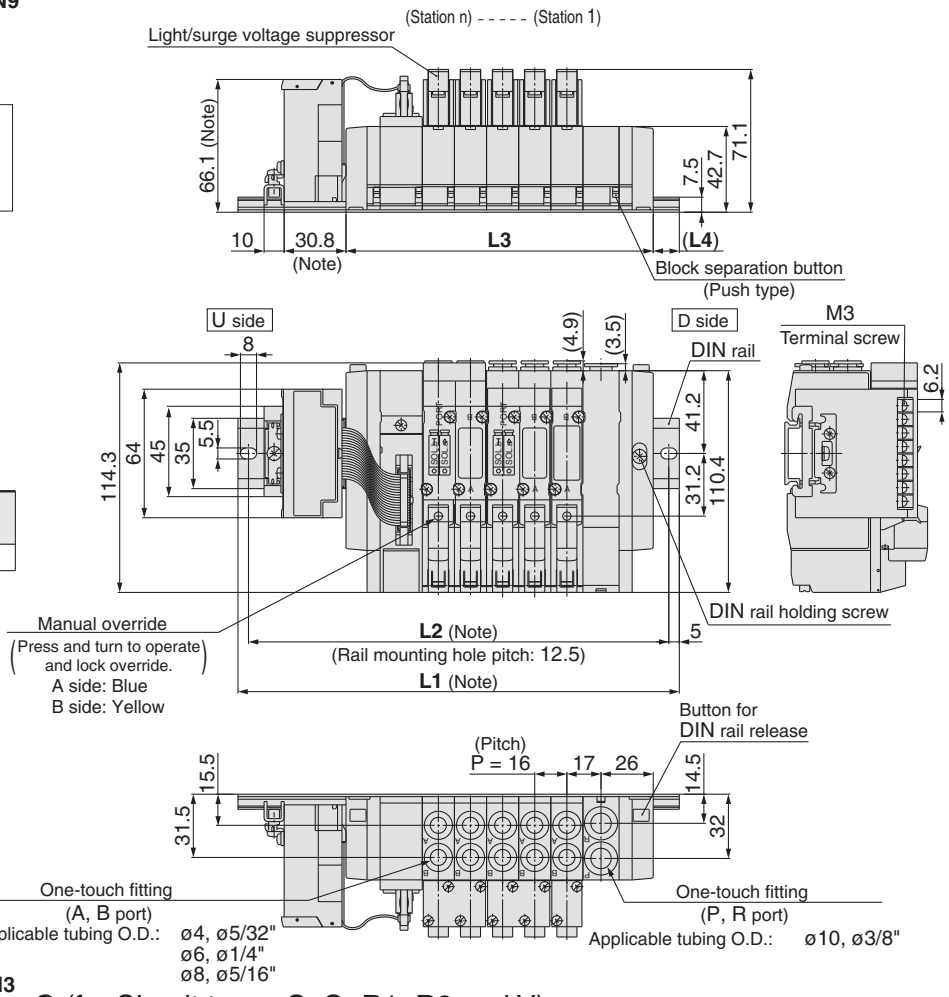

SS5Y5-45S1□U-Stations B-C4, N3 C6, N7 C8, N9-Q (for SI unit types C, Q, R1, R2 and V)

Stations n	2 stations	3	4	5	6	7	8	9	10 stations
L1	198	210.5	223	235.5	260.5	273	285.5	310.5	323
L2	187.5	200	212.5	225	250	262.5	275	300	312.5
L3	123	139	155	171	187	203	219	235	251
L4	17	15.5	13.5	12	16.5	14.5	13	17.5	15.5

Stations n	11 stations	12	13	14	15	16 stations
L1	335.5	348	373	385.5	398	410.5
L2	325	337.5	362.5	375	387.5	400
L3	267	283	299	315	331	347
L4	14	12	16.5	15	13	11.5

Note) For SI unit types N, P, T2, T4, T5 and Y, the dimensions below increase by the values shown:

SI Unit type	SI Unit height	SI Unit length	L1 & L2
T2, T4, T5	22.5 mm	24.3 mm	25 mm

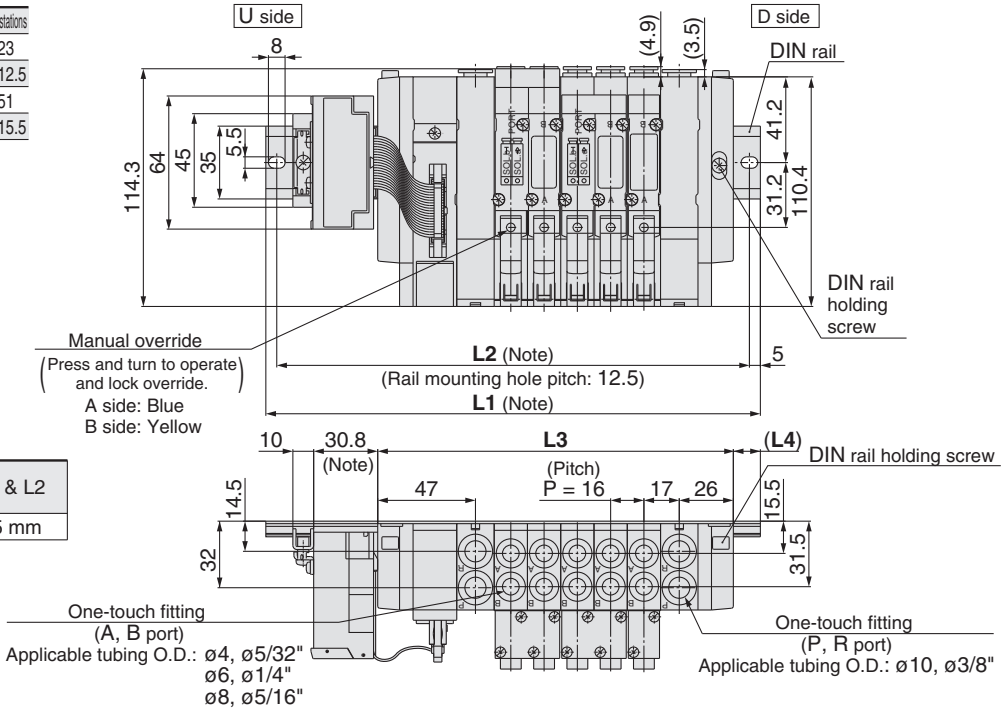

SY5000: Serial Transmission Unit/Plug-in

SS5Y5-45S1□D-Stations U-C4, N3 C6, N7 C8, N9 -Q (for SI unit types C, Q, R1, R2 and V)

Stations n	2 stations	3	4	5	6	7	8	9	10 stations
L1	173	185.5	210.5	223	235.5	260.5	273	285.5	298
L2	162.5	175	200	212.5	225	250	262.5	275	287.5
L3	105	121	137	153	169	185	201	217	233
L4	13.5	12	16.5	14.5	13	17.5	15.5	14	12

Note) For SI unit types N, P, T2, T4, T5 and Y, the dimensions below increase by the values shown:

SI Unit type	SI Unit height	SI Unit length	L1 & L2
T2, T4, T5	22.5 mm	24.3 mm	25 mm

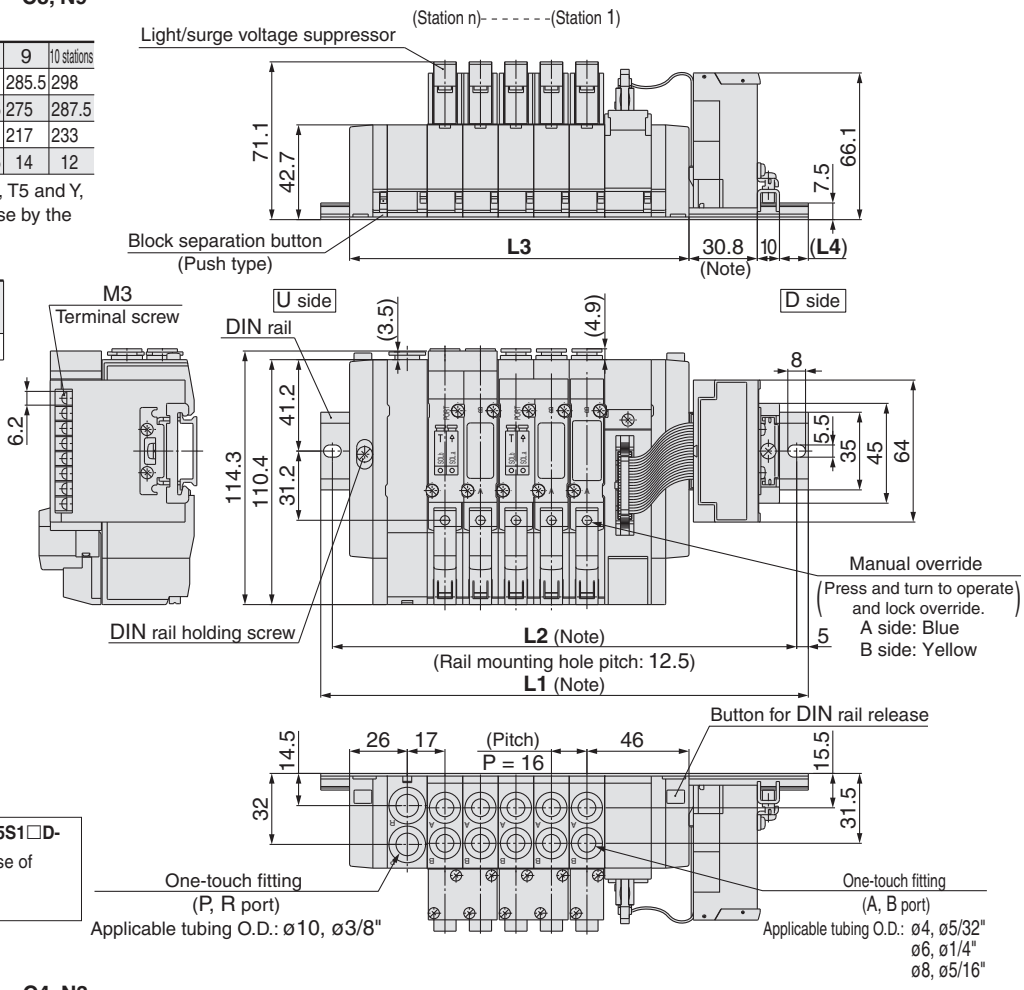

Note) The **L1** to **L4** dimensions of **SS5Y5-45S1□D-Stations** (C4, N3 / C6, N7 / C8, N9) are identical to those of SS5Y5-45S1□D-Stations U-(C4, N3 / C6, N7 / C8, N9).

SS5Y5-45S1□D-Stations B-C4, N3 C6, N7 C8, N9 -Q (for SI unit types C, Q, R1, R2 and V)

Stations n	2 stations	3	4	5	6	7	8	9	10 stations
L1	198	210.5	223	235.5	260.5	273	285.5	310.5	323
L2	187.5	200	212.5	225	250	262.5	275	300	312.5
L3	123	139	155	171	187	203	219	235	251
L4	17	15.5	13.5	12	16.5	14.5	13	17.5	15.5

Stations n	11 stations	12	13	14	15	16 stations
L1	335.5	348	373	385.5	398	410.5
L2	325	337.5	362.5	375	387.5	400
L3	267	283	299	315	331	347
L4	14	12	16.5	15	13	11.5

Note) For SI unit types N, P, T2, T4, T5 and Y, the dimensions below increase by the values shown:

SI Unit type	SI Unit height	SI Unit length	L1 & L2
T2, T4, T5	22.5 mm	24.3 mm	25 mm

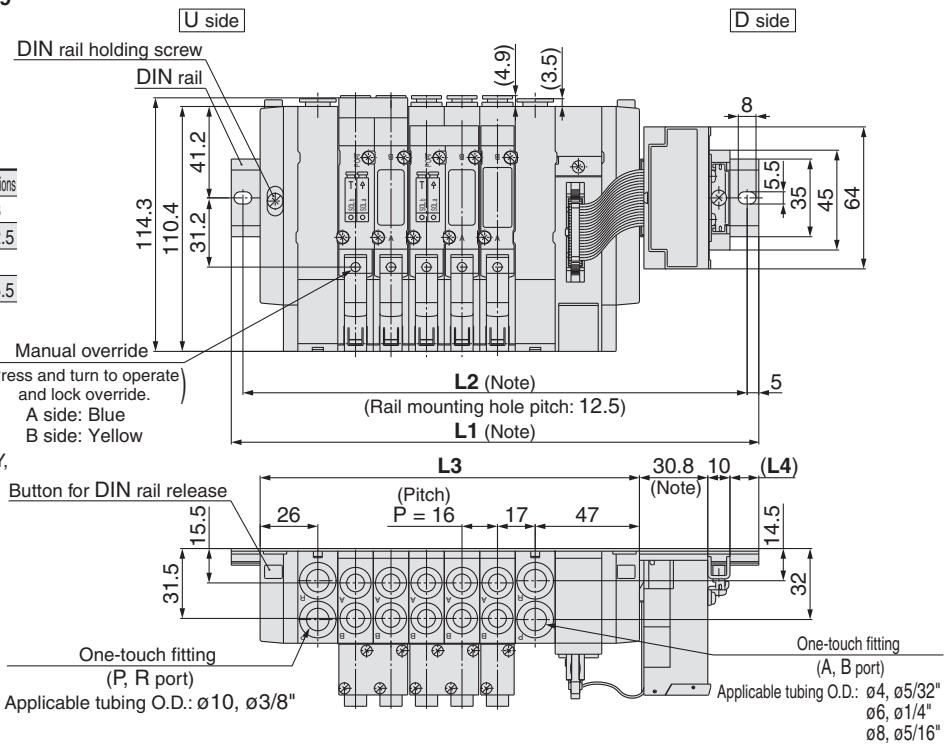

EX510 Gateway-type Serial Transmission System
Base Mounted Manifold/Stacking Type/Plug-in Type

Type 45S6B

Series SY3000/5000

How to Order Manifold

SS5Y 3 – 45S6B [ ] U – 02 U [ ] – C4 – [ ] – Q

Manifold series

3	SY3000
5	SY5000

SI unit

Nil	NPN output (+COM.)
N	PNP output (–COM.)

SI unit mounting position

U	U side
D	D side

Valve stations

Symbol	Stations	Note
02	2 stations	Compatible with 16 solenoid valves
⋮	⋮	
16	16 stations	

*The number of the blanking plate assembly is also included.

Option
When a DIN rail that is longer than the specified stations is desired, specify the required station number. (Max. 20 stations)

A, B port size

One-touch fitting (Metric size)

Symbol	Port size	Applicable series
C4	One-touch fitting for ø4	SY3000
C6	One-touch fitting for ø6	
M	Mixed	
C4	One-touch fitting for ø4	SY5000
C6	One-touch fitting for ø6	
C8	One-touch fitting for ø8	
M	Mixed	

One-touch fitting (Inch size)

Symbol	Port size	Applicable series
N3	One-touch fitting for ø5/32"	SY3000
N7	One-touch fitting for ø1/4"	
M	Mixed	
N3	One-touch fitting for ø5/32"	SY5000
N7	One-touch fitting for ø1/4"	
N9	One-touch fitting for ø5/16"	
M	Mixed	

• For the mixed specification, indicate separately on a manifold specification sheet.

Pilot specifications

Nil	Internal pilot
S	Internal pilot/built-in silencer
R	External pilot
RS	External pilot/built-in silencer

SUP/EXH block assembly mounting position

U	U side	2 to 10 stations
D	D side	
B	Both sides	2 to 16 stations
M	Special specifications*	

*For the special specifications, indicate separately on a manifold specification sheet.

SI unit part no.

Symbol	SI unit specifications	SI unit part no.
Nil	NPN output (+COM.)	EX510-S002A
N	PNP output (–COM.)	EX510-S102A

How to Order Manifold Assembly (Example)

Example

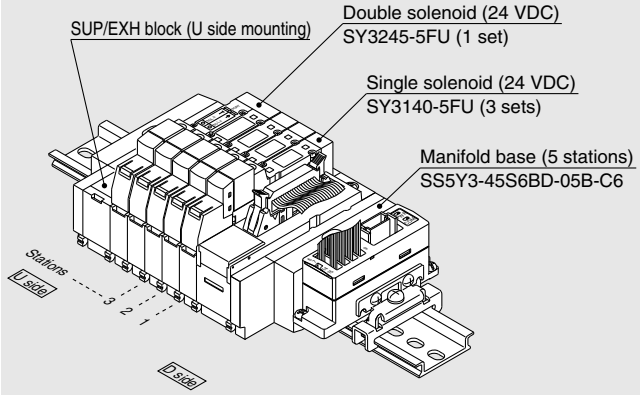

SS5Y3-45S6BD-05U-C6···1 set (45S6B type 5-station manifold part no.)
*** SY3140-5FU·····3 sets (Single solenoid part no.)**
*** SY3245-5FU·····1 set (Double solenoid part no.)**
→The asterisk denotes the symbol for assembly. Prefix to the part no. of the solenoid valve, etc.

• They will be assembled in the order listed starting at the first station at the D side whether the connector box is located at either end.
• When ordering double solenoid valves/3 position (dual body type), please keep in mind that they require two manifold stations.

How to Order Valves

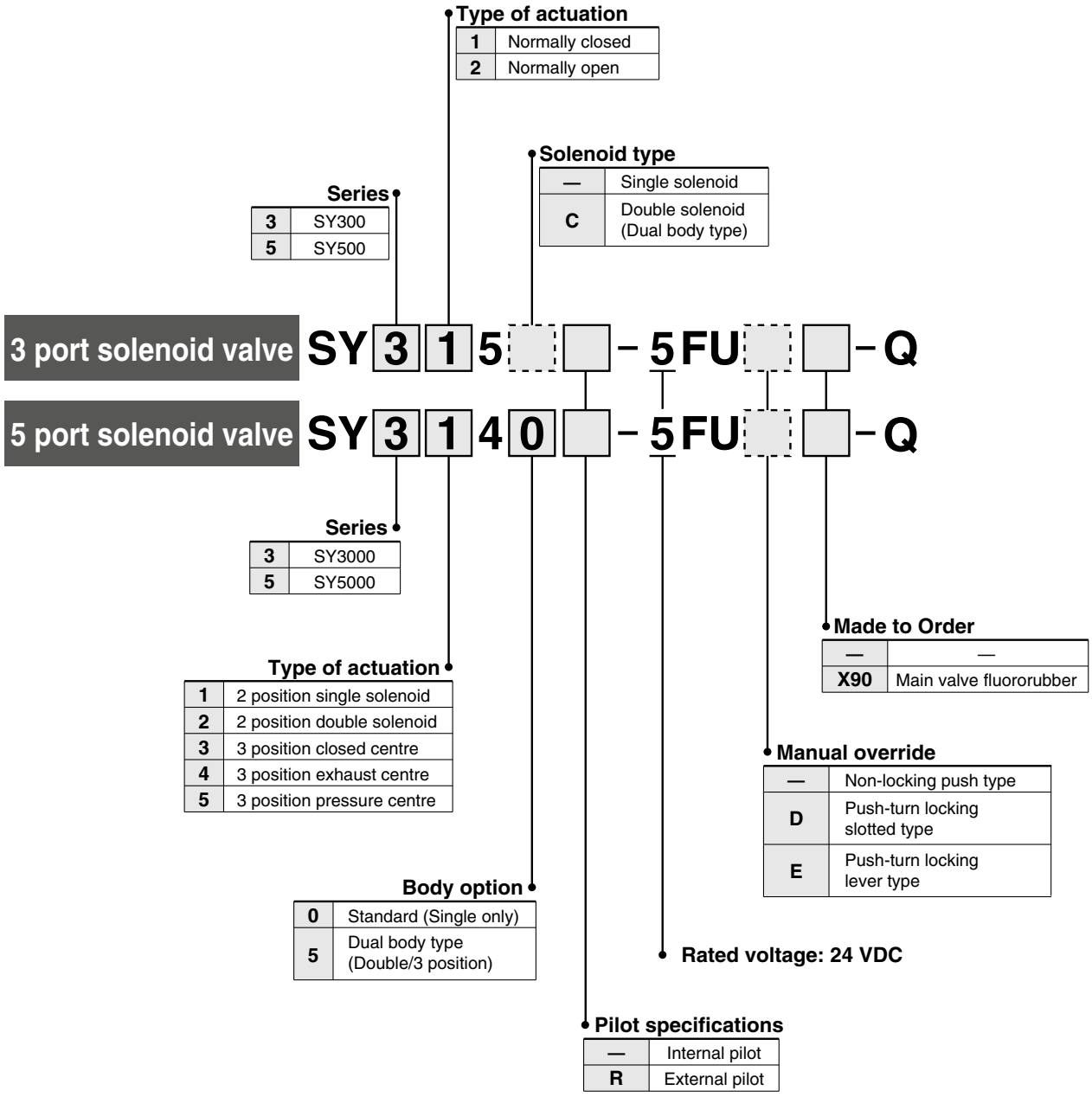

∗ When ordering plug-in type solenoid valve as a single unit, gaskets are not included. Order them separately, if necessary.
∗ With light/surge voltage suppressor (Non-polar type)

Dimensions

SS5Y3-45S6B ☐ D- Stations U- C4, N3 / C6, N7

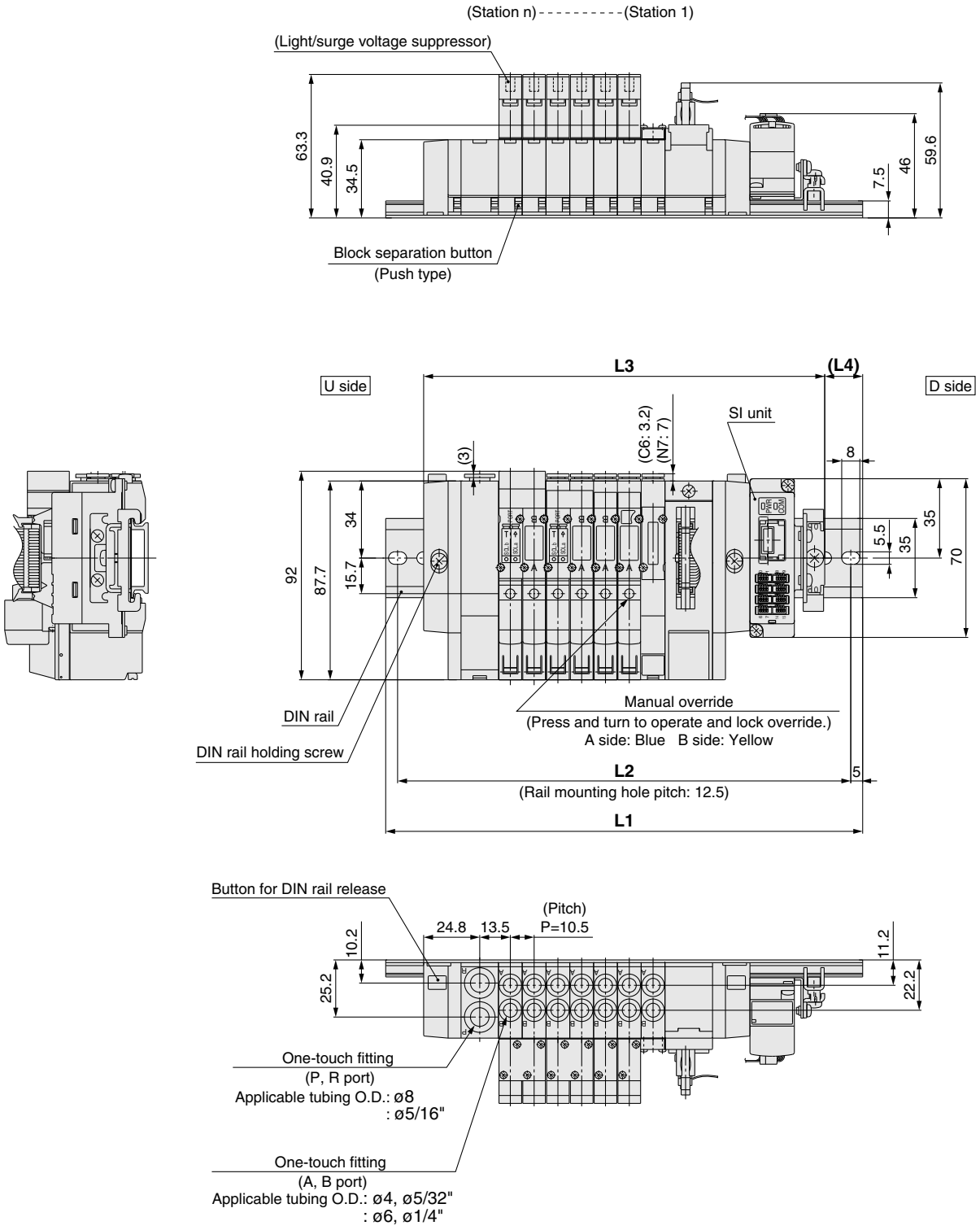

L: Dimensions n: Stations

L \ n	2	3	4	5	6	7	8	9	10
L1	148	160.5	173	185.5	198	210.5	223	223	235.5
L2	137.5	150	162.5	175	187.5	200	212.5	212.5	225
L3	124.5	135	145.5	156	166.5	177	187.5	198	208.5
L4	12	13	14	15	16	17	18	12.5	13.5

Dimensions

SS5Y3-45S6B ☐ U- Stations B- C4, N3 / C6, N7

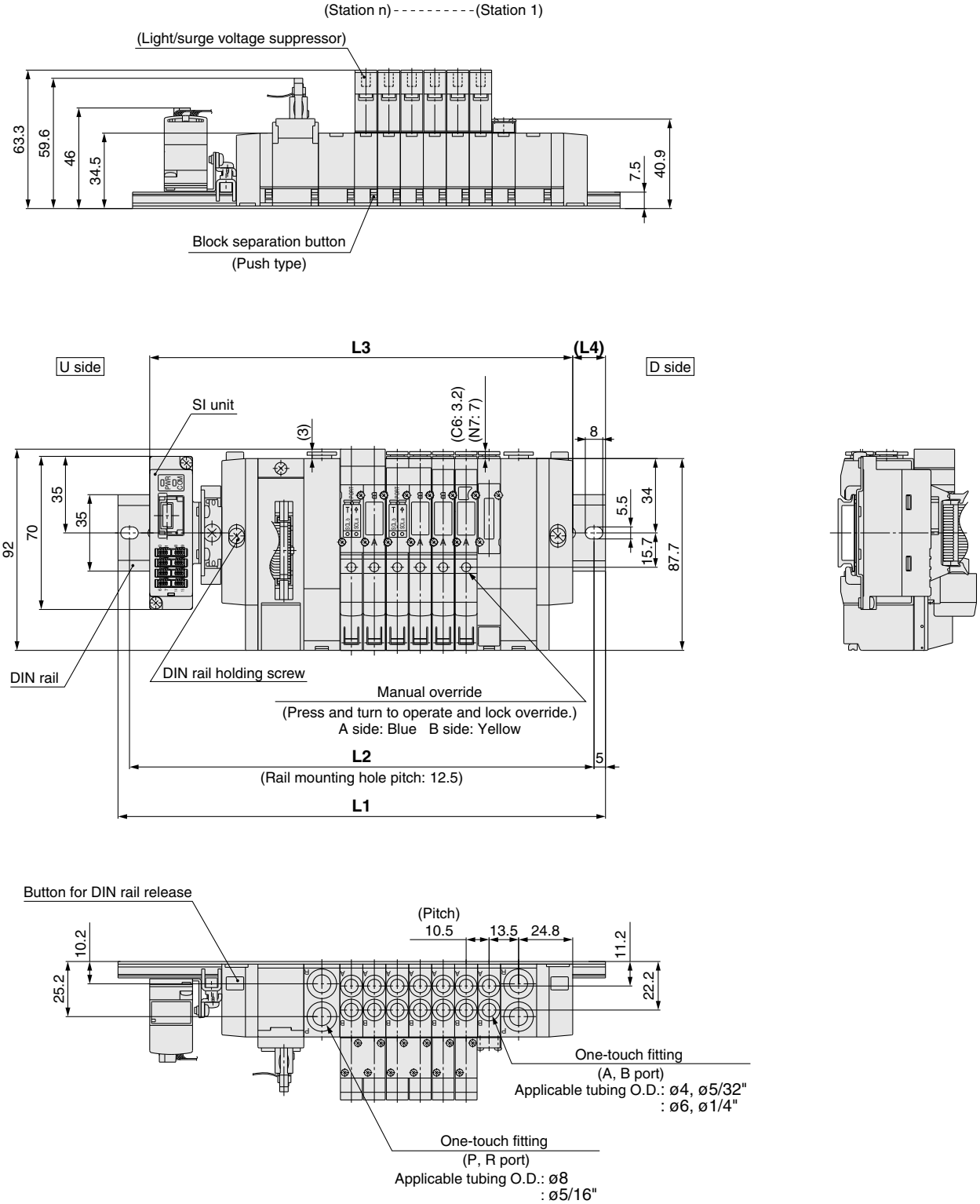

L: Dimensions

n: Stations

L \ n	2	3	4	5	6	7	8	9	10	11	12	13	14	15	16
L1	173	185.5	198	198	210.5	223	235.5	248	260.5	273	273	285.5	298	310.5	323
L2	162.5	175	187.5	187.5	200	212.5	225	237.5	250	262.5	262.5	275	287.5	300	312.5
L3	141	151.5	162	172.5	183	193.5	204	214.5	225	235.5	246	256.5	267	277.5	288
L4	16	17	18	13	14	15	16	17	18	19	13.5	14.5	15.5	16.5	17.5

Dimensions

SS5Y5-45S6B ☐ D- Stations U- C4, N3 / C6, N7 / C8, N9

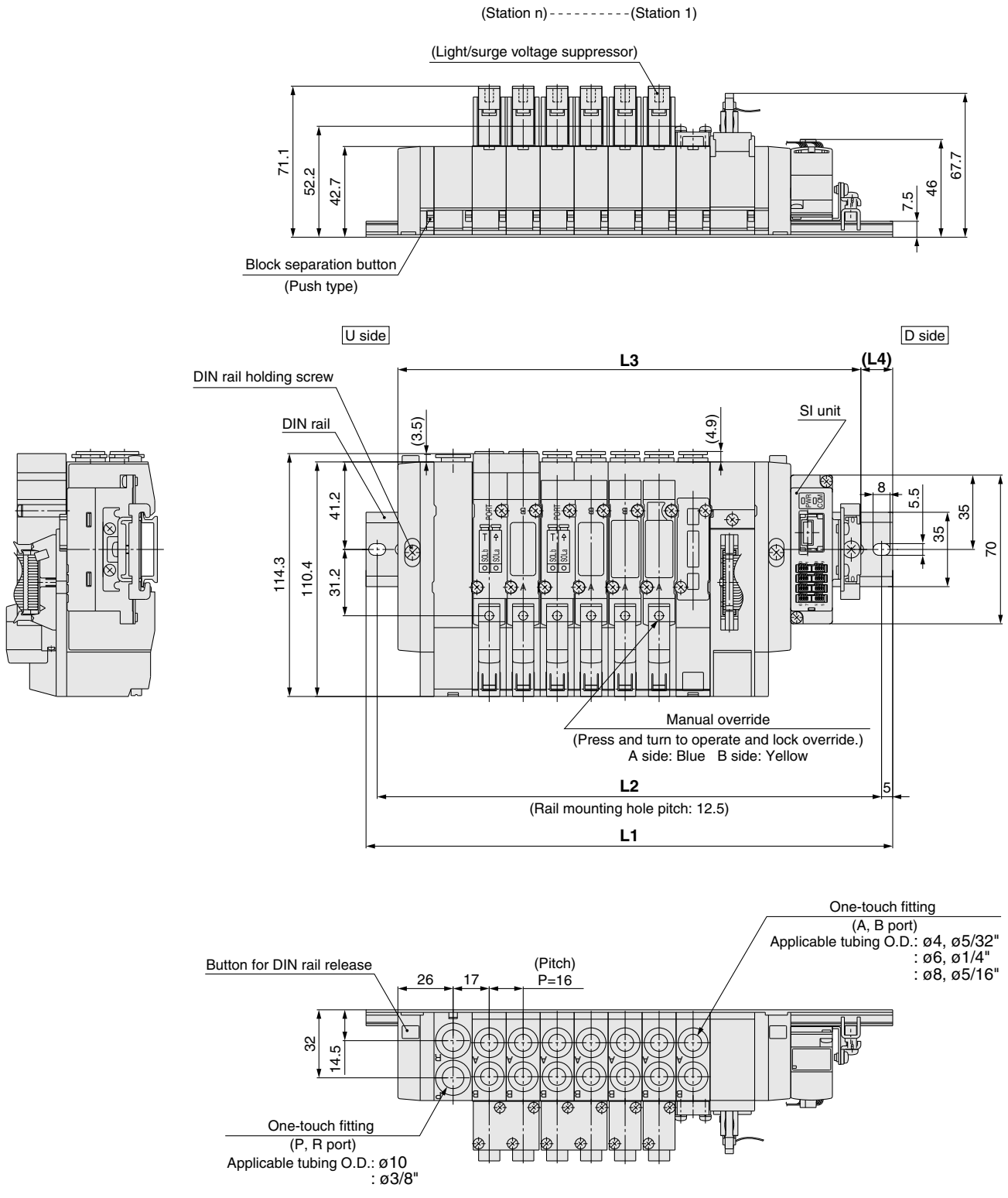

L: Dimensions n: Stations

L \ n	2	3	4	5	6	7	8	9	10
L1	173	185.5	198	210.5	235.5	248	260.5	285.5	298
L2	162.5	175	187.5	200	225	237.5	250	275	287.5
L3	138	154	170	186	202	218	234	250	266
L4	17.5	16	14	12.5	17	15	13.5	18	16

Manifold Option

▪ Blanking plate assembly

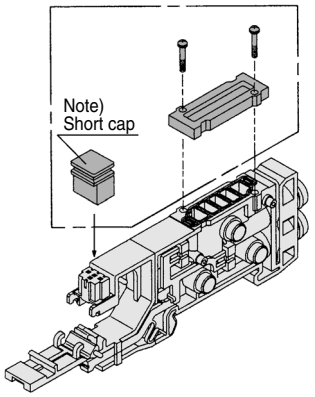

Series	Assembly part no.
SY3000	SX3000-75-2A-Q
SY5000	SX5000-76-6A-Q

Note) • When mounting blanking plate, be sure to mount a short cap.
• Two stations are necessary for the double, 3 position (Dual body type).

▪ SUP blocking disk

By installing a SUP blocking disk in the pressure supply passage of a manifold valve, it is possible to supply two or more different high and low pressures to one manifold.



Series	Part no.
SY3000	SX3000-77-1A
SY5000	SX5000-77-1A

▪ EXH blocking disk

By installing an EXH blocking disk in the exhaust passage of a manifold valve, it is possible to divide the valve's exhaust so that it does not affect another valve. (Two blocking disks are needed to divide both exhausts.)



Series	Part no.
SY3000	SX3000-77-1A
SY5000	SX5000-77-1A

▪ Label for block disk

The labels shown below are used on manifold stations containing SUP/EXH block disk(s) to show their location. (3 pcs. each)

VZ3000-123-1A (In common with SY3000, 5000)

Label for SUP block disk | Label for EXH block disk | Label for SUP/EXH block disk

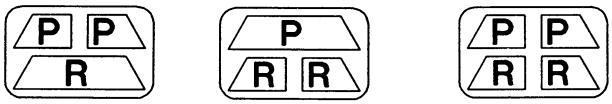

Note) When a block disk is concurrently ordered by specifying on the manifold specification sheet, etc., a label will be stuck on the position where block disk is mounted.

▪ Silencer with One-touch fitting

The silencer plugs directly into the One-touch fittings of the manifold.

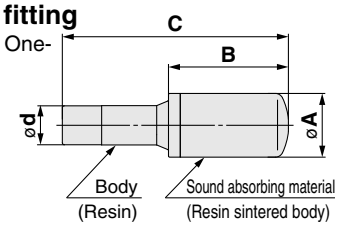

Series	Model	Effective area mm²	A	B	C
For SY3000 (ø8)	AN15-C08	20	ø13	20	45
For SY5000 (ø10)	AN20-C10	30	ø16.5	30.5	57.5

▪ Plug

These are inserted in unused cylinder ports and SUP, EXH ports. Purchasing order is available in units of 10 pieces.

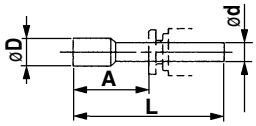

Dimensions

Applicable fittings size ø**d**	Model	**A**	**L**	**D**
4	**KQ2P-04**	16	32	6
6	**KQ2P-06**	18	35	8
8	**KQ2P-08**	20.5	39	10
10	**KQ2P-10**	22	43	12
1/8"	**KQ2P-01**	16	31.5	5
5/32"	**KQ2P-03**	16	32	6
1/4"	**KQ2P-07**	18	35	8.5
5/16"	**KQ2P-09**	20.5	39	10

⚠ Caution

Mounting screw tightening torques

M2: 0.16 N·m
M3: 0.8 N·m
M4: 1.4 N·m

▪ Individual EXH spacer assembly

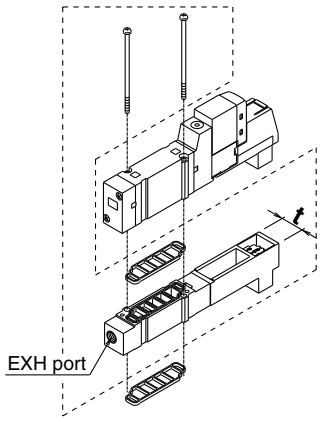

Series	Assembly part no.	Port no.	t
SY3000	SY3000-39-3A-Q	M5 x 0.8	11
SY5000	SY5000-39-17A-Q	1/8	15

Note) Please be careful because the dual body type (double solenoid, 3-position) requires two pieces. In this case, the exhaust is performed in the direction of the arrow mark indicated on the valve surface.

▪ Individual SUP spacer assembly

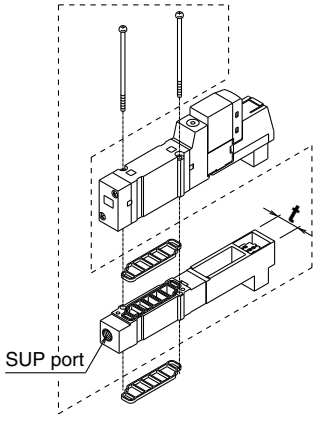

Series	Assembly part no.	Port no.	t
SY3000	SY3000-38-3A-Q	M5 x 0.8	11
SY5000	SY5000-38-17A-Q	1/8	15

Note) Please be careful because the dual body type (double solenoid, 3-position) requires two pieces. In this case, both supply ports require the piping.

3 Port Valve
Series SY300/500

Mixed Mounting Type on 5 Port Valve Manifold

3 port valve can be mounted on manifold for 5 port valve.

Applications

Possible to be mounted on all kinds of manifolds for Series SY3000/5000.
Refer to “How to Order Manifold” for the details.

How to Order Valve Manifold Assembly (Example)

Example

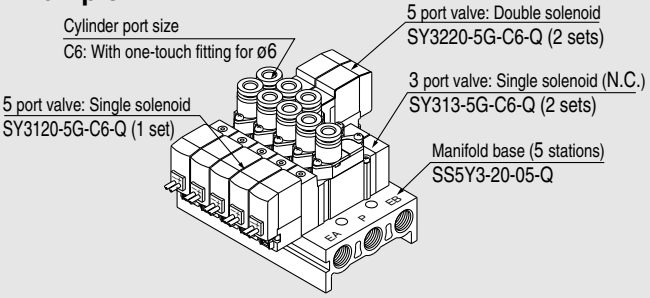

	SS5Y3-20-05-Q	**1 set (Type 20, 5 station manifold base part no.)**
*	**SY313-5G-C6-Q**	**2 sets (3 port valve, type NC part no.)**
*	**SY3120-5G-C6-Q**	**1 set (5 port valve, single solenoid part no.)**
*	**SY3220-5G-C6-Q**	**2 sets (5 port valve, double solenoid part no.)**

→ The asterisk denotes the symbol for assembly.
Prefix it to the part nos. of the solenoid valve, etc.

Add the valve and option part number under the manifold base part number. In the case of complex arrangement, specify them on the manifold specification sheet.

Body Ported/How to Order Valve

(Details→P.632)

Individual Wiring: For SS5Y$^{3}_{5}$-20

SY 5 1 3 □ □ – 5 L □ □ – 01 □ – □ – □ -Q

Series

3	SY300
5	SY500

Type of actuation

1	Normally closed (N.C.)
2	Normally open (N.O.)

Solenoid type

-	Single solenoid
D	Double solenoid

Coil specifications

-	Standard
T	With power saving circuit (24 VDC, 12 VDC only)

∗ Power saving circuit is not available in the case of D, DO or W□ type.

Rated voltage

For DC		For AC	
5	24 VDC	1	100 VAC
6	12 VDC	2	200 VAC
V	6 VDC	3	110 VAC [115 VAC]
S	5 VDC	4	220 VAC [230 VAC]
R	3 VDC		

∗ DC specifications of Type D and DO is only available with 12 and 24 VDC.
∗ AC specification is only available with D and DO type.

Electrical entry

24, 12, 6, 5, 3 VDC			24, 12 VDC/ 100, 110, 200, 220 VAC	24, 12, 6, 5, 3 VDC
Grommet	L plug connector	M plug connector	DIN terminal (SY5000 only)	M8 connector ∗
G: Lead wire length 300 mm H: Lead wire length 600 mm	L: With lead wire (Length 300 mm) LN: Without lead wire LO: Without connector	M: With lead wire (Length 300 mm) MN: Without lead wire MO: Without connector	D: With connector DO: Without connector	WO: Without connector cable W□: With connector cable Note 1)

∗ LN, MN type: with 2 sockets.
∗ For DIN terminal of SY300 series, refer to page 228.
∗ DIN terminal type "Y" which conforms to EN-175301-803C (former DIN43650C) is also available. For details, refer to page 227.
∗ For connector cable of M8 connector, refer to page 230.
∗ Connector M8 type "WA" conforming to IEC 60947-5-2 standard, is also available. For details, see page 211.
Note 1) Enter the cable length symbols in □. Please be sure to fill in the blank referring to page 231.

Note) When placing an order for body ported solenoid valve as a single unit, mounting bolt for manifold and gasket are not attached. Order them separately, if necessary.
(For details, refer to page 56.)

Thread type

-	Rc
F	G
N	NPT
T	NPTF

∗ Except for M5

Made to Order

—	—
X20	Body ported external pilot
X90	Main valve fluororubber

Bracket

—	Without bracket
F1	With foot bracket (Single solenoid type only)
F2	With side bracket

∗ Brackets are the same as the SY3000/5000 series.
∗ For bracket pin number, refer to page 5.

A port size

Thread piping

Symbol	Port size	Applicable series
M5	M5	SY300
01	1/8	SY500

One-touch fitting (Metric size)

Symbol	Port size	Applicable series
C4	One-touch fitting for ø4	SY300
C6	One-touch fitting for ø6	
C6	One-touch fitting for ø6	SY500
C8	One-touch fitting for ø8	

One-touch fitting (Inch size)

Symbol	Port size	Applicable series
N3	One-touch fitting for ø5/32"	SY300
N7	One-touch fitting for ø1/4"	
N7	One-touch fitting for ø1/4"	SY500
N9	One-touch fitting for ø5/16"	

Manual override

-	Non-locking push type
D	Push-turn locking slotted type
E	Push-turn locking lever type

Light/surge voltage suppressor

Electrical entry for G, H, L, M, W

-	Without light/surge voltage suppressor
S	With surge voltage suppressor
Z	With light/surge voltage suppressor
R	With surge voltage suppressor (Non-polar type)
U	With light/surge voltage suppressor (Non-polar type)

∗ Power saving circuit is only available in the "Z" type.

Electrical entry for D (SY500 only)

-	Without light/surge voltage suppressor
S	With surge voltage suppressor
Z	With light/surge voltage suppressor

∗ DOZ is not available.
∗ For AC voltage valves there is no "S" option. It is already built-in to the rectifier circuit.

Body Ported/How to Order Valve

Flat ribbon cable
EX510 Gateway-type serial transmission system: SS5Y$^{3}_{5}$-20P/20SA

A port size

Thread piping

Symbol	Port size	Applicable series
M5	M5	SY300
01	1/8	SY500

One-touch fitting (Metric size)

Symbol	Port size	Applicable series
C4	One-touch fitting for ø4	SY300
C6	One-touch fitting for ø6	SY300
C6	One-touch fitting for ø6	SY500
C8	One-touch fitting for ø8	SY500

One-touch fitting (Inch size)

Symbol	Port size	Applicable series
N3	One-touch fitting for ø5/32"	SY300
N7	One-touch fitting for ø1/4"	SY300
N7	One-touch fitting for ø1/4"	SY500
N9	One-touch fitting for ø5/16"	SY500

Light/surge voltage suppressor

Z	With light/surge voltage suppressor
U	With light/surge voltage suppressor (Non-polar type)

Note) Z: Positive common specifications only.

For DC: SY [5] [1] 3 [ ] — [5] LO [Z] [ ] — [ ] [ ] [ ] -Q

Series

3	SY300
5	SY500

Type of actuation

1	Normally closed (N.C.)
2	Normally open (N.O.)

Solenoid type

-	Single solenoid
D	Double solenoid

Rated voltage

5	24 VDC
6	12 VDC

Manual override

-	Non-locking push type
D	Push-turn locking slotted type
E	Push-turn locking lever type

Made to Order

—	—
X20	Body ported external pilot
X90	Main valve fluororubber

Thread type

-	Rc
F	G
N	NPT
T	NPTF

∗ Except for M5

Base Mounted/How to Order Valve

Individual wiring: For SS5Y$^{3}_{5}$-41/42/45

SY [5] [1] 5 [ ] [ ] [ ] — [5] [L] [ ] [ ] – [ ] [ ] – [ ] -Q

Series

3	SY300
5	SY500

Type of actuation

1	Normally closed (N.C.)
2	Normally open (N.O.)

Solenoid type

-	Single solenoid
D	Double solenoid

Pilot type

-	Internal pilot
R	External pilot

∗ External pilot is not available for Type 41 manifold.

Coil specifications

—	Standard
T	With power saving circuit (24 VDC, 12 VDC only)

∗ Power saving circuit is not available in the case of D, DO or W□ type.

Rated voltage

For DC

5	24 VDC
6	12 VDC
V	6 VDC
S	5 VDC
R	3 VDC

AC

1	100 VAC
2	200 VAC
3	110 VAC [115 VAC]
4	220 VAC [230 VAC]

∗ DC specifications of Type D, Y, DO and YO is only available with 12 and 24 VDC.
∗ For type W□, DC voltage is only available.
Note) AC-type models that are CE-compliant have DIN terminals only.

Manual override

—	Non-locking push type
D	Push-turn locking slotted type
E	Push-turn locking lever type

Port size

Symbol	Applicable series	
—	Without sub-plate	
01	With 1/8 sub-plate	SY300
02	With 1/4 sub-plate	SY500

∗ Sub-plates are the same as the SY3000/5000 series.

Light/Surge voltage suppressor

Electrical entry for G, H, L, M, W

—	Without light/surge voltage suppressor
S	With surge voltage suppressor
Z	With light/surge voltage suppressor
R	With surge voltage suppressor (Non-polar type)
U	With light/surge voltage suppressor (Non-polar type)

∗ For AC voltage valves there is no "S" option. It is already built-in to the rectifier circuit.
∗ For "R" and "U", DC voltage is only available.
∗ Power saving circuit is only available in the "Z" type.

Electrical entry for D, Y (SY500 only)

—	Without light/surge voltage suppressor
S	With surge voltage suppressor
Z	With light/surge voltage suppressor

∗ DOZ and YOZ are not available.
∗ For AC voltage valves there is no "S" option. It is already built-in to the rectifier circuit.

Made to Order

—	—
X90	Main valve fluororubber

Electrical entry

24, 12, 6, 5, 3 VDC			24, 12 VDC/ 100, 110, 200, 220 VAC	24, 12, 6, 5, 3 VDC
Grommet	L plug connector	M plug connector	DIN terminal (SY5000 only)	M8 connector ∗
G: Lead wire length 300 mm H: Lead wire length 600 mm	L: With lead wire (Length 300 mm) LN: Without lead wire LO: Without connector	M: With lead wire (Length 300 mm) MN: Without lead wire MO: Without connector	D: With connector DO: Without connector	WO: Without connector cable W□: With connector cable Note 1)

Tread type

—	Rc
F	G
N	NPT
T	NPTF

Note) With sub-plate only

∗ LN, MN type: with 2 sockets.
∗ For DIN terminal of SY300 series, refer to page 228.
∗ DIN terminal type "Y" which conforms to EN-175301-803C (former DIN43650C) is also available. For details, refer to page 227.
∗ For connector cable of M8 connector, refer to page 230.
∗ Connector M8 type "WA" conforming to IEC 60947-5-2 standard, is also available. For details, see page 211.
Note 1) Enter the cable length symbols in □. Please be sure to fill in the blank referring to page 231.

Base Mounted/How to Order Valve

Flat ribbon cable:
Connector box type: **For SS5Y$^{3}_{5}$-41P/42P/45-A**

41P/42P 45-A **For DC: SY** 5 1 5 □ □ — 5 LO Z □ □ -Q

Rated voltage

5	24 VDC
6	12 VDC

Light/surge voltage suppressor

Z	With light/surge voltage suppressor
U	With light/surge voltage suppressor (Non-polar type)

Note) Z: Positive common specifications only.

Made to Order

—	—
X90	Main valve fluororubber

Series

3	SY300
5	SY500

Type of actuation

1	Normally closed (N.C.)
2	Normally open (N.O.)

Manual override

-	Non-locking push type
D	Push-turn locking slotted type
E	Push-turn locking lever type

Solenoid type

-	Single solenoid
D	Double solenoid

Pilot type

-	Internal pilot
R	External pilot

* External pilot is not available for Type 41P manifold.

Plug-in: For SS5Y$^{3}_{5}$-45□

Single solenoid: SY 5 1 5 □ — 5 FU □ □ -Q

Double solenoid: SY 5 1 5C □ — 5 FU □ □ -Q

Series

3	SY300
5	SY500

Type of actuation

1	Normally closed (N.C.)
2	Normally open (N.O.)

Dual body type

* When ordering double solenoid valves (Dual body type), please keep in mind that they require two manifold stations.

Made to Order

—	—
X90	Main valve fluororubber

Manual override

-	Non-locking push type
D	Push-turn locking slotted type
E	Push-turn locking lever type

Rated voltage

For DC

5	24 VDC
6	12 VDC

Pilot type

-	Internal pilot
R	External pilot

Construction: Body ported

JIS Symbol
Single

Normally closed (N.C.)
Single solenoid

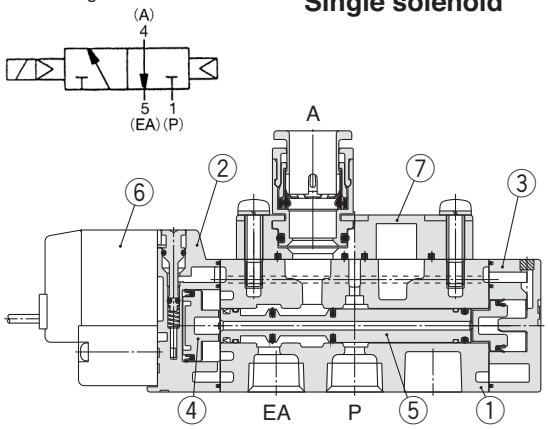

JIS Symbol
Double

Normally closed (N.C.)
Double solenoid

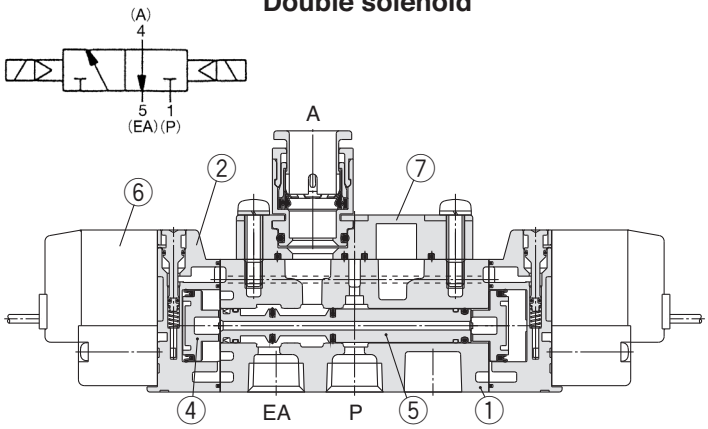

JIS Symbol
Single

Normally open (N.O.)
Single solenoid

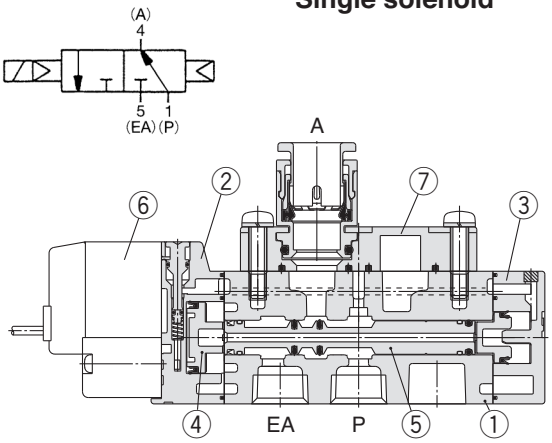

JIS Symbol
Double

Normally open (N.O.)
Double solenoid

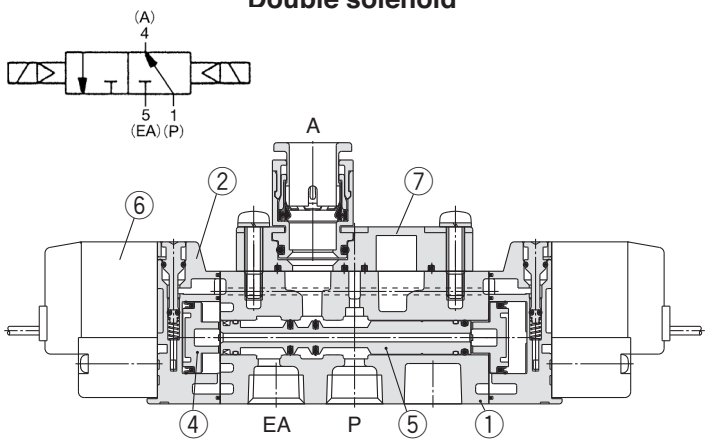

Component Parts

No.	Description	Material	Note
1	Body	Aluminum die-casted (SY3000: Zinc die-casted)	White
2	Adapter plate	Resin	White
3	End plate	Resin	White
4	Piston	Resin	–
5	Spool valve assembly	Aluminum, H-NBR	–

Replacement Parts

No.	Description	No.
6	Pilot valve assembly	Refer to "How to Order Pilot Valve Assembly" on page 218.
7	M5 port block assembly	Refer to "How to Order Port Block Assembly" below.

How to Order M5 Port Block Assembly

SY □ 00 — 2A — □ □

Series

3	Series SY300
5	Series SY500

Thread type

-	Rc
F	G
N	NPT
T	NPTF

∗ Except for M5

A, B port size

Thread piping

Symbol	Port size	Applicable series
M5	M5	SY300
01	1/8	SY500

One-touch fitting (Metric size)

Symbol	Port size	Applicable series
C4	One-touch fitting for ø4	SY300
C6	One-touch fitting for ø6	
C4	One-touch fitting for ø4	SY500
C6	One-touch fitting for ø6	
C8	One-touch fitting for ø8	

One-touch fitting (Inch size)

Symbol	Port size	Applicable series
N3	One-touch fitting for ø5/32"	SY300
N7	One-touch fitting for ø1/4"	
N3	One-touch fitting for ø5/32"	SY500
N7	One-touch fitting for ø1/4"	
N9	One-touch fitting for ø5/16"	

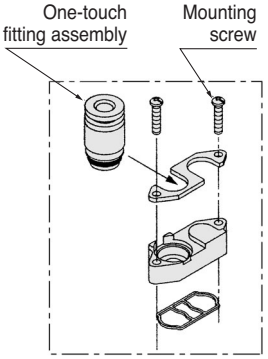

∗ Only replacement of the fittings assembly is possible.

Metric size

SY300	One-touch fitting for ø4	VVQ1000-50A-C4
	One-touch fitting for ø6	VVQ1000-50A-C6
SY500	One-touch fitting for ø4	VVQ1000-51A-C4
	One-touch fitting for ø6	VVQ1000-51A-C6
	One-touch fitting for ø8	VVQ1000-51A-C8

Inch size

SY300	One-touch fitting for ø5/32"	VVQ1000-50A-N3
	One-touch fitting for ø1/4"	VVQ1000-50A-N7
SY500	One-touch fitting for ø5/32"	VVQ1000-51A-N3
	One-touch fitting for ø1/4"	VVQ1000-51A-N7
	One-touch fitting for ø5/16"	VVQ1000-51A-N9

⚠ Caution

Mounting screw tightening torques

SY300 (M2) : 0.12 N·m
SY500 (M3) : 0.6 N·m

Construction: Base Mounted

Symbol
Single

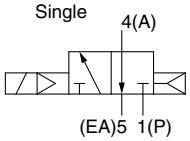

Normally closed (N.C.)
Single solenoid

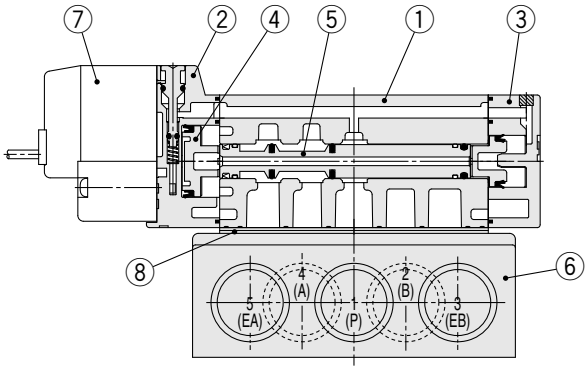

Symbol
Double

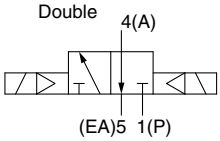

Normally closed (N.C.)
Double solenoid

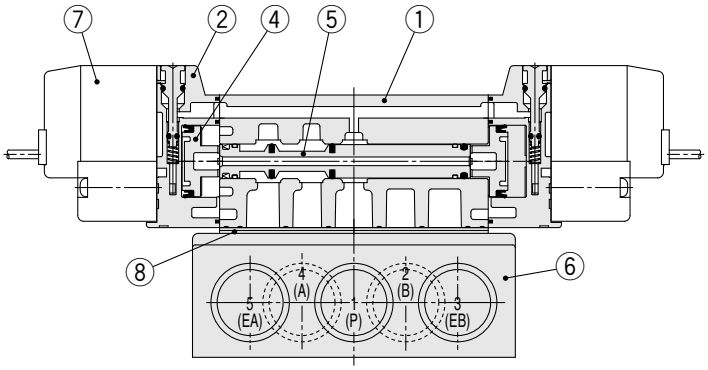

Symbol
Single

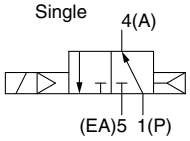

Normally open (N.O.)
Single solenoid

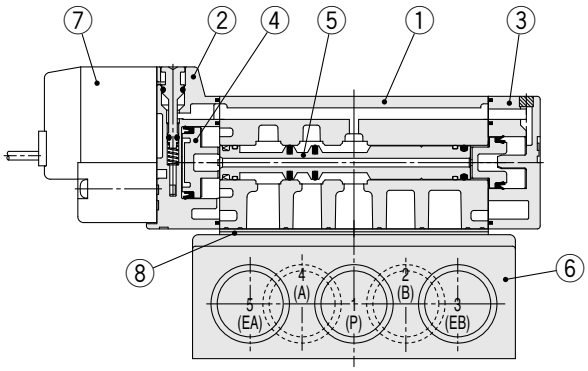

Symbol
Double

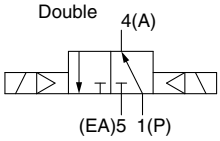

Normally open (N.O.)
Double solenoid

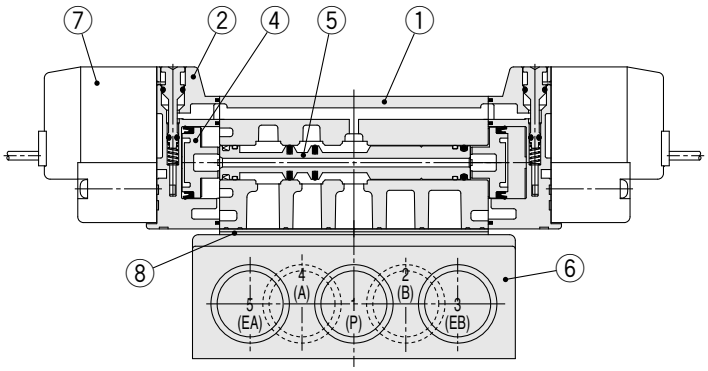

Component Parts

No.	Description	Material	Note
1	**Body**	Aluminium die-casted (SY3000: Zinc die-casted)	White
2	**Adapter plate**	Resin	White
3	**End plate**	Resin	White
4	**Piston**	Resin	—
5	**Spool valve assembly**	Aluminium, H-NBR	—

Replacement Parts

No.	Description		Part No. SY3□40	Part No. SY5□40	Part No. SY7□40	Note
6	**Sub-plate** Note)		SY3000-27-1✻	SY5000-27-1✻	1/4 :SY7000-27-1✻ 3/8 :SY7000-27-2✻	Aluminum die-casted
7	**Pilot valve assembly**		Refer to “How to Order Pilot Valve Assembly” on page 218.			
8	**Gasket**	**Standard**	SY3000-11-25	SY5000-11-15	SY7000-11-11	H-NBR
		CE-compliant	SY3000-11-25	SY5000-11-18	SY7000-11-14	
—	Round head combination screw		SY3000-23-4	AC00077	AC00296	For valve mounting (Matt nickel plated)
	Reference screw size		(M2 x 21)	(M3 x 26)	(M4 x 31)	

✻ Thread type

⚠ Caution

Mounting screw tightening torques

M2: 0.16 N·m
M3: 0.8 N·m
M4: 1.4 N·m

Weight

Body ported

SY300 series

Valve model	Type of actuation	Weight (g)	
		Grommet	L, M plug connector
SY3□3-□□-M5	Single	51	53
	Double	68	74
SY3□3-□□-C4 / N3	Single	56	59
	Double	74	79
SY3□3-□□-C6 / N7	Single	54	57
	Double	72	77

SY500 series

Valve model	Type of actuation	Weight (g)		
		Grommet	L, M plug connector	DIN terminal
SY5□3-□-01□	Single	69	72	93
	Double	87	93	135
SY5□3-□-C4 / N3	Single	82	82	103
	Double	100	102	144
SY5□3-□-C6 / N7	Single	79	77	98
	Double	97	98	140
SY5□3-□-C8 / N9	Single	75	84	105
	Double	93	105	147

Base mounted

SY300 series

Valve model	Type of actuation	Note) Weight (g)	
		Grommet	L, M plug connector
SY3□5-□□	Single	47(82)	50(85)
	Double	65(100)	70(105)

Note) The values shown in ( ) are for values with sub-plate.

SY500 series

Valve model	Type of actuation	Note) Weight (g)		
		Grommet	L, M plug connector	DIN terminal
SY5□5-□□	Single	55(118)	58(121)	79(142)
	Double	73(136)	78(141)	120(183)

Note) The values shown in ( ) are for values with sub-plate.

5 Port Solenoid Valve
Series SY3000/5000
Made to Order
External Pilot/Built-in Silencer

Type 45

External pilot manifold bases for low-pressure/vacuum use are added to split style/DIN rail manifolds.
The built-in silencer has materialised a clear-cut appearance.

Individual Wiring/Connector Box Type

How to Order Manifold

Type 45

SS5Y$^{3}_{5}$-45(-A)-[05][U][R]-[C6]-[ ]-Q

Series

3	SY3000
5	SY5000

Valve stations

Symbol	Stations
02	2 stations
⋮	⋮
20	20 stations

The number of blanking plate assembly is included.

SUP/EXH block assembly mounting position

Symbol	Mounting position	Stations
U	U side	2 to 10 stations
D	D side	
B	Both sides	2 to 20 stations
M	Special specifications	

∗ For special specifications, indicate separately by the manifold specification

Option

When a longer DIN rail is desired than the specified stations, specify the station number to be required. (Max. 20 stations)

SUP/EXH block assembly specifications

Symbol	Specifications
R	External pilot specifications
S	Internal pilot/Built-in silencer
RS	External pilot/Built-in silencer

A, B port size

One-touch fitting (Metric size)

Symbol	Port size	Applicable series
C4	One-touch fitting for ø4	SY3000
C6	One-touch fitting for ø6	
M	Mixed	
C4	One-touch fitting for ø4	SY5000
C6	One-touch fitting for ø6	
C8	One-touch fitting for ø8	
M	Mixed	

One-touch fitting (Inch size)

Symbol	Port size	Applicable series
N3	One-touch fitting for ø5/32"	SY3000
N7	One-touch fitting for ø1/4"	
M	Mixed	
N3	One-touch fitting for ø5/32"	SY5000
N7	One-touch fitting for ø1/4"	
N9	One-touch fitting for ø5/16"	
M	Mixed	

∗ In the case of mixed specifications, indicate separately on the manifold specification sheet.

How to Order Valve Manifold Assembly (Example)

Example

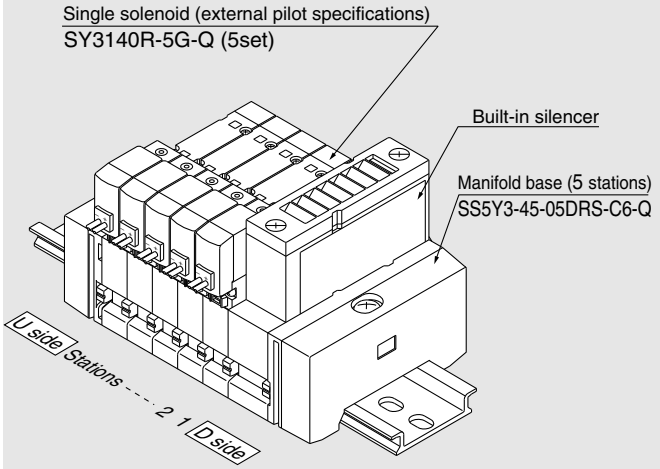

SS5Y3-45-05DRS-C6-Q **1 set (External pilot specification with built-in silencer part no.)**
∗ **SY3140R-5G-Q** **5 sets (Single solenoid part no.)**
→ The asterisk denotes the symbol for assembly.
Prefix it to the part nos. of the solenoid valve, etc.

The valve arrangement is numbered as the 1st. station from D side regardless of the mounting position of SUP/EXH block assembly. In ordering, specify the part nos. in the order from the 1st. station on D side. Besides, when the arrangement will be complicated, fill out the manifold specification sheet to instruct us.
For manifolds with SUP/EXH block assembly at each end of the manifold, external pilot ports and silencers will be also located at each end of the manifold.
The SUP/EXH block assembly (SX3/5000_51_1A), for special usage, as shown on page 125, can also be mounted. Please specify the mounting position, by correctly filling in the blank space on the manifold specification sheet.

How to Order Valve

SY [5] [2] 40 [ ] [ ] – [5] [L] [ ] [ ] -Q

Series

3	SY3000
5	SY5000

Type of actuation

1	2 position single
2	2 position double
3	3 position closed center
4	3 position exhaust center
5	3 position pressure center

Pilot type

-	Internal pilot
R	External pilot

Coil specifications

-	Standard
T	With power saving circuit (24 VDC, 12 VDC only)

∗ Power saving circuit is not available in the case of D, DO or W□ type.

Rated voltage

For DC

5	24 VDC
6	12 VDC
V	6 VDC
S	5 VDC
R	3 VDC

For AC (50/60 Hz)

1	100 VAC
2	200 VAC
3	110 VAC [115 VAC]
4	220 VAC [230 VAC]

∗ DC specifications of Type D and DO is only available with 12 and 24 VDC.
∗ AC specification is only available with D and DO type.
∗ D and DO only available

Light/surge voltage suppressor

Electrical entry for G, H, L, M, W

-	Without light/surge voltage suppressor
S	With surge voltage suppressor
Z	With light/surge voltage suppressor
R	With surge voltage suppressor (Non-polar type)
U	With light/surge voltage suppressor (Non-polar type)

∗ Power saving circuit is only available in the "Z" type.

Electrical entry for D (SY5000 only)

-	Without light/surge voltage suppressor
S	With surge voltage suppressor (Non-polar type)
Z	With light/surge voltage suppressor (Non-polar type)

∗ DOZ is not available.
∗ For AC voltage valves there is no "S" option. It is already built-in to the rectifier circuit.

Manual override

-	Non-locking push type
D	Push-turn locking slotted type
E	Push-turn locking lever type

Electrical entry

24, 12, 6, 5, 3 VDC			24, 12 VDC/ 100, 110, 200, 220 VAC	24, 12, 6, 5, 3 VDC
Grommet	**L plug connector**	**M plug connector**	**DIN terminal**	**M8 connector** ∗
G: Lead wire length 300 mm **H:** Lead wire length 600 mm	**L:** With lead wire (Length 300 mm) **LN:** Without lead wire **LO:** Without connector	**M:** With lead wire (Length 300 mm) **MN:** Without lead wire	**(SY5000 only)** **D:** With connector **DO:** Without connector	**WO:** Without connector cable **W□:** With connector cable Note 1)

∗ LN, MN type: with 2 sockets.
∗ D and DO only available for SY5000.
∗ DIN terminal type "Y" which conforms to EN-175301-803C (former DIN43650C) is also available. For details, refer to page 227.
∗ Setting "-5LOU" is available only for connector box type.
∗ For connector cable of M8 connector, refer to page 230.
∗ Connector M8 type "WA" conforming to IEC 60947-5-2 standard, is also available. For details, see page 211.
Note 1) Enter the cable length symbols in □. Please be sure to fill in the blank referring to back page 231.

Plug-in

How to Order Manifold

Type 45□

SS5Y3/5-45 □ F U 05 U R □ □ □ -Q

Series

3	SY3000
5	SY5000

Common specifications

-	Positive common
N	Negative common

No symbol is used for T, T1, S□ types.

Connector mounting position

Symbol	Mounting position
U	U side
D	D side

Connector type

Symbol	Mounting position
F	D-sub connector
P	Flat ribbon cable 26 pins
PG	Flat ribbon cable 20 pins
PH	Flat ribbon cable 10 pins
T	Terminal block 9 pins
T1	Terminal block 18 pins
S□	Serial Transmission Type

* For details, refer to page 135.

Valve stations

Symbol	Stations	Note
02	2 stations	Single wining spec.
⋮	⋮	
20	20 stations	

* This also includes the number of blanking plate assemblies.
* Depending on the connector, the number of stations is limited. Refer to page 138.
* Two stations are necessary for the double, 3 position solenoid valve (Dual body type).

SUP/EXH block assembly mounting position

Symbol	Mounting position	Stations
U	U side	2 to 10 stations
D	D side	
B	(Both sides)	2 to 20 stations
M	Special specifications	

* For special specifications, indicate separately by the manifold specification

SUP/EXH block assembly specifications

Symbol	Specifications
R	External pilot specifications
S	Internal pilot/Built-in silencer
RS	External pilot/Built-in silencer

A, B port size

One-touch fitting (Metric size)

Symbol	Port size	Applicable series
C4	One-touch fitting for ø4	SY3000
C6	One-touch fitting for ø6	
M	Mixed	
C4	One-touch fitting for ø4	SY5000
C6	One-touch fitting for ø6	
C8	One-touch fitting for ø8	
M	Mixed	

One-touch fitting (Inch size)

Symbol	Port size	Applicable series
N3	One-touch fitting for ø5/32"	SY3000
N7	One-touch fitting for ø1/4"	
M	Mixed	
N3	One-touch fitting for ø5/32"	SY5000
N7	One-touch fitting for ø1/4"	
N9	One-touch fitting for ø5/16"	
M	Mixed	

* In the case of mixed specifications, indicate separately on the manifold specification sheet.

Voltage

-	24 VDC
12V	12 VDC

No symbol is used for T, T1, S□ types.

Option

When a longer DIN rail is desired than the specified stations, specify the station number to be required. (20 stations at maximum)

How to Order Valve Manifold Assembly (Example)

Example

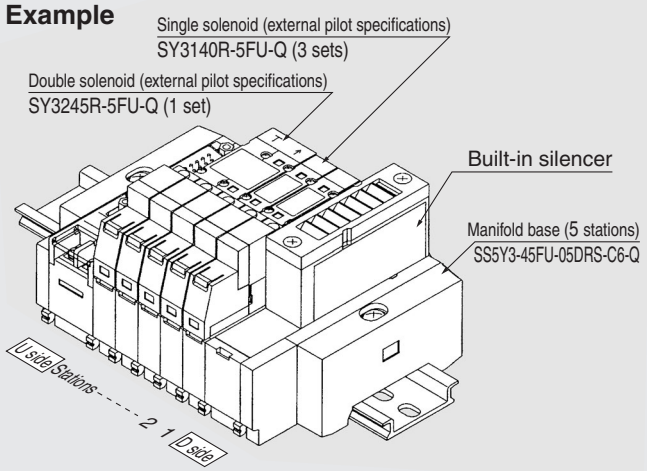

SS5Y3-45FU-05DRS-C6-Q 1 set (External pilot specification with built-in silencer part no.)
* **SY3140R-5FU-Q** 3 sets (Single solenoid part no.)
* **SY3245R-5FU-Q** 1 set (Double solenoid part no.)

→ The asterisk denotes the symbol for assembly. Prefix it to the part nos. of the solenoid valve, etc.

The valve arrangement is numbered as the 1st. station from D side regardless of the mounting position of SUP/EXH block assembly. In ordering, specify the part nos. in the order from the 1st. station on D side. Besides, when the arrangement will be complicated, fill out the manifold specification sheet to instruct us.
For manifolds with SUP/EXH block at each end of the manifold, external pilot ports and silencers will be also located at each end of the manifold.
The SUP/EXH block assembly (SX3/5000_51_1A), for special usage can also be mounted. Please specify the mounting position, by correctly filling in the blank space on the manifold specification sheet.
Two stations of the manifold base are necessary for the double, 3 position (Dual body type). Use caution when specifying the number of stations required for the manifold base.

How to Order Valve

SY 3 1 4 □ □ — 5 FU □ -Q

Series

3	SY3000
5	SY5000

Type of actuation

1	2 position single
2	2 position double
3	3 position closed center
4	3 position exhaust center
5	3 position pressure center

Body Option

0	Standard (Single only)
5	Dual body type (Double, 3 position)

Pilot type

-	Internal pilot
R	External pilot

Rated voltage

5	24 VDC
6	12 VDC
V*	6 VDC
S*	5 VDC
R*	3 VDC

* Mark: 45T and T1 only S□ type is available for 24 VDC only.

Manual override

-	Non-locking push type
D	Push-turn locking slotted type
E	Push-turn locking lever type

External Pilot/Built-in Silencer

SY3000: SS5Y3-45-[Stations] DRS-C4, N3 / C6, N7 -Q

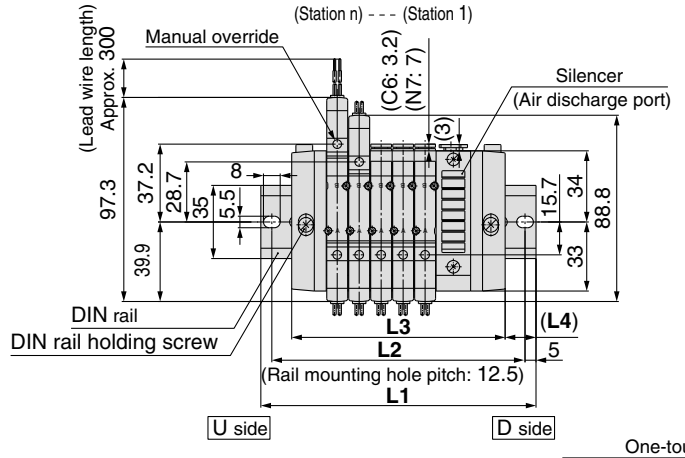

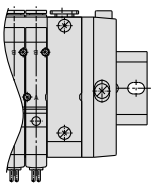



∗ The dimensions **L1** to **L4** are identical to those of **SS5Y3-45-[Stations] U/D/B -C4, N3 / C6, N7 -Q**.

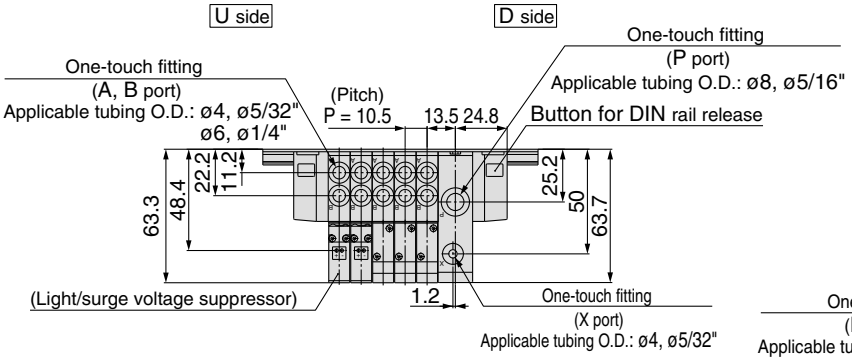

SS5Y3-45-[Stations] DR-C4, N3 / C6, N7 -Q

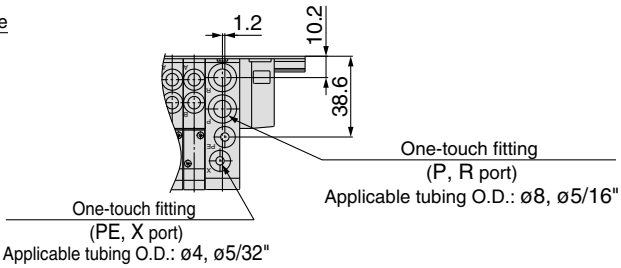

SY5000: SS5Y5-45-[Stations] DRS-C4, N3 / C6, N7 / C8, N9 -Q

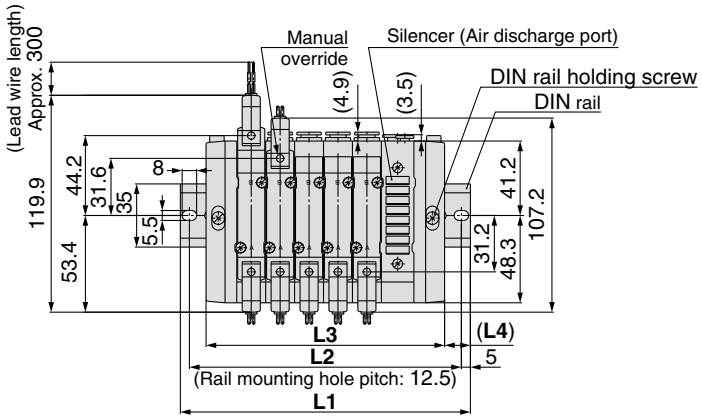

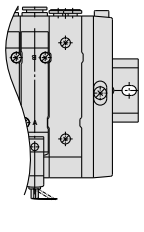



∗ The dimensions **L1** to **L4** are identical to those of **SS5Y3-45-[Stations] U/D/B -C4, N3 / C6, N7 / C8, N9-Q**.

∗ The dimensions of **SS5Y$^{3}_{5}$-45-[Stations] URS-Q** are identical to those of SS5Y$^{3}_{5}$-45F-[Stations] DRS-Q.

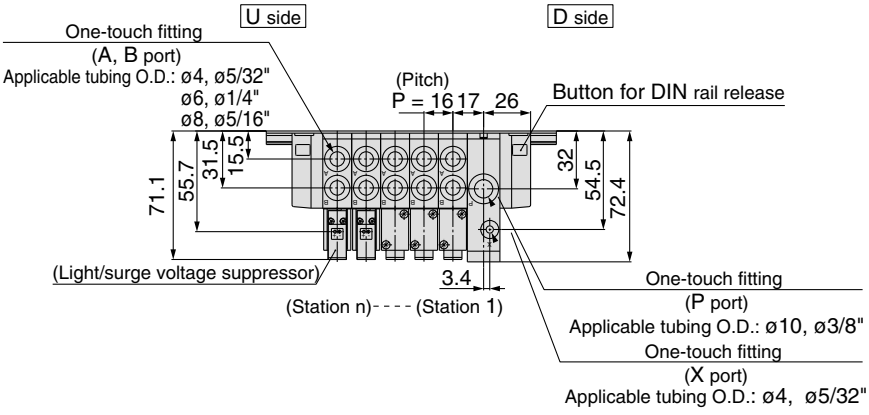

SS5Y5-45-[Stations] DR-C4, N3 / C6, N7 / C8, N9 -Q

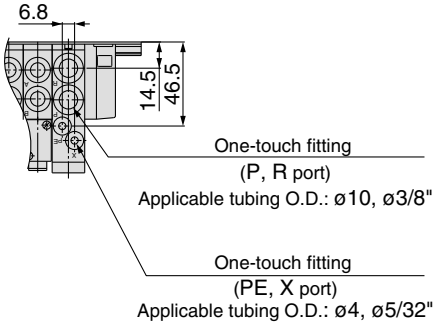

External Pilot/Built-in Silencer

SY3000: SS5Y3-45FU-[Stations]DRS-C4,N3 C6,N7 -Q

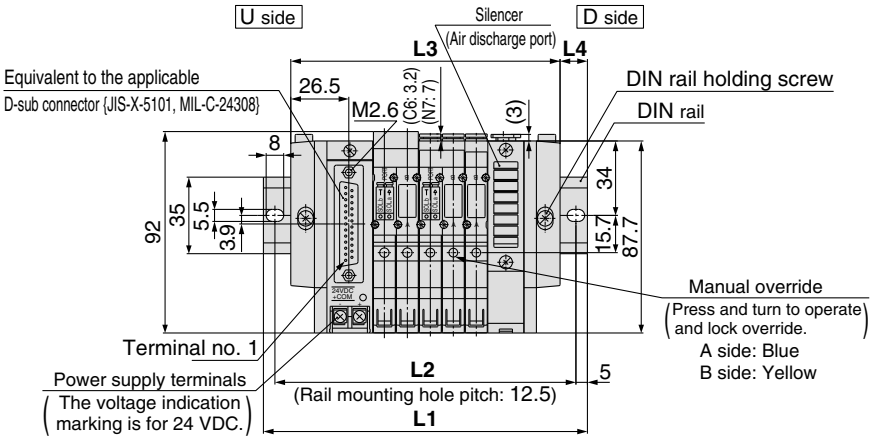

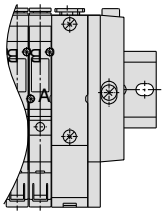

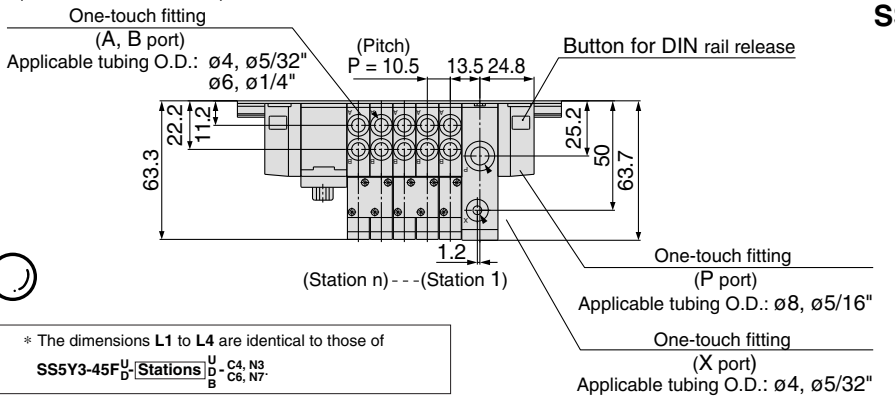

SS5Y3-45FU-[Stations]DR-C4,N3 C6,N7 -Q

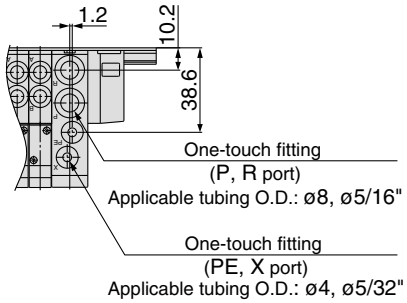

∗ The dimensions **L1** to **L4** are identical to those of **SS5Y3-45F$^{U}_{D}$-[Stations]$^{U}_{D}$-C4, N3 C6, N7**.

SY5000: SS5Y5-45FU-[Stations]DRS-C4,N3 C6,N7 C8,N9 -Q

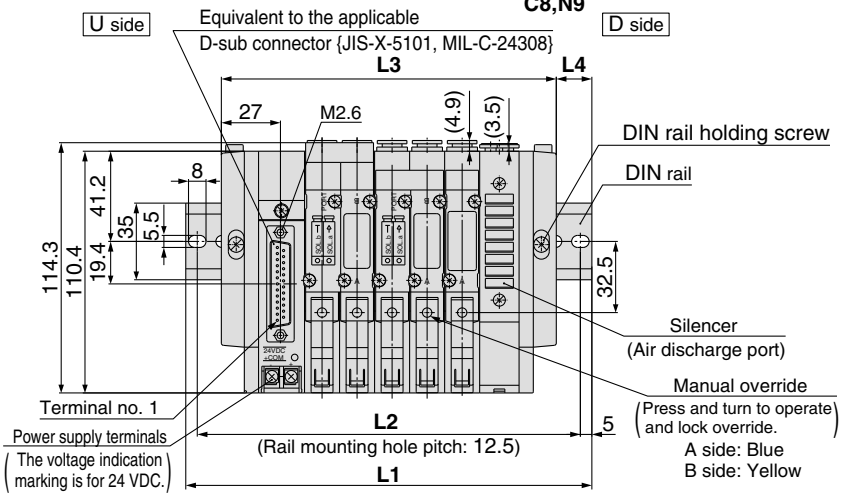

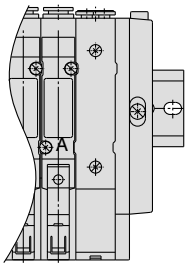

∗ The dimensions **L1** to **L4** are identical to those of **SS5Y3-45F$^{U}_{D}$-[Stations]$^{U}_{D}$-C4, N3 C6, N7 -Q C8, N9**

∗ The dimensions of **SS5Y$^{3}_{5}$-45-[Stations]URS-Q** are identical to those of SS5Y$^{3}_{5}$-45-[Stations]DRS-Q.

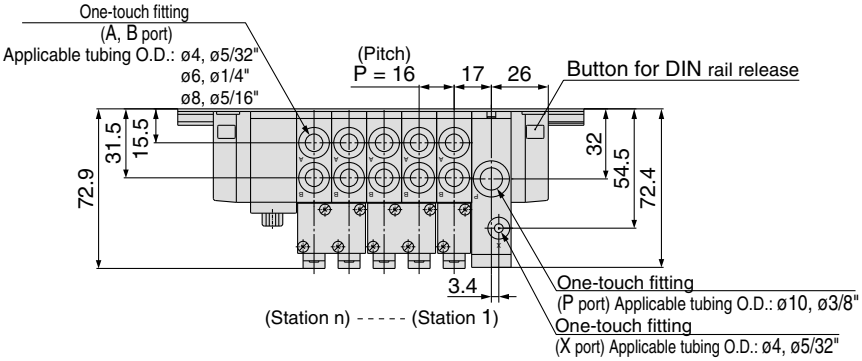

SS5Y5-45FU-[Stations]DR-C4,N3 C6,N7 C8,N9 -Q

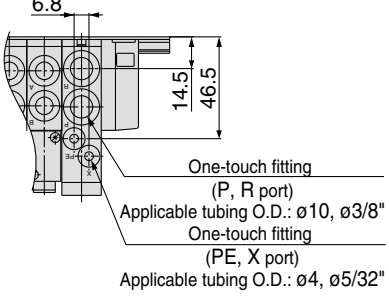

5 Port Solenoid Valve
Series SY3000/5000
Made to Order
Mixed Mounting Type

Type M45

Made to Order

Non plug-in

Use SY3000 together with SY5000, which has a large Cv and is mounted only in a place where it is needed, permits a selection of economic manifold bases.

How to Order Manifold

Type M45 (Mixed mounting style)

SS5Y5 − M45 − 05 U [ ] − C86 − [ ] -Q

Mixed mounting style

Valve stations

Symbol	Stations
02	2 stations
⋮	⋮
20	20 stations

The number of blanking plate ass'y is included, too.

SUP/EXH block assembly mounting position

Symbol	Mounting position	Stations
U	U side	2 to 10 stations
D	D side	
B	Both sides	2 to 20 stations
M	Special specifications	

∗ For special specifications, indicate separately by the manifold specification heet.

Option
When a longer DIN rail is desired than the specified stations, specify the station number to be required.
(Max. 20 stations)

SUP/EXH block assembly specifications

Symbol	Specifications
-	Standard/Internal pilot specifications
S	Built-in silencer

∗ External pilot specification is unavailable for mixed mounting style.

A, B port size

One-touch fitting (Metric size)

Symbol	Port size
C44	SY5000: One-touch fitting for ø4 SY3000: One-touch fitting for ø4
C46	SY5000: One-touch fitting for ø4 SY3000: One-touch fitting for ø6
C64	SY5000: One-touch fitting for ø6 SY3000: One-touch fitting for ø4
C66	SY5000: One-touch fitting for ø6 SY3000: One-touch fitting for ø6
C84	SY5000: One-touch fitting for ø8 SY3000: One-touch fitting for ø4
C86	SY5000: One-touch fitting for ø8 SY3000: One-touch fitting for ø6
M	Mixed

One-touch fitting (Inch size)

Symbol	Port size
N33	SY5000: One-touch fitting for ø5/32" SY3000: One-touch fitting for ø5/32"
N37	SY5000: One-touch fitting for ø5/32" SY3000: One-touch fitting for ø1/4"
N73	SY5000: One-touch fitting for ø1/4" SY3000: One-touch fitting for ø5/32"
N77	SY5000: One-touch fitting for ø1/4" SY3000: One-touch fitting for ø1/4"
N93	SY5000: One-touch fitting for ø5/16" SY3000: One-touch fitting for ø5/32"
N97	SY5000: One-touch fitting for ø5/16" SY3000: One-touch fitting for ø1/4"
M	Mixed

∗ In the case of mixed specifications, indicate separately on the manifold specification sheet.

How to Order Valve Manifold Assembly (Example)

Example

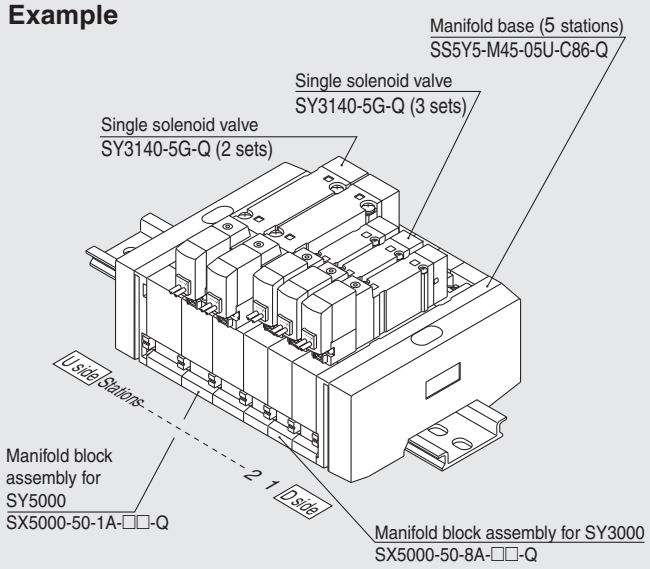

SS5Y5-M45-05U-C86-Q 1 set (Type M45, manifold base part no.)
∗ SY3140-5G-Q 3 sets (Single solenoid part no.)
∗ SY5140-5G-Q 2 sets (Single solenoid part no.)
→ The asterisk denotes the symbol for assembly. Prefix it to the part nos. of the solenoid valve, etc.

The valve arrangement is numbered as the 1st. station from D side regardless of the mounting position of SUP/EXH block assembly. In ordering, specify the part nos. in the order from the 1st. station on D side. Besides, when the arrangement will be complicated, fill out the manifold specification sheet to instruct us.

How to Order Valve

SY 5 2 40 [ ] − 5 L [ ] [ ] [ ] -Q

Series

3	SY3000
5	SY5000

Type of actuation

1	2 position single
2	2 position double
3	3 position closed center
4	3 position exhaust center
5	3 position pressure center

Coil specifications

-	Standard
T	With power saving circuit (24 VDC, 12 VDC only)

∗ Power saving circuit is not available in the case of W□ type.

Rated voltage

For DC

5	24 VDC
6	12 VDC
V	6 VDC
S	5 VDC
R	3 VDC

∗ For type W□, DC voltage is only available.

Electrical entry for G, H, L, M, W

-	Without light/surge voltage suppressor
S	With surge voltage suppressor
Z	With light/surge voltage suppressor
R	With surge voltage suppressor (Non-polar type)
U	With light/surge voltage suppressor (Non-polar type)

∗ Power saving circuit is only available in the "Z" type.

Manual override

-	Non-locking push type
D	Push-turn locking slotted type
E	Push-turn locking lever type

Made to Order

—	—
X90	Main valve fluororubber

Electrical entry

24, 12, 6, 5, 3 VDC			
Grommet	**L plug connector**	**M plug connector**	**M8 connector** ∗
G: Lead wire length 300 mm **H:** Lead wire length 600 mm	**L:** With lead wire (Length 300 mm) **LN:** Without lead wire **LO:** Without connector	**M:** With lead wire (Length 300 mm) **MN:** Without lead wire **MO:** Without connector	**WO:** Without connector cable **W□:** With connector cable Note 1)

∗ LN, MN type: with 2 sockets.
∗ For connector cable of M8 connector, refer to page 230.
∗ Connector M8 type "WA" conforming to IEC 60947-5-2 standard, is also available. For details, see page 211.
Note 1) Enter the cable length symbols in □. Please be sure to fill in the blank referring to page 231.

Dimensions: Mixed Mounting

SS5Y5-M45- Stations U-□-Q

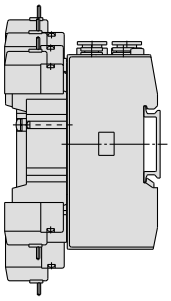

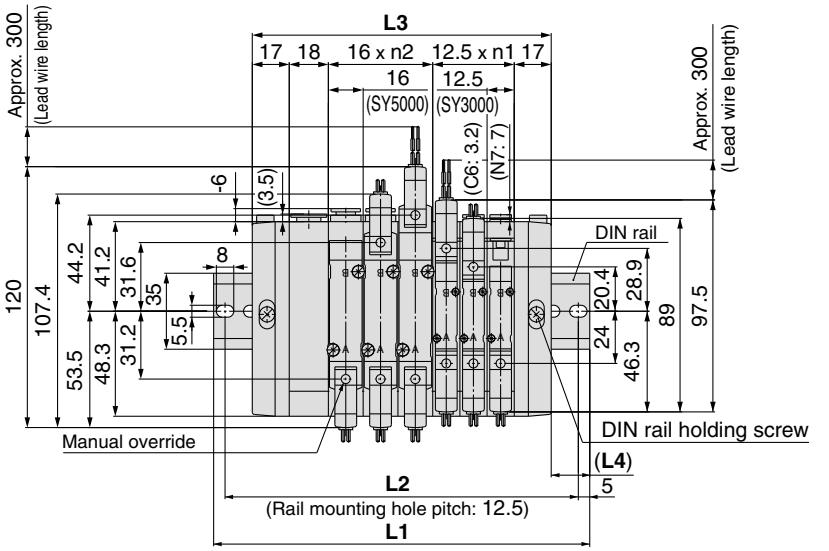

L dimension: Formulae for L1, L4
L3 = 12.5 x n1 + 16 x n2 + 52
M = (L3 / 12.5 + 1) Omit decimals
L1 = 12.5 x M + 23
L2 = L1–10.5
L4= (L1–L3) /2

n1 = Number of SY3000
n2 = Number of SY5000

Note) The **L1** to **L4** dimensions of **SS5Y5-M45- Stations D-Q** are identical to those of SS5Y5-M45- Stations U-Q.

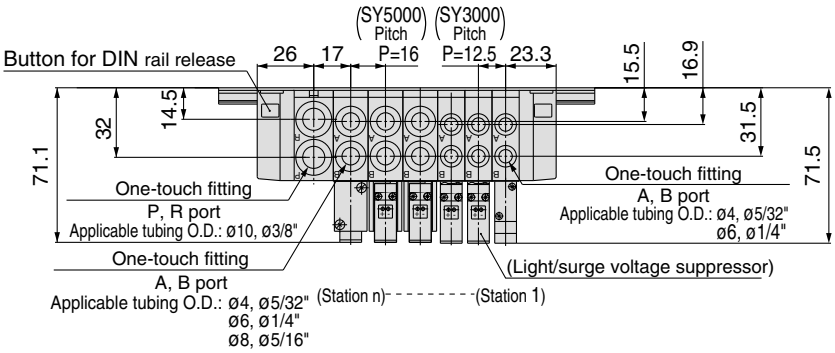

SS5Y5-M45- Stations B-□-Q

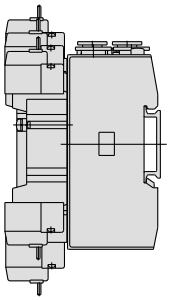

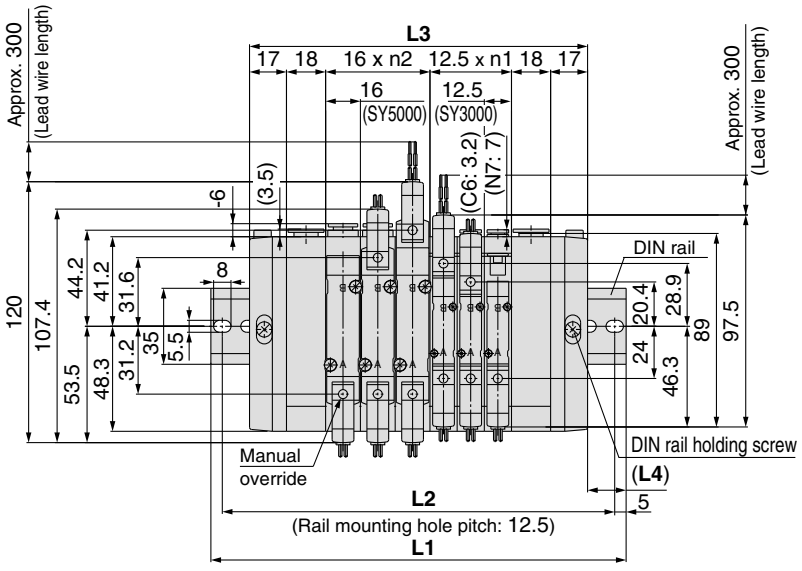

L dimension: Formulae for L1, L4
L3 = 12.5 x n1 + 16 x n2 + 70
M= (L3 / 12.5 + 1) Omit decimals
L1 = 12.5 x M + 23
L2 = L1 – 10.5
L4 = (L1 – L3)/2

n1 = Number of SY3000
n2 = Number of SY5000

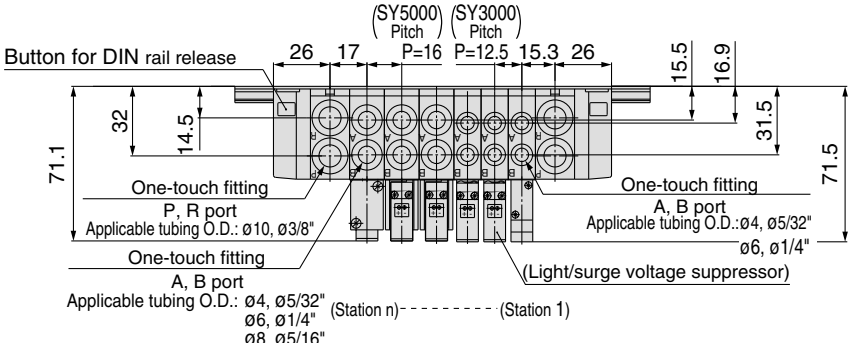

Made to Order Specifications:
Series SY3000/5000/7000/9000, SY300/500
M8 Connector Conforming to **IEC60947-5-2**

M8 Connector type conforming to **IEC60947-5-2** standard.

How to Order Valve

3 port valve (5 port valve mixed mounting type) SY 3 1 3 □ – 5 WAO □ □ – □ □ -Q

5 port valve SY 3 2 2 0 □ – 5 WAO □ □ – □ □ – □ -Q

Type of actuation

3	Body ported
5	Base mounted

Type of actuation

1	Normally closed
2	Normally open

Series

3	SY300
5	SY500

Series

3	SY3000
5	SY5000
7	SY7000
9	SY9000

Type of actuation

1	2 position single
2	2 position double
3	3 position closed center
4	3 position exhaust center
5	3 position pressure center

Body type

2	Body ported
4	Base mounted
6	Body ported cassette type

∗ The body ported cassette type is not available for the SY9000 series.

Note) When placing an order for body ported solenoid valve as a single unit, gaskets are not included. Order them separately, if necessary. (Refer to catalogue on page 56 for details.)

Pilot type

—	Internal pilot
R∗	External pilot

∗ Base mounted type only.

Rated voltage

For DC

5	24 VDC
6	12 VDC
V	6 VDC
S	5 VDC
R	3 VDC

Electrical entry

WAO: Without connector cable



WA□: With connector cable Note 1)

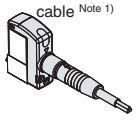

Note 1) □: Enter a symbol for cable length. Enter referring page 231.

Light/Surge voltage suppressor

—	Without light/surge voltage suppressor
S	With surge voltage suppressor
Z	With indicator light and surge voltage suppressor
R	Without surge voltage suppressor (non-polar type)
U	Without light/surge voltage suppressor (non-polar type)

Manual override

—	Non-locking push type
D	Push-turn locking slotted type
E	Push-turn locking lever type

A port size

Thread piping

Symbol	Port size	Applicable series
—	Base mounted	
M5	M5 x 0.8	SY300
01	1/8	SY500

One-touch fitting (Metric size)

Symbol	Port size	Applicable series
C4	One-touch fitting for ø4	SY300
C6	One-touch fitting for ø6	
C4	One-touch fitting for ø4	SY500
C6	One-touch fitting for ø6	
C8	One-touch fitting for ø8	

One-touch fitting (Inch size)

Symbol	Port size	Applicable series
N3	One-touch fitting for 5/32"	SY300
N7	One-touch fitting for 1/4"	
N7	One-touch fitting for 1/4"	SY500
N9	One-touch fitting for 5/16"	

Thread type

—	Rc
F	G
N	NPT
T	NPTF

Made to Order

—	—
X20	Body ported external pilot
X90	Main valve fluororubber

∗ X20 for the SY9000 series is not available.
∗ X20 for the base mounted type is not available.

A, B port size

For body ported

Thread piping

Symbol	Port size	Applicable series
M5	M5 x 0.8	SY3000
01	1/8	SY5000
02	1/4	SY7000
02	1/4	SY9000
03	3/8	

One-touch fitting (Metric size)

Symbol	Port size	Applicable series
C4	One-touch fitting for ø4	SY3000
C6	One-touch fitting for ø6	
C4	One-touch fitting for ø4	SY5000
C6	One-touch fitting for ø6	
C8	One-touch fitting for ø8	
C8	One-touch fitting for ø8	SY7000
C10	One-touch fitting for ø10	
C8	One-touch fitting for ø8	SY9000
C10	One-touch fitting for ø10	
C12	One-touch fitting for ø12	

One-touch fitting (Inch size)

Symbol	Port size	Applicable series
N3	One-touch fitting for ø5/32"	SY3000
N7	One-touch fitting for ø1/4"	
N3	One-touch fitting for ø5/32"	SY5000
N7	One-touch fitting for ø1/4"	
N9	One-touch fitting for ø5/16"	
N9	One-touch fitting for ø5/16"	SY7000
N11	One-touch fitting for ø3/8"	
N9	One-touch fitting for ø5/16"	SY9000
N11	One-touch fitting for ø3/8"	

For Base Mounted

Symbol	Port size	Applicable series
—	Without sub-plate	
01	1/8 With sub-plate	SY3000
02	1/4 With sub-plate	SY5000 SY7000
03	3/8 With sub-plate	SY7000 SY9000
04	1/2 With sub-plate	SY9000

How to Order Pilot Valve

V111 – 5 WAO □

Rated voltage

For DC

5	24 VDC
6	12 VDC
V	6 VDC
S	5 VDC
R	3 VDC

Light/Surge voltage suppressor

—	Without light/surge voltage suppressor
S	With surge voltage suppressor
Z	With indicator light and surge voltage suppressor
R	Without surge voltage suppressor (non-polar type)
U	Without light/surge voltage suppressor (non-polar type)

Electrical entry

WAO	M8 connector	Without connector cable
WA□		With connector cable Note 1)

Note 1) □: Enter a symbol for cable length.

5 Port Solenoid Valve
Series SY3000/5000/7000/9000
Made to Order Body Ported
External Pilot/Fluoro Rubber for Main Value

Body Ported External Pilot

Applicable solenoid valves: SY3□$^{2}_{6}$0, SY5□$^{2}_{6}$0, SY7□$^{2}_{6}$0 series

Model no. SY$^{3}_{5}_{7}$□$^{2}_{6}$0□-□□□□-□-□–X20-Q

● **Entry is the same as standard products.**

Note) Din terminal is not available for the SY3000 series.

Operating pressure range MPa

Operating pressure range	–100 kPa to 0.7
Pilot pressure range	0.25 to 0.7

External pilot port

Series	Port size
SY3000	M3 x 0.5
SY$^{5}_{7}$000	M5 x 0.8

Dimensions

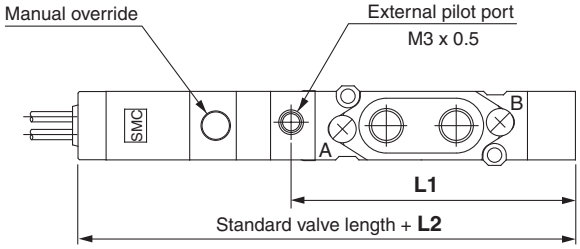

Dimentions/External Pilot Port Position

Series	**L1** dimensions	**L2** dimensions
SY3000	41.5	6.5
SY5000	60.4	9
SY7000	71.9	9

Symbol

Body ported

2 position single

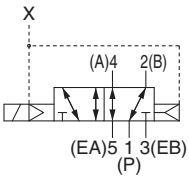

2 position double

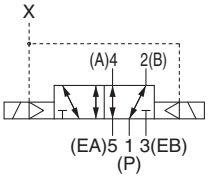

3 position closed centre

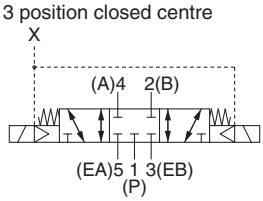

3 position exhaust centre

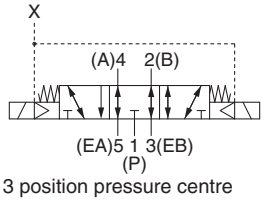

3 position pressure centre

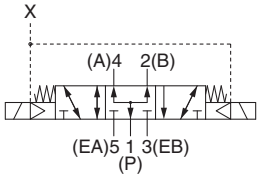

Main Valve Fluororubber Specifications

Fluororubber is used for rubber parts of the main valve to allow use in applications such as the following.

- When using a lubricant other than the recommended turbine oil, and there is a possibility of malfunction due to swelling of the spool valve seals.

Applicable solenoid valves: SY3□$^{2}_{4}_{6}$0, SY5□$^{2}_{4}_{6}$0, SY7□$^{2}_{4}_{6}$0, SY9□$^{2}_{4}$0 series

Model no. SY$^{3}_{5}_{7}_{9}$$^{20}_{40}_{45}_{60}$□-□□□□-□-□-X90-Q

● **Entry is the same as standard products.**
Specifications and performance are the same as standard products.

SY5000
Made to Order
Body Ported Vacuum Release Valve with Throttle Valve

Vacuum Release Valve with Throttle Valve: SY5A2R

- Line for vacuum adsorption transfer
- Built-in throttle valve in the vacuum release valve
- Can be mounted on the SS5Y5-20-type (Individual wiring type) and SS5Y5-20P-type (Flat ribbon cable type) Manifold
- Valve effective area

Symbol

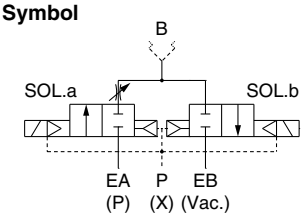

B port Port size Note 1)	Effective area: mm²	
	EA→B Note 2)	B→EB
C6	4.4	6.8
C8	4.5	7.0

Note 1) Refer to the part numbers for the port size.
Note 2) When the built-in throttle valve is fully open.

Specifications

Valve type		External pilot type, Dual 2 port solenoid valve
Type of actuation		Normally closed (N.C. valve)
Fluid		Air
Operating pressure range	**P (External pilot pressure)**	0.15 to 0.7 MPa
	EA (Vacuum release pressure)	0 to 0.7 MPa
	EB (Vacuum)	–100 kPa to 0 MPa
Pilot valve exhaust method		Pilot valve individual exhaust
Ambient and fluid temperature		–10 to 50°C (No condensation)

Effective Area/Weight

B port Port size Note 1)	Effective area: mm²		Weight (g)
	EA→B Note 2)	B→EB	
C6	4.4	6.8	94
C8	4.5	7.0	88

Note 1) Refer to the part numbers for the port size.
Note 2) When the built-in throttle valve is fully open.

How to Order

Single unit: External pilot type dual 2 port solenoid valve

SY5A2R □ – 5 L □ □ – C6 – □ – Q

- **Coil specifications**
- **Rated voltage**
- **Electrical entry**
- **Light/surge voltage suppressor**
- **Manual override**
- **B-port port size**

C6	ø6 One-touch fitting
C8	ø8 One-touch fitting

- **Bracket**

—	Without bracket
F2	With bracket (F2)

Bracket part no.: SX5000-16-8A

Manifold: Body ported bar stock (20/20P/20SA type)

∗ Specify the part numbers for valves and options together beneath the manifold base part number in order starting from the first station.

SS5Y5 – 20 P – 08 – □ – Q

- **Manifold type**

—	Individual wiring type
P	Flat ribbon cable type
SA	EX510 gateway type

- **Stations** Note 4)

03	3 stations
⋮	⋮
20	20 stations

- **Thread type**

Note 4) 20P (Flat ribbon cable type): Max. 12 stations

Example
SS5Y5-20-05 ····· 1 set
∗SY5A2R-5LOU-C6 ··· 5 sets
└→ The asterisk denotes the symbol for assembly. Prefix it to the part nos. of the solenoid valve, etc.

Dimensions/Single Unit: SY5A2R

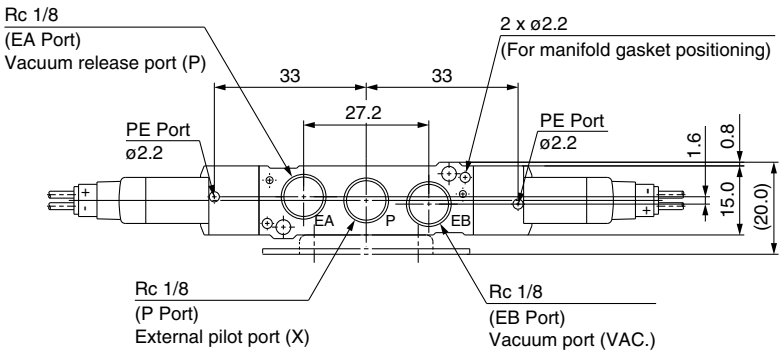

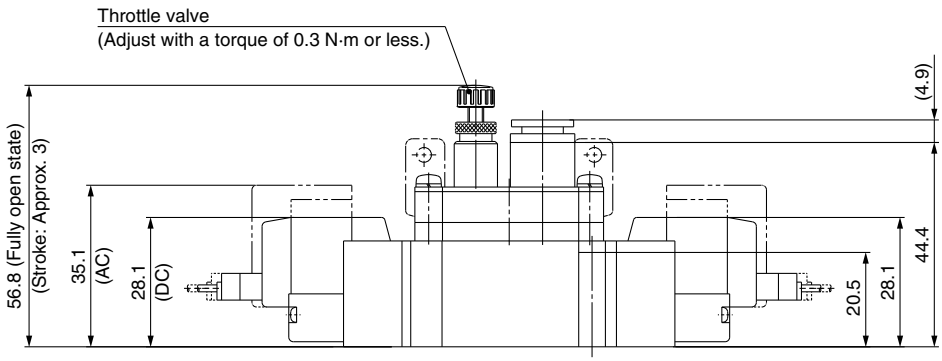

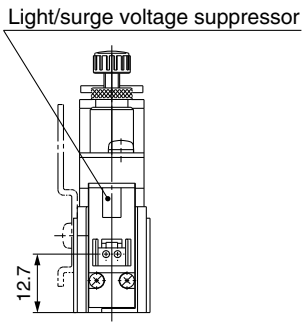

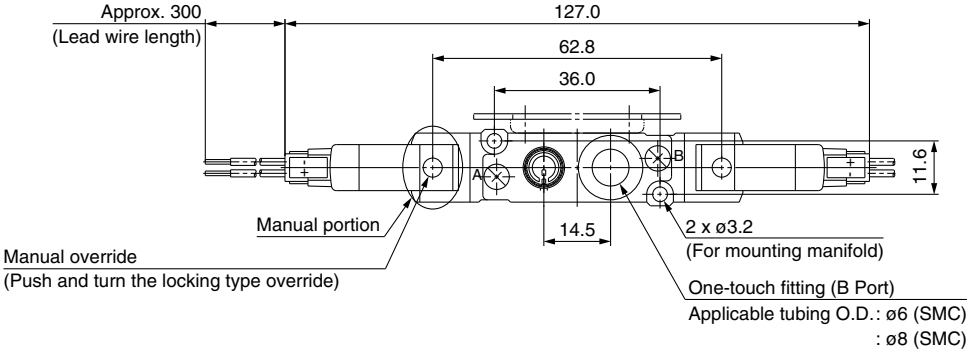

Details of Manual Portion

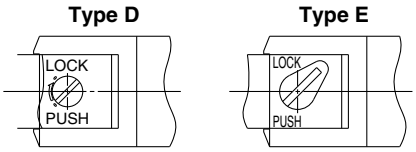

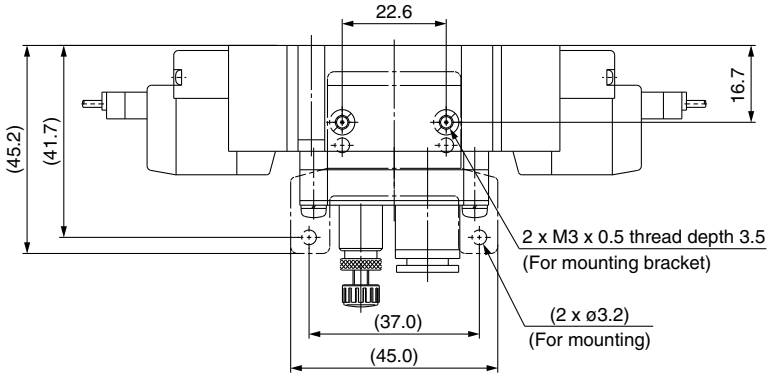

Symbol

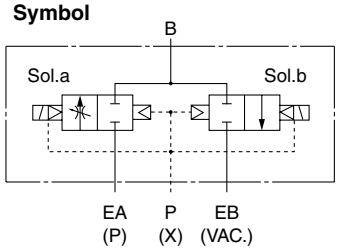

[Remarks for valves]

Note 1) Refer to pages 49, 225 and 226 for the details of electrical entry and electrical circuit with a light/surge voltage suppressor.
Note 2) Diagrams above are compatible with SY5A2R-□L□□□-□□-(F2).
Note 3) When mounted with brackets, the product is mounted in a place specified with one dot chain lines.
Note 4) Applicable pilot valves are SY114/SY115-□□□.

Dimensions/Manifold: SS5Y5-20P-Stations-□□-□

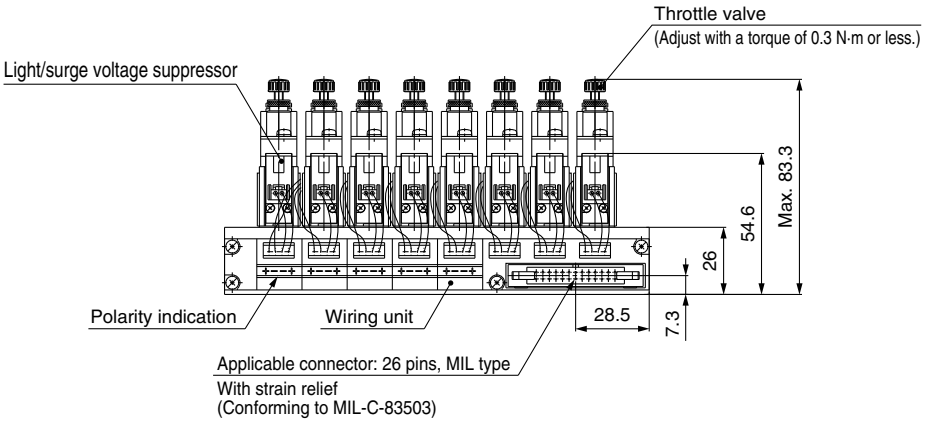

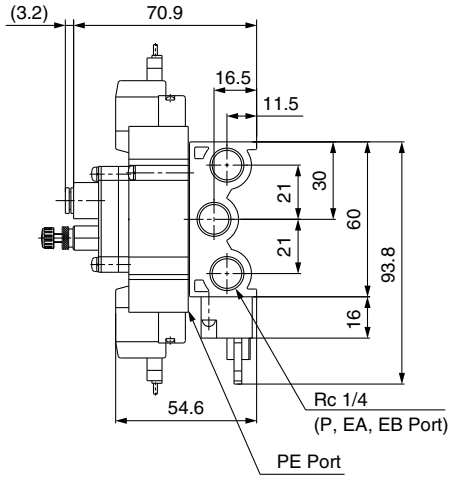

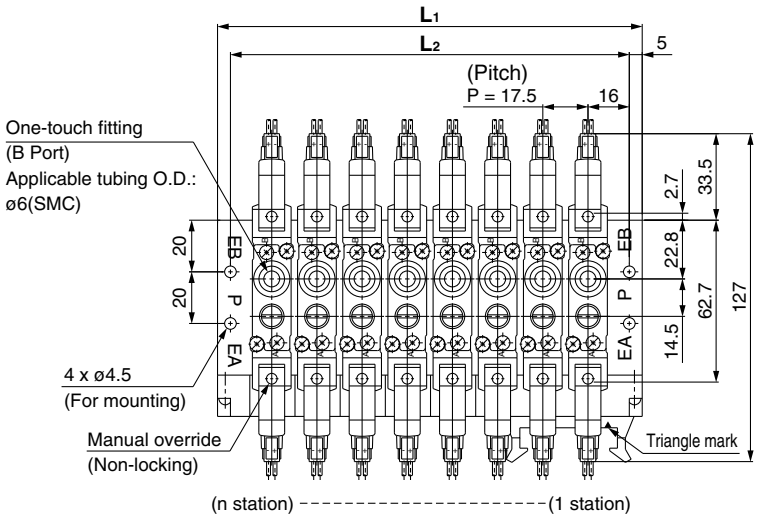

Pneumatic Circuit

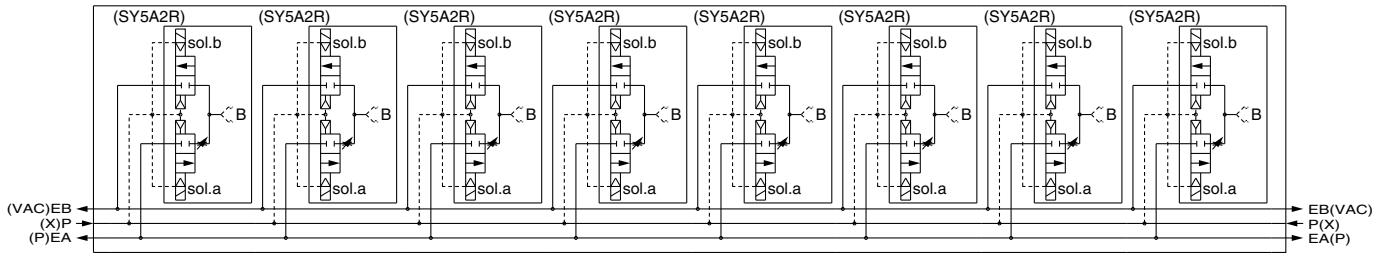

Schematic of Connector (Example: For this figure)
(Light/surge voltage suppressor is not included.)

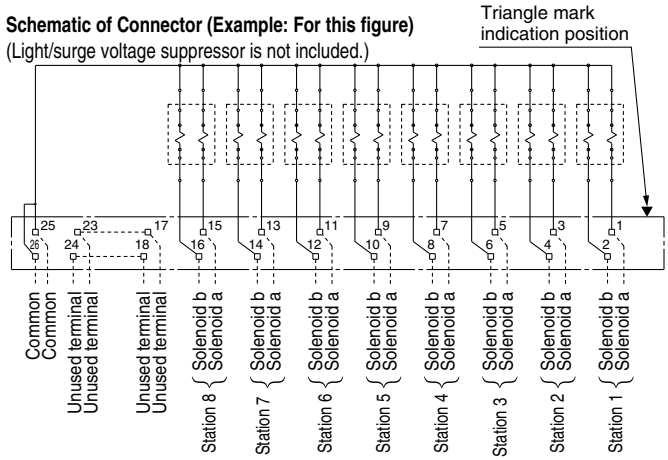

L: Dimensions: mm n: Stations

L \ n	3	4	5	6	7	8	9	10	11	12
L_1	77	94.5	112	129.5	147	164.5	182	199.5	217	234.5
L_2	67	84.5	102	119.5	137	154.5	172	189.5	207	224.5
□□	03	04	05	06	07	08	09	10	11	12

∗ Applicable blanking plate assembly part no.:
SS5Y5-20-□□: SY5000-26-20A (with screws and gaskets)
SS5Y5-20P-□□: SY5000-26-21A (with screws, gaskets and dust cap)
∗ The product cannot be mounted with standard products the SY5000/500 series on a manifold.

How to Use Manifold

⚠ Caution

<20/20P Type>

A piping port is different from that for the standard product. When not connected properly, the product will not operate properly.

[P port: External pilot port, EA port: Vacuum release pressure port, EB port: Vacuum suction port]

<20P Type>

1. **If a large amount of drainage is included in the supply air, it may cause electrical trouble since a wiring unit is located in the place where exhaust from the PE port directly goes through. Be sure to control the supply air.**
2. **For more than 10 stations, both poles of the common should be wired.**
3. **When replacing a solenoid valve, etc., be sure to mount it by placing the solenoid a side on the connector (MIL type) side.**
4. **Terminal no. is not indicated on the connector.**
5. **The terminal no. indicated in the connection schematic of connector, as shown in the reference, means a correlation of 1, 2, 3...26 from the triangle mark side on the flat ribbon cable of connector. (Refer to the reference drawing.)**

Reference drawing

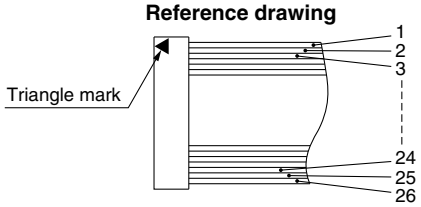

Series SY300/500
Made to Order
Body Ported External Pilot/Fluororubber for Main Valve

Body Ported External Pilot

Applicable solenoid valves: SY3□3, SY5□3

Model no. SY 3/5 □ 3 - □□□□ - □ - □ - X20 - Q

● **Entry is the same as standard products.**

Note) Din terminal is not available for the SY300 series.

Operating pressure range MPa

Operating pressure range	–100 kPa to 0.7
Pilot pressure range	0.25 to 0.7

External pilot port

Series	Port size
SY300	M3 x 0.5
SY500	M5 x 0.8

Dimensions

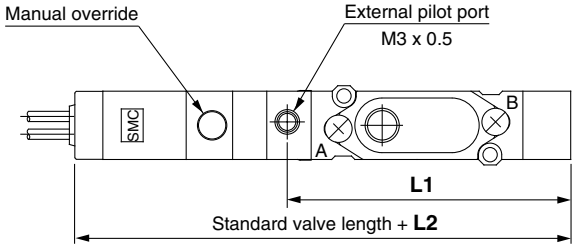

Dimentions/External Pilot Port Position

Series	**L1** dimensions	**L2** dimensions
SY300	41.5	6.5
SY500	60.4	9

Symbol

Body ported
Normally closed (N.C.)
Single solenoid

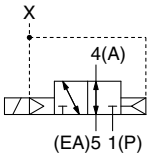

Normally closed (N.C.)
Double solenoid

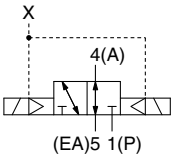

Normally open (N.O.)
Single solenoid

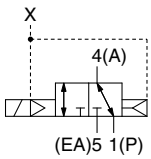

Normally open (N.O.)
Double solenoid

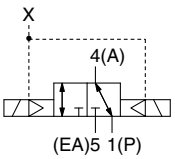

Main Valve Fluororubber Specifications

Fluororubber is used for rubber parts of the main valve to allow use in applications such as the following.

- When using a lubricant other than the recommended turbine oil, and there is a possibility of malfunction due to swelling of the spool valve seals.

Applicable solenoid valves: SY3□3, SY5□3

Model no. SY 3/5 □ 3 - □□□□ - □ - □ - X90 - Q

● **Entry is the same as standard products.**

Specifications and performance are the same as standard products.

Series SY5000/7000
Made to Order
Body Ported/Base Mounted 4-Position Dual 3-Port Valve

Features two 3-port valves built into one body

Body Ported

Model no. SY5/7□20□-□□□□-□□-□-X701-Q

- Entry is the same as standard products.
- Type of actuation

Series	A side	B side
SY□A20	N.C. valve	N.C. valve
SY□B20	N.O. valve	N.O. valve
SY□C20	N.C. valve	N.O. valve

Note) For the thread type, only Rc and G are available.

Base Mounted

Model no. SY5/7□40□-□□□□-□□-X701-Q

- Entry is the same as standard products.
- Type of actuation

Series	A side	B side
SY□A40	N.C. valve	N.C. valve
SY□B40	N.O. valve	N.O. valve
SY□C40	N.C. valve	N.O. valve

Note) For the thread type, only Rc and G are available.
Note) Only the internal pilot type is available.

Specifications

The dimensions are the same as those of the 2-position double.

Response time

Series	Response time [ms] (at the pressure of 0.5 MPa)		
	Without surge voltage suppressor	S, Z type	R, U type
SY5A/B/C□0-X701	26 or less	35 or less	26 or less
SY7A/B/C□0-X701	41 or less	51 or less	44 or less

Flow rate characteristics

1) Body ported

Series (Body ported)	Type of actuation	Port size		Flow rate characteristics			
				1 → 4/2 (P → A/B)		4/2 → 5/3 (A/B → EA/EB)	
		1, 5, 3 (P, EA, EB)	4, 2 (A, B)	C [dm³/(s·bar)]	b	C [dm³/(s·bar)]	b
SY5A/B/C20-X701	N.C./N.C.	1/8	C6	1.4	0.35	1.4	0.34
	N.O./N.O.			1.3	0.36	1.2	0.32
SY7A/B/C20-X701	N.C./N.C.	1 (P) port: 1/4 5, 3 (EA, EB) port: 1/8	C10	3.5	0.25	2.3	0.40
	N.O./N.O.			3.0	0.31	2.6	0.42

2) Base mounted

Series (Base mounted)	Type of actuation	Port size		Flow rate characteristics			
				1 → 4/2 (P → A/B)		4/2 → 5/3 (A/B → EA/EB)	
		1, 5, 3 (P, EA, EB)	4, 2 (A, B)	C [dm³/(s·bar)]	b	C [dm³/(s·bar)]	b
SY5A/B/C40-X701	N.C./N.C.	1/4		1.4	0.36	1.6	0.40
	N.O./N.O.			1.6	0.37	1.6	0.41
SY7A/B/C40-X701	N.C./N.C.	3/8		3.8	0.30	3.6	0.27
	N.O./N.O.			3.9	0.26	3.9	0.32

Symbol

N.C. valve x 2 pcs.

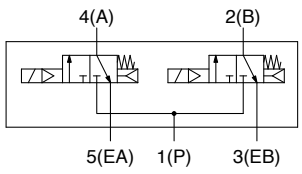

N.O. valve x 2 pcs.

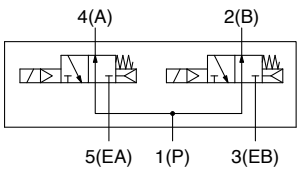

N.C. valve, N.O. valve x 1 pc. of each

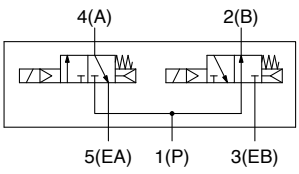

Series SY3000/5000/7000/9000
Pilot Valve Assembly
Port Block Assembly

How to Order Pilot Valve Assembly

V111 □ − 5 G □

Coil specifications

—	Standard
T	With power saving circuit (24 VDC, 12 VDC only)

∗ Power saving circuit is not available in the case of D, DO or W□ type.

Rated voltage

5	24 VDC
6	12 VDC
V	6 VDC
S	5 VDC
R	3 VDC

Light/Surge voltage suppressor

—	Without light/surge voltage suppressor
S	With surge voltage suppressor
Z	With light/surge voltage suppressor
R	With surge voltage suppressor (Non-polar type)
U	With light/surge voltage suppressor (Non-polar type)

∗ Power saving circuit is only available in the "Z" type.

Electrical entry

G	Grommet, 300 mm lead wire	
H	Grommet, 600 mm lead wire	
L	L plug connector	With lead wire
LN		Without lead wire
LO		Without connector
M	M plug connector	With lead wire
MN		Without lead wire
MO		Without connector
WO	M8 connector	Without connector cable
W□		With connector cable Note 1)

∗ For connector cable of M8 connector, refer to page 230.
Note 1) Enter the cable length symbols in □.

■ DIN terminal type

V115 − 5 D □

Rated voltage

5	24 VDC
6	12 VDC
1	100 VAC 50/60 Hz
2	200 VAC 50/60 Hz
3	110 VAC 50/60 Hz [115 VAC 50/60 Hz]
4	220 VAC 50/60 Hz [230 VAC 50/60 Hz]

∗ DC specifications of type D and DO is only available with 12 and 24 VDC.

Light/Surge voltage suppressor

—	Without light/surge voltage suppressor
S	With surge voltage suppressor (Non-polar type)
Z	With light/surge voltage suppressor (Non-polar type)

∗ DOZ and YOZ are not available.
∗ For AC voltage valves there is no "S" option. It is already built-in to the rectifier circuit.

Electrical entry

D	DIN terminal (Type D)	With connector
DO		Without connector
Y	DIN terminal (Type Y)	With connector
YO		Without connector

Note) Do not replace V111 (G, H, L, M) to V115 (DIN terminal) and vice versa when replacing pilot valve assembly only.

Note) Since V111 and V115 are CE/UKCA-compliant as standard, the suffix "-Q" is not necessary.

How to Order Port Block Assembly

SY □ 000 − 6A − □ □

Series

3	SY3000
5	SY5000
7	SY7000
9	SY9000

A, B port size
Thread piping

Symbol	Port size	Applicable series
M5	M5 x 0.8	SY3000
01	1/8	SY5000
02	1/4	SY7000
02	1/4	SY9000
03	3/8	

Thread type

—	Rc
F	G
N	NPT
T	NPTF

∗ Except for M5

One-touch fitting (Metric size)

Symbol	Port size	Applicable series
C4	One-touch fitting for ø4	SY3000
C6	One-touch fitting for ø6	
C4	One-touch fitting for ø4	SY5000
C6	One-touch fitting for ø6	
C8	One-touch fitting for ø8	
C8	One-touch fitting for ø8	SY7000
C10	One-touch fitting for ø10	
C8	One-touch fitting for ø8	SY9000
C10	One-touch fitting for ø10	
C12	One-touch fitting for ø12	

One-touch fitting (Inch size)

Symbol	Port size	Applicable series
N3	One-touch fitting for ø5/32"	SY3000
N7	One-touch fitting for ø1/4"	
N3	One-touch fitting for ø5/32"	SY5000
N7	One-touch fitting for ø1/4"	
N9	One-touch fitting for ø5/16"	
N9	One-touch fitting for ø5/16"	SY7000
N11	One-touch fitting for ø3/8"	
N9	One-touch fitting for ø5/16"	SY9000
N11	One-touch fitting for ø3/8"	

How to Change Port Block Assembly

Connecting port size of A and B can be changed by replacing port block assembly mounted on body. When changing block assembly, correct screw torque must be achieved to avoid trouble; e.g. air leakage.
With the one-touch fitting port block assembly, it is only necessary to change the fitting and not the whole block. Refer to following part numbers.

One-touch fitting (Metric size)

Port size	Fitting assembly part no.	Applicable series
One-touch fitting for ø4	VVQ1000-50A-C4	SY3000
One-touch fitting for ø6	VVQ1000-50A-C6	
One-touch fitting for ø4	VVQ1000-51A-C4	SY5000
One-touch fitting for ø6	VVQ1000-51A-C6	
One-touch fitting for ø8	VVQ1000-51A-C8	
One-touch fitting for ø8	VVQ2000-51A-C8	SY7000
One-touch fitting for ø10	VVQ2000-51A-C10	
One-touch fitting for ø8	VVQ4000-50B-C8	SY9000
One-touch fitting for ø10	VVQ4000-50B-C10	
One-touch fitting for ø12	VVQ4000-50B-C12	

One-touch fitting (Inch size)

Port size	Fitting assembly part no.	Applicable series
One-touch fitting for ø5/32"	VVQ1000-50A-N3	SY3000
One-touch fitting for ø1/4"	VVQ1000-50A-N7	
One-touch fitting for ø5/32"	VVQ1000-51A-N3	SY5000
One-touch fitting for ø1/4"	VVQ1000-51A-N7	
One-touch fitting for ø5/16"	VVQ1000-51A-N9	
One-touch fitting for ø1/4"	VVQ2000-51A-N9	SY7000
One-touch fitting for ø3/8"	VVQ2000-51A-N11	
One-touch fitting for ø5/16"	VVQ4000-50B-N9	SY9000
One-touch fitting for ø3/8"	VVQ4000-50B-N11	

Note) Purchasing order is available in units of 10 pieces.

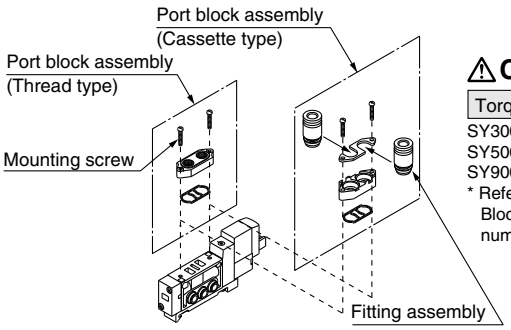

⚠ Caution

Torque for mounting screws
SY3000 (M2): 0.12N·m
SY5000/7000 (M3): 0.6·Nm
SY9000 (M4): 1.4N·m
* Refer to "How to Change Port Block Assembly" for part numbers.

5 Port Solenoid Valve
Body Ported/Single Unit
Series SY3000/5000/7000/9000

How to Order

30 – SY [5] [1] 20 [ ] – [5] [L] [ ] [ ] – [01] [ ] – [ ] – [ ] – Q

Series

3	SY3000
5	SY5000
7	SY7000
9	SY9000

Conforming to UL standard

Type of actuation

1	2 position single (A)4 2(B) (EA)5 1 3(EB) (P)
2	2 position double (A)4 2(B) (EA)5 1 3(EB) (P)
3	3 position closed center (A)4 2(B) (EA)5 1 3(EB) (P)
4	3 position exhaust center (A)4 2(B) (EA)5 1 3(EB) (P)
5	3 position pressure center (A)4 2(B) (EA)5 1 3(EB) (P)

Coil specifications

–	Standard
T	With power saving circuit (24 VDC, 12 VDC only)

∗ Power saving circuit is not available in the case of D, Y, DO, YO or W□ type.

Rated voltage

DC

5	24 VDC
6	12 VDC
V	6 VDC
S	5 VDC
R	3 VDC

AC (50/60 Hz)

B	24 VAC

∗ DC specifications of type D, Y, DO and YO is only available with 12 and 24 VDC.
∗ For type W□, DC voltage is only available.

Electrical entry

24, 12, 6, 5, 3 VDC/24 VAC			24, 12 VDC/24 VAC
Grommet	L plug connector	M plug connector	DIN terminal
G: Lead wire length 300 mm	**L:** With lead wire (Length 300 mm)	**M:** With lead wire (Length 300 mm) **MN:** Without lead wire	**D,Y:** With connector
H: Lead wire length 600 mm	**LN:** Without lead wire	**LO:** Without connector **MO:** Without connector	**DO,YO:** Without connector

24, 12, 6, 5, 3 VDC	
M8 connector	M8 connector (IEC60947-5-2 Standard)
WO: Without connector cable	**WAO:** Without connector cable
W1: With connector cable (Length 0.3 m) **W2:** With connector cable (Length 0.5 m) **W3:** With connector cable (Length 1 m) **W4:** With connector cable (Length 2 m) **W5:** With connector cable (Length 3 m) **W6:** With connector cable (Length 4 m) **W7:** With connector cable (Length 5 m)	**WA1:** With connector cable (Length 0.3 m) **WA2:** With connector cable (Length 0.5 m) **WA3:** With connector cable (Length 1 m) **WA4:** With connector cable (Length 2 m) **WA5:** With connector cable (Length 3 m) **WA6:** With connector cable (Length 4 m) **WA7:** With connector cable (Length 5 m)

∗ LN, MN type: with 2 sockets.
∗ For DIN terminal of SY3000 series, refer to page 228.
∗ "Y" type is a DIN terminal conforming to EN-175301-803C (former DIN43650C). For details, refer to page 227.
∗ For connector cable of M8 connector, refer to page 230.
∗ For the M8 connector with a connector cable, only American certification ( ) is available.
∗ Refer to page 227 for the lead wire length of L and M plug connectors.

A, B port size

Thread piping

Symbol	Port size	Applicable series
M5	M5 x 0.8	SY3000
01	1/8	SY5000
02	1/4	SY7000
02	1/4	SY9000
03	3/8	

One-touch fitting (Metric size)

Symbol	Port size	Applicable series
C4	One-touch fitting for ø4	SY3000
C6	One-touch fitting for ø6	
C4	One-touch fitting for ø4	SY5000
C6	One-touch fitting for ø6	
C8	One-touch fitting for ø8	
C8	One-touch fitting for ø8	SY7000
C10	One-touch fitting for ø10	
C8	One-touch fitting for ø8	SY9000
C10	One-touch fitting for ø10	
C12	One-touch fitting for ø12	

One-touch fitting (Inch size)

Symbol	Port size	Applicable series
N3	One-touch fitting for ø 5/32"	SY3000
N7	One-touch fitting for ø 1/4"	
N3	One-touch fitting for ø 5/32"	SY5000
N7	One-touch fitting for ø 1/4"	
N9	One-touch fitting for ø 5/16"	
N9	One-touch fitting for ø 5/16"	SY7000
N11	One-touch fitting for ø 3/8"	
N9	One-touch fitting for ø 5/16"	SY9000
N11	One-touch fitting for ø 3/8"	

Bracket

–: Without bracket
F1: With foot bracket (2 position single only)

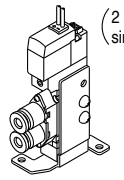

F2: With side bracket

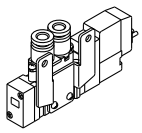

∗ SY9000 has no bracket.

Thread type

–	Rc
F	G
N	NPT
T	NPTF

∗ Except for M5

Made to Order

–	–
X20	Body ported external pilot
X90	Main valve fluoro rubber
X701	4-position dual 3-port valve

Manual override

–: Non-locking push type	D: Push-turn locking slotted type	E: Push-turn locking lever type
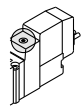	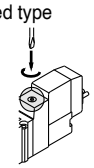	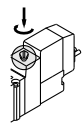

Light/Surge voltage suppressor

Electrical entry for G, H, L, M, W

–	Without light/surge voltage suppressor
S	With surge voltage suppressor
Z	With light/surge voltage suppressor
R	With surge voltage suppressor (Non-polar type)
U	With light/surge voltage suppressor (Non-polar type)

∗ For AC voltage valves there is no "S" option. It is already built-in to the rectifier circuit.
∗ For "R" and "U", DC voltage is only available.
∗ Power saving circuit is only available in the "Z" type

Electrical entry for D, Y

–	Without light/surge voltage suppressor
S	With surge voltage suppressor
Z	With light/surge voltage suppressor

∗ DOZ and YOZ are not available.
∗ For AC voltage valves there is no "S" option. It is already built-in to the rectifier circuit.

Note) When placing an order for body ported solenoid valve as a single unit, mounting screw for manifold and gasket are not attached. Order them separately, if necessary.

Refer to the standard product for specifications and dimensions.

5 Port Solenoid Valve
Base Mounted/Single Unit
Series SY3000/5000/7000/9000

How to Order

30 – SY [5] [2] 40 [ ][ ] – [5] [L][ ][ ] – [ ][ ] – [ ] – Q

Series

3	SY3000
5	SY5000
7	SY7000
9	SY9000

Conforming to UL standard

Pilot type

–	Internal pilot
R	External pilot

Coil specifications

–	Standard
T	With power saving circuit (24 VDC, 12 VDC only)

∗ Power saving circuit is not available in the case of D, Y, DO, YO or W□ type.

Rated voltage

DC

5	24 VDC
6	12 VDC
V	6 VDC
S	5 VDC
R	3 VDC

AC (50/60 Hz)

B	24 VAC

∗ DC specifications of type D, Y, DO and YO is only available with 12 and 24 VDC.
∗ For type W□, DC voltage is only available.

Port size

Symbol	Port size	Applicable series
–	Without sub-plate	
01	1/8 With sub-plate	SY3000
02	1/4 With sub-plate	SY5000 SY7000
03	3/8 With sub-plate	SY7000 SY9000
04	1/2 With sub-plate	SY9000

Made to Order

–	–
X90	Main valve fluororubber
X701	4-position dual 3-port valve

Thread type

–	Rc
F	G
N	NPT
T	NPTF

Manual override

–: Non-locking push type	D: Push-turn locking slotted type	E: Push-turn locking lever type
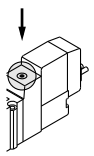	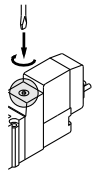	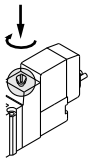

Light/Surge voltage suppressor

Electrical entry for G, H, L, M, W

–	Without light/surge voltage suppressor
S	With surge voltage suppressor
Z	With light/surge voltage suppressor
R	With surge voltage suppressor (Non-polar type)
U	With light/surge voltage suppressor (Non-polar type)

∗ For AC voltage valves there is no "S" option. It is already built-in to the rectifier circuit.
∗ For "R" and "U", DC voltage is only available.
∗ Power saving circuit is only available in the "Z" type

Electrical entry for D, Y

–	Without light/surge voltage suppressor
S	With surge voltage suppressor
Z	With light/surge voltage suppressor

∗ DOZ and YOZ are not available.
∗ For AC voltage valves there is no "S" option. It is already built-in to the rectifier circuit.

Type of actuation

1	2 position single (A)4 2(B) (EA)5 1 3(EB) (P)
2	2 position double (A)4 2(B) (EA)5 1 3(EB) (P)
3	3 position closed center (A)4 2(B) (EA)5 1 3(EB) (P)
4	3 position exhaust center (A)4 2(B) (EA)5 1 3(EB) (P)
5	3 position pressure center (A)4 2(B) (EA)5 1 3(EB) (P)

Electrical entry

24, 12, 6, 5, 3 VDC/24 VAC				24, 12 VDC/24 VAC	24, 12, 6, 5, 3 VDC	
Grommet	L plug connector	M plug connector		DIN terminal	M8 connector	M8 connector (IEC60947-5-2 Standard)
G: Lead wire length 300 mm	**L:** With lead wire (Length 300 mm)	**M:** With lead wire (Length 300 mm)	**MN:** Without lead wire	**D,Y:** With connector	**WO:** Without connector cable	**WAO:** Without connector cable
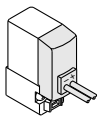	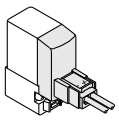	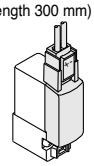	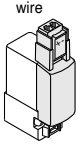	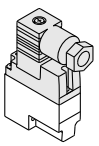		
H: Lead wire length 600 mm	**LN:** Without lead wire	**LO:** Without connector	**MO:** Without connector	**DO,YO:** Without connector	**W1:** With connector cable (Length 0.3 m) **W2:** With connector cable (Length 0.5 m) **W3:** With connector cable (Length 1 m) **W4:** With connector cable (Length 2 m) **W5:** With connector cable (Length 3 m) **W6:** With connector cable (Length 4 m) **W7:** With connector cable (Length 5 m)	**WA1:** With connector cable (Length 0.3 m) **WA2:** With connector cable (Length 0.5 m) **WA3:** With connector cable (Length 1 m) **WA4:** With connector cable (Length 2 m) **WA5:** With connector cable (Length 3 m) **WA6:** With connector cable (Length 4 m) **WA7:** With connector cable (Length 5 m)
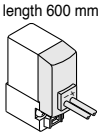	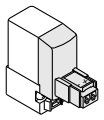	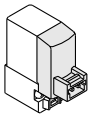	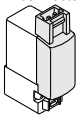	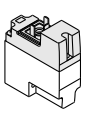	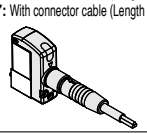	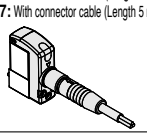

∗ LN, MN type: with 2 sockets.
∗ For DIN terminal of SY3000 series, refer to page 228.
∗ "Y" type is a DIN terminal conforming to EN-175301-803C (former DIN43650C). For details, refer to page 227.
∗ For connector cable of M8 connector, refer to page 230.
∗ For the M8 connector with a connector cable, only American certification (cULus) is available.
∗ Refer to page 227 for the lead wire length of L and M plug connectors.

Note) When ordering single unit of the base mounted type solenoid valve, the mounting screws and gaskets for the manifold are included.

Refer to the standard product for specifications and dimensions.

3 Port Solenoid Valve
Body Ported/Single Unit
Series SY300/500

How to Order

30 – SY 5 1 3 □ □ – 5 L □ □ – 01 □ – □ – □ – Q

Series

3	SY300
5	SY500

UL standard compliant

Type of actuation

1	Normally closed (N.C.)
2	Normally open (N.O.)

Solenoid type

—	Single solenoid
D	Double solenoid

Coil specifications

—	Standard
T	With power saving circuit (24 VDC, 12 VDC only)

∗ Power saving circuit is not available in the case of D, Y, DO, YO or W□ type.

Rated voltage

DC

5	24 VDC
6	12 VDC
V	6 VDC
S	5 VDC
R	3 VDC

AC (50/60 Hz)

B	24 VAC

∗ DC specifications of type D, Y, DO and YO is only available with 12 and 24 VDC.
∗ For type W□, DC voltage is only available.

Light/Surge voltage suppressor

Electrical entry for G, H, L, M, W

—	Without light/surge voltage suppressor
S	With surge voltage suppressor
Z	With light/surge voltage suppressor
R	With surge voltage suppressor (Non-polar type)
U	With light/surge voltage suppressor (Non-polar type)

∗ For AC voltage valves there is no "S" option. It is already built-in to the rectifier circuit.
∗ For "R" and "U", DC voltage is only available.
∗ Power saving circuit is only available in the "Z" type

Electrical entry for D, Y

—	Without light/surge voltage suppressor
S	With surge voltage suppressor
Z	With light/surge voltage suppressor

∗ DOZ and YOZ are not available.
∗ For AC voltage valves there is no "S" option. It is already built-in to the rectifier circuit.

Thread type

—	Rc
F	G
N	NPT
T	NPTF

∗ Except for M5

A port size

Thread piping

Symbol	Port size	Applicable series
M5	M5 x 0.8	SY300
01	1/8	SY500

One-touch fitting (Metric size)

Symbol	Port size	Applicable series
C4	One-touch fitting for ø4	SY300
C6	One-touch fitting for ø6	
C4	One-touch fitting for ø4	SY500
C6	One-touch fitting for ø6	
C8	One-touch fitting for ø8	

One-touch fitting (Inch size)

Symbol	Port size	Applicable series
N3	One-touch fitting for ø5/32"	SY300
N7	One-touch fitting for ø1/4"	
N3	One-touch fitting for ø5/32"	SY500
N7	One-touch fitting for ø1/4"	
N9	One-touch fitting for ø5/16"	

Made to Order

—	—
X20	Body ported external pilot
X90	Main valve fluororubber

Bracket

—: Without bracket
F1: With foot bracket (2 position single only)

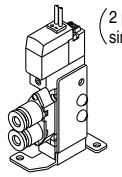

F2: With side bracket

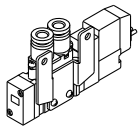

Manual override

—: Non-locking push type	D: Push-turn locking slotted type	E: Push-turn locking lever type
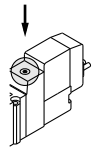	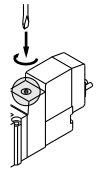	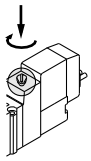

Electrical entry

24, 12, 6, 5, 3 VDC/24 VAC			24, 12 VDC/24 VAC	24, 12, 6, 5, 3 VDC	
Grommet	L plug connector	M plug connector	DIN terminal	M8 connector	M8 connector (IEC60947-5-2 Standard)
G: Lead wire length 300 mm **H:** Lead wire length 600 mm	**L:** With lead wire (Length 300 mm) **LN:** Without lead wire **LO:** Without connector	**M:** With lead wire (Length 300 mm) **MN:** Without lead wire **MO:** Without connector	**D:** With connector **DO:** Without connector **Y:** With connector **YO:** Without connector	**WO:** Without connector cable **W1:** With connector cable (Length 300 mm) **W2:** With connector cable (Length 500 mm) **W3:** With connector cable (Length 1000 mm) **W4:** With connector cable (Length 2000 mm) **W5:** With connector cable (Length 3000 mm) **W6:** With connector cable (Length 4000 mm) **W7:** With connector cable (Length 5000 mm)	**WAO:** Without connector cable **WA1:** With connector cable (Length 300 mm) **WA2:** With connector cable (Length 500 mm) **WA3:** With connector cable (Length 1000 mm) **WA4:** With connector cable (Length 2000 mm) **WA5:** With connector cable (Length 3000 mm) **WA6:** With connector cable (Length 4000 mm) **WA7:** With connector cable (Length 5000 mm)

∗ LN, MN type: with 2 sockets.
∗ For DIN terminal of SY300 series, refer to page 228.
∗ "Y" type is a DIN terminal conforming to EN-175301-803C (former DIN43650C). For details, refer to page 227.
∗ For connector cable of M8 connector, refer to page 230.
∗ For the M8 connector with a connector cable, only American certification ( ) is available.
∗ Refer to page 638 for the lead wire length of L and M plug connectors.

Note) When placing an order for body ported solenoid valve as a single unit, mounting screw for manifold and gasket are not attached. Order them separately, if necessary.

3 Port Solenoid Valve
Base Mounted/Single Unit
Series SY300/500

How to Order

30 – SY [5] [1] 5 [ ] [ ] [ ] – 5 [L] [ ] [ ] – [ ] [ ] – [ ] – Q

Series

3	SY300
5	SY500

UL standard compliant

Type of actuation

1	Normally closed (N.C.)
2	Normally open (N.O.)

Solenoid type

—	Single solenoid
D	Double solenoid

Pilot type

—	Internal pilot
R	External pilot

Coil specifications

—	Standard
T	With power saving circuit (24 VDC, 12 VDC only)

∗ Power saving circuit is not available in the case of D, Y, DO, YO or W□ type.

Rated voltage

DC

5	24 VDC
6	12 VDC
V	6 VDC
S	5 VDC
R	3 VDC

AC (50/60 Hz)

B	24 VAC

∗ DC specifications of type D, Y, DO and YO is only available with 12 and 24 VDC.
∗ For type W□, DC voltage is only available.

Thread type

—	Rc
F	G
N	NPT
T	NPTF

Made to Order

—	—
X90	Main valve fluororubber

Port size

Symbol	Port size	Applicable series
—	Without sub-plate	
01	1/8 With sub-plate	SY300
02	1/4 With sub-plate	SY500

Manual override

—: Non-locking push type	D: Push-turn locking slotted type	E: Push-turn locking lever type
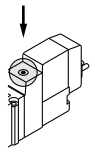	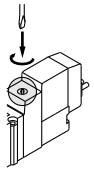	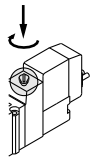

Light/Surge voltage suppressor

Electrical entry for G, H, L, M, W

—	Without light/surge voltage suppressor
S	With surge voltage suppressor
Z	With light/surge voltage suppressor
R	With surge voltage suppressor (Non-polar type)
U	With light/surge voltage suppressor (Non-polar type)

∗ For AC voltage valves there is no "S" option. It is already built-in to the rectifier circuit.
∗ For "R" and "U", DC voltage is only available.
∗ Power saving circuit is only available in the "Z" type

Electrical entry for D, Y

—	Without light/surge voltage suppressor
S	With surge voltage suppressor
Z	With light/surge voltage suppressor

∗ DOZ and YOZ are not available.
∗ For AC voltage valves there is no "S" option. It is already built-in to the rectifier circuit.

Electrical entry

24, 12, 6, 5, 3 VDC/24 VAC			24, 12 VDC/24 VAC	24, 12, 6, 5, 3 VDC	
Grommet	L plug connector	M plug connector	DIN terminal	M8 connector	M8 connector (IEC60947-5-2 Standard)
G: Lead wire length 300 mm **H:** Lead wire length 600 mm	**L:** With lead wire (Length 300 mm) **LN:** Without lead wire **LO:** Without connector	**M:** With lead wire (Length 300 mm) **MN:** Without lead wire **MO:** Without connector	**D:** With connector **DO:** Without connector **Y:** With connector **YO:** Without connector	**WO:** Without connector cable **W1:** With connector cable (Length 300 mm) **W2:** With connector cable (Length 500 mm) **W3:** With connector cable (Length 1000 mm) **W4:** With connector cable (Length 2000 mm) **W5:** With connector cable (Length 3000 mm) **W6:** With connector cable (Length 4000 mm) **W7:** With connector cable (Length 5000 mm)	**WAO:** Without connector cable **WA1:** With connector cable (Length 300 mm) **WA2:** With connector cable (Length 500 mm) **WA3:** With connector cable (Length 1000 mm) **WA4:** With connector cable (Length 2000 mm) **WA5:** With connector cable (Length 3000 mm) **WA6:** With connector cable (Length 4000 mm) **WA7:** With connector cable (Length 5000 mm)

∗ LN, MN type: with 2 sockets.
∗ For DIN terminal of SY300 series, refer to page 228.
∗ "Y" type is a DIN terminal conforming to EN-175301-803C (former DIN43650C).
∗ For connector cable of M8 connector, refer to page 230.
∗ For the M8 connector with a connector cable, only American certification ( ) is available.
∗ Refer to page 638 for the lead wire length of L and M plug connectors.

Note) When ordering single unit of the base mounted type solenoid valve, the mounting screws and gaskets for the manifold are included.

Base Mounted/How to Order Valve

Plug-in: for SS5Y$^{3}_{5}$-45□

Single solenoid 30 − SY 5 1 5 □ − 5 FU □ □ − Q

Double solenoid 30 − SY 5 1 5C □ − 5 FU □ □ − Q

Series

3	SY300
5	SY500

Type of actuation

1	Normally closed (N.C.)
2	Normally open (N.C.)

Dual body type

∗ When ordering double solenoid valves (Dual body type), please keep in mind that they require two manifold stations.

Pilot type

—	Internal pilot
R	External pilot

Rated voltage

5	24 VDC
6	12 VDC

Made to Order

—	—
X90	Main valve fluororubber

Manual override

—: Non-locking push type	D: Push-turn locking slotted type	E: Push-turn locking lever type
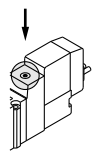	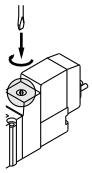	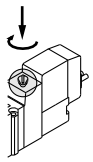

Plug-in: For SS5Y$^{3}_{5}$-45F/45P□/45T/45T1

2 position single 30 − SY 3 1 40 □ − 5 FU □ □ − Q

Double, 3 position 30 − SY 3 2 45 □ − 5 FU □ □ − Q

Series

3	SY3000
5	SY5000

Type of actuation

2	2 position double
3	3 position closed centre
4	3 position exhaust centre
5	3 position pressure centre

Dual body type (Double, 3 position)

Pilot type

—	Internal pilot
R	External pilot

Rated voltage

5	24 VDC
6	12 VDC

Made to Order

—	—
X90	Main valve fluororubber

Manual override

—: Non-locking push type	D: Push-turn locking slotted type	E: Push-turn locking lever type
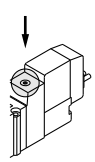	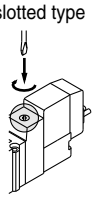	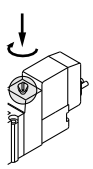

Series SY
Specific Product Precautions 1

Be sure to read this before handling the products. For safety instructions and 3/4/5-port solenoid valve precautions, refer to the "Handling Precautions for SMC Products" and the "Operation Manual" on the SMC website: https://www.smc.eu

Manual Override Operation

⚠Warning

■ Non-locking push type [Standard]

Press in the direction of the arrow

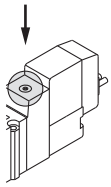

■ Push-turn locking slotted type [Type D]

While pressing, turn in the direction of the arrow.
If it is not turned, it can be operated the same way as the non-locking type.

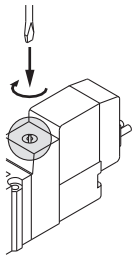

Locked position



⚠Caution

When operating the locking type D with a screw driver, turn it gently using a watchmakers screw driver.
[Torque: Less than 0.1 N·m]

■ Push-turn locking lever type [Type E]

While pressing, turn it the direction of the arrow.
If it is not turned, it can be operated the same way as the non-locking type.

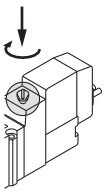

Locked position

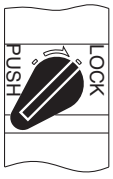

⚠Caution

When locking the manual override on the push-turn locking types (D, E), be sure to push it down before turning.
Turning without first pushing it down can cause damage to the manual override and trouble such as air leakage, etc.

Solenoid Valve for 200, 220 VAC Specifications

⚠Warning

Solenoid valves with DIN terminal and L/M type plug connector AC specifications have a built-in rectifier circuit in the pilot section to operate the DC coil.
With 200 V, 220 VAC specification pilot valves, this built-in rectifier generates heat when energised. The surface may become hot depending on the energised condition; therefore, do not touch the solenoid valves.

Exhaust Throttle

⚠Caution

With series SY, the pilot valve and main valve share a common exhaust inside the valve. Therefore, do not block the exhaust port when arranging the piping.

Series SY3000/5000/7000/9000 Used as a 3-Port Valve

⚠ Caution

In case of using a 5-port valve as a 3-port valve

Series SY3000/5000/7000/9000 can be used as normally closed (N.C.) or normally open (N.O.) 3-port port valves by closing one of the cylinder ports (A or B) with a plug. However, they should be used with the exhaust ports kept open.

Plug position		B port	A port
Configuration		N.C.	N.O.
Number of solenoids	Single	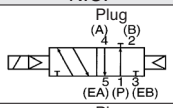	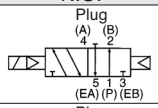
	Double	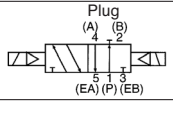	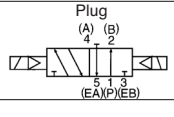

Series SY
Specific Product Precautions 2

Be sure to read this before handling the products. For safety instructions and 3/4/5-port solenoid valve precautions, refer to the "Handling Precautions for SMC Products" and the "Operation Manual" on the SMC website: https://www.smc.eu

How to Use Plug Connector

⚠ Caution

1. Attaching and detaching connectors

- To attach a connector, hold the lever and connector unit between your fingers and insert straight onto the pins of the solenoid valve so that the lever's pawl is pushed into the groove and locks.
- To detach a connector, remove the pawl from the groove by pushing the lever downward with your thumb, and pull the connector straight out.

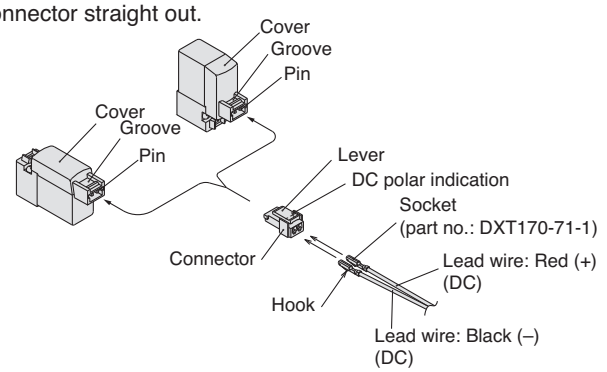

2. Crimping connection of lead wire and socket

Strip 3.2 to 3.7 mm at the end of lead wires, insert the end of the core wires evenly into the sockets, and then crimp it by a crimping tool. When this is done, take care that the coverings of the lead wires do not enter the core wire crimping area.
(Crimping tool: Model no. DXT170-75-1)

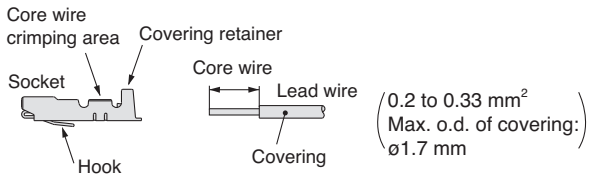

3. Attaching and detaching lead wires with sockets

• Attaching

Insert the sockets into the square holes of the connector (+, – indication), and continue to push the sockets all the way in until they lock by hooking into the seats in the connector.

(When they are pushed in, their hooks open and they are locked automatically.) Then confirm that they are locked by pulling lightly on the lead wires.

• Detaching

To detach a socket from a connector, pull out the lead wire while pressing the socket's hook with a stick having a thin tip (approx. 1 mm).

If the socket will be used again, first spread the hook outward.

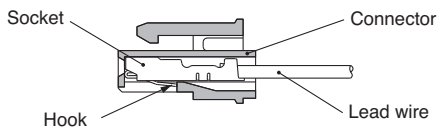

Surge Voltage Suppressor

⚠ Caution

<For DC>
Grommet, L/M Plug Connector

■ Standard type (With polarity)

With surge voltage suppressor (□S)



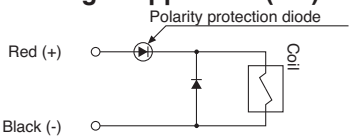

With light/surge voltage suppressor (□Z)

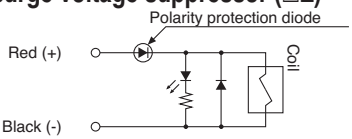

■ Non-polar type

With surge voltage suppressor (□R)



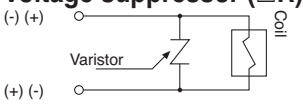

With light/surge voltage suppressor (□U)

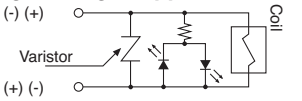

- Connect the standard type in accordance with the +, – polarity indication. (The non-polar type can be used with the connections made either way.)
- Since voltage specifications other than standard 24 V and 12 VDC do not have diodes for polarity protection, be careful not to make errors in the polarity.
- Please use caution regarding the allowable voltage fluctuation because there is about a 1 volt drop for a valve with polarity protection. (For details, refer to the solenoid specifications for the individual valve.)
- When wiring is done at the factory, positive (+) is red and negative (–)

■ With power saving circuit

Power consumption is decreased by 1/4 by reducing the wattage required to hold the valve in an energised state. (Effective energising time is over 62 ms at 24 VDC.)

Electric circuit (with power saving circuit)

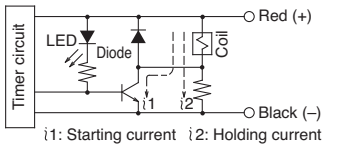

i1: Starting current i2: Holding current

Operating Principle

With the above circuit, the current consumption when holding is reduced to save energy. Please refer to the electric wave data below.

- Please be careful not to reverse the polarity, since a diode to prevent the reversed current is not provided for the power saving circuit.
- Please use caution regarding the allowable voltage fluctuation because there is about a 0.5 volt drop due to the transistor. (For details, refer to the solenoid specifications for the individual valve.)

(In the case of SY$^{3}_{5}_{9}$0T, the electric wave form of energy saving type)**

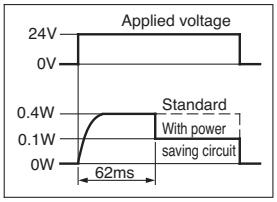

SMC

Specific Product Precautions 3

Be sure to read this before handling the products. For safety instructions and 3/4/5-port solenoid valve precautions, refer to the "Handling Precautions for SMC Products" and the "Operation Manual" on the SMC website: https://www.smc.eu

Surge Voltage Suppressor

DIN Terminal

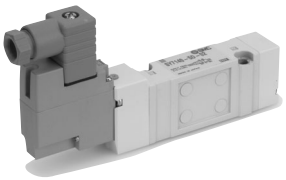

With surge voltage suppressor (DS)

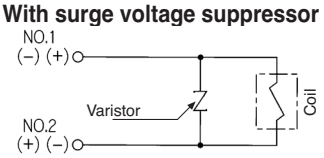

With light/surge voltage suppressor (DZ)

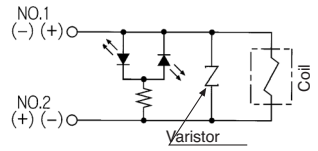

DIN terminal has no polarity.

M8 Connector

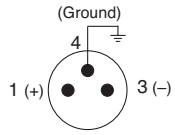

Solenoid valve side pin wiring diagram (For W type)

■ Standard type (without polarity)

With surge voltage suppressor (□S)

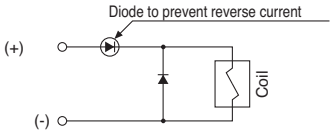

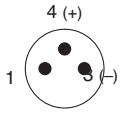

Solenoid valve side pin wiring diagram (For WA type)

With light/surge voltage suppressor (□Z)

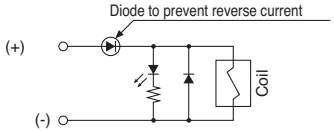

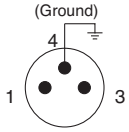

Solenoid valve side pin wiring diagram (For W type)

■ Non-polar type

With surge voltage suppressor (□R)

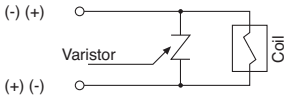

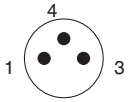

Solenoid valve side pin wiring diagram (For WA type)

With light/surge voltage suppressor (□U)

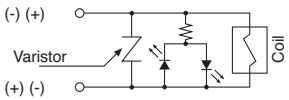

- In the case of standard type, connect + to 1 and – to 3 for W type, and connect + to 4 and - to 3 for WA type, according the polarity.
- For DC voltages other than 12 V and 24 V, incorrect wiring will case damage to the surge suppressor circuit.
- Please use caution regarding the allowable voltage fluctuation because there is about a 1 volt drop for a valve with polarity protection. (For details, refer to the solenoid specifications for the individual valve.)

Plug-in

Circuit for non-polar (FU)

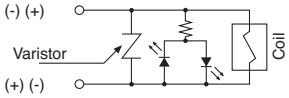

Plug-in valve has no polarity, so its possible to use for both manifold bases for positive (SS5Y$^{3}_{5}$-45□) and negative its common (SS5Y$^{3}_{5}$-45N□) types.

<For AC>

(There is no "S" option, because the generation of surge voltage is prevented by a rectifier.)

DIN Terminal

With light (DZ)

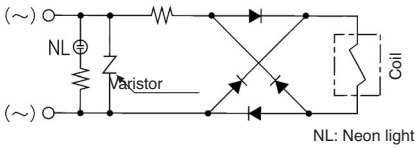

Note) Surge voltage suppressor of varistor has residual voltage corresponding to the protective element and rated voltage; therefore, protect the controller side from the surge voltage. The residual voltage of the diode is approximately 1 V.

SY Series
Specific Product Precautions 3-1

Be sure to read this before handling the products. For safety instructions and 3/4/5-port solenoid valve precautions, refer to the "Handling Precautions for SMC Products" and the "Operation Manual" on the SMC website: https://www.smc.eu

Continuous Duty

⚠Caution

If a valve is energized continuously for a long period of time, the rise in temperature due to heat-up of the coil assembly may cause a decline in solenoid valve performance, reduce service life, or have adverse effects on peripheral equipment. In particular, if 3 or more adjacent stations on the manifold are energized simultaneously for extended periods of time, take special care as the temperature rise will be greater. In such cases, if it is possible to select a valve with a power-saving circuit, be sure to do so.

UL Approved Product

⚠Caution

When conformity to UL is required, the product should be used with a UL1310 Class 2 power supply.

The product is a UL approved product only if it has a c UL us mark on the body.

Specific Product Precautions 4

Be sure to read this before handling the products. For safety instructions and 3/4/5-port solenoid valve precautions, refer to the "Handling Precautions for SMC Products" and the "Operation Manual" on the SMC website: https://www.smc.eu

Plug Connector Lead Wire Length

⚠Caution

Standard length is 300mm, but the following lengths are also available.

How to Order Connector Assembly

For DC: **SY100−30−4A−□**

Without lead wire: **SY100−30− A**

(with connector and 2 of sockets only)

• How to Order

Specify the part numbers of the solenoid valve without connector and the connector assembly with protective cover separately.

<Example> Lead wire length 2000 mm

For DC

SY3120-5LO-M5

SY100-30-4A-20

Lead wire length

-	300 mm
6	600 mm
10	1000 mm
15	1500 mm
20	2000 mm
25	2500 mm
30	3000 mm
50	5000 mm

How to Use DIN Terminal

⚠Caution

Connection

1. Loosen the holding screw and pull the connector out of the solenoid valve terminal block.
2. After removing the holding screw, insert a flat head screwdriver, etc. into the notch on the bottom of the terminal block and pry it open, separating the terminal block and the housing.
3. Loosen the terminal screws (slotted screws) on the terminal block, insert the cores of the lead wires into the terminals according to the connection method, and fasten them securely with the terminal screws.
4. Secure the cord by fastening the ground nut.

⚠Caution

When making connections, take note that using other than the supported size (ø3.5 to ø7) heavy duty cord will not satisfy IP65 (enclosure) standards. Also, be sure to tighten the ground nut and holding screw within their specified torque ranges.

Changing the entry direction

After separating the terminal block and housing, the cord entry can be changed by attaching the housing in the desired direction (4 directions at 90 intervals).

* When equipped with a light, be careful not to damage the light with the cord's lead wires.

Precautions

Plug in and pull out the connector vertically without tilting to one side.

Compatible cable

Cord O.D.: ø3.5 to ø7

(Reference) 0.5mm², 2-core or 3-core, equivalent to JIS C 3306

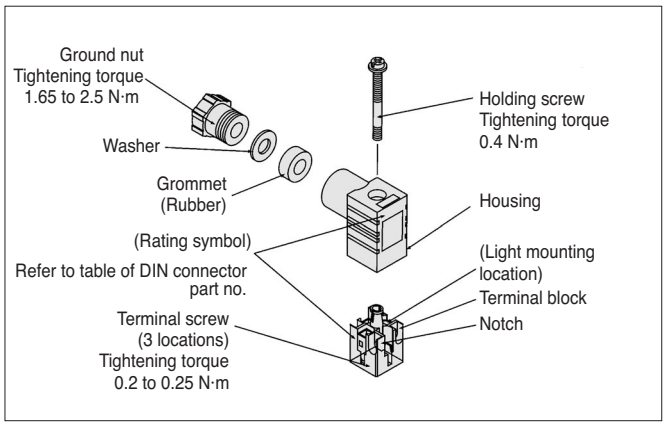

Series SY
Specific Product Precautions 5

Be sure to read this before handling the products. For safety instructions and 3/4/5-port solenoid valve precautions, refer to the "Handling Precautions for SMC Products" and the "Operation Manual" on the SMC website: https://www.smc.eu

Series SY300, SY3000 How to Use DIN Terminal Connector

⚠Caution

- SMC can provide a DIN style terminal connector (body ported type, sub-plate type) for the series SY300 and SY3000. This cannot be assembled to a standard manifold since the DIN connector width (15.8mm) exceeds that of the valve body (10mm). Contact SMC if you wish to use with a manifold. Please also note: that brackets F1, F2 cannot be mounted.

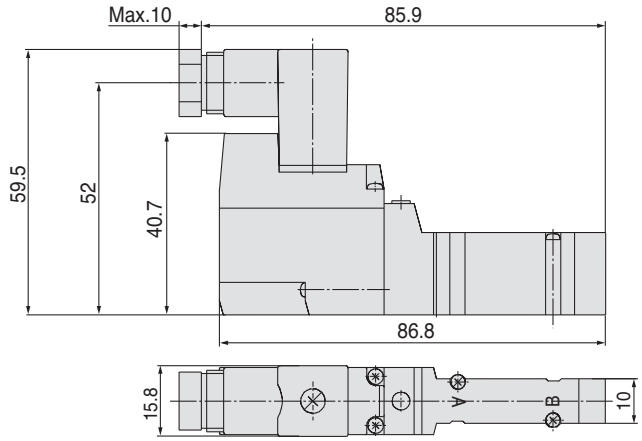

DIN Connector Part No.

⚠Caution

Without light	SY100-61-1

With light

Rated voltage	Voltage symbol	No.
24 VDC	24 V	SY100-61-3-05
12 VDC	12 V	SY100-61-3-06
100 VAC	100 V	SY100-61-2-01
200 VAC	200 V	SY100-61-2-02
110 VAC	110 V	SY100-61-2-03
220 VAC	220 V	SY100-61-2-04

Circuit Diagram with Light

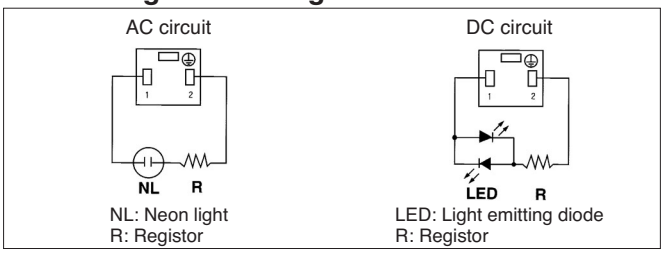

Note) Refer to page 212 for DIN connector (Y) conforming to EN-175301-803C (former DIN 43650C).

Connector Assembly with Cover

⚠Caution

Connector assembly with dust proof protective cover.

- Effective to prevention of short circuit failure due to the entry of foreign matter into the connector.
- Chloroprene rubber for electrical use, which provides outstanding weather resistance and electrical insulation, is used for the cover material. However, do not allow contact with cutting oil, etc.
- Simple and unencumbered appearance by adopting round-shaped cord.

How to Order

SY100-68-A-□

● Lead wire length (L)

-	300 mm
6	600 mm
10	1000 mm
15	1500 mm
20	2000 mm
25	2500 mm
30	3000 mm
50	5000 mm

Connector Assembly with Cover: Dimensions

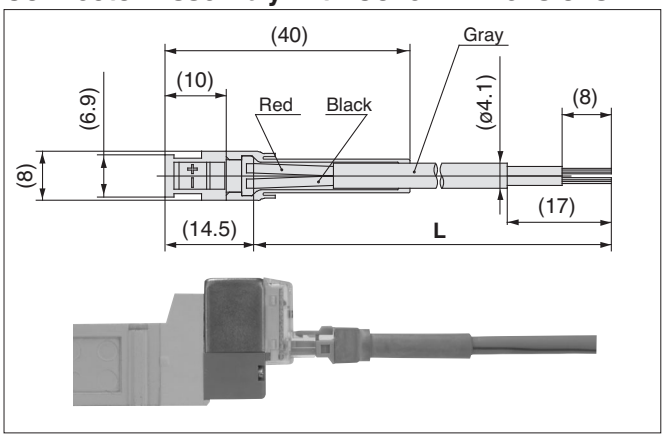

How to Order

Enter the part number for a plug connector solenoid valve without connector together with the part number for a connector assembly with cover.

<Example 1> Lead wire length of 2000 mm
SY3120-5LOZ-M5-Q
SY100-68-A-20

<Example 2> Lead wire length of 300 mm (standard)
SY3120-5LPZ-M5-Q
Symbol for connector assembly with cover

∗ In this case, the part number for the connector assembly with cover is not required.

Specific Product Precautions 2

Be sure to read this before handling the products. For safety instructions and 3/4/5-port solenoid valve precautions, refer to the "Handling Precautions for SMC Products" and the "Operation Manual" on the SMC website: https://www.smc.eu

Plug-in

⚠Caution

■ When using a double solenoid valve (Dual body type: SY$^{3}_{5}$245-□FU) on the plug-in style manifold (SS5Y$^{3}_{5}$45(N)□), two manifold stations are required per valve.

Output to A/B ports will be made through the manifold block on the side indicated by an arrow on the top of the solenoid valve. Therefore, arrange the piping on the side indicated by the arrow.

Although the "T" side will not be used, plugs will not be necessary since it is sealed with the valve.

(However, insert a plug into the A/B ports if dust intrusion is possible. Refer to page 138.)

Manifold valve

SS5Y$^{3}_{5}$-45 (N)□

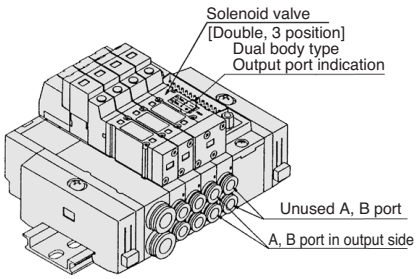

Plug-in type solenoid valves consist of a non-polar solenoid valve and a plug-in socket. When ordering them separately, refer to the following part numbers.

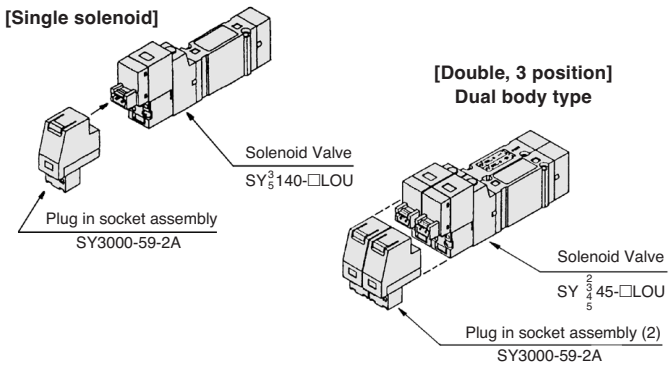

Note) Using a valve other than a non-polar type may cause trouble.

DIN Rail for Series SY7000/9000

⚠Caution

The DIN rail used with Series SY7000 and SY9000 is stronger than that used with Series SY3000 and SY5000. Use this exclusive DIN rail with Series SY7000 and SY9000. Furthermore, if using a DIN rail other than that supplied by SMC, refer to the manifold mounting section below, and mount using the same method as prescribed for side facing and rear facing, regardless of the mounting orientation.

Manifold Mounting

⚠Caution

1. For Type 23, 43, 45, 45□ and 60 DIN rail mounting, when attaching a manifold to a mounting surface, etc., with bolts, if the entire bottom surface of the DIN rail contacts the mounting surface in a horizontal mounting, it can be used by simply securing both ends of the DIN rail. However, for any other mounting method or for side facing and rear facing, etc., secure the DIN rail with bolts at uniform intervals using the following as a guide: 2 to 5 stations at 2 locations, 6 to 10 stations at 3 locations, 11 to 15 stations at 4 locations, and 16 to 20 stations at 5 locations. In addition, even in the case of a horizontal mounting, if the mounting surface is subject to vibration, etc., take the same measures indicated above. If secured at fewer than the specified number of locations, warping or twisting may occur in the DIN rail and manifold, causing trouble such as air leakage.

   Also, when using mounting screws for the DIN rail on the bottom side (L3 dimension in the dimension table) of the manifold valve body, the height of the screw head has to be as follows.

   Type 23, 43 (SY9000): 8 mm or less
   Type 45 (SY3000, 5000): 5.8 mm or less
   For type 60:
   SY3000: 4.7 mm or less
   SY5000: 5.8 mm or less
   SY7000: 8 mm or less

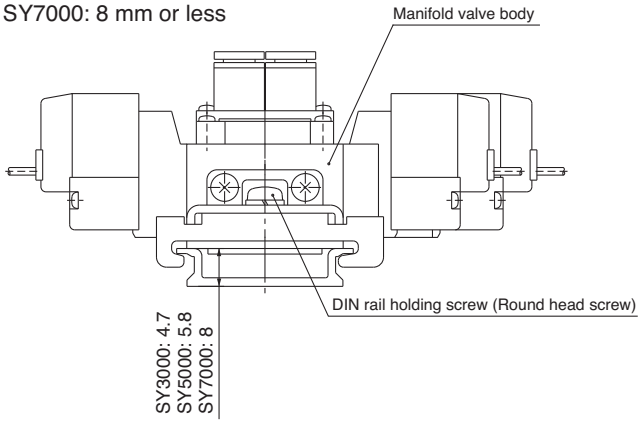

[This is the case for type 60.]

2. There will be slight variations in the width of manifold blocks due to tolerance (±0.15 mm) for the stacking manifold type of the SS5Y9-23 series and SS5Y9-43 series.

   As the manifold is made up of a combination of manifold blocks, there will be an error due to accumulated tolerance between the actual pitch dimensions of the mounting holes used to secure the manifold and the values stated in the catalog. Keep this in mind when increasing the number of stations.

Series SY
Specific Product Precautions 7

Be sure to read this before handling the products. For safety instructions and 3/4/5-port solenoid valve precautions, refer to the "Handling Precautions for SMC Products" and the "Operation Manual" on the SMC website: https://www.smc.eu

One-touch Fittings

⚠Caution

When fittings are used, they may interfere with one another depending on their types and sizes. Therefore, the dimensions of the fittings to be used should first be confirmed in their respective catalogues.

- **Tubing attachment/detachment for One-touch fittings**

1) Attaching of tubing

1. Take a tubing having no flaws on its periphery and cut it off at a right angle. When cutting the tubing, use tubing cutters TK-1, 2 or 3. Do not use pinchers, nippers or scissors, etc. If cutting is done with tools other than tubing cutters, the tubing may be cut diagonally or become flattened, etc., making a secure installation impossible, and causing problems such as the tubing pulling out after installation or air leakage. Allow some extra length in the tubing.
2. Grasp the tubing and push it in slowly, inserting it securely all the way into the fitting.
3. After inserting the tubing, pull on it lightly to confirm that it will not come out. If it is not installed securely all the way into the fitting, this can cause problems such as air leakage or the tubing pulling out.

2) Detaching of tubing

1. Push in the release button sufficiently, pushing its collar equally around the circumference.
2. Pull out the tubing while holding down the release button so that it does not come out. If the release button is not pressed down sufficiently, there will be increased bite on the tubing and it will become more difficult to pull it out.
3. When the removed tubing is to be used again, cut off the portion which has been chewed before reusing it. If the chewed portion of the tubing is used as is, this can cause trouble such as air leakage or difficulty in removing the tubing.

- The pitch determined for each of the series SY piping ports (A, B, etc.) is based on the assumption that series KJ one-touch fittings will be used. For this reason, other pipe fittings may interfere with each other depending on their type and size. Dimensions should be confirmed in a pipe fitting catalogue before they are used.

Other Tubing Brands

⚠Caution

1. When using other than SMC brand tubing, confirm that the following specifications are satisfied with respect to the outside diameter tolerance of the tubing.

1) Nylon tubing	within 0.1 mm
2) Soft nylon tubing	within 0.1 mm
3) Polyurethane tubing	within +0.15 mm, within –0.2 mm.

Do not use tubing which do not meet these outside diameter tolerances. It may not be possible to connect them, or they may cause other trouble, such as air leakage or the tubing pulling out after connection.

M8 Connector

⚠Caution

1. M8 connector types have an IP65 (enclosure) rating, offering protection from dust and water. However please note: these products are not intended for use in water. Select a SMC connector cable (V100-49-1-□) or a FA sensor type connector, with M8 threaded 3 pin specifications conforming to Nippon Electric Control Equipment Association Standard, NECA4202 (IEC60947-5-2). Make sure the connector O.D. is 10.5mm or less when used with the Series SY3000 manifold. If more than 10.5mm, it cannot be mounted due to the size.
2. Do not use a tool to mount the connector, as this may cause damage. Only tighten by hand. (0.4 to 0.6 N·m)
3. The excessive stress on the cable connector will not be able to satisfy the IP65 rating. Please use caution and do not apply a stress of 30 N or greater.

⚠ Caution

Failure to meet IP65 performance may result if using alternative connectors than those shown above, or when insufficiently tightened.

Connector cable mounting

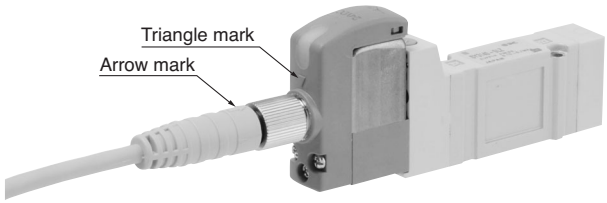

Note) Connector cable should be mounted in the correct direction. Make sure that the arrow symbol on the connector is facing the triangle symbol on the valve when using SMC connector cable (V100-49-1-□).

Be careful not to squeeze it in the wrong direction, as problems such as pin damage may occur.

Specific Product Precautions 8

Be sure to read this before handling the products. For safety instructions and 3/4/5-port solenoid valve precautions, refer to the "Handling Precautions for SMC Products" and the "Operation Manual" on the SMC website: https://www.smc.eu

M8 Connector

⚠Caution

■ Connector cable

- Connector cable for M8 can be ordered as follows:

How to Order

1. To order solenoid valve and connector cable at the same time.
   (Connector cable will be included in the shipment of the solenoid valve.)

SY3/5/7/9□□□–□W□1–□□ -Q

IEC Standards compliant

—	None
A	IEC60947-2 compliant

Cable length (mm)

Symbol	Cable length (mm)
1	300
2	500
3	1000
4	2000
5	3000
6	4000
7	5000

Ex. 1) Cable length: 300mm

SY312-5W1ZE-C4

• Symbol for electrical entry

2. To order connector cable only

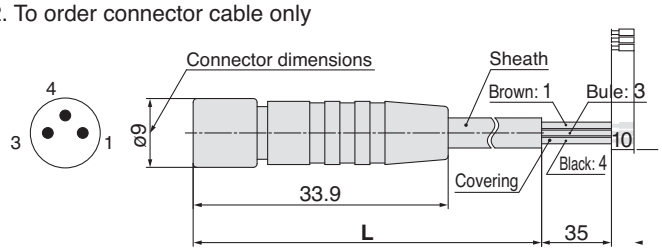

Cable length (L)	No.
300 mm	V100-49-1-1
500 mm	V100-49-1-2
1000 mm	V100-49-1-3
2000 mm	V100-49-1-4
5000 mm	V100-49-1-7

Sheath O.D.	ø3.4 mm
Cover diameter	ø1.16 mm
Conductor area	0.16 mm²

[Dimensions when installed]

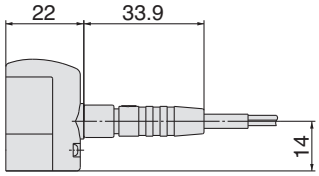

Solenoid Valve Mounting

⚠Caution

Mount it so that there is no slippage or deformation in gaskets, and tighten with the tightening torque as shown below.

Model	Thread size	Tightening torque
SY3000	M2	0.16 N·m
SY5000	M3	0.8 N·m
SY7000	M4	1.4 N·m
SY9000	M3	0.8 N·m

Replacement of Pilot Valve

⚠Caution

Pilot valves in this series are improved to provide excellent energy saving results. However following this improvement, these new valves are no longer compatible with the conventional pilot valve used at the interface. Consult with SMC when you need to exchange these pilot valves, in the case of manual override (marked in orange) of the adapter plate.

New type

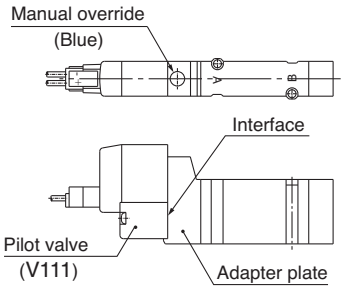

Conventional type

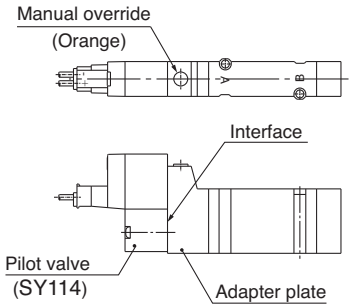

Specific Product Precautions 9

Be sure to read this before handling the products. For safety instructions and 3/4/5-port solenoid valve precautions, refer to the "Handling Precautions for SMC Products" and the "Operation Manual" on the SMC website: https://www.smc.eu

Interface Regulator

⚠Caution

Specifications

Interface regulator model		ARBY3000-□-P-2	ARBY3000-□-$^{A1}_{B1}$-2		ARBY5000-□-P-2	ARBY5000-□-$^{A1}_{B1}$-2		ARBY7000-□-P-2	ARBY7000-□-$^{A1}_{B1}$-2	
Applicable solenoid valve model		SY3□40(R)			SY5□40(R)			SY7□40(R)		
Regulated port		P	A	B	P	A	B	P	A	B
Set pressure range		0.1 to 0.7 MPa								
Maximum operating pressure		0.7 MPa								
Fluid		Air								
Ambient and fluid temperature		Max. 50C								
Connection port of pressure gauge		M5								
Weight W (g)	With pressure gauge	46 g (05), 50 g (06)			66.8 g			110.8 g		
	With plug	20 g			60.4 g			103.2 g		
Supply side effective area Note 3)	P→A,B	—	2.45 mm²		—	7.61 mm²		—	13.54 mm²	
Exhaust side effective area Note 3)	A,B→EA,EB	4.05 mm²	3.91 mm²		11.1 mm²	10.1 mm²		15.71 mm²	15.71 mm²	

Note 1) Pressurise the interface regulator from P port on the base.
Note 2) With closed center and pressure center valves, the pressure can be regulated through P port only.
Note 3) Effective area, excluding the regulated port, when a primary pressure of 0.5 MPa is supplied with regulators mounted on the solenoid valves (2 positions) and sub-plate. Refer to "Flow Characteristics" regarding the regulated port.
Note 4) Valves for weight include gasket and mounting screws.
Note 5) With A, B ports regulated (P port controlled A, B ports regulated), the effective area (Cv factor) for the regulated port and unregulated passage (P to B or P to A) decreases as shown in the graph below when the set pressure is 0.25 MPa or less.

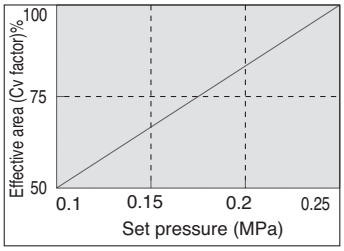

JIS Symbol

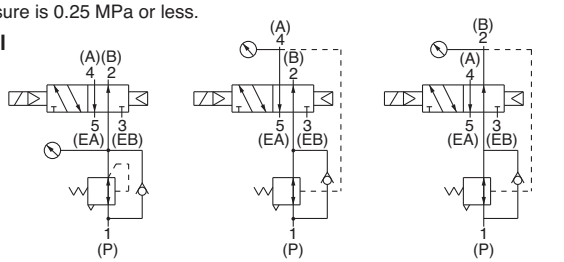

P port regulated | **A port regulated (P controlled, A port regulated)** | **B port regulated (P controlled, B port regulated)**

How to Order Interface Regulator

ARBY3000 — 05 — P — 2

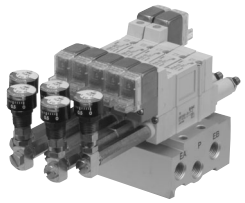

Regulated port

P	P port
A1	A port (P controlled, A port regulated)
B1	B port (P controlled, B port regulated)

Pressure gauge connection port

05	Pressure gauge (G15-10-01) [for odd number stations]
06	Pressure gauge (G15-10-01) [for even number stations]
M1	Plug (M-5P)

Note) For series ARBY3000 with pressure gauge, note that the part numbers for odd number and even number stations differ to prevent interference between the pressure gauges when installing on the manifold.

ARBY5000 — 00 — P — 2

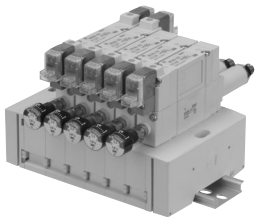

Regulated port

P	P port
A1	A port (P controlled, A port regulated)
B1	B port (P controlled, B port regulated)

Pressure gauge connection port

00	Pressure gauge (G15-10-01)
M1	Plug (M-5P)

ARBY7000 — 00 — P — 2

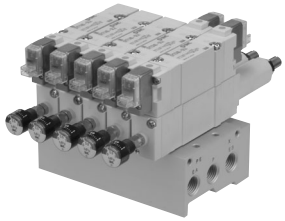

Regulated port

P	P port
A1	A port (P controlled, A port regulated)
B1	B port (P controlled, B port regulated)

Pressure gauge connection port

00	Pressure gauge (G15-10-01)
M1	Plug (M-5P)

Specific Product Precautions 10

Be sure to read this before handling the products. For safety instructions and 3/4/5-port solenoid valve precautions, refer to the "Handling Precautions for SMC Products" and the "Operation Manual" on the SMC website: https://www.smc.eu

Flow Characteristics

(Conditions: Inlet pressure 0.7 MPa when 2 position solenoid valve is mounted.)

ARBY3000

P port regulated (P→A, B)

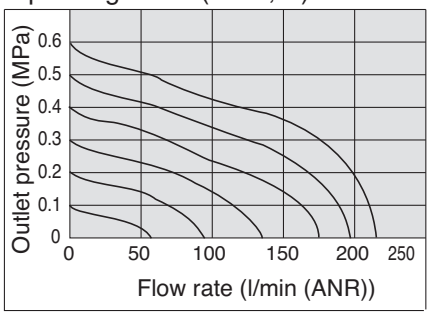

A1 port regulated (P→A),
B1 port regulated (P→B)

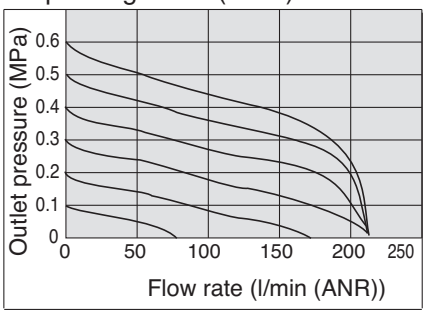

ARBY5000

P port regulated (P→A, B)

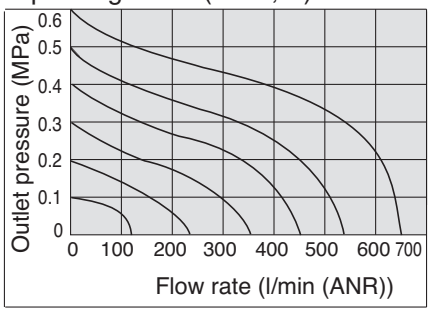

A1 port regulated (P→A),
B1 port regulated (P→B)

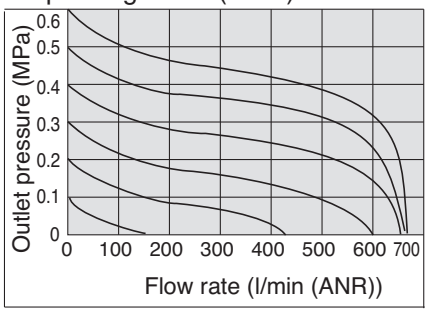

ARBY7000

P port regulated (P→A, B)

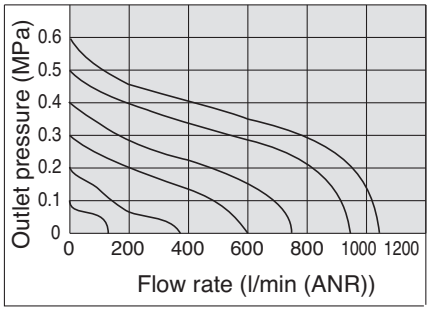

A1 port regulated (P→A),
B1 port regulated (P→B)

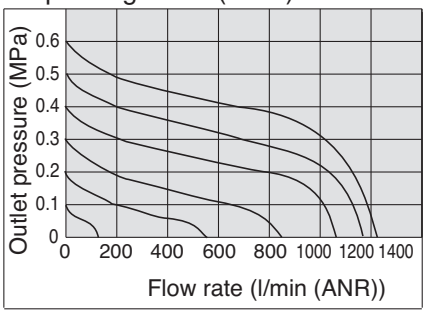

■**Trademark**
DeviceNet® is a registered trademark of ODVA, Inc.

⚠ Safety Instructions

These safety instructions are intended to prevent hazardous situations and/or equipment damage. These instructions indicate the level of potential hazard with the labels of **"Caution," "Warning"** or **"Danger."** They are all important notes for safety and must be followed in addition to International Standards (ISO/IEC) [1)], and other safety regulations.

⚠ **Caution:**	**Caution** indicates a hazard with a low level of risk which, if not avoided, could result in minor or moderate injury.
⚠ **Warning:**	**Warning** indicates a hazard with a medium level of risk which, if not avoided, could result in death or serious injury.
⚠ **Danger:**	**Danger** indicates a hazard with a high level of risk which, if not avoided, will result in death or serious injury.

1) ISO 4414: Pneumatic fluid power – General rules relating to systems.
ISO 4413: Hydraulic fluid power – General rules relating to systems.
IEC 60204-1: Safety of machinery – Electrical equipment of machines. (Part 1: General requirements)
ISO 10218-1: Manipulating industrial robots - Safety.
etc.

⚠ Warning

1. The compatibility of the product is the responsibility of the person who designs the equipment or decides its specifications.
Since the product specified here is used under various operating conditions, its compatibility with specific equipment must be decided by the person who designs the equipment or decides its specifications based on necessary analysis and test results. The expected performance and safety assurance of the equipment will be the responsibility of the person who has determined its compatibility with the product. This person should also continuously review all specifications of the product referring to its latest catalogue information, with a view to giving due consideration to any possibility of equipment failure when configuring the equipment.

2. Only personnel with appropriate training should operate machinery and equipment.
The product specified here may become unsafe if handled incorrectly. The assembly, operation and maintenance of machines or equipment including our products must be performed by an operator who is appropriately trained and experienced.

3. Do not service or attempt to remove product and machinery/ equipment until safety is confirmed.
1. The inspection and maintenance of machinery/equipment should only be performed after measures to prevent falling or runaway of the driven objects have been confirmed.
2. When the product is to be removed, confirm that the safety measures as mentioned above are implemented and the power from any appropriate source is cut, and read and understand the specific product precautions of all relevant products carefully.
3. Before machinery/equipment is restarted, take measures to prevent unexpected operation and malfunction.

4. Contact SMC beforehand and take special consideration of safety measures if the product is to be used in any of the following conditions.
1. Conditions and environments outside of the given specifications, or use outdoors or in a place exposed to direct sunlight.
2. Installation on equipment in conjunction with atomic energy, railways, air navigation, space, shipping, vehicles, military, medical treatment, combustion and recreation, or equipment in contact with food and beverages, emergency stop circuits, clutch and brake circuits in press applications, safety equipment or other applications unsuitable for the standard specifications described in the product catalogue.
3. An application which could have negative effects on people, property, or animals requiring special safety analysis.
4. Use in an interlock circuit, which requires the provision of double interlock for possible failure by using a mechanical protective function, and periodical checks to confirm proper operation.

⚠ Caution

1. The product is provided for use in manufacturing industries.
The product herein described is basically provided for peaceful use in manufacturing industries.
If considering using the product in other industries, consult SMC beforehand and exchange specifications or a contract if necessary.
If anything is unclear, contact your nearest sales branch.

Limited warranty and Disclaimer/Compliance Requirements

The product used is subject to the following "Limited warranty and Disclaimer" and "Compliance Requirements".Read and accept them before using the product.

Limited warranty and Disclaimer

1. The warranty period of the product is 1 year in service or 1.5 years after the product is delivered, whichever is first. [2)] Also, the product may have specified durability, running distance or replacement parts. Please consult your nearest sales branch.
2. For any failure or damage reported within the warranty period which is clearly our responsibility, a replacement product or necessary parts will be provided. This limited warranty applies only to our product independently, and not to any other damage incurred due to the failure of the product.
3. Prior to using SMC products, please read and understand the warranty terms and disclaimers noted in the specified catalogue for the particular products.

2) Vacuum pads are excluded from this 1 year warranty.
A vacuum pad is a consumable part, so it is warranted for a year after it is delivered. Also, even within the warranty period, the wear of a product due to the use of the vacuum pad or failure due to the deterioration of rubber material are not covered by the limited warranty.

Compliance Requirements

1. The use of SMC products with production equipment for the manufacture of weapons of mass destruction (WMD) or any other weapon is strictly prohibited.
2. The exports of SMC products or technology from one country to another are governed by the relevant security laws and regulations of the countries involved in the transaction. Prior to the shipment of a SMC product to another country, assure that all local rules governing that export are known and followed.

⚠ Caution

SMC products are not intended for use as instruments for legal metrology.
Measurement instruments that SMC manufactures or sells have not been qualified by type approval tests relevant to the metrology (measurement) laws of each country.
Therefore, SMC products cannot be used for business or certification ordained by the metrology (measurement) laws of each country.

SMC Corporation (Europe)

Austria	+43 (0)2262622800	www.smc.at	office@smc.at
Belgium	+32 (0)33551464	www.smc.be	info@smc.be
Bulgaria	+359 (0)2807670	www.smc.bg	office@smc.bg
Croatia	+385 (0)13707288	www.smc.hr	office@smc.hr
Czech Republic	+420 541424611	www.smc.cz	office@smc.cz
Denmark	+45 70252900	www.smcdk.com	smc@smcdk.com
Estonia	+372 651 0370	www.smcee.ee	info@smcee.ee
Finland	+358 207513513	www.smc.fi	smcfi@smc.fi
France	+33 (0)164761000	www.smc-france.fr	supportclient@smc-france.fr
Germany	+49 (0)61034020	www.smc.de	info@smc.de
Greece	+30 210 2717265	www.smchellas.gr	sales@smchellas.gr
Hungary	+36 23513000	www.smc.hu	office@smc.hu
Ireland	+353 (0)14039000	www.smcautomation.ie	sales@smcautomation.ie
Italy	+39 03990691	www.smcitalia.it	mailbox@smcitalia.it
Latvia	+371 67817700	www.smc.lv	info@smc.lv
Lithuania	+370 5 2308118	www.smclt.lt	info@smclt.lt
Netherlands	+31 (0)205318888	www.smc.nl	info@smc.nl
Norway	+47 67129020	www.smc-norge.no	post@smc-norge.no
Poland	+48 222119600	www.smc.pl	office@smc.pl
Portugal	+351 214724500	www.smc.eu	apoioclientept@smc.smces.es
Romania	+40 213205111	www.smcromania.ro	smcromania@smcromania.ro
Russia	+7 (812)3036600	www.smc.eu	sales@smcru.com
Slovakia	+421 (0)413213212	www.smc.sk	office@smc.sk
Slovenia	+386 (0)73885412	www.smc.si	office@smc.si
Spain	+34 945184100	www.smc.eu	post@smc.smces.es
Sweden	+46 (0)86031240	www.smc.nu	smc@smc.nu
Switzerland	+41 (0)523963131	www.smc.ch	info@smc.ch
Turkey	+90 212 489 0 440	www.smcturkey.com.tr	satis@smcturkey.com.tr
UK	+44 (0)845 121 5122	www.smc.uk	sales@smc.uk
South Africa	+27 10 900 1233	www.smcza.co.za	zasales@smcza.co.za

Printing BP 00 Printed in Spain

Specifications are subject to change without prior notice and any obligation on the part of the manufacturer