Electric Actuator
High Rigidity and High Precision Slider Type

New

CE

RoHS

Circular arc grooves allow for high rigidity and high precision.

Moment resistance[*1 *2]
Improved by up to **61 %**

Table displacement[*1]
Reduced by up to **50 %**

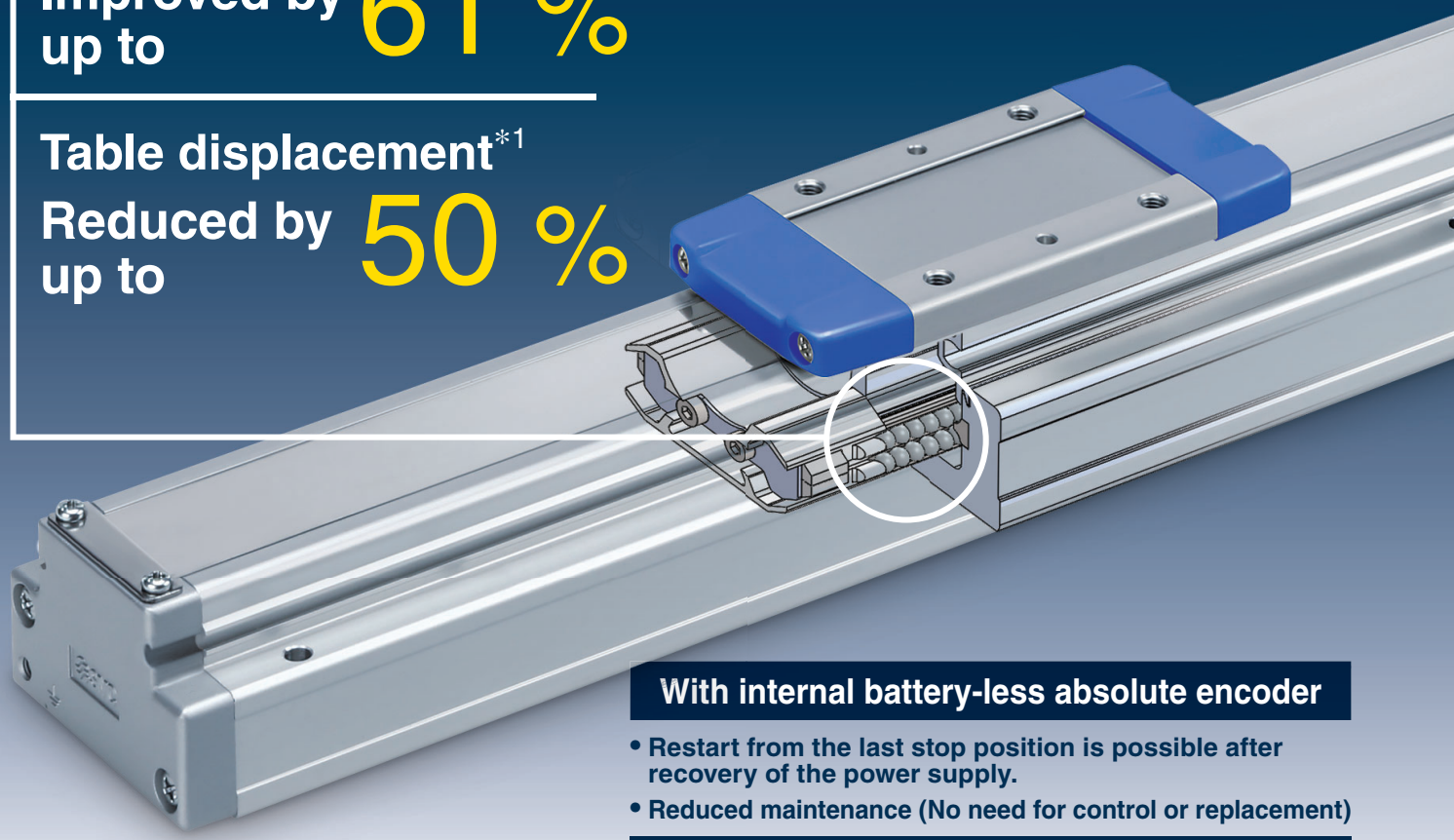

With internal battery-less absolute encoder

- Restart from the last stop position is possible after recovery of the power supply.
- Reduced maintenance (No need for control or replacement)

Positioning repeatability: ±0.01 mm[*3]

*1 Compared with the LEFS
*2 Size 40, Mep, Overhang: 300 mm
*3 Excludes the lead H

Step Motor Controller JXC Series p. 3

c UL us

Battery-less Absolute Type (Step Motor 24 VDC)

■ **Direct input type**
<Applicable network> EtherCAT EtherNet/IP PROFINET DeviceNet IO-Link CC-Link

■ **Step data input type**

LEKFS Series

SMC

P-EU21-6-UK

With a 4-row circular arc on each side for high rigidity and high precision (zero clearance)

Improved moment resistance

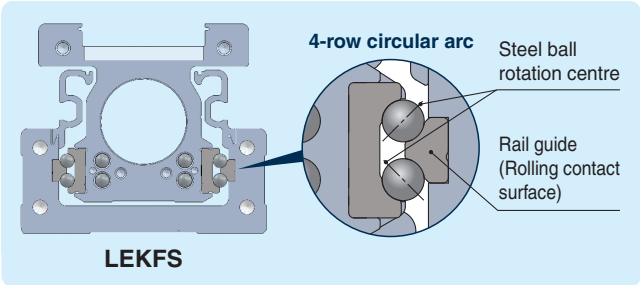

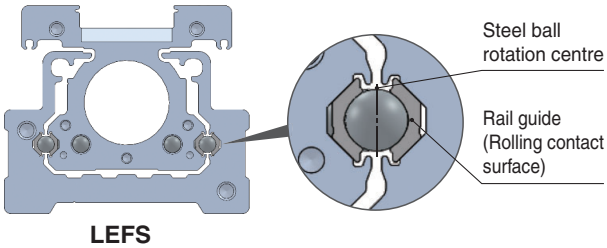

Improved Dynamic Allowable Moment

Size	Moment direction	Work load [kg] (Overhang: 300 mm)	
		High rigidity guide LEKFS	**LEFS**
25	Pitching (Mep)	**7.5 (10 % increase)**	6.8
32		**18 (35 % increase)**	13.3
40		**37 (61 % increase)**	23

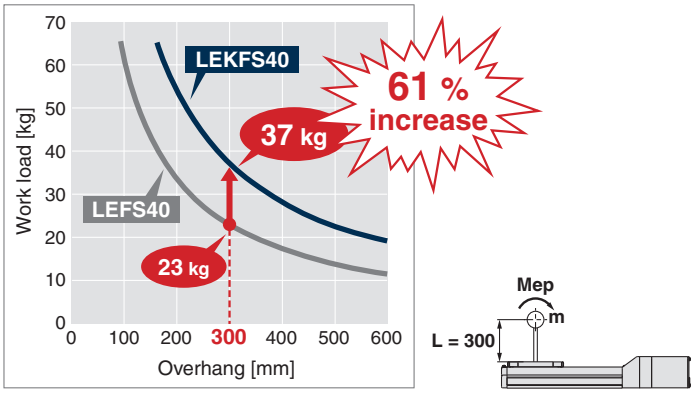

Table displacement amount reduced to 1/2

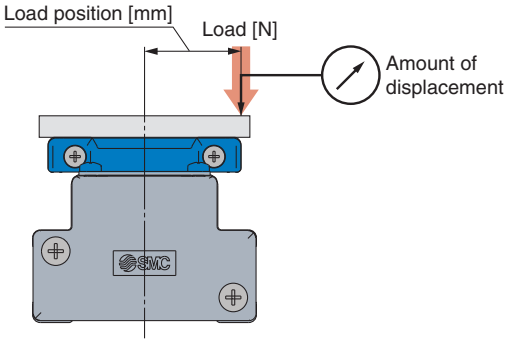

Table Displacement

Size	Table displacement [mm]		Load position [mm]	Load [N]
	High rigidity guide LEKFS	**LEFS**		
25	**0.022 (50 % reduction)**	0.044	25	200
32	**0.036 (50 % reduction)**	0.072	30	450
40	**0.027 (50 % reduction)**	0.053	37	500

Zero table clearance

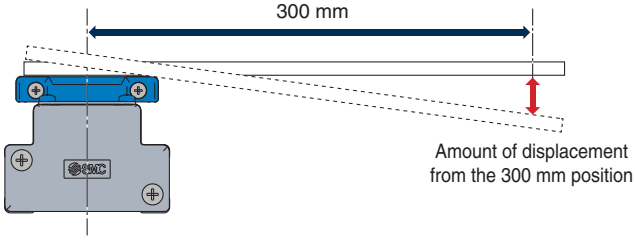

Table Clearance

Size	Displacement due to table clearance [mm]	
	High rigidity guide LEKFS	**LEFS**
25	**0**	0.079
32	**0**	0.068
40	**0**	0.052

Auto switches are mountable.

Allows for position detection of the table throughout the stroke

LEKFS32/40

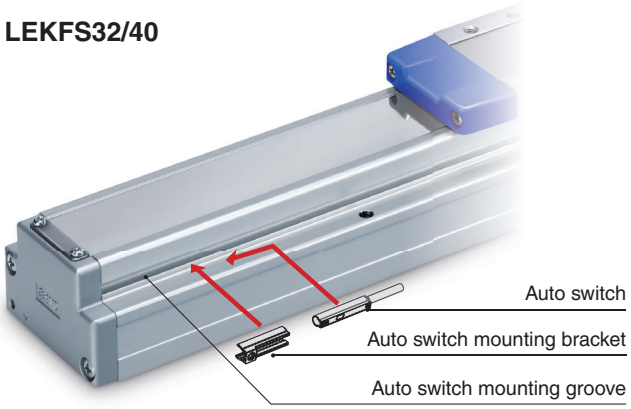

LEKFS25

Same dimensions as the LEF/Complete mounting compatibility is ensured.

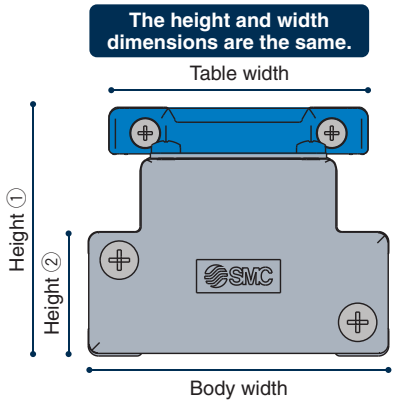

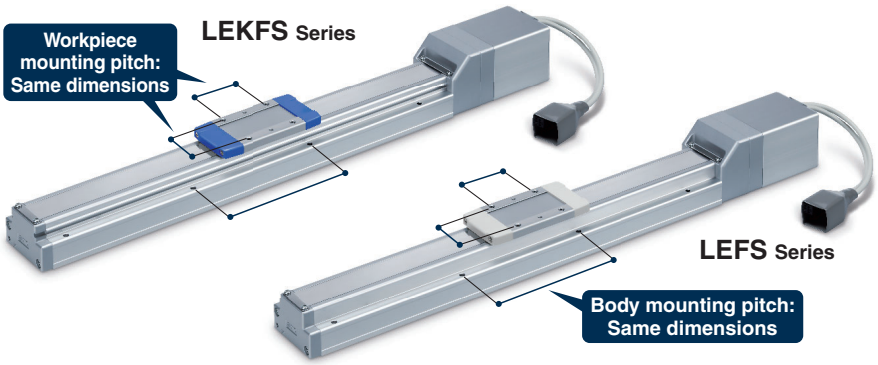

The body bottom positioning pin holes have been standardized.

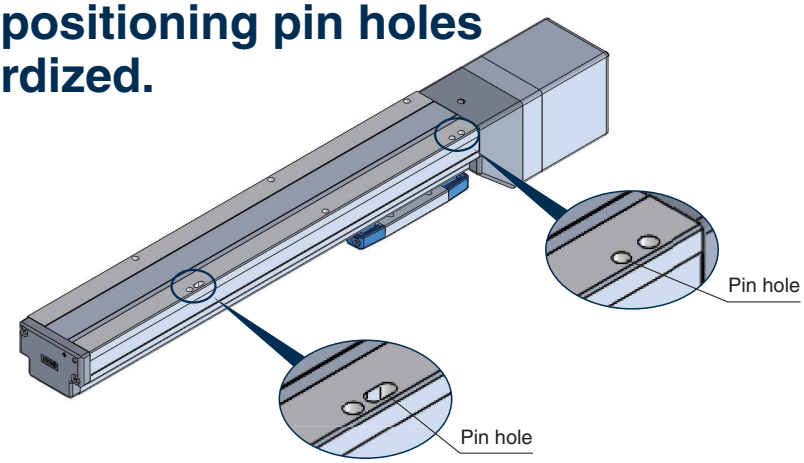

Compatible Controllers

Battery-less Absolute Type (Step Motor 24 VDC)

Step Motor Controller JXC Series

Direct input type

EtherCAT	EtherNet/IP	PROFINET	DeviceNet	IO-Link	CC-Link
					
JXCE1	JXC91	JXCP1	JXCD1	JXCL1	JXCM1

Step data input type

JXC51
JXC61

Application Examples

¡Palletizing

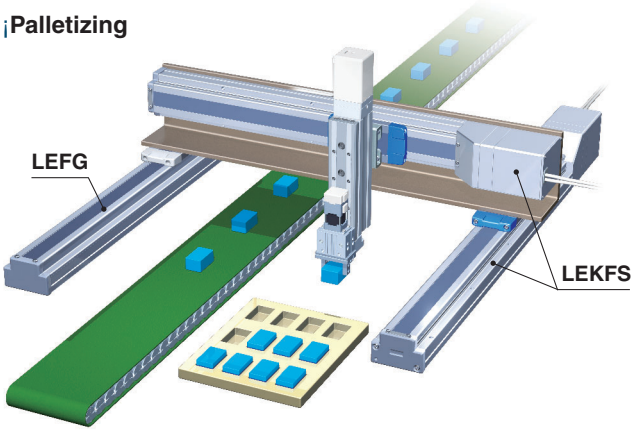

¡Positioning transfer

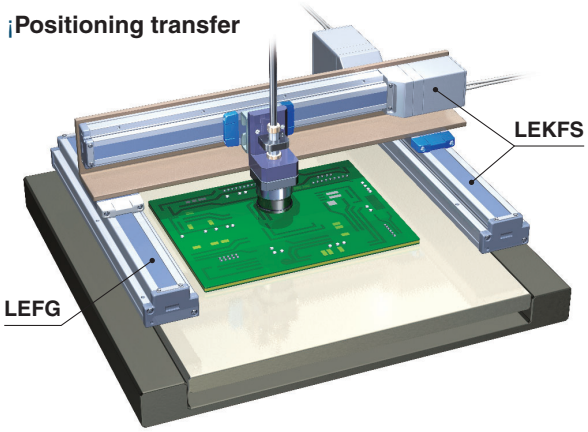

¡Coating work

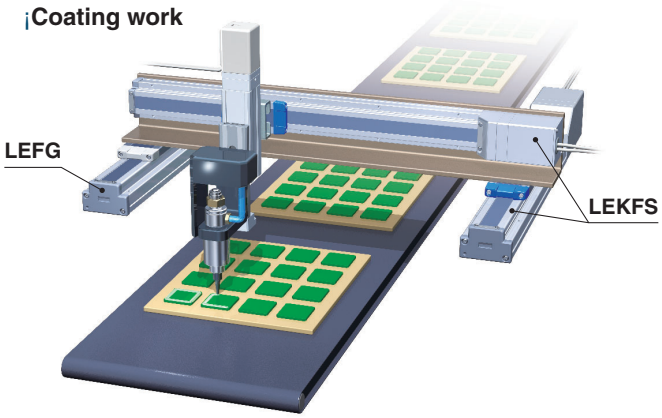

Model Selection

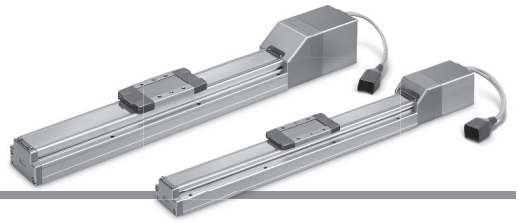

Selection Procedure

Step 1 Check the work load–speed. → **Step 2** Check the cycle time. → **Step 3** Check the allowable moment.

Selection Example

Operating conditions

- Workpiece mass: 5 [kg]
- Speed: 300 [mm/s]
- Acceleration/Deceleration: 3000 [mm/s²]
- Stroke: 200 [mm]
- Mounting orientation: Horizontal upward
- Workpiece mounting condition:

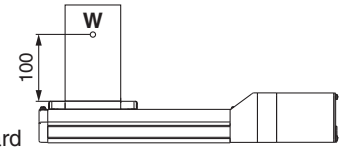

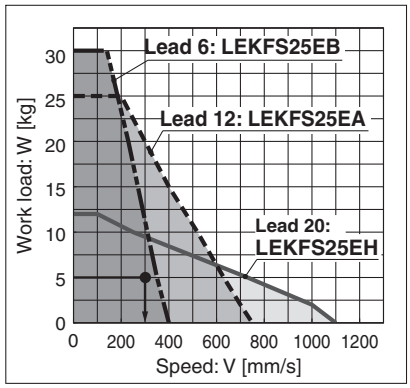

<Speed–Work load graph> (LEKFS25/Step motor)

Step 1 **Check the work load–speed. <Speed–Work load graph>** (pages 5, 6)

Select a model based on the workpiece mass and speed while referencing the speed–work load graph.

Selection example) The **LEKFS25EB-200** can be temporarily selected as a possible candidate based on the graph shown on the right side.

Step 2 **Check the cycle time.**

Calculate **the cycle time** using the following calculation method.

Cycle time:

T can be found from the following equation.

$$T = T1 + T2 + T3 + T4 \text{ [s]}$$

- T1: Acceleration time and T3: Deceleration time can be found by the following equation.

$$T1 = V/a1 \text{ [s]} \qquad T3 = V/a2 \text{ [s]}$$

- T2: Constant speed time can be found from the following equation.

$$T2 = \frac{L - 0.5 \cdot V \cdot (T1 + T3)}{V} \text{ [s]}$$

- T4: Settling time varies depending on the conditions such as motor types, load and in position of the step data. Therefore, calculate the settling time while referencing the following value.

$$T4 = 0.2 \text{ [s]}$$

Calculation example)
T1 to T4 can be calculated as follows.

$T1 = V/a1 = 300/3000 = 0.1$ [s],

$T3 = V/a2 = 300/3000 = 0.1$ [s]

$$T2 = \frac{L - 0.5 \cdot V \cdot (T1 + T3)}{V} = \frac{200 - 0.5 \cdot 300 \cdot (0.1 + 0.1)}{300} = 0.57 \text{ [s]}$$

$T4 = 0.2$ [s]

The cycle time can be found as follows.

$T = T1 + T2 + T3 + T4$
$= 0.1 + 0.57 + 0.1 + 0.2$
$=$ **0.97 [s]**

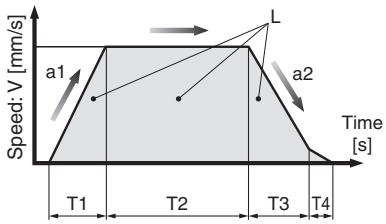

L : Stroke [mm] ··· (Operating condition)
V : Speed [mm/s] ··· (Operating condition)
a1: Acceleration [mm/s²] ··· (Operating condition)
a2: Deceleration [mm/s²] ··· (Operating condition)

T1: Acceleration time [s]
Time until reaching the set speed
T2: Constant speed time [s]
Time while the actuator is operating at a constant speed
T3: Deceleration time [s]
Time from the beginning of the constant speed operation to stop
T4: Settling time [s]
Time until positioning is completed

Step 3 **Check the allowable moment.** **<Static allowable moment>** (page 6) **<Dynamic allowable moment>** (page 7)

Confirm the moment that applies to the actuator is within the allowable range for both static and dynamic conditions.

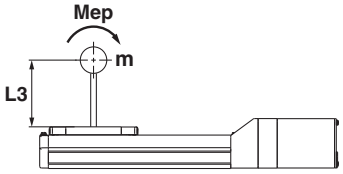

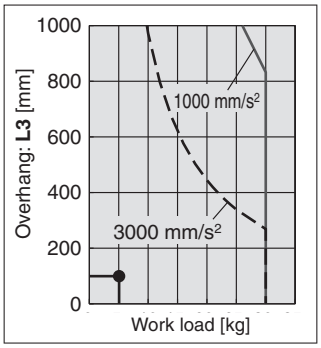

Based on the above calculation result, the LEKFS25EB-200 should be selected.

∗ If the step motor and servo motors do not meet your specifications, also consider the AC servo specification.

Speed–Work Load Graph (Guide)
For Battery-less Absolute (Step Motor 24 VDC), In-line Motor Type

∗ The following graphs show the values when the moving force is 100 %.

LEKFS25/Ball Screw Drive

Horizontal

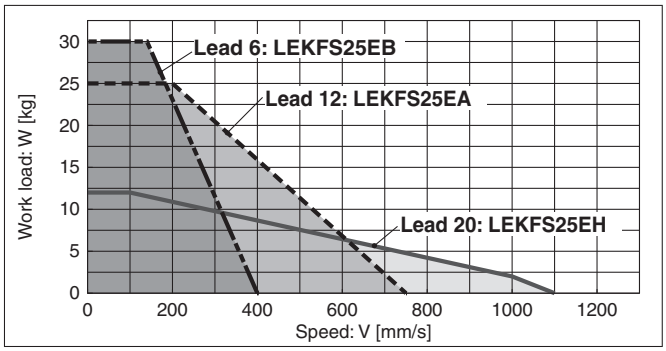

Vertical

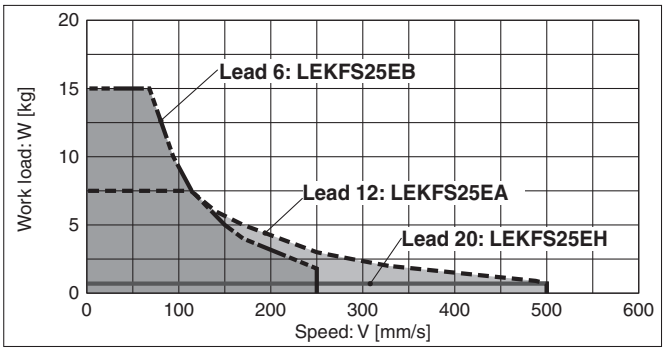

LEKFS32/Ball Screw Drive

Horizontal

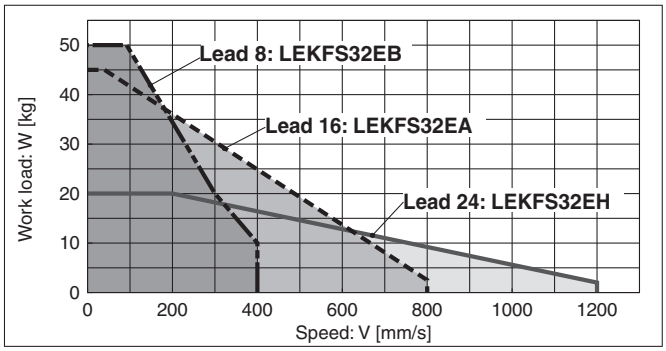

Vertical

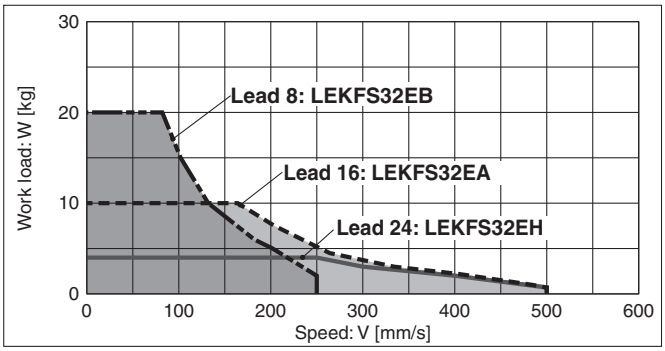

LEKFS40/Ball Screw Drive

Horizontal

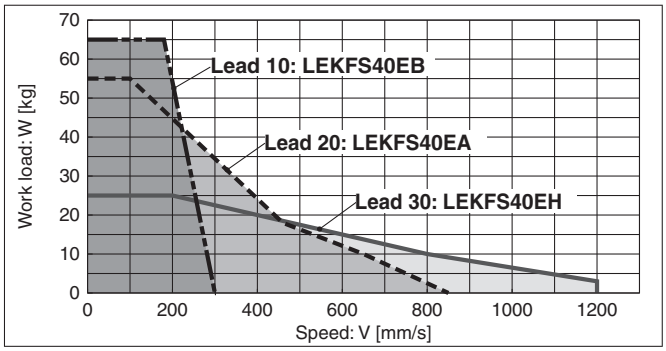

Vertical

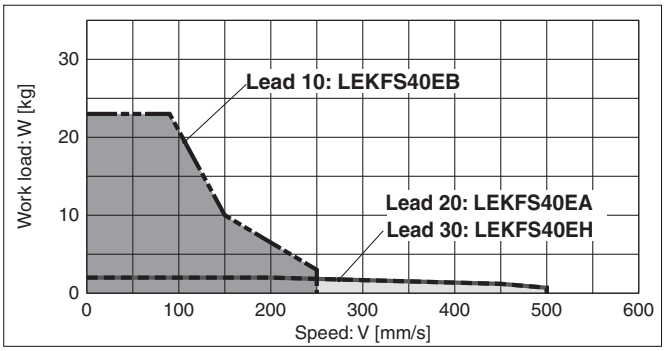

Speed–Work Load Graph (Guide)
For Battery-less Absolute (Step Motor 24 VDC), Motor Parallel Type

∗ The following graphs show the values when the moving force is 100 %.

LEKFS25(L/R)/Ball Screw Drive

Horizontal

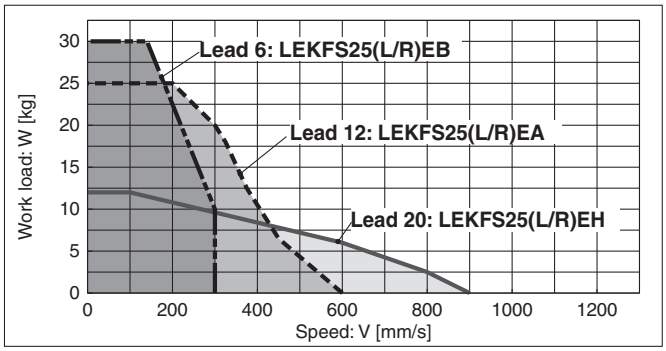

Vertical

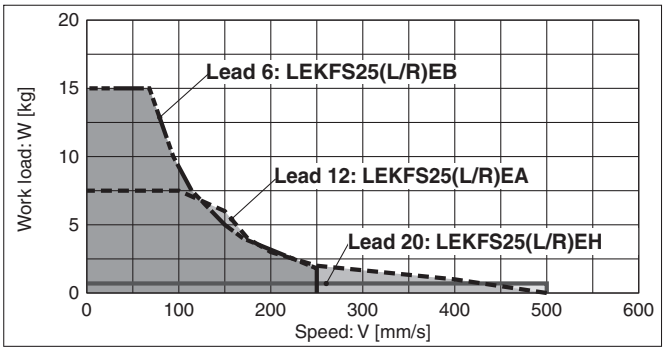

LEKFS32(L/R)/Ball Screw Drive

Horizontal

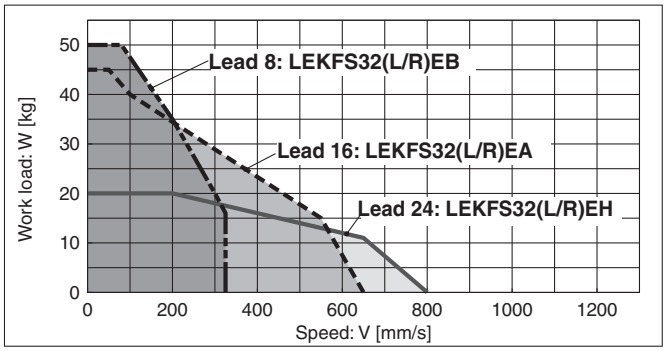

Vertical

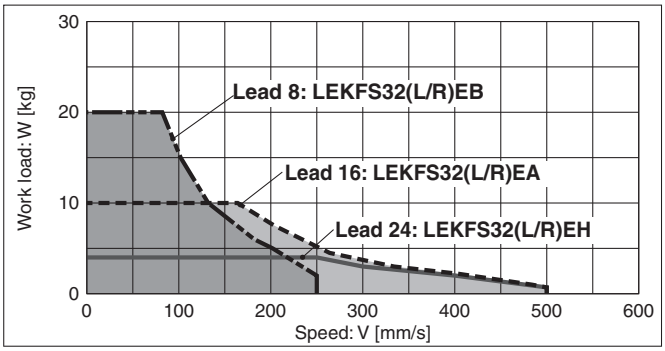

LEKFS40(L/R)/Ball Screw Drive

Horizontal

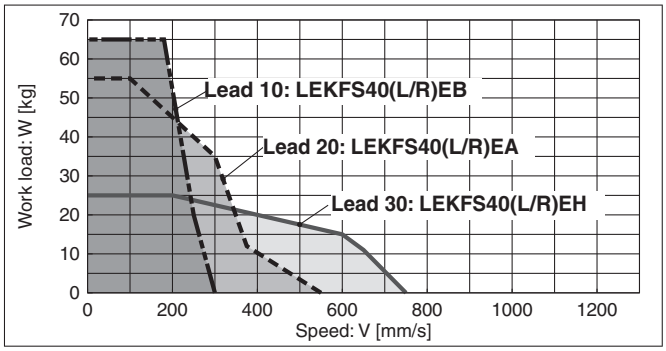

Vertical

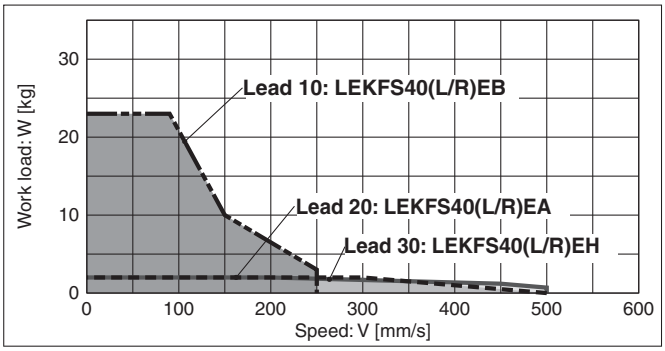

Static Allowable Moment∗1

Model	LEKFS25	LEKFS32	LEKFS40
Pitching [N·m]	61	141	264
Yawing [N·m]	70	141	264
Rolling [N·m]	115	290	473

∗1 The static allowable moment is the amount of static moment which can be applied to the actuator when it is stopped.
If the product is exposed to impact or repeated load, be sure to take adequate safety measures when using the product.

Dynamic Allowable Moment

∗ These graphs show the amount of allowable overhang (guide unit) when the centre of gravity of the workpiece overhangs in one direction. When selecting the overhang, refer to the "Calculation of Guide Load Factor" or the Electric Actuator Model Selection Software for confirmation: https://www.smc.eu

Acceleration/Deceleration ——— 1000 mm/s² – – – 3000 mm/s²

Orientation	Load overhanging direction **m** : Work load [kg] **Me**: Allowable moment [N·m] **L** : Overhang to the work load centre of gravity [mm]		Model		
			LEKFS25	**LEKFS32**	**LEKFS40**
Horizontal/Bottom	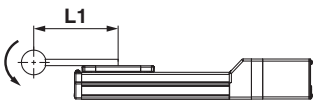	**X**	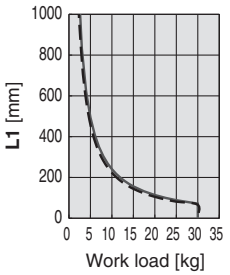	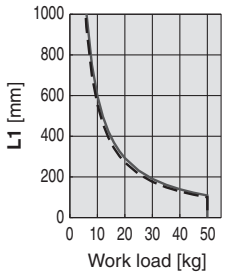	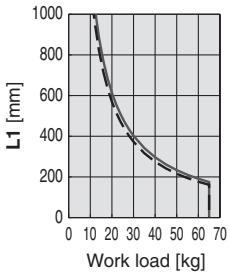
	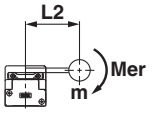	**Y**	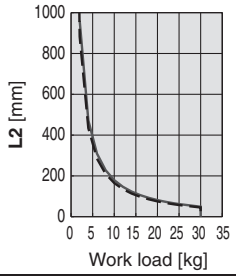	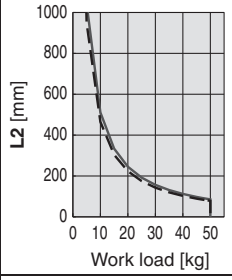	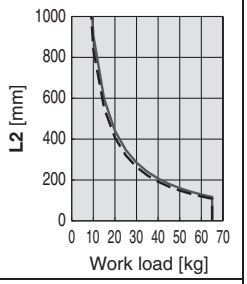
	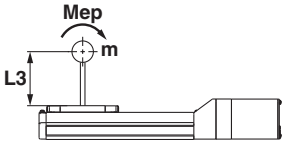	**Z**	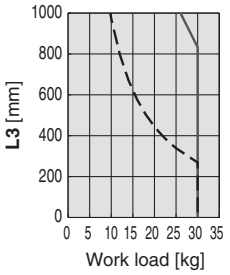	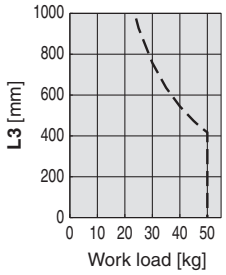	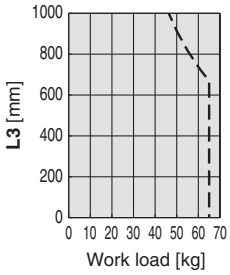
Wall	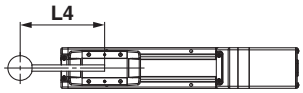	**X**	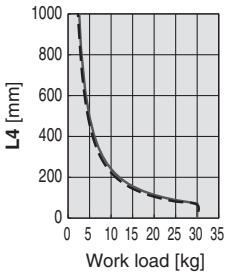	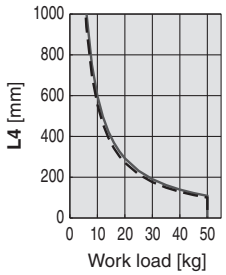	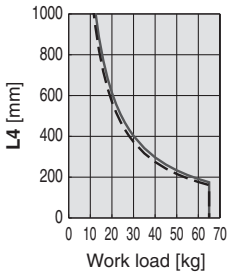
	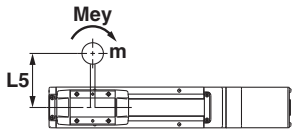	**Y**	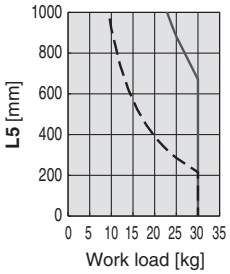	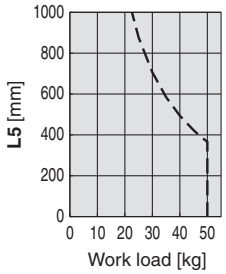	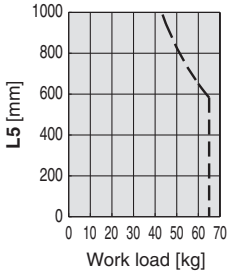
	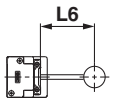	**Z**	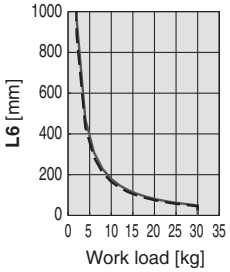	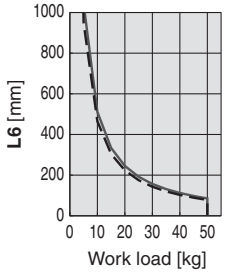	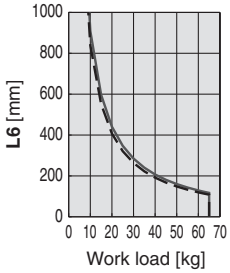

Dynamic Allowable Moment

∗ These graphs show the amount of allowable overhang (guide unit) when the centre of gravity of the workpiece overhangs in one direction. When selecting the overhang, refer to the "Calculation of Guide Load Factor" or the Electric Actuator Model Selection Software for confirmation: https://www.smc.eu

Acceleration/Deceleration ——— 1000 mm/s² — — — 3000 mm/s²

Orientation	Load overhanging direction **m** : Work load [kg] **Me**: Allowable moment [N·m] **L** : Overhang to the work load centre of gravity [mm]		Model		
			LEKFS25	**LEKFS32**	**LEKFS40**
Vertical	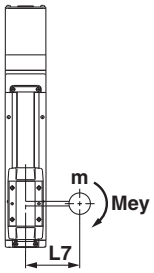	**Y**	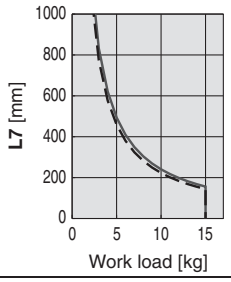	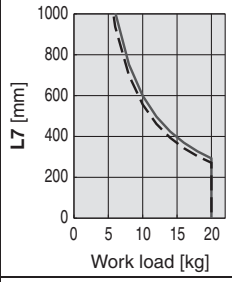	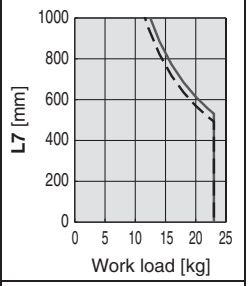
	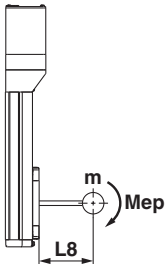	**Z**	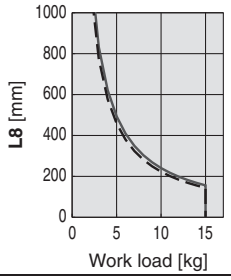	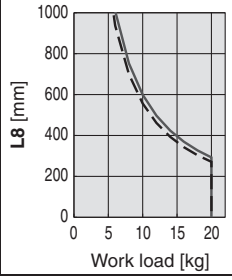	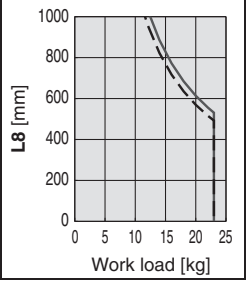

Calculation of Guide Load Factor

1. Decide operating conditions.
   Model: LEKFS
   Size: 25/32/40
   Mounting orientation: Horizontal/Bottom/Wall/Vertical
   Acceleration [mm/s²]: **a**
   Work load [kg]: **m**
   Work load centre position [mm]: **Xc/Yc/Zc**
2. Select the target graph while referencing the model, size, and mounting orientation.
3. Based on the acceleration and work load, find the overhang [mm]: **Lx/Ly/Lz** from the graph.
4. Calculate the load factor for each direction.
   $\alpha x = Xc/Lx$, $\alpha y = Yc/Ly$, $\alpha z = Zc/Lz$
5. Confirm the total of αx, αy, and αz is 1 or less.
   $\alpha x + \alpha y + \alpha z \leq 1$
   When 1 is exceeded, please consider a reduction of acceleration and work load, or a change of the work load centre position and series.

Mounting orientation

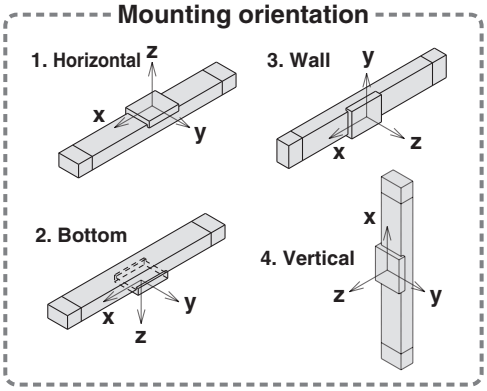

Example

1. Operating conditions
   Model: LEKFS40
   Size: 40
   Mounting orientation: Horizontal
   Acceleration [mm/s²]: 3000
   Work load [kg]: 20
   Work load centre position [mm]: **Xc = 0**, **Yc = 50**, **Zc = 200**
2. Select the graphs for horizontal of the LEKFS40 on page 7.
3. **Lx = 400 mm**, **Ly = 250 mm**, **Lz = 1500 mm**
4. The load factor for each direction can be found as follows.
   $\alpha x = 0/400 = 0$
   $\alpha y = 50/250 = 0.2$
   $\alpha z = 200/1500 = 0.13$
5. $\alpha x + \alpha y + \alpha z = 0.33 \leq 1$

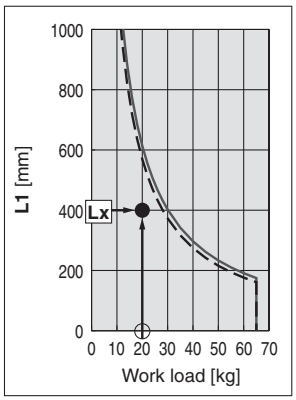

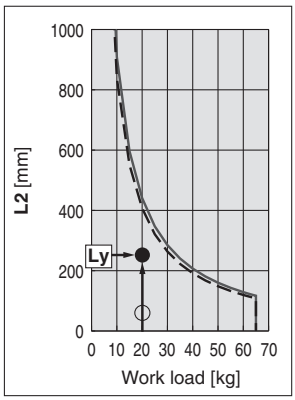

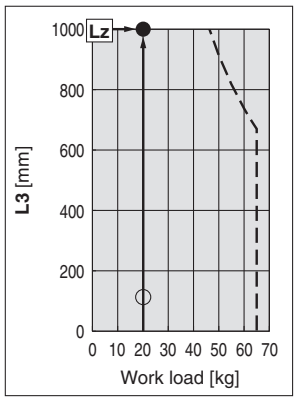

Table Accuracy (Reference Value)

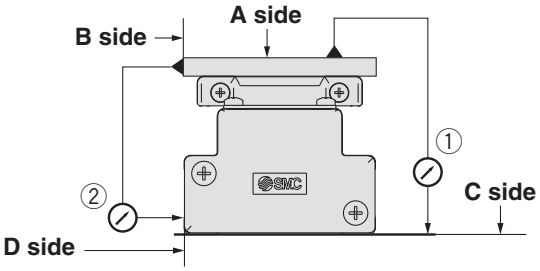

Model	Travelling parallelism [mm] (Every 300 mm)	
	① C side travelling parallelism to A side	② D side travelling parallelism to B side
LEKFS25	0.04	0.02
LEKFS32	0.04	0.02
LEKFS40	0.04	0.02

∗ Travelling parallelism does not include the mounting surface accuracy.

Table Displacement (Reference Value)

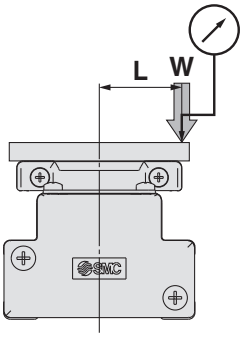

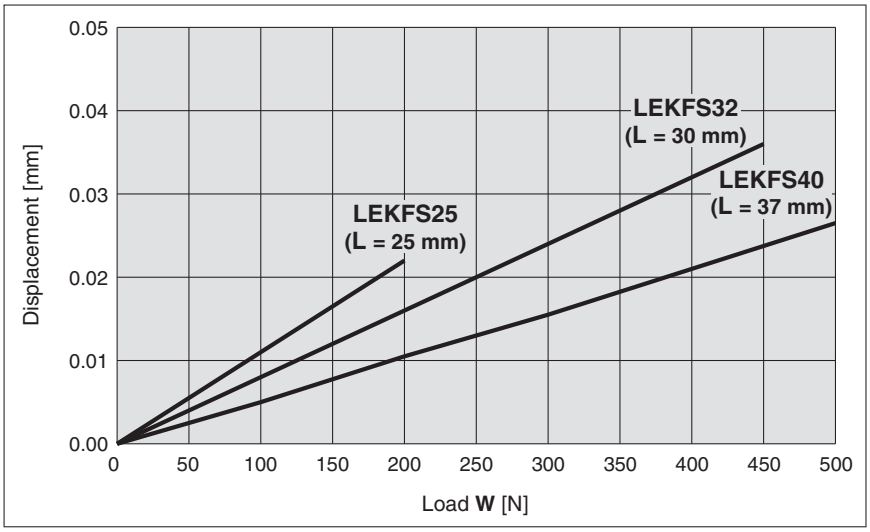

∗ This displacement is measured when a 15 mm aluminium plate is mounted and fixed on the table.

Battery-less Absolute Encoder: Electric Actuator High Rigidity and High Precision Slider Type

LEKFS Series LEKFS25, 32, 40

CE RoHS

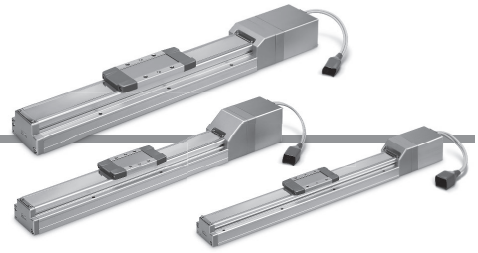

How to Order

LEKFS 32 ❑ E A – 300 ❑ – R1 CD17T

❶ ❷ ❸ ❹ ❺ ❻ ❼ ❽

❶ Size

25
32
40

❷ Motor mounting position

—	In-line
R	Right side parallel
L	Left side parallel

❸ Motor type

E	Battery-less absolute (Step motor 24 VDC)

❹ Lead [mm]

Symbol	LEKFS25	LEKFS32	LEKFS40
H	20	24	30
A	12	16	20
B	6	8	10

❺ Stroke*1

Size	Stroke					
	100	200	300	400	500	600
25	●	●	●	●	●	—
32	●	●	●	●	●	—
40	—	●	●	●	●	●

❻ Motor option

—	Without option
B	With lock

❼ Actuator cable type/length

Robotic cable [m]

—	None	R8	8*2
R1	1.5	RA	10*2
R3	3	RB	15*2
R5	5	RC	20*2

❽ Controller

—	Without controller
C□1□□	With controller

C D 1 7 T

Interface (Communication protocol/Input/Output)

E	EtherCAT®
9	EtherNet/IP™
P	PROFINET
D	DeviceNet™
L	IO-Link
M	CC-Link Ver. 1.10
5	Parallel input (NPN)
6	Parallel input (PNP)

For single axis

Mounting

7	Screw mounting
8*3	DIN rail

Communication plug connector, I/O cable*4

Symbol	Type	Applicable interface
—	Without accessory	—
S	Straight type communication plug connector	DeviceNet™ CC-Link Ver. 1.10
T	T-branch type communication plug connector	
1	I/O cable (1.5 m)	Parallel input (NPN) Parallel input (PNP)
3	I/O cable (3 m)	
5	I/O cable (5 m)	

*1 Please contact SMC for non-standard strokes as they are produced as special orders.
*2 Order auto switches separately. (For details, refer to the **Web Catalogue**.)
*3 The DIN rail is not included. It must be ordered separately.
*4 Select "—" for anything other than DeviceNet™, CC-Link, or parallel input.
Select "—," "S," or "T" for DeviceNet™ or CC-Link.
Select "—," "1," "3," or "5" for parallel input.

⚠Caution

[CE-compliant products]
EMC compliance was tested by combining the electric actuator LEKFS series and the controller JXC series.
The EMC depends on the configuration of the customer's control panel and the relationship with other electrical equipment and wiring. Therefore, compliance with the EMC directive cannot be certified for SMC components incorporated into the customer's equipment under actual operating conditions. As a result, it is necessary for the customer to verify compliance with the EMC directive for the machinery and equipment as a whole.

[UL-compliant products]
The JXC series controllers used in combination with electric actuators are UL certified.

[Precautions relating to differences in controller versions]
When the JXC series is to be used in combination with the battery-less absolute encoder, use a controller that is version V3.4 or S3.4 or higher.
For details, refer to the **Web Catalogue**.

The actuator and controller are sold as a package.

Confirm that the combination of the controller and actuator is correct.

<Check the following before use.>

*1 Check the actuator label for the model number.
This number should match that of the controller.

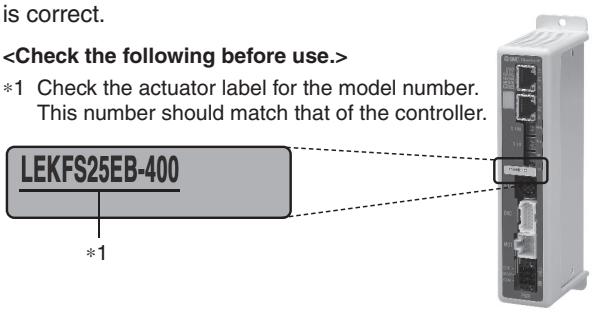

* Refer to the Operation Manual for using the products.
Please download it via our website: https://www.smc.eu

■Trademark

EtherNet/IP™ is a trademark of ODVA.
DeviceNet™ is a trademark of ODVA.
EtherCAT® is registered trademark and patented technology, licensed by Beckhoff Automation GmbH, Germany.

Type	EtherCAT® direct input type	EtherNet/IP™ direct input type	PROFINET direct input type	DeviceNet™ direct input type	IO-Link direct input type	CC-Link direct input type	Step data input type
							
Series	**JXCE1**	**JXC91**	**JXCP1**	**JXCD1**	**JXCL1**	**JXCM1**	**JXC51 JXC61**
Features	EtherCAT® direct input	EtherNet/IP™ direct input	PROFINET direct input	DeviceNet™ direct input	IO-Link direct input	CC-Link direct input	Parallel I/O
Compatible motor	Battery-less absolute (Step motor 24 VDC)						
Max. number of step data	64 points						
Power supply voltage	24 VDC						

Specifications

Battery-less Absolute (Step Motor 24 VDC)

Model					LEKFS25			LEKFS32			LEKFS40		
Actuator specifications	Stroke [mm]				100 to 500			100 to 500			200 to 600		
	Work load [kg]*1			Horizontal	12	25	30	20	45	50	25	55	65
				Vertical	0.5	7.5	15	4	10	20	2	2	23
	Speed*1 [mm/s]	In-line	Stroke range	Up to 500	20 to 1100	12 to 750	6 to 400	24 to 1200	16 to 800	8 to 400	30 to 1200	20 to 850	10 to 300
				501 to 600	—	—	—	—	—	—	30 to 1200	20 to 850	10 to 300
		Parallel	Stroke range	Up to 500	20 to 900	12 to 600	6 to 300	24 to 800	16 to 650	8 to 325	30 to 750	20 to 550	10 to 300
				501 to 600	—	—	—	—	—	—	30 to 750	20 to 550	10 to 300
	Max. acceleration/deceleration [mm/s^2]				3000								
	Positioning repeatability [mm]				±0.01 (Lead H: ±0.02)								
	Lost motion [mm]*2				0.05								
	Lead [mm]				20	12	6	24	16	8	30	20	10
	Impact/Vibration resistance [m/s^2]*3				50/20								
	Actuation type				Ball screw								
	Guide type				Linear guide								
	Operating temperature range [°C]				5 to 40								
	Operating humidity range [%RH]				90 or less (No condensation)								
Electric specifications	Motor size				□42			□56.4					
	Motor type				Battery-less absolute (Step motor 24 VDC)								
	Encoder				Battery-less absolute (4096 pulse/rotation)								
	Rated voltage [V]				24 VDC ±10 %								
	Power consumption [W]*4				38			50			100		
	Standby power consumption when operating [W]*5				16			44			43		
	Max. instantaneous power consumption [W]*6				57			123			141		
Lock unit specifications	Type*7				Non-magnetising lock								
	Holding force [N]				47	78	157	72	108	216	75	113	225
	Power consumption [W]*8				5			5			5		
	Rated voltage [V]				24 VDC ±10 %								

*1 Speed changes according to the work load. Check the "Speed–Work Load Graph (Guide)" on pages 5 and 6.
Furthermore, if the cable length exceeds 5 m, then it will decrease by up to 10 % for each 5 m.
*2 A reference value for correcting errors in reciprocal operation
*3 Impact resistance: No malfunction occurred when the actuator was tested with a drop tester in both an axial direction and a perpendicular direction to the lead screw. (The test was performed with the actuator in the initial state.)
Vibration resistance: No malfunction occurred in a test ranging between 45 to 2000 Hz. The test was performed in both an axial direction and a perpendicular direction to the lead screw. (The test was performed with the actuator in the initial state.)
*4 The power consumption (including the controller) is for when the actuator is operating.
*5 The standby power consumption when operating (including the controller) is for when the actuator is stopped in the set position during the operation.
*6 The max. instantaneous power consumption (including the controller) is for when the actuator is operating. This value can be used for the selection of the power supply.
*7 With lock only
*8 For an actuator with lock, add the power consumption for the lock.

Dimensions: In-line Motor

LEKFS25E

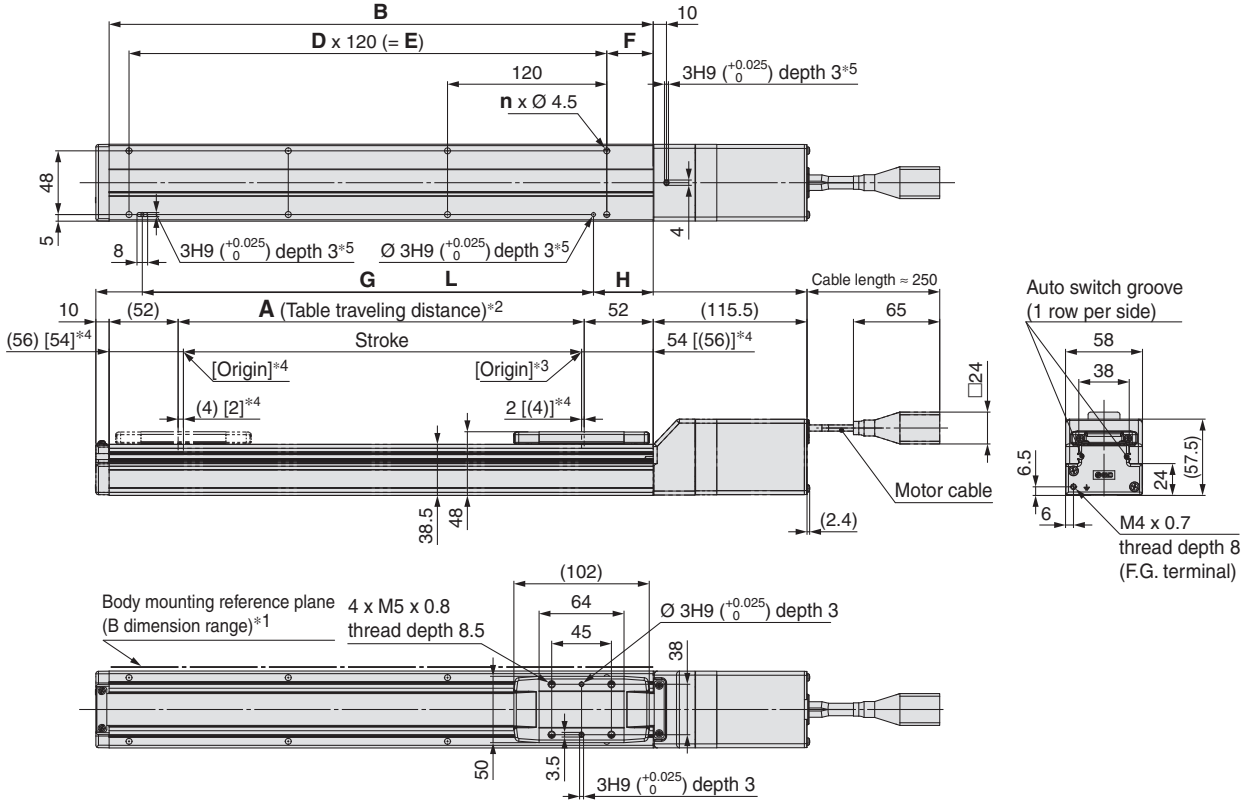

Motor option: With lock

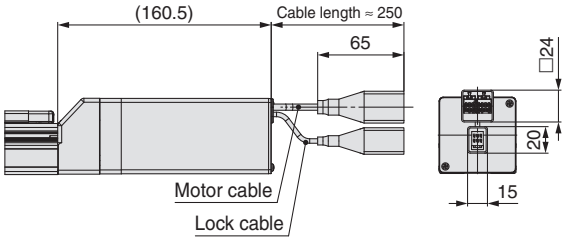

*1 When mounting the actuator using the body mounting reference plane, set the height of the opposite surface or pin to be 3 mm or more. (Recommended height: 5 mm)
In addition, be aware that surfaces other than the body mounting reference plane (B dimension range) may slightly protrude from the body mounting reference plane. Be sure to provide a clearance of 1 mm or more to avoid interference with workpieces, facilities, etc.
*2 This is the distance within which the table can move when it returns to origin. Make sure workpieces mounted on the table do not interfere with other workpieces or the facilities around the table.
*3 Position after returning to origin
*4 [ ] for when the direction of return to origin has changed
*5 When using the positioning pin holes on the bottom, use either the one on the body side or the one on the housing side.

Dimensions [mm]

Model	L		A	B	n	D	E	F	G	H
	Without lock	With lock								
LEKFS25E□-100□	335.5	380.5	106	210	4	—	—	35	100	45
LEKFS25E□-200□	435.5	480.5	206	310	6	2	240		220	
LEKFS25E□-300□	535.5	580.5	306	410	8	3	360		340	
LEKFS25E□-400□	635.5	680.5	406	510	8	3	360		340	
LEKFS25E□-500□	735.5	780.5	506	610	10	4	480		460	

Dimensions: In-line Motor

LEKFS32E

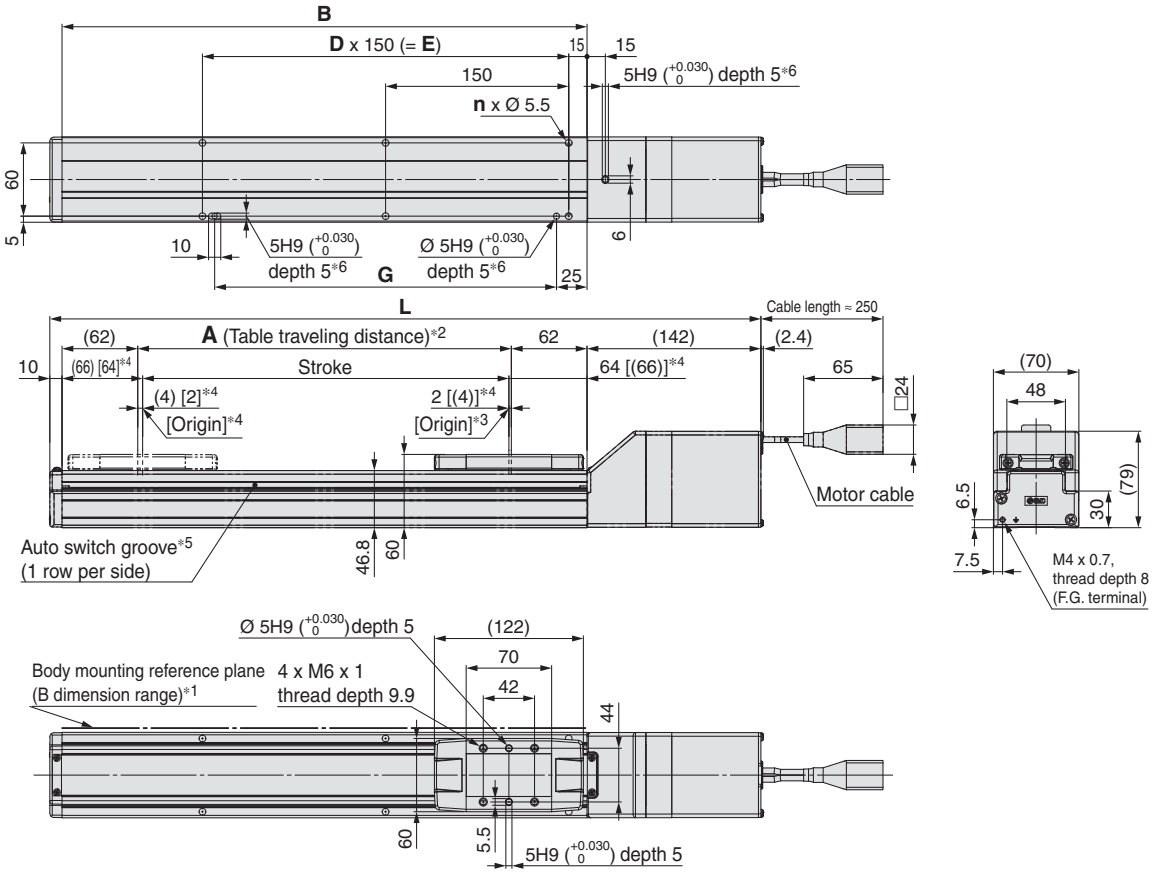

Motor option: With lock

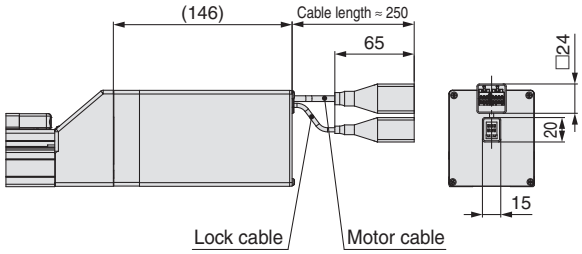

*1 When mounting the actuator using the body mounting reference plane, set the height of the opposite surface or pin to be 3 mm or more. (Recommended height: 5 mm)
In addition, be aware that surfaces other than the body mounting reference plane (B dimension range) may slightly protrude from the body mounting reference plane. Be sure to provide a clearance of 1 mm or more to avoid interference with workpieces, facilities, etc.
*2 This is the distance within which the table can move when it returns to origin. Make sure workpieces mounted on the table do not interfere with other workpieces or the facilities around the table.
*3 Position after returning to origin
*4 [ ] for when the direction of return to origin has changed
*5 A switch spacer (BMY3-016) is required to secure auto switches. Please order it separately.
*6 When using the positioning pin holes on the bottom, use either the one on the body side or the one on the housing side.

Dimensions

[mm]

Model	L		A	B	n	D	E	G
	Without lock	With lock						
LEKFS32E□-100□	382	434	106	230	4	—	—	130
LEKFS32E□-200□	482	534	206	330	6	2	300	280
LEKFS32E□-300□	582	634	306	430	6	2	300	280
LEKFS32E□-400□	682	734	406	530	8	3	450	430
LEKFS32E□-500□	782	834	506	630	10	4	600	580

Dimensions: In-line Motor

LEKFS40E

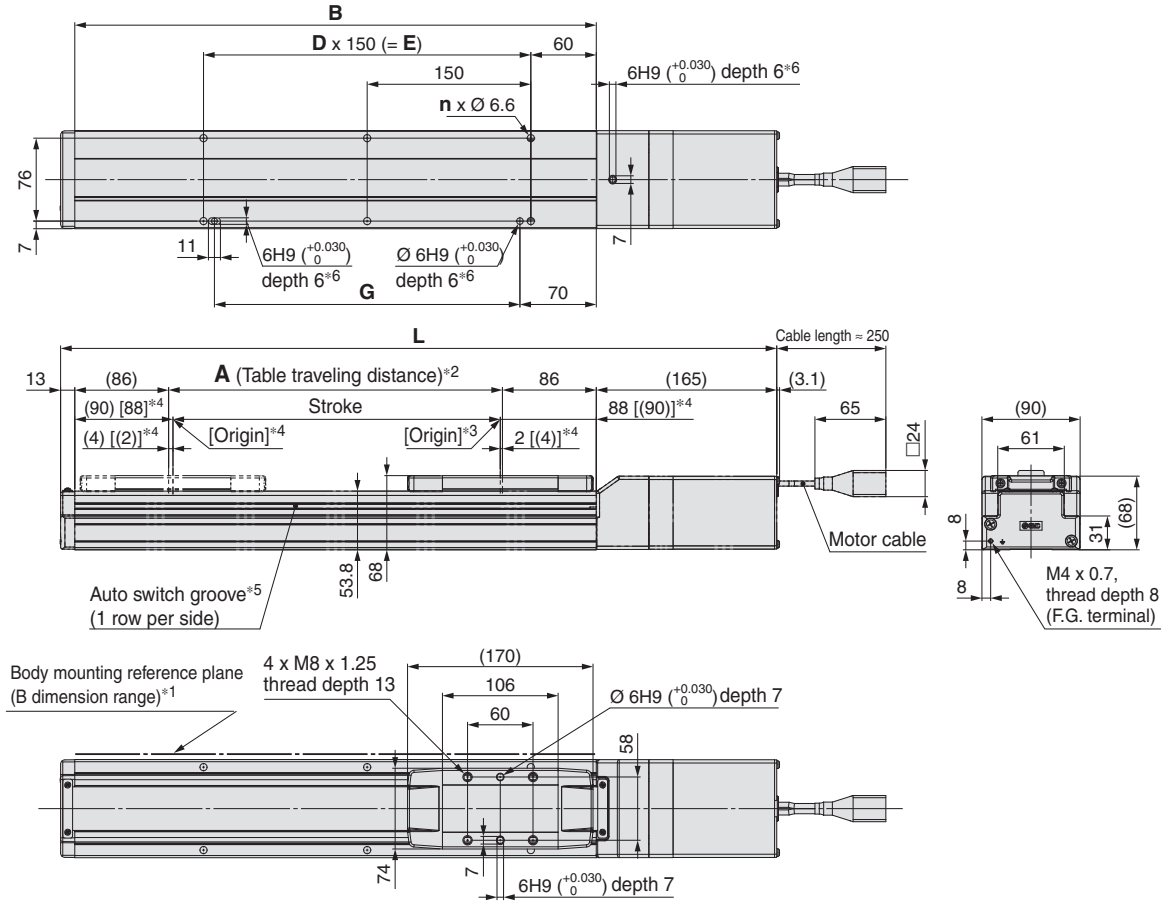

Motor option: With lock

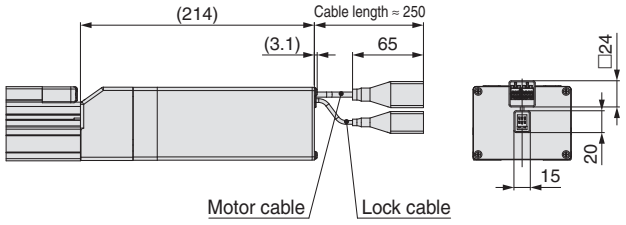

*1 When mounting the actuator using the body mounting reference plane, set the height of the opposite surface or pin to be 3 mm or more. (Recommended height: 5 mm)
In addition, be aware that surfaces other than the body mounting reference plane (B dimension range) may slightly protrude from the body mounting reference plane. Be sure to provide a clearance of 1 mm or more to avoid interference with workpieces, facilities, etc.
*2 This is the distance within which the table can move when it returns to origin. Make sure workpieces mounted on the table do not interfere with other workpieces or the facilities around the table.
*3 Position after returning to origin
*4 [ ] for when the direction of return to origin has changed
*5 A switch spacer (BMY3-016) is required to secure auto switches. Please order it separately.
*6 When using the positioning pin holes on the bottom, use either the one on the body side or the one on the housing side.

Dimensions [mm]

Model	L		A	B	n	D	E	G
	Without lock	With lock						
LEKFS40E□-200□	556	605	206	378	6	2	300	280
LEKFS40E□-300□	656	705	306	478	6	2	300	280
LEKFS40E□-400□	756	805	406	578	8	3	450	430
LEKFS40E□-500□	856	905	506	678	10	4	600	580
LEKFS40E□-600□	956	1005	606	778	10	4	600	580

Dimensions: Motor Parallel

LEKFS25R

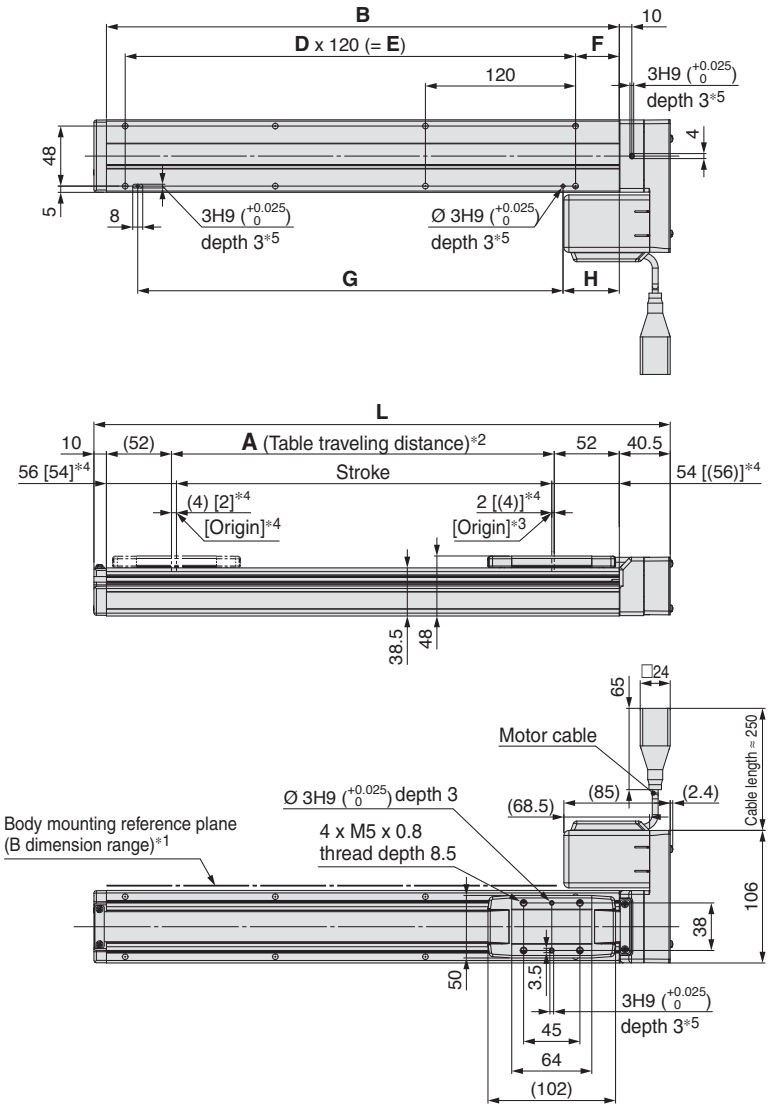

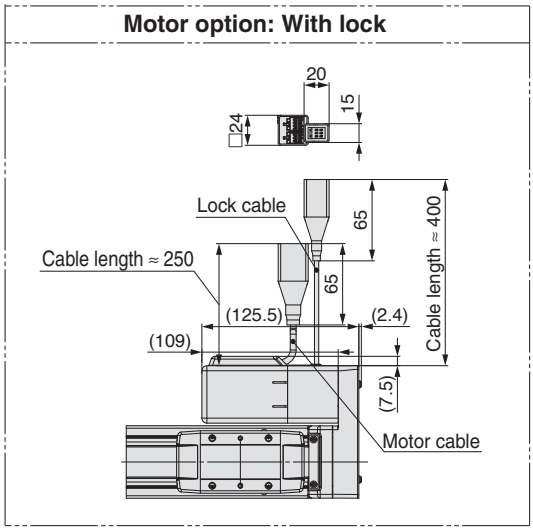

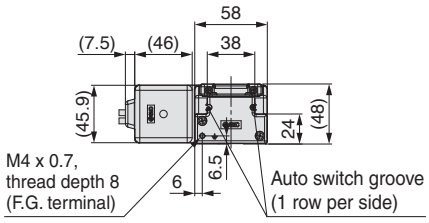

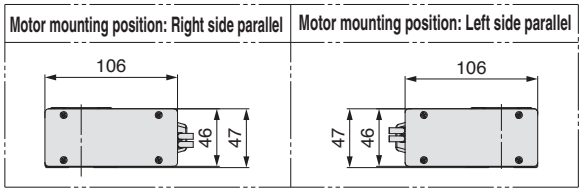

*1 When mounting the actuator using the body mounting reference plane, set the height of the opposite surface or pin to be 3 mm or more. (Recommended height: 5 mm) In addition, be aware that surfaces other than the body mounting reference plane (B dimension range) may slightly protrude from the body mounting reference plane. Be sure to provide a clearance of 1 mm or more to avoid interference with workpieces, facilities, etc.
*2 This is the distance within which the table can move when it returns to origin. Make sure workpieces mounted on the table do not interfere with other workpieces or the facilities around the table.
*3 Position after returning to origin
*4 [ ] for when the direction of return to origin has changed
*5 When using the positioning pin holes on the bottom, use either the one on the body side or the one on the housing side.
* This illustration shows the motor mounting position for the right side parallel type.

Dimensions

[mm]

Model	L	A	B	n	D	E	F	G	H
LEKFS25□□-100□	260.5	106	210	4	—	—	35	100	45
LEKFS25□□-200□	360.5	206	310	6	2	240		220	
LEKFS25□□-300□	460.5	306	410	8	3	360		340	
LEKFS25□□-400□	560.5	406	510	8	3	360		340	
LEKFS25□□-500□	660.5	506	610	10	4	480		460	

Dimensions: Motor Parallel

LEKFS32R

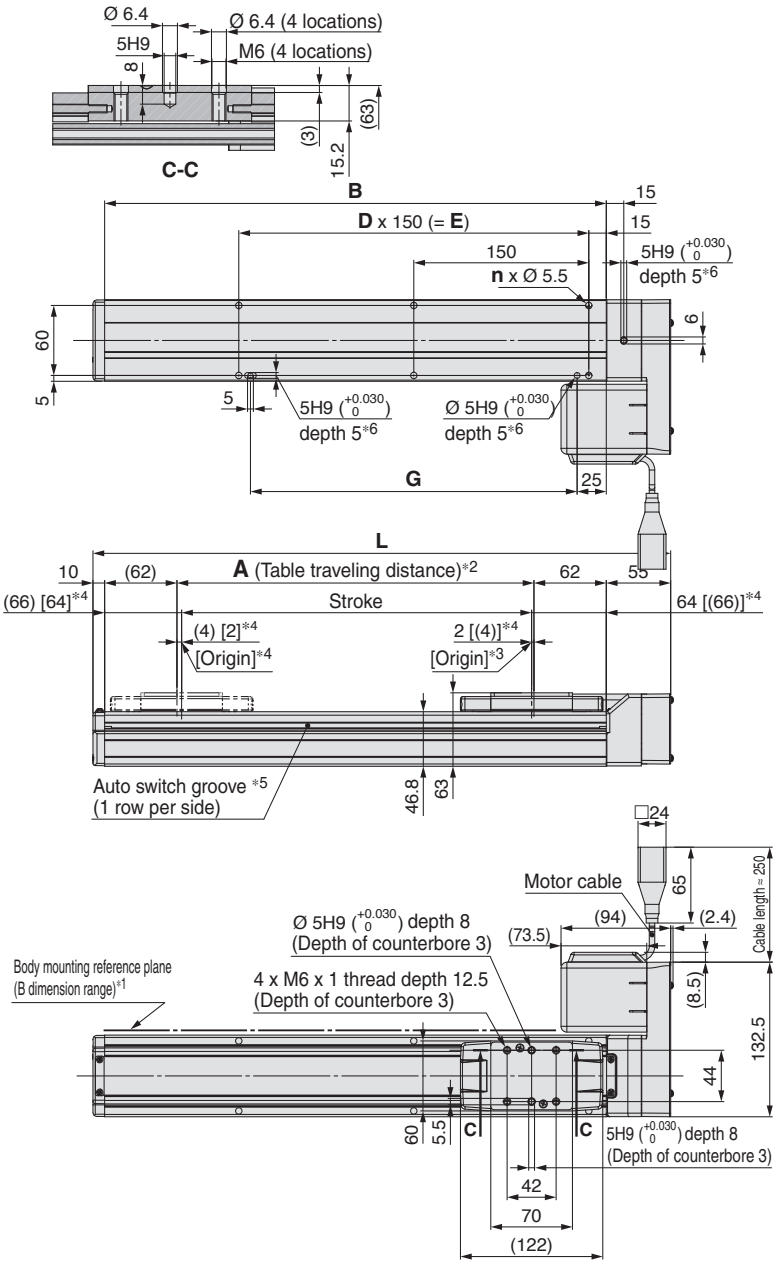

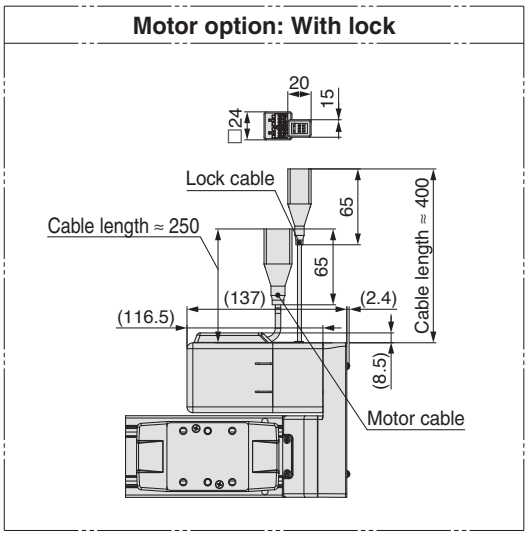

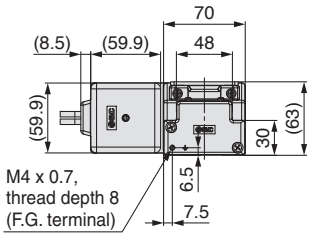

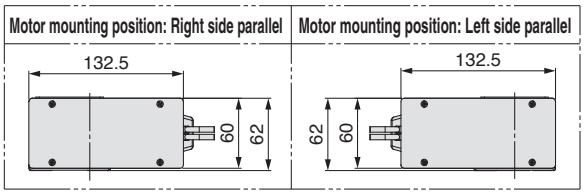

*1 When mounting the actuator using the body mounting reference plane, set the height of the opposite surface or pin to be 3 mm or more. (Recommended height: 5 mm) In addition, be aware that surfaces other than the body mounting reference plane (B dimension range) may slightly protrude from the body mounting reference plane. Be sure to provide a clearance of 1 mm or more to avoid interference with workpieces, facilities, etc.
*2 This is the distance within which the table can move when it returns to origin. Make sure workpieces mounted on the table do not interfere with other workpieces or the facilities around the table.
*3 Position after returning to origin
*4 [ ] for when the direction of return to origin has changed
*5 A switch spacer (BMY3-016) is required to secure auto switches. Please order it separately.
*6 When using the positioning pin holes on the bottom, use either the one on the body side or the one on the housing side.
* This illustration shows the motor mounting position for the right side parallel type.

Dimensions

[mm]

Model	L	A	B	n	D	E	G
LEKFS32□□-100□	295	106	230	4	—	—	130
LEKFS32□□-200□	395	206	330	6	2	300	280
LEKFS32□□-300□	495	306	430	6	2	300	280
LEKFS32□□-400□	595	406	530	8	3	450	430
LEKFS32□□-500□	695	506	630	10	4	600	580

Dimensions: Motor Parallel

LEKFS40R

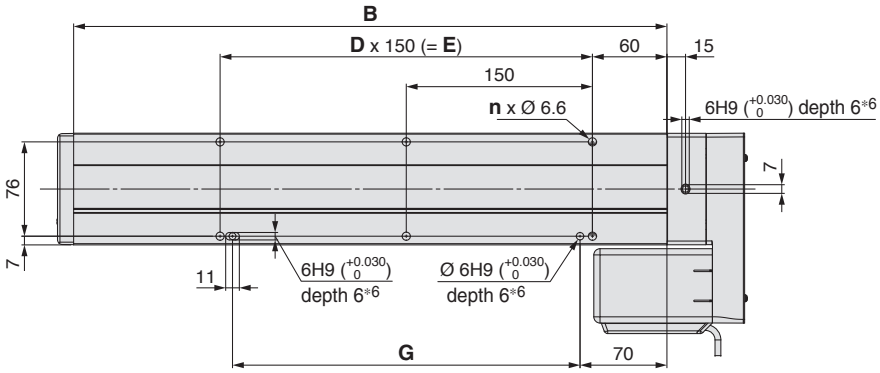

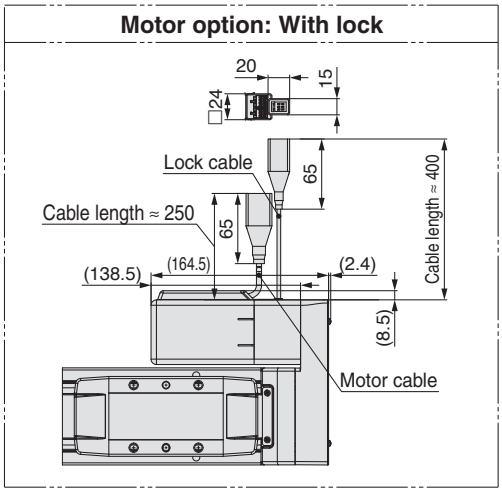

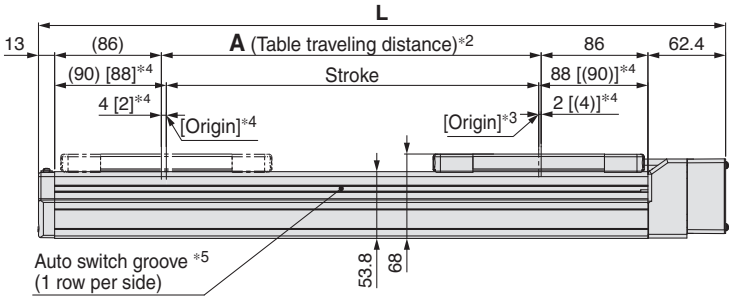

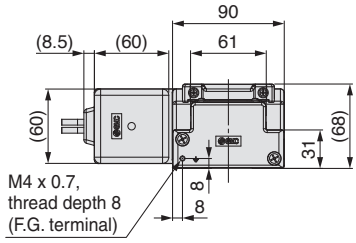

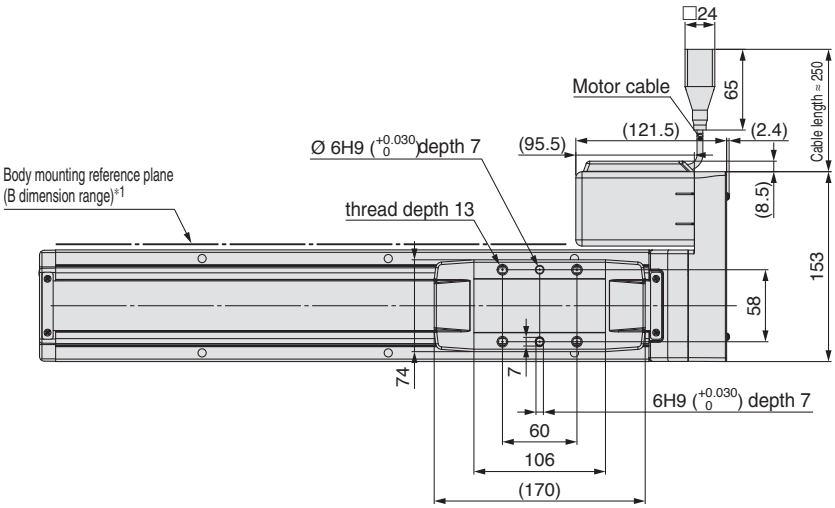

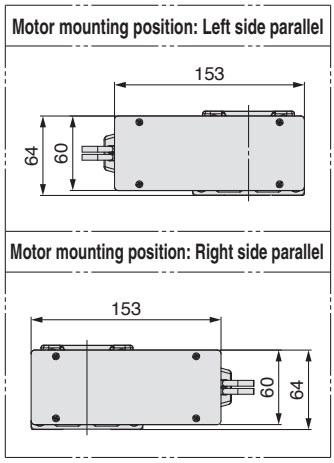

*1 When mounting the actuator using the body mounting reference plane, set the height of the opposite surface or pin to be 3 mm or more. (Recommended height: 5 mm) In addition, be aware that surfaces other than the body mounting reference plane (B dimension range) may slightly protrude from the body mounting reference plane. Be sure to provide a clearance of 1 mm or more to avoid interference with workpieces, facilities, etc.
*2 This is the distance within which the table can move when it returns to origin. Make sure workpieces mounted on the table do not interfere with other workpieces or the facilities around the table.
*3 Position after returning to origin
*4 [ ] for when the direction of return to origin has changed
*5 A switch spacer (BMY3-016) is required to secure auto switches. Please order it separately.
*6 When using the positioning pin holes on the bottom, use either the one on the body side or the one on the housing side.
* This illustration shows the motor mounting position for the right side parallel type.

Dimensions

[mm]

Model	L	A	B	n	D	E	G
LEKFS40□□-200□	453.4	206	378	6	2	300	280
LEKFS40□□-300□	553.4	306	478	6	2	300	280
LEKFS40□□-400□	653.4	406	578	8	3	450	430
LEKFS40□□-500□	753.4	506	678	10	4	600	580
LEKFS40□□-600□	853.4	606	778	10	4	600	580

⚠ Safety Instructions

These safety instructions are intended to prevent hazardous situations and/or equipment damage. These instructions indicate the level of potential hazard with the labels of **"Caution," "Warning"** or **"Danger."** They are all important notes for safety and must be followed in addition to International Standards (ISO/IEC) [1], and other safety regulations.

⚠ **Caution:**	**Caution** indicates a hazard with a low level of risk which, if not avoided, could result in minor or moderate injury.
⚠ **Warning:**	**Warning** indicates a hazard with a medium level of risk which, if not avoided, could result in death or serious injury.
⚠ **Danger:**	**Danger** indicates a hazard with a high level of risk which, if not avoided, will result in death or serious injury.

1) ISO 4414: Pneumatic fluid power – General rules relating to systems.
ISO 4413: Hydraulic fluid power – General rules relating to systems.
IEC 60204-1: Safety of machinery – Electrical equipment of machines. (Part 1: General requirements)
ISO 10218-1: Manipulating industrial robots - Safety.
etc.

⚠ Warning

1. The compatibility of the product is the responsibility of the person who designs the equipment or decides its specifications.
Since the product specified here is used under various operating conditions, its compatibility with specific equipment must be decided by the person who designs the equipment or decides its specifications based on necessary analysis and test results. The expected performance and safety assurance of the equipment will be the responsibility of the person who has determined its compatibility with the product. This person should also continuously review all specifications of the product referring to its latest catalogue information, with a view to giving due consideration to any possibility of equipment failure when configuring the equipment.

2. Only personnel with appropriate training should operate machinery and equipment.
The product specified here may become unsafe if handled incorrectly. The assembly, operation and maintenance of machines or equipment including our products must be performed by an operator who is appropriately trained and experienced.

3. Do not service or attempt to remove product and machinery/equipment until safety is confirmed.
1. The inspection and maintenance of machinery/equipment should only be performed after measures to prevent falling or runaway of the driven objects have been confirmed.
2. When the product is to be removed, confirm that the safety measures as mentioned above are implemented and the power from any appropriate source is cut, and read and understand the specific product precautions of all relevant products carefully.
3. Before machinery/equipment is restarted, take measures to prevent unexpected operation and malfunction.

4. Contact SMC beforehand and take special consideration of safety measures if the product is to be used in any of the following conditions.
1. Conditions and environments outside of the given specifications, or use outdoors or in a place exposed to direct sunlight.
2. Installation on equipment in conjunction with atomic energy, railways, air navigation, space, shipping, vehicles, military, medical treatment, combustion and recreation, or equipment in contact with food and beverages, emergency stop circuits, clutch and brake circuits in press applications, safety equipment or other applications unsuitable for the standard specifications described in the product catalogue.
3. An application which could have negative effects on people, property, or animals requiring special safety analysis.
4. Use in an interlock circuit, which requires the provision of double interlock for possible failure by using a mechanical protective function, and periodical checks to confirm proper operation.

⚠ Caution

1. The product is provided for use in manufacturing industries.
The product herein described is basically provided for peaceful use in manufacturing industries.
If considering using the product in other industries, consult SMC beforehand and exchange specifications or a contract if necessary.
If anything is unclear, contact your nearest sales branch.

Limited warranty and Disclaimer/Compliance Requirements

The product used is subject to the following "Limited warranty and Disclaimer" and "Compliance Requirements".Read and accept them before using the product.

Limited warranty and Disclaimer

1. The warranty period of the product is 1 year in service or 1.5 years after the product is delivered, whichever is first. [2] Also, the product may have specified durability, running distance or replacement parts. Please consult your nearest sales branch.
2. For any failure or damage reported within the warranty period which is clearly our responsibility, a replacement product or necessary parts will be provided. This limited warranty applies only to our product independently, and not to any other damage incurred due to the failure of the product.
3. Prior to using SMC products, please read and understand the warranty terms and disclaimers noted in the specified catalogue for the particular products.

2) Vacuum pads are excluded from this 1 year warranty.
A vacuum pad is a consumable part, so it is warranted for a year after it is delivered. Also, even within the warranty period, the wear of a product due to the use of the vacuum pad or failure due to the deterioration of rubber material are not covered by the limited warranty.

Compliance Requirements

1. The use of SMC products with production equipment for the manufacture of weapons of mass destruction (WMD) or any other weapon is strictly prohibited.
2. The exports of SMC products or technology from one country to another are governed by the relevant security laws and regulations of the countries involved in the transaction. Prior to the shipment of a SMC product to another country, assure that all local rules governing that export are known and followed.

⚠ Caution

SMC products are not intended for use as instruments for legal metrology.
Measurement instruments that SMC manufactures or sells have not been qualified by type approval tests relevant to the metrology (measurement) laws of each country.
Therefore, SMC products cannot be used for business or certification ordained by the metrology (measurement) laws of each country.

Electric Actuator
High Rigidity and High Precision Slider Type

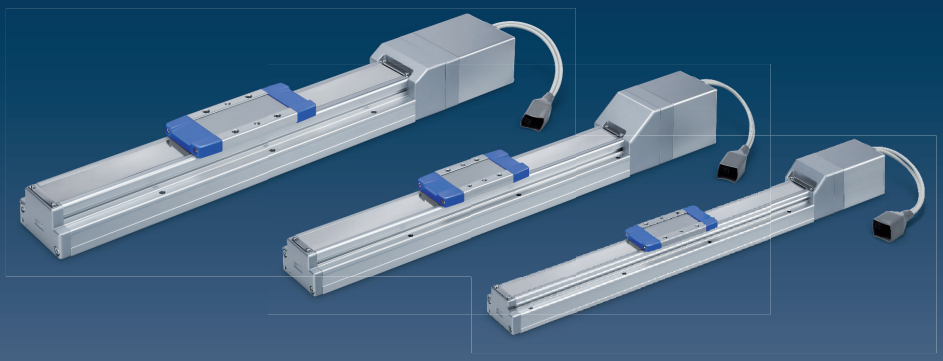

SMC Corporation

SMC CORPORATION
Akihabara UDX 15F, 4-14-1, Sotokanda, Chiyoda-ku, Tokyo 101-0021, JAPAN
Phone: 03-5207-8249 FAX: 03-5298-5362

European Marketing Centre (EMC)
Zuazobidea 14, 01015 Vitoria
Tel: +34 945-184 100 Fax: +34 945-184 124
URL http://www.smc.eu

1st printing ZV printing ZV 00 Printed in Spain