Thermo-dryer

With air temperature adjustment function

New

CE RoHS

Stable supply of temperature and pressure controlled dry clean air!

Possible to supply compressed air with the same conditions and quality regardless of the season.

Air flow capacity (ℓ/min[ANR])

IDH□4 : 100 to 500
IDH□6 : 200 to 800

Application example

Supplying compressed air with constant conditions to air bearings mounted on the tool.

All-in-One

Temperature control (Heater)

Outlet air temperature adjustment range:
15 to 30°C (possible to extend depending on the conditions)

Outlet air temperature stability:
±0.1°C *1

Pressure regulation (Regulator)

Outlet air set pressure range:
0.15 to 0.85 MPa

Dehumidification (Dryer)

Outlet air pressure dew point:
10°C

Cleaning (Filter)

Built-in filter specifications *2

Nominal filtration rating:
0.01 μm

Outlet oil mist concentration:
MAX. **0.01 mg/m³ [ANR]**
(≈0.008 ppm)

Outlet cleanliness:
Particles of 0.3 μm or more:
3.5 particles/ℓ [ANR] or less

*1 Performance when the operation of each part is stable without fluctuations in operating conditions and power supply.
*2 Performance of the built-in filter, which depends on the inlet air conditions.

Power supply available all over the world Single-phase 100 VAC, 200 VAC, 230 VAC (50/60 Hz)

Model	Air flow capacity (ℓ/min [ANR])	Outlet air temperature adjustment range (°C)	Outlet air set pressure range (MPa)	Outlet air temperature stability (°C)	Filter nominal filtration rating	Temperature control method	Port size
IDH□4	100 to 500	15 to 30	0.15 to 0.85	±0.1	0.01 μm (99.9% filtration efficiency)	Heater operation PID control	Rc3/8
IDH□6	200 to 800						Rc1/2

Series IDH□

SMC

CAT. EUS30-14A-UK

Thermo-dryer

Compact, Space saving

*For IDH□4
Dimensions in brackets indicate for IDH□6. Unit: mm

Installation close to a wall is possible.

Installation close to a wall is possible with the ventilation holes on the front and top sides.

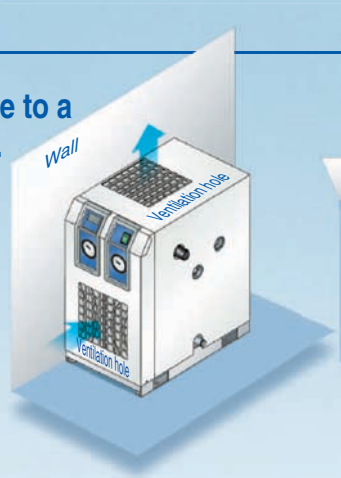

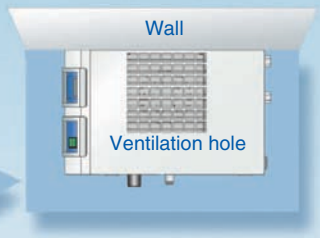

Convenient Functions

Power failure auto-restart function

Even if operation is stopped by unexpected power failure, once the power supply is recovered, the operation will start automatically.

*If an instantaneous power failure occurs, the operation may restart after a few minutes.

Control temperature failure alarm

If the temperature exceeds the set temperature by an arbitrary amount, an error signal will be generated.

*At shipment, if the control temperature exceeds or goes under the set temperature by ±5°C, an error signal will be generated.

Auto-tuning (A·T) function

The control set values (PID) are automatically set.

Key-lock function

The set value is protected so it will not be changed even if keys are touched by mistake or setting is changed.

Large digital display

Display	Function
1 PV	Displays the outlet air temperature.
2 SV	Displays the outlet air temperature set value. (Default: 25°C)
3 C1	Lights up or flashes when the temperature adjustment heater is operating.
4 AL1	Flashes when a control temperature error is generated.
5 SEL	This key is used to change and fix the set value.
6 ^	Increases the set temperature and set values.
7 ˅	Decreases the set temperature and set values.

Regulator handle

Built-in filter

The discharge of drainage and element replacement timing can be checked visually.

Filter② (AME)

Super Mist Separator
- Nominal filtration rating: 0.01 μm (99.9% filtration efficiency)
- Outlet oil mist concentration: MAX. 0.01 mg/m³ [ANR] (≈0.008 ppm)
- Outlet oil mist concentration: Particles of 0.3 μm or more: 3.5 particles/ℓ [ANR] or less

Pressure adjustment handle

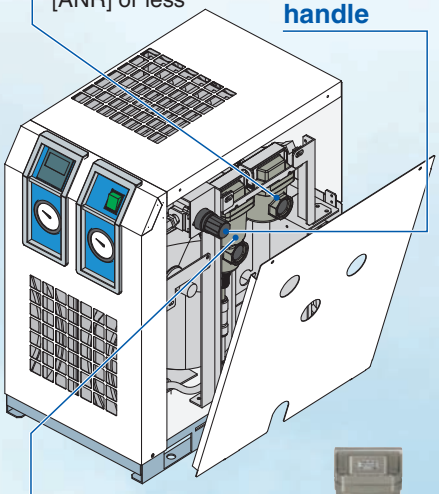

Filter① (AMH)

Micro Mist Separator with Pre-filter
- Nominal filtration rating: 0.01 μm (99.9% filtration efficiency)
- Outlet oil mist concentration: MAX. 0.1 mg/m³ [ANR] (≈0.08 ppm)

Drain outlet

Dustproof filter standard equipment

Built-in earth leakage breaker

Remote operation, stop, error signal output functions are provided.

It is possible to achieve centralised control in a factory with remote operation, stop and error signal output functions.

- It is possible to operate and stop the dryer remotely. (Note that the dryer should be rested for at least 3 minutes after it is stopped, and should be operated for at least 10 minutes continuously.)
- It is possible to receive operation and error signals.

It is possible to synchronise the operation of the dryer with the external air compressor operation to prevent people from forgetting to turn it off and contribute to energy saving.

Remote operation application examples

Operating together with compressor

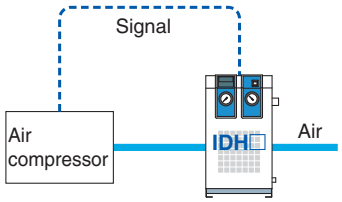

Centralised control

Several units can be controlled together with PLC.

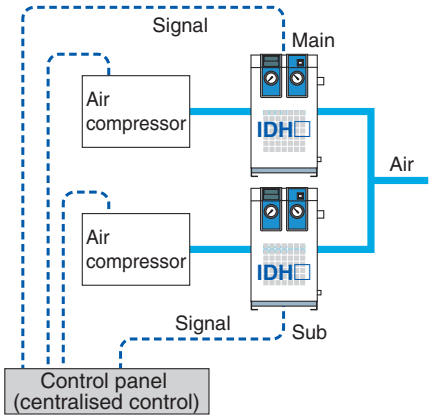

Switching operation of the dryer

If the main dryer is stopped during 24-hour operation by an emergency stop signal, the error signal is detected and sub dryer is operated.

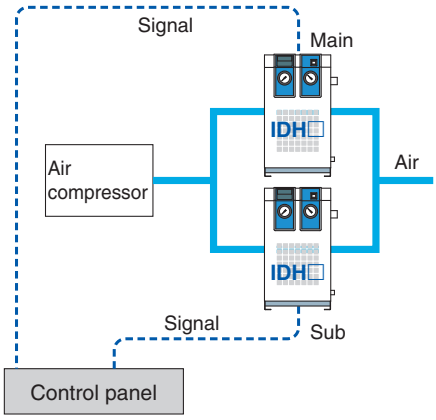

Application Examples

Measuring machine

- Cooling of air bearing
- Assisting lifting of table
- Cooling of linear scale

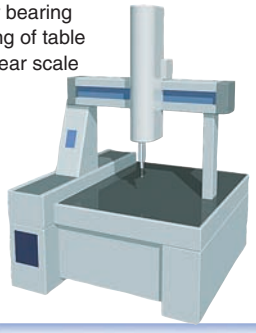

Cooling of die

- Cooling of laser irradiation part

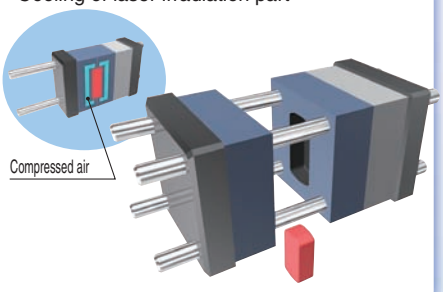

Semiconductor-related manufacturing equipment

- Supplying air to air bearing
- Temperature control of glass substrate

Machine tool

- Supplying air to air bearing

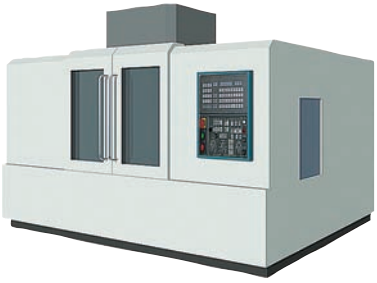

Powder coating

- Temperature control of paint

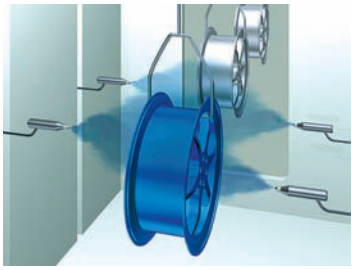

Food machinery

- Eliminating humidity/ cooling of hopper
- Temperature control in rice/wheat chamber

Other Applications

Laser beam machine
- Cooling of laser irradiation part

UV curing device (printing, painting, bonding and sealing)
- Cooling of UV lamp

X-ray (digital) apparatus
- Temperature control of X-ray tube and X-ray light receiving section

Electronic microscope
- Temperature control of electron beam irradiation part

Laser marker
- Cooling of laser irradiation part

Ultrasonic wave inspection apparatus
- Temperature control of ultra sonic wave laser part

Linear motor
- Temperature control of moving coil

Packaging machine (sealing of film and paper package)
- Cooling of work pieces for bonding

Shrink fitting machine
- Cooling of workpiece

Leak test machine
- Precise temperature control of compressed air for leakage tests

*The effectiveness is not guaranteed in all applications. Please check whether the dryer can be used in the actual application.

Series IDH□
Model Selection

The settable range of the outlet air set temperature varies depending on the operating conditions. Be sure to select the model in accordance with the selection method below.

1 Selection by air flow

Selection Example ①

Condition		Data symbol
Inlet air temperature	20°C	Ⓐ
Ambient temperature	25°C	Ⓑ
Outlet air pressure dew point	3°C	Ⓒ
Inlet air pressure	1 MPa	Ⓓ
Outlet air set temperature	20°C	Ⓕ
Air flow	300 ℓ/min [ANR]	Ⓔ

IDH□4 or **IDH□6** are selected from **Data Ⓔ**.
➡ Move to Step **2**.

Selection Example ②

Condition		Data symbol
Inlet air temperature	30°C	Ⓐ
Ambient temperature	30°C	Ⓑ
Outlet air pressure dew point	5°C	Ⓒ
Inlet air pressure	0.5 MPa	Ⓓ
Outlet air set temperature	25°C	Ⓕ
Air flow	500 ℓ/min [ANR]	Ⓔ

IDH□4 or **IDH□6** are selected from **Data Ⓔ**.
➡ Move to Step **2**.

2 Read the correction factors.

Input the operating conditions in the table below and read the correction factors from the tables of **Data Ⓐ** to **Ⓓ**.

Condition		Data symbol	Correction factor
Inlet air temperature	20°C	Ⓐ	1.36
Ambient temperature	25°C	Ⓑ	1.07
Outlet air pressure dew point	3°C	Ⓒ	0.50
Inlet air pressure	1 MPa	Ⓓ	1.16
Outlet air set temperature	20°C	Ⓕ	—

Input the operating conditions in the table below and read the correction factors from the tables of **Data Ⓐ** to **Ⓓ**.

Condition		Data symbol	Correction factor
Inlet air temperature	30°C	Ⓐ	1.11
Ambient temperature	30°C	Ⓑ	1.00
Outlet air pressure dew point	5°C	Ⓒ	0.67
Inlet air pressure	0.5 MPa	Ⓓ	0.88
Outlet air set temperature	25°C	Ⓕ	—

3 Check the coefficient.

Correction factor = 1.36 × 1.07 × 0.50 × 1.16 = 0.84

Correction factor = 1.11 × 1 × 0.67 × 0.88 = 0.65

4 Calculate the corrected air flow capacity.

Corrected air flow capacity = 300 ÷ 0.84 = 355 ℓ/min [ANR]

Corrected air flow capacity = 500 ÷ 0.65 = 764 ℓ/min [ANR]

5 Selection by corrected air flow capacity

In case of Example ①, the next model is selected from **Data Ⓔ**: Air flow capacity.
Applicable model: **IDH□4**

In case of Example ②, the next model is selected from **Data Ⓔ**: Air flow capacity.
Applicable model: **IDH□6**

6 Check the outlet air set temperature.

Check the outlet air set temperature from Graph 1 of **Data Ⓕ**. Check the outlet air set temperature from the intersection point of the curve indicating a pressure dew point of 3°C and an air flow capacity of 300 ℓ/min [ANR].
➡ It is possible to confirm that the outlet air set temperature can be set up to 29°C.

Check the outlet air set temperature from Graph 2 of **Data Ⓕ**. Check the outlet air set temperature from the intersection point of the curve indicating a pressure dew point of 5°C and an air flow capacity of 500 ℓ/min [ANR].
➡ It is possible to confirm that the outlet air set temperature can be set up to 29°C.

7 Selection result

The model selected in Step **1** or **5** can be used.

Selection result: IDH□4

The model selected in Step **1** or **5** can be used.

Selection result: IDH□6

8 Selection of accessories

- Select the built-in products. (Refer to page 3.)
- Select the option. (Refer to page 3.)

- Select the built-in products. (Refer to page 3.)
- Select the option. (Refer to page 3.)

Correction Factors

Data Ⓐ Inlet Air Temperature

Inlet air temperature (°C)	Correction factor
20	1.36
25	1.24
30	1.11
35	1.00
40	0.87

Data Ⓒ Outlet Air Pressure Dew Point

Outlet air pressure dew point (°C)	Correction factor
3	0.50
5	0.67
7	0.85
10	1.00

Data Ⓔ Air Flow Capacity

Model	Air flow capacity (ℓ/min [ANR])							
	100	200	300	400	500	600	700	800
IDH□4								
IDH□6								

Data Ⓑ Ambient Temperature

Ambient temperature (°C)	Correction factor
15	1.27
20	1.17
25	1.07
30	1.00
35	0.87

Data Ⓓ Inlet Air Pressure

Inlet air pressure (MPa)	Correction factor	Inlet air pressure (MPa)	Correction factor
0.3	0.72	0.7	1.00
0.4	0.81	0.8	1.06
0.5	0.88	0.9	1.11
0.6	0.95	1.0	1.16

Selection Example③

Condition		Data symbol
Inlet air temperature	25°C	Ⓐ
Ambient temperature	25°C	Ⓑ
Outlet air pressure dew point	10°C	Ⓒ
Inlet air pressure	0.7 MPa	Ⓓ
Outlet air set temperature	30°C	Ⓕ
Air flow	700 ℓ/min [ANR]	Ⓔ

IDH□6 is selected from **Data Ⓔ.**
➡Move to Step **2**.

Input the operating conditions in the table below and read the correction factors from the tables of **Data Ⓐ** to **Ⓓ**.

Condition		Data symbol	Correction factor
Inlet air temperature	25°C	Ⓐ	1.24
Ambient temperature	25°C	Ⓑ	1.07
Outlet air pressure dew point	10°C	Ⓒ	1.00
Inlet air pressure	0.7 MPa	Ⓓ	1.00
Outlet air set temperature	30°C	Ⓕ	—

Correction factor = 1.24 × 1.07 × 1 × 1 = 1.33

If the correction factor is 1 or more, it is not necessary to calculate the corrected air flow capacity.
➡Move to Step **6**.

—

Check the outlet air set temperature from Graph 2 of **Data Ⓕ**. Check the outlet air set temperature from the intersection point of the curve indicating a pressure dew point of 10°C and an air flow capacity of 700 ℓ/min [ANR].
➡It is possible to confirm that the outlet air set temperature can be set up to 27°C.

It is not possible to control the required outlet air set temperature. Review the operating conditions.

—

Selection Example④

Condition		Data symbol
Inlet air temperature	30°C	Ⓐ
Ambient temperature	25°C	Ⓑ
Outlet air pressure dew point	10°C	Ⓒ
Inlet air pressure	1 MPa	Ⓓ
Outlet air set temperature	20°C	Ⓕ
Air flow	80 ℓ/min [ANR]	Ⓔ

Air flow of 80 ℓ/min is outside of the range of air flow capacity.

Condition		Data symbol	Correction factor
Inlet air temperature	—	—	—
Ambient temperature	—	—	—
Outlet air pressure dew point	—	—	—
Inlet air pressure	—	—	—
Outlet air set temperature	—	—	—

It is not necessary to calculate the factor.

—

—

—

It is not possible to control the required outlet air set temperature. Review the operating conditions.

—

Data Ⓕ Maximum Settable Temperature

Graph 1: IDH□4

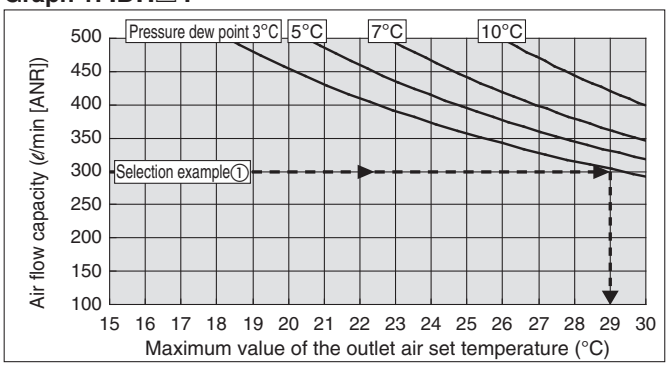

Graph 2: IDH□6

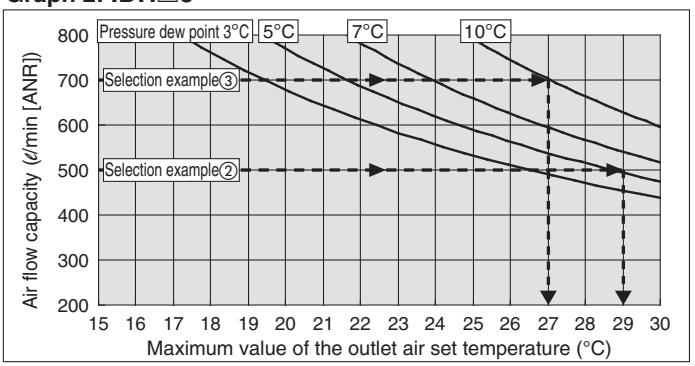

[Note] Select so that it does not exceed the maximum air flow capacity of each model (IDH□4: 500 ℓ/min, IDH□6: 800 ℓ/min).

Refrigerant R134a (HFC)

Series IDH□

How to Order

IDHA 6 – 23 □ – □

Size

Size	Rated air flow capacity	Air compressor size
4	400 ℓ/min [ANR]	3.7 kW
6	600 ℓ/min [ANR]	5.5 kW

Voltage

Symbol	Voltage
23	Single-phase 230 VAC (50/60 Hz)

Note) Other voltages available:100 VAC, 200 VAC (contact SMC).

Option

—	None (Standard)
E	Auto drain normally closed

Combination of built-in products

Symbol	Regulator	Filter① (AMH)	Filter② (AME)
—	●	●	●
A	●	●	—
B	●	—	—

Descripiton	Filter details
Filter① (AMH)	Micro mist separator with pre-filter · Nominal filtration rating: 0.01 µm (99.9% filtration efficiency) · Outlet oil mist concentration: MAX. 0.1 mg/m^3 [ANR] (≈0.08 ppm)
Filter② (AME)	Super mist separator · Nominal filtration rating: 0.01 µm (99.9% filtration efficiency) · Outlet oil mist concentration: MAX. 0.01 mg/m^3 [ANR] (≈0.008 ppm) · Outlet oil mist concentration: Particles of 0.3 µm or more: 3.5 particles/ℓ [ANR] or less

Optional Specifications

E Option symbol

Auto drain normally closed

The auto drain which exhausts dehumidified drainage and the auto drain on the built-in filter are changed to the "normally closed" specification. Recommended for small flow rate (100 to 150 ℓ/min).

Construction (Pneumatic/Refrigerant Circuit)

Pneumatic circuit

Hot and humid air entering this product is cooled down by the cooler. The moisture condensed at this time is separated by the drain separator and exhausted automatically. The pressure of the dry air is adjusted by the regulator, and oil mist and solid particles are separated by the micro mist separator with pre-filter and super mist separator. Note) The temperature of the dry and high purity air Note) is adjusted by the heater and supplied to the outlet side.

Note) The type without filter is not applicable.

Refrigerant circuit

The HFC gas contained in the refrigerant circuit is compressed by the compressor, and cooled and liquefied by the condenser. When passing through the capillary tube, the HFC gas is regulated and its temperature decreases. While passing through the cooler part, it evaporates rapidly, taking the heat from the compressed air, and is sucked in by the compressor. The capacity regulating valve opens when the compressed air has been cooled sufficiently, and prevents condensed water from being frozen by excessive cooling.

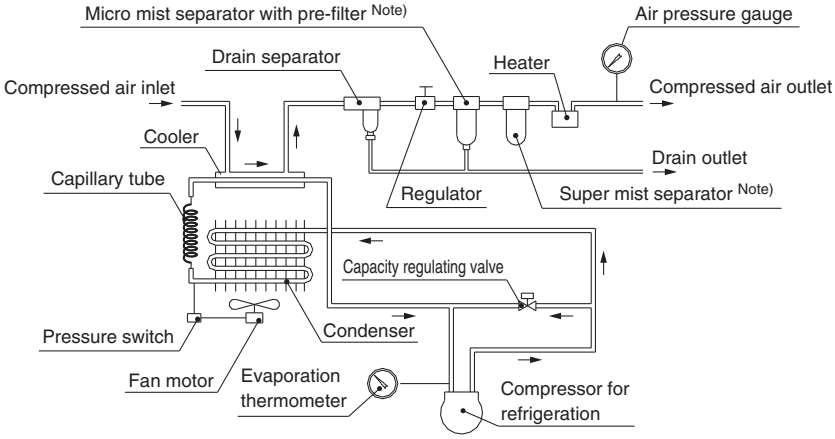

Standard Specifications

Specifications \ Model		IDHA4-23□	IDHA6-23□
Operating range Note1) 2)	Fluid	Compressed air	
	Air flow capacity	100 to 500 ℓ/min [ANR]	200 to 800 ℓ/min [ANR]
	Inlet air temperature	5 to 40°C	
	Inlet air pressure	0.3 to 1.0 MPa	
	Ambient temperature	15 to 35°C (Relative humidity 85% or less)	
	Outlet air temperature adjustment range	15 to 30°C	
	Outlet air set pressure range	0.15 to 0.85 MPa (The inlet air pressure should be at least 0.15 MPa higher than the outlet air pressure.)	
Rated conditions	Air flow capacity	400 ℓ/min [ANR]	600 ℓ/min [ANR]
	Inlet air pressure	0.7 MPa	
	Inlet air temperature	35°C	
	Ambient temperature	30°C	
	Outlet air set temperature	30°C	
Rated performance Note 3)	Outlet air pressure dew point	10°C	
	Outlet air temperature stability	±0.1°C	
	Outlet air temperature display accuracy	±0.5°C (including accuracy of the sensor)	
Electric specifications	Power supply Note 4)	Single–phase 230 VAC (50/60 Hz)	Single–phase 230 VAC (50/60 Hz)
	Operating current	2.1 A	4.8 A
	Earth leakage breaker capacity	5 A	10 A
	Compressor input	180/200 W 50/60 Hz	385/440 W 50/60 Hz
	Heater input	220 W	420 W
Built-in filter specifications Note 5)	Nominal filtration rating	0.01 µm (99.9% filtration efficiency)	
	Cleanliness of the filter outlet side	Particles of 0.3 µm or more: 3.5 particles/ℓ [ANR] or less	
Temperature control method		Heater operation, PID control	
Refrigerant type/Refrigerant charge		R134a/0.14 kg	R134a/0.26 kg
Noise level (reference value) Note 6)		52 dB(A)	55 dB(A)
Weight		26 kg	37 kg
Applicable drain tube O.D.		10 mm	
Coating colour		Body panel: White 1 Base: Grey 2	
Applicable directive		Low Voltage Directive: 2006/95/EC EMC Directive: 2004/108/EC	

Note 1) ANR is the value at 20°C, atmospheric pressure, and relative humidity of 65%.
Note 2) The upper limit of the settable outlet air temperature varies depending on the conditions even within the operating range. Be sure to read the selection document before selecting the models.
Note 3) Performance when the operation of each part is stable without fluctuations in operating conditions and power supply
Note 4) Keep the voltage within -5 to +10% of the rated voltage. If there is voltage fluctuation, the outlet air temperature stability may decrease. So if highly accurate temperature adjustment is required, please use a stable power supply to make the voltage fluctuation smaller.
Note 5) The specification changes depending on the cleanliness of the inlet side air. It may take time until the cleanliness of the filter outlet side air stabilises immediately after start of operation. The filter performance only applies to the built-in type filter.
Note 6) 1 m in front of the product, 1 m in height, without load, stable conditions

Output Signal

Specifications

Description	Terminal no.	Description of operation	Contact capacity	Minimum load
Operating signal N.O. (a contact)	1-2	Close after 10 minutes of operation	Resistance load 2 A, Induction load 80 VA, Lamp load 100 W	5 VDC 2 mA
Error signal N.C. (b contact)	3-4	Open at an emergency stop or set temperature error		
Error signal N.O. (a contact)	4-5	Close at an emergency stop or set temperature error		

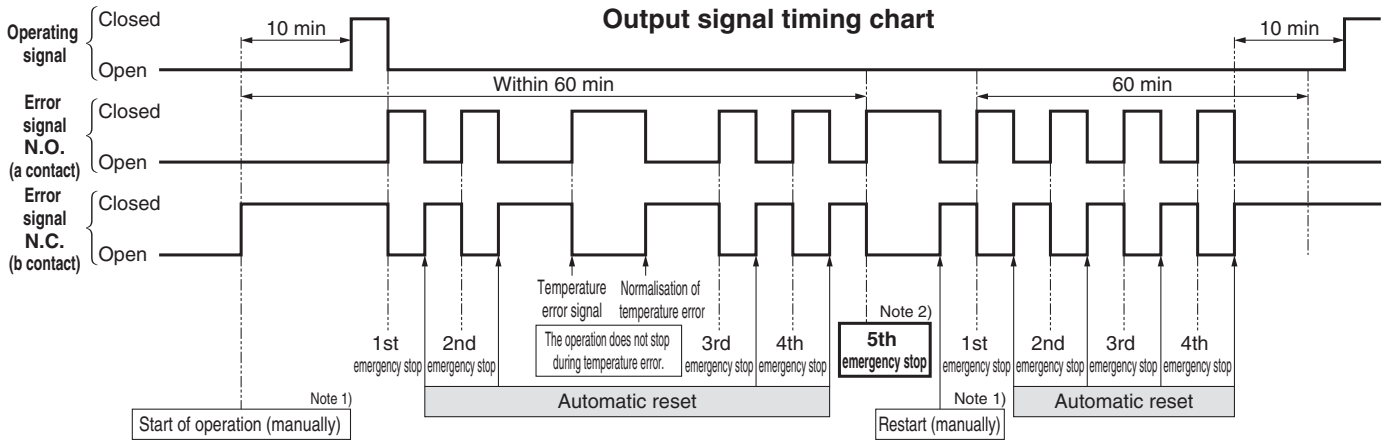

Note 1) The operation can be started or restarted (manually) by the operation stop switch mounted on the thermo-dryer or a remote switch prepared by the user.
Note 2) When emergency stop is generated 5 times in an hour or the heater protection equipment (thermo-stat) is operated, the emergency stop status will be held. At this time, the dryer can be restarted by reset operation using the switch stated in Note 1.

Dimensions

IDH□4

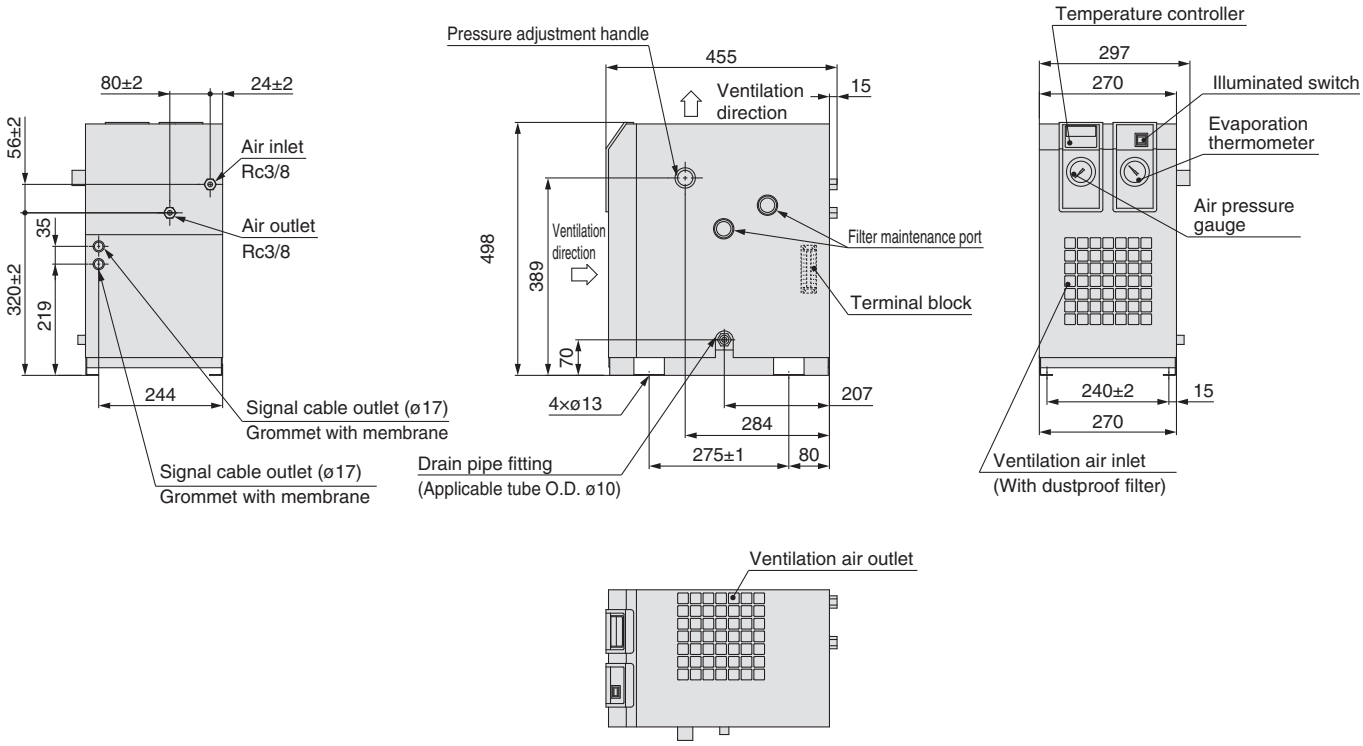

IDH□6

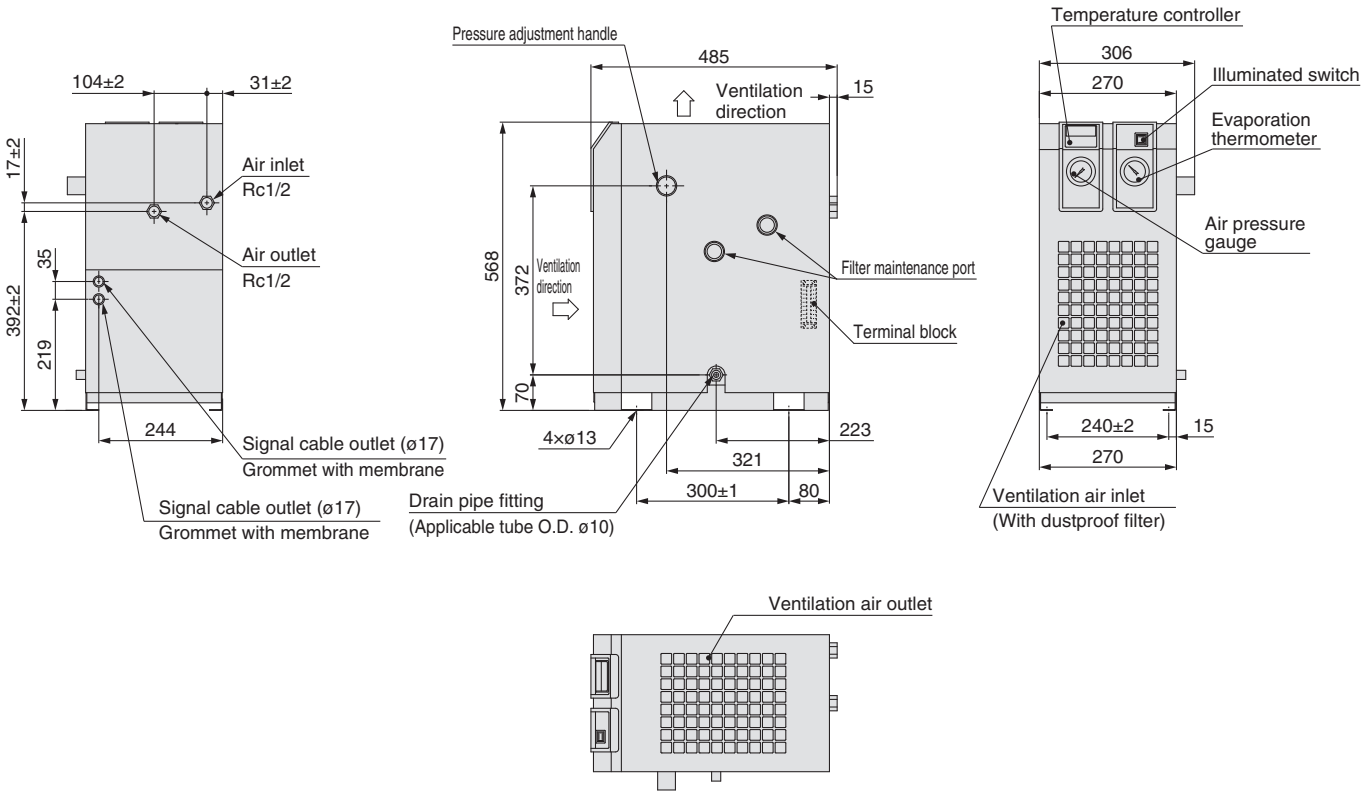

Data

Condensed Water Calculation

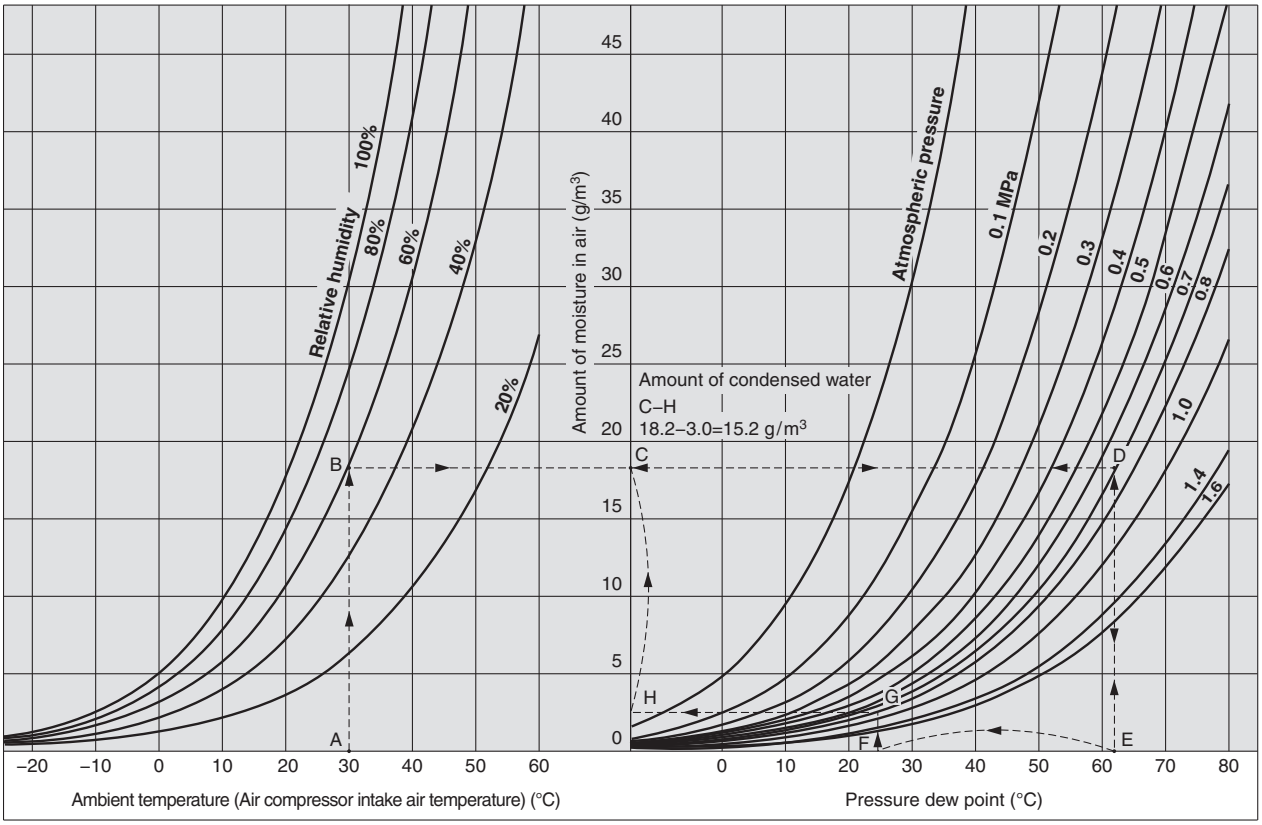

Dew Point Conversion Chart

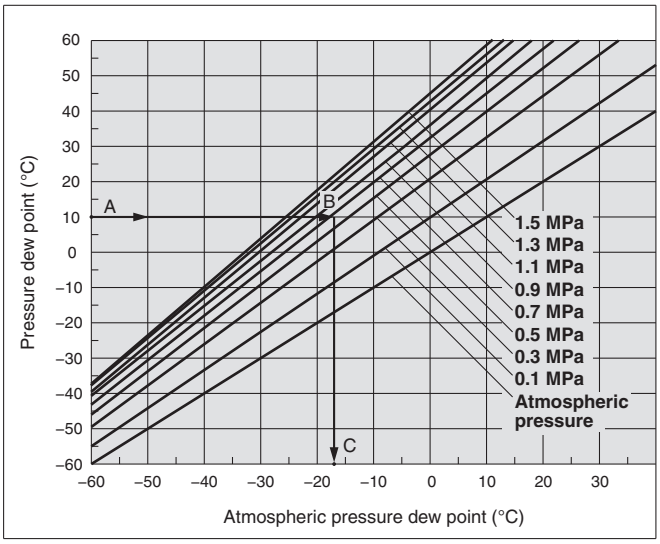

How to read the dew point conversion chart

Example) To obtain the atmospheric pressure dew point at a pressure dew point 10°C and a pressure 0.7 MPa.

1. Trace the arrow mark → starting from the point A at a pressure dew point 10°C to obtain the intersection B on the pressure characteristic line for 0.7 MPa.
2. Trace the arrow mark → starting from the point B to obtain the intersection C at the dew point under atmospheric pressure.
3. The intersection C is the conversion value –17°C under atmospheric pressure dew point.

How to calculate the amount of condensed water

Example) To obtain the amount of condensed water when the pressure is applied to air up to 0.7 MPa with an air compressor, then cooled down to 25°C. Given an ambient temperature at 30°C and a relative humidity 60%.

1. Trace the arrow mark from the point A at an ambient temperature 30°C to obtain the intersection B on the curved line for the relative humidity 60%.
2. Trace the arrow mark from the intersection B to obtain the intersection D on the pressure characteristic line for 0.7 MPa.
3. Trace the arrow mark from the intersection D to obtain the intersection E.
4. The intersection E is the dew point under pressure 0.7 MPa with an ambient temperature 30°C and a relative humidity 60%. The value for E is 62°C.
5. Trace the intersection E upward, and trace from the intersection D leftward to obtain the intersection C.
6. The intersection C is the amount of moisture included in the compressed air 1 m³ at 0.7 MPa and a pressure dew point 62°C. **The amount of moisture is 18.2 g/m³.**
7. Trace the arrow mark, starting from F for cooling temperature 25°C (pressure dew point 25°C) to obtain the intersection G on the pressure characteristic line for 0.7 MPa.
8. From the intersection G, trace the arrow mark to obtain the intersection H on the vertical axis.
9. The intersection H is the amount of moisture included in the compressed air 1 m³ at 0.7 MPa, and a pressure dew point 25°C. **The amount of moisture is 3.0 g/m³.**
10. Therefore, the amount of condensed water is as follows (per 1 m³):

The amount of moisture at the intersection C – the amount of moisture at the intersection H = the amount of condensed water
18.2 – 3.0 = 15.2 g/m³

Specific Product Precautions

Be sure to read before handling. Refer to back cover for Safety Instructions, "Handling Precautions for SMC Products" (M-E03-3) for Air Preparation Equipment Precautions.

Design

⚠ Caution

1. Design a layout in which the dripping of condensation is taken into consideration.
Depending on the operating conditions, the product and its downstream pipes could drip water due to condensation formed by supercooling.

2. Provide a design that prevents back pressure and back flow.
The generation of back pressure and back flow could lead to equipment damage. Take appropriate safety measures and proper installation procedures.

3. Do not introduce an air flow that is greater than the maximum flow rate.
If the maximum flow rate is momentarily exceeded, it could lead to insufficient dehumidification, fluctuation in the controlled temperature, splashing of drainage and oil on the outlet side, and damage to the equipment.

4. When large quantities of dust (solid foreign matter) or water droplets are contained in the supply air, install an air filter on the upstream side of the thermo-dryer.
- When there are large quantities of dust (solid foreign matter), install a main line filter or mist separator.
- When large quantities of water droplets are contained, install a water separator.

5. Do not use the product with low pressure (blowers).
Each and every piece of air preparation equipment which is designed for use with compressed air, including thermo-dryers, has a minimum operating pressure. Use below the minimum operating pressure could lower performance or a malfunction. Contact SMC beforehand if use in such a situation is unavoidable.

Mounting

⚠ Warning

1. Ensure sufficient space for maintenance activities.
When installing the products, allow access for maintenance.
[Space required for maintenance]
Front: 600 mm Back: 600 mm
Top: 600 mm Right side: 600 mm Left side: 600 mm

⚠ Caution

1. Provide ventilation space.
Unless a necessary ventilation space for each piece of equipment is provided, this product could cool poorly or stall.
[Space required for installation]
Front: 600 mm Back: — mm
Top: 600 mm Right side: 600 mm Left side: — mm
∗Allow sufficient space for piping on the back and left sides.

Installation

⚠ Caution

1. Avoid locations where the dryer will be in direct contact with wind or rain. (Avoid locations where relative humidity is 85% or more.)

2. Avoid exposure to direct sunlight.

3. Avoid locations that contain much dust, corrosive gases, or flammable gases.

4. Avoid locations of poor ventilation and high temperature.

5. Avoid locations where there is a strong magnetic noise (strong electric field, strong magnetic field, or surge).

6. Avoid locations or conditions where static electricity is discharged to the body.

Installation

⚠ Caution

7. Avoid locations where temperature rapidly changes.

8. Avoid locations where the dryer is likely to be damaged by lightning.

9. Avoid locations with an altitude of 2,000 m or higher. (Storage and transportation are not included.)

10. Avoid possible locations where the dryer could draw in high temperature air discharged from an air compressor or other dryer.

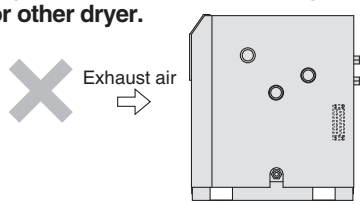

Confirm that the exhaust air does not flow into the neighboring equipment.

11. Avoid locations where strong impact or vibration is applied.

12. Avoid conditions where external force or weight that could deform the dryer is applied.

13. Avoid possible locations where the drain can freeze.

14. Avoid installation on machines for transporting, such as vehicles, ships, etc.

Air Piping

⚠ Caution

1. Be careful to avoid an error in connecting the air piping at the compressed air inlet (IN) and outlet (OUT).

2. Install a bypass piping since it is needed for maintenance.

3. When tightening piping at the air inlet/outlet tube, the hexagonal parts of the port on the product should be held firmly with a wrench or adjustable angle wrench.

4. The control temperature may fluctuate or condense due to the effect of ambient temperature. Be sure to wind heat resistant material around the outlet air piping.

5. Confirm that vibrations resulting from the compressor are not transmitted through the air piping to the product.

6. Do not allow the weight of the piping to lie directly on the product.

Wiring

⚠ Caution

1. Verify the power supply voltage.
Operating the equipment with a voltage that is out of specification could lead to a fire or an electrical shock. Verify the power supply and the voltage before wiring. The voltage fluctuation must be within the following specifications. Restarting: Rated voltage ±10% Operation: Rated voltage -5% to +10%.

2. Wire with appropriate size terminal.
When connecting a power supply cord to equipment with a terminal box, use a terminal applicable to the terminal box. If an incorrect terminal size is used, it may cause a fire.

3. Installing ground
Provide a ground connection to prevent earth leakage. Do not connect the ground wire to a water pipe or a gas pipe due to a risk of explosion.

4. Have the wiring done by a qualified professional.
Only a qualified professional should carry out wiring work such as connecting to the terminal block.

⚠ Safety Instructions

These safety instructions are intended to prevent hazardous situations and/or equipment damage. These instructions indicate the level of potential hazard with the labels of **"Caution," "Warning"** or **"Danger."** They are all important notes for safety and must be followed in addition to International Standards (ISO/IEC)*1), and other safety regulations.

⚠ Caution: **Caution** indicates a hazard with a low level of risk which, if not avoided, could result in minor or moderate injury.

⚠ Warning: **Warning** indicates a hazard with a medium level of risk which, if not avoided, could result in death or serious injury.

⚠ Danger : **Danger** indicates a hazard with a high level of risk which, if not avoided, will result in death or serious injury.

*1) ISO 4414: Pneumatic fluid power – General rules relating to systems.
ISO 4413: Hydraulic fluid power – General rules relating to systems.
IEC 60204-1: Safety of machinery – Electrical equipment of machines. (Part 1: General requirements)
ISO 10218-1: Manipulating industrial robots - Safety.
etc.

⚠ Warning

1. **The compatibility of the product is the responsibility of the person who designs the equipment or decides its specifications.**
   Since the product specified here is used under various operating conditions, its compatibility with specific equipment must be decided by the person who designs the equipment or decides its specifications based on necessary analysis and test results. The expected performance and safety assurance of the equipment will be the responsibility of the person who has determined its compatibility with the product. This person should also continuously review all specifications of the product referring to its latest catalogue information, with a view to giving due consideration to any possibility of equipment failure when configuring the equipment.
2. **Only personnel with appropriate training should operate machinery and equipment.**
   The product specified here may become unsafe if handled incorrectly. The assembly, operation and maintenance of machines or equipment including our products must be performed by an operator who is appropriately trained and experienced.
3. **Do not service or attempt to remove product and machinery/equipment until safety is confirmed.**
   1. The inspection and maintenance of machinery/equipment should only be performed after measures to prevent falling or runaway of the driven objects have been confirmed.
   2. When the product is to be removed, confirm that the safety measures as mentioned above are implemented and the power from any appropriate source is cut, and read and understand the specific product precautions of all relevant products carefully.
   3. Before machinery/equipment is restarted, take measures to prevent unexpected operation and malfunction.
4. **Contact SMC beforehand and take special consideration of safety measures if the product is to be used in any of the following conditions.**
   1. Conditions and environments outside of the given specifications, or use outdoors or in a place exposed to direct sunlight.
   2. Installation on equipment in conjunction with atomic energy, railways, air navigation, space, shipping, vehicles, military, medical treatment, combustion and recreation, or equipment in contact with food and beverages, emergency stop circuits, clutch and brake circuits in press applications, safety equipment or other applications unsuitable for the standard specifications described in the product catalogue.
   3. An application which could have negative effects on people, property, or animals requiring special safety analysis.
   4. Use in an interlock circuit, which requires the provision of double interlock for possible failure by using a mechanical protective function, and periodical checks to confirm proper operation.

⚠ Caution

1. **The product is provided for use in manufacturing industries.**
   The product herein described is basically provided for peaceful use in manufacturing industries.
   If considering using the product in other industries, consult SMC beforehand and exchange specifications or a contract if necessary.
   If anything is unclear, contact your nearest sales branch.

Limited warranty and Disclaimer/ Compliance Requirements

The product used is subject to the following "Limited warranty and Disclaimer" and "Compliance Requirements".
Read and accept them before using the product.

Limited warranty and Disclaimer

1. The warranty period of the product is 1 year in service or 1.5 years after the product is delivered.*2)
   Also, the product may have specified durability, running distance or replacement parts. Please consult your nearest sales branch.
2. For any failure or damage reported within the warranty period which is clearly our responsibility, a replacement product or necessary parts will be provided.
   This limited warranty applies only to our product independently, and not to any other damage incurred due to the failure of the product.
3. Prior to using SMC products, please read and understand the warranty terms and disclaimers noted in the specified catalogue for the particular products.

*2) **Vacuum pads are excluded from this 1 year warranty.**
A vacuum pad is a consumable part, so it is warranted for a year after it is delivered.
Also, even within the warranty period, the wear of a product due to the use of the vacuum pad or failure due to the deterioration of rubber material are not covered by the limited warranty.

Compliance Requirements

1. The use of SMC products with production equipment for the manufacture of weapons of mass destruction (WMD) or any other weapon is strictly prohibited.
2. The exports of SMC products or technology from one country to another are governed by the relevant security laws and regulations of the countries involved in the transaction. Prior to the shipment of a SMC product to another country, assure that all local rules governing that export are known and followed.

⚠ Safety Instructions Be sure to read "Handling Precautions for SMC Products" (M-E03-3) before using.

SMC Corporation (Europe)

Austria	☎ +43 (0)2262622800	www.smc.at	office@smc.at
Belgium	☎ +32 (0)33551464	www.smcpneumatics.be	info@smcpneumatics.be
Bulgaria	☎ +359 (0)2807670	www.smc.bg	office@smc.bg
Croatia	☎ +385 (0)13707288	www.smc.hr	office@smc.hr
Czech Republic	☎ +420 541424611	www.smc.cz	office@smc.cz
Denmark	☎ +45 70252900	www.smcdk.com	smc@smcdk.com
Estonia	☎ +372 6510370	www.smcpneumatics.ee	smc@smcpneumatics.ee
Finland	☎ +358 207513513	www.smc.fi	smcfi@smc.fi
France	☎ +33 (0)164761000	www.smc-france.fr	promotion@smc-france.fr
Germany	☎ +49 (0)61034020	www.smc-pneumatik.de	info@smc-pneumatik.de
Greece	☎ +30 210 2717265	www.smchellas.gr	sales@smchellas.gr
Hungary	☎ +36 23511390	www.smc.hu	office@smc.hu
Ireland	☎ +353 (0)14039000	www.smcpneumatics.ie	sales@smcpneumatics.ie
Italy	☎ +39 0292711	www.smcitalia.it	mailbox@smcitalia.it
Latvia	☎ +371 67817700	www.smclv.lv	info@smclv.lv
Lithuania	☎ +370 5 2308118	www.smclt.lt	info@smclt.lt
Netherlands	☎ +31 (0)205318888	www.smcpneumatics.nl	info@smcpneumatics.nl
Norway	☎ +47 67129020	www.smc-norge.no	post@smc-norge.no
Poland	☎ +48 (0)222119616	www.smc.pl	office@smc.pl
Portugal	☎ +351 226166570	www.smc.eu	postpt@smc.smces.es
Romania	☎ +40 213205111	www.smcromania.ro	smcromania@smcromania.ro
Russia	☎ +7 8127185445	www.smc-pneumatik.ru	info@smc-pneumatik.ru
Slovakia	☎ +421 (0)413213212	www.smc.sk	office@smc.sk
Slovenia	☎ +386 (0)73885412	www.smc.si	office@smc.si
Spain	☎ +34 945184100	www.smc.eu	post@smc.smces.es
Sweden	☎ +46 (0)86031200	www.smc.nu	post@smc.nu
Switzerland	☎ +41 (0)523963131	www.smc.ch	info@smc.ch
Turkey	☎ +90 212 489 0 440	www.smcpnomatik.com.tr	info@smcpnomatik.com.tr
UK	☎ +44 (0)845 121 5122	www.smcpneumatics.co.uk	sales@smcpneumatics.co.uk

SMC CORPORATION Akihabara UDX 15F, 4-14-1, Sotokanda, Chiyoda-ku, Tokyo 101-0021, JAPAN Phone: 03-5207-8249 FAX: 03-5298-5362

1st printing PW printing PW 00 Printed in Spain