Model with Residual Pressure Release Function **Push-lock Type**

Speed Controller with Pilot Check Valve

New

RoHS

Model with Residual Pressure Release Function

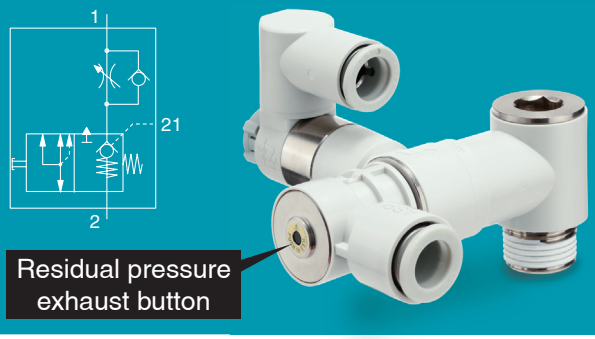

Model without Residual Pressure Release Function



It is possible to construct a safety circuit!

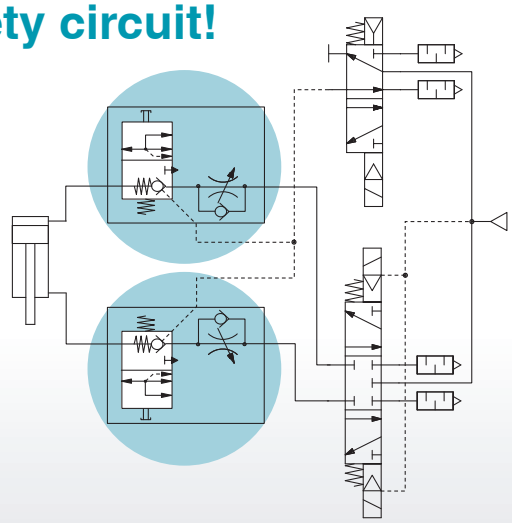

Temporary intermediate stops are possible.*1

*1 Precise intermediate stops are not guaranteed.

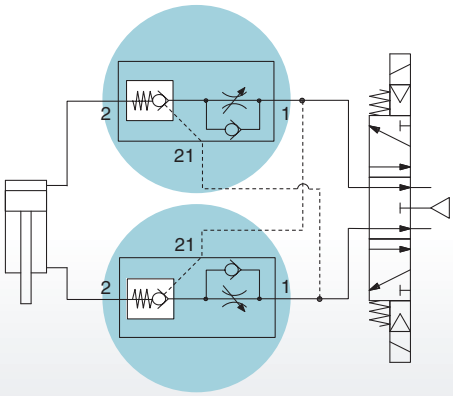

Variations

	Universal	Port size	Pilot port size	Applicable tubing O.D. Metric size
Horizontal		M5, 10-32UNF	4, 6, 8, 10, 12	4, 6, 8, 10, 12
		1/8, 1/4, 3/8, 1/2 (R, NPT, G)		
Vertical	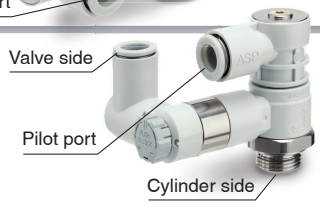	M5, 10-32UNF	4, 6, 8, 10, 12	4, 6, 8, 10, 12
		1/8, 1/4, 3/8, 1/2 (G)		

ASP Series

SMC

CAT.EUS20-298A-UK

Vertical and horizontal types are available, which can be selected depending on the installation conditions.

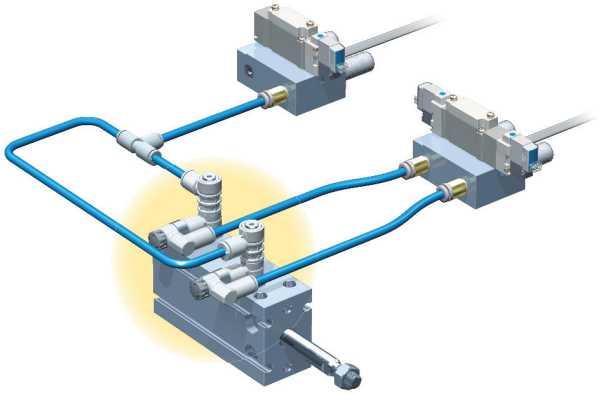



Horizontal Universal type



Vertical Universal type

Improved piping design flexibility (360°-rotation type)



Pilot Check Valve Variations by Function

Series	Pilot check valve	Pilot check valve + Residual pressure release valve	Pilot check valve + Speed controller	Pilot check valve + Speed controller + Residual pressure release valve	Page
Compact Type **ASP** 	—	—	●	●	p. 2
Compact Type **AKP** 	●	●	—	—	**Catalogue on https://www.smc.eu**
Metal Body Type **AS-X785** 	●	—	—	—	**Catalogue on https://www.smc.eu**

Model with Residual Pressure Release Function **Push-lock Type**

Speed Controller with Pilot Check Valve

ASP Series

RoHS

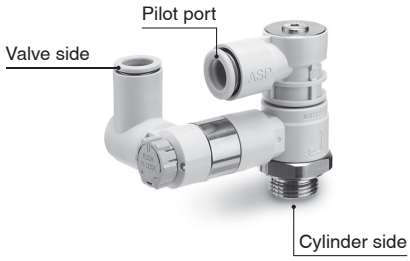

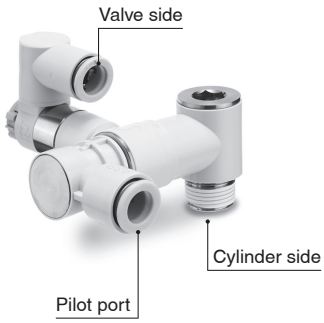

Symbol

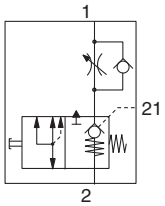

Model with residual pressure release function

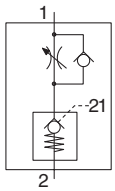

Model without residual pressure release function

⚠ Caution

Be sure to read this before handling the products. Refer to the back cover for safety instructions. For flow control equipment precautions, refer to the "Handling Precautions for SMC Products" and the "Operation Manual" on the SMC website: https://www.smc.eu

Model

Vertical type

Port size	Pilot port size	Applicable tubing O.D. Metric size				
		4	6	8	10	12
M5 x 0.8	Ø 4	●	●	—	—	—
10-32UNF		●	●	—	—	—
G1/8	Ø 6	—	●	—	—	—
G1/4	Ø 8	—	—	●	—	—
G3/8	Ø 10	—	—	—	●	—
G1/2	Ø 12	—	—	—	—	●

Horizontal type

Port size	Pilot port size	Applicable tubing O.D. Metric size				
		4	6	8	10	12
M5 x 0.8	Ø 4	●	●	—	—	—
10-32UNF		●	●	—	—	—
R1/8	Ø 6	—	●	—	—	—
NPT1/8		—	●	—	—	—
G1/8		—	●	—	—	—
R1/4	Ø 8	—	—	●	—	—
NPT1/4		—	—	●	—	—
G1/4		—	—	●	—	—
R3/8	Ø 10	—	—	—	●	—
NPT3/8		—	—	—	●	—
G3/8		—	—	—	●	—
R1/2	Ø 12	—	—	—	—	●
NPT1/2		—	—	—	—	●
G1/2		—	—	—	—	●

Specifications

Fluid	Air
Proof pressure	1.05 MPa
Max. operating pressure	0.7 MPa
Min. operating pressure	0.1 MPa
Pilot check valve operating pressure	50 % or more of the cylinder supply pressure {0.1 (0.15*1) MPa or more}
Ambient and fluid temperatures	-5 to 60 °C (No freezing)
Applicable tubing material	Nylon, Soft nylon, Polyurethane, FEP, PFA*2

*1 The value in brackets is for the AKP-□-M5/U10.
*2 Use caution at the max. operating pressure when using soft nylon or polyurethane tubing. (Refer to the **Catalogue on https://www.smc.eu** for details.)

Flow Rate and Sonic Conductance

Model		ASP-□-M5/U10	ASP-□-□01	ASP-□-□02	ASP-□-□03	ASP-□-□04
Tubing O.D.	Metric size	Ø 4 Ø 6	Ø 6	Ø 8	Ø 10	Ø 12
C values: Sonic conductance $dm^3/(s \cdot bar)$	Free flow	0.25	0.58	1.06	2.19	3.43
	Controlled flow	0.22	0.46	1.06	1.69	3.09
b values: Critical pressure ratio	Free flow	0.20	0.20	0.15	0.15	0.20
	Controlled flow	0.30	0.20	0.25	0.20	0.30
Q [l/min (ANR)]*1	Free flow	60	139	247	510	822
	Controlled flow	56	110	261	405	786

*1 These values have been calculated according to ISO 6358 and indicate the flow rate under standard conditions with an inlet pressure of 0.6 MPa (relative pressure) and a pressure drop of 0.1 MPa.



How to Order



Vertical type **ASP – U A 06 E – G 01**



Horizontal type **ASP – U B 06 E – 01 S**

Type

U	Universal

Piping type

A	Vertical
B	Horizontal

Applicable tubing O.D.

Metric size	
04	ϕ4
06	ϕ6
08	ϕ8
10	ϕ10
12	ϕ12

* For selecting applicable tubing O.D., refer to the "Model" on page 2.

Residual pressure release

—	Without
E	With

Thread type

—	R
N	NPT
G	G

* Select (R: —) for connection thread port size M5 or U10.

Port size

M5*1	M5 x 0.8
U10*1	10-32UNF
01	1/8
02	1/4
03	3/8
04	1/2

*1 Use the M5 or U10 port size model in a circuit that uses an exhaust center valve. These sizes cannot be used in a circuit that uses a closed center valve only because the responsiveness of the intermediate stop of the actuator may be slow. Therefore, if you want to use those models in a circuit with a closed center valve only, contact us.

Seal method

—	Without sealant
S	With sealant

* Select "—: Without sealant" for M5, 10-32UNF, and G thread types.
Example) ASP-UA04E-G01

Construction

Vertical Universal type

Seal method: Gasket seal
For M5, 10-32UNF

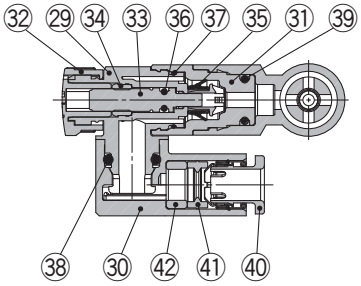

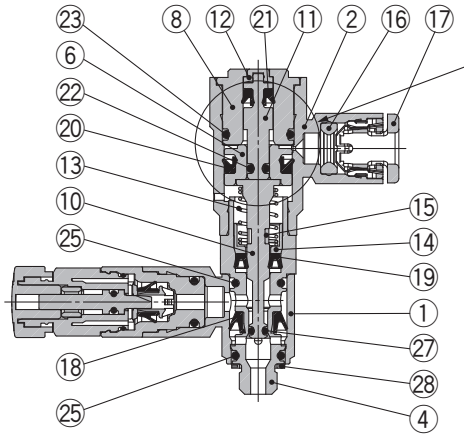

Model with residual pressure release function

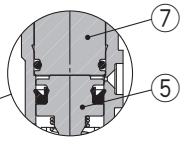

Model without residual pressure release function

Horizontal Universal type

Seal method: Gasket seal
For M5, 10-32UNF

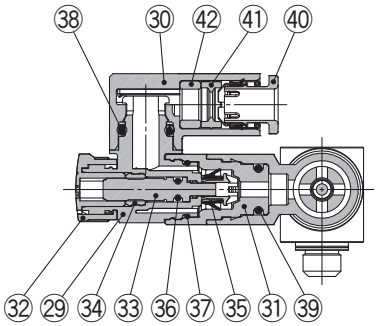

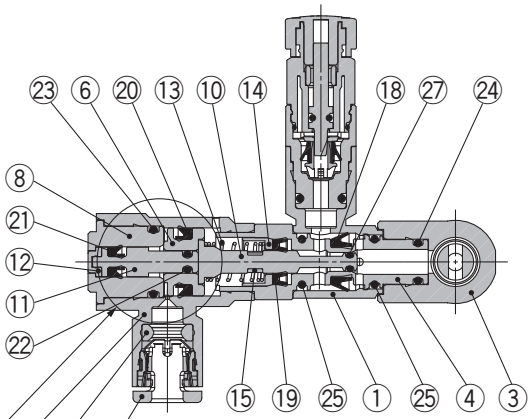

Model with residual pressure release function

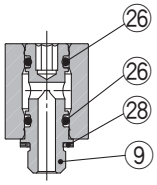

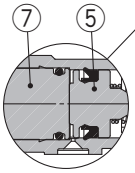

Model without residual pressure release function

Component Parts

No.	Description	Material	Note
1	**Body A**	PBT	
2	**Pilot body**	PBT	
3	**End body**	PBT	
4	**Body B**	Brass	Electroless nickel plating
5	**Piston A**	Brass	Electroless nickel plating
6	**Piston B**	Brass	Electroless nickel plating
7	**End cover A**	Brass	Electroless nickel plating
8	**End cover B**	Brass	Electroless nickel plating
9	**Stud**	Brass	Electroless nickel plating
10	**Piston rod**	Brass	Electroless nickel plating
11	**Push rod**	Aluminium alloy	
12	**Push rod cover**	PBT	
13	**Spring**	Stainless steel	
14	**Seal retainer**	Brass	Electroless nickel plating
15	**Exhaust ring**	POM	
16	**Seal**	NBR	
17	**Cassette**	—	
18	**Seal**	HNBR	
19	**Seal**	NBR	
20	**Seal**	NBR	
21	**Seal**	NBR	

No.	Description	Material	Note
22	**O-ring**	NBR	
23	**O-ring**	NBR	
24	**O-ring**	NBR	
25	**O-ring**	NBR	
26	**O-ring**	NBR	
27	**O-ring**	NBR	
28	**Gasket**	NBR	
29	**Body A**	PBT	
30	**Elbow body**	PBT	
31	**Body B**	Brass	Electroless nickel plating
32	**Knob**	POM	
33	**Needle**	PBT	
34	**Needle guide**	Brass	Electroless nickel plating
35	**Seal**	HNBR	
36	**O-ring**	NBR	
37	**O-ring**	NBR	
38	**O-ring**	NBR	
39	**O-ring**	NBR	
40	**Cassette**	—	
41	**Seal**	NBR	
42	**Spacer**	PBT	

Construction

Vertical **Universal type**

Seal method: Face seal
For G

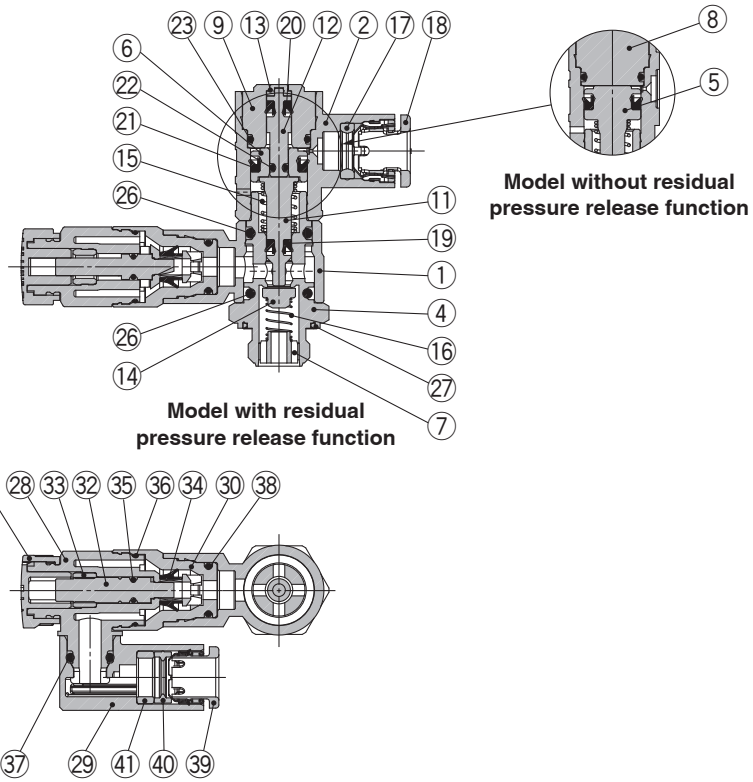

Horizontal **Universal type**

Seal method: Face seal
For G

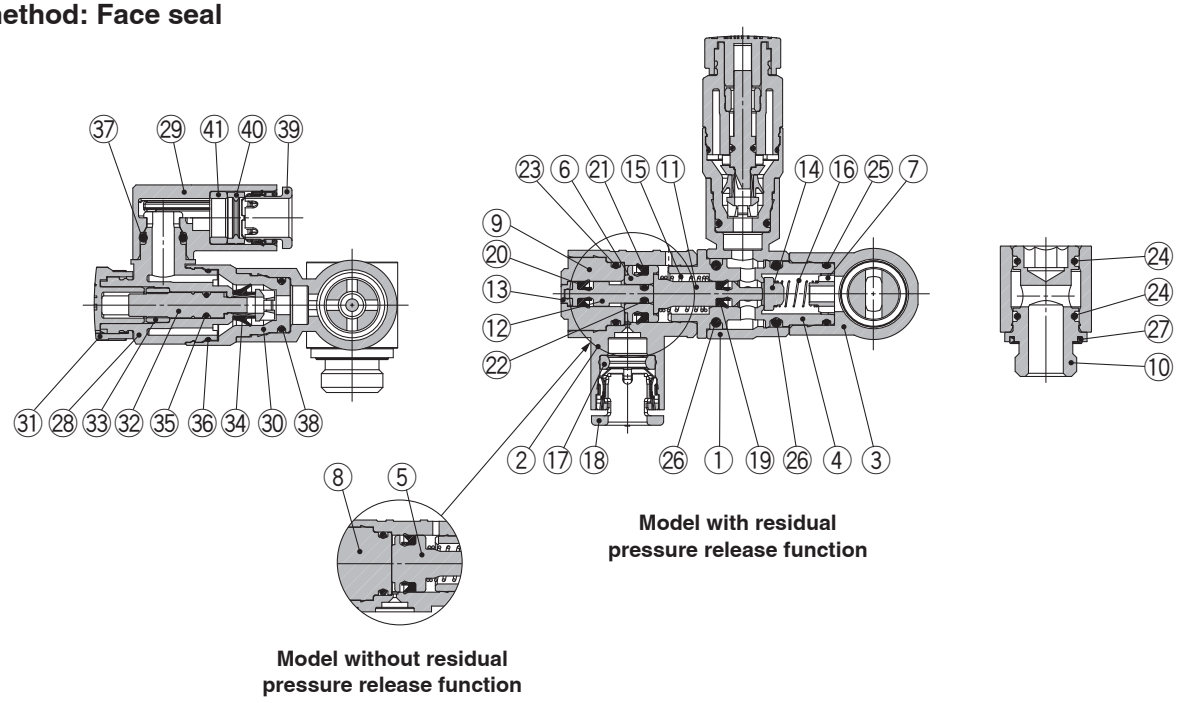

Construction

Horizontal **Universal type**

Seal method: Sealant
For R, NPT thread

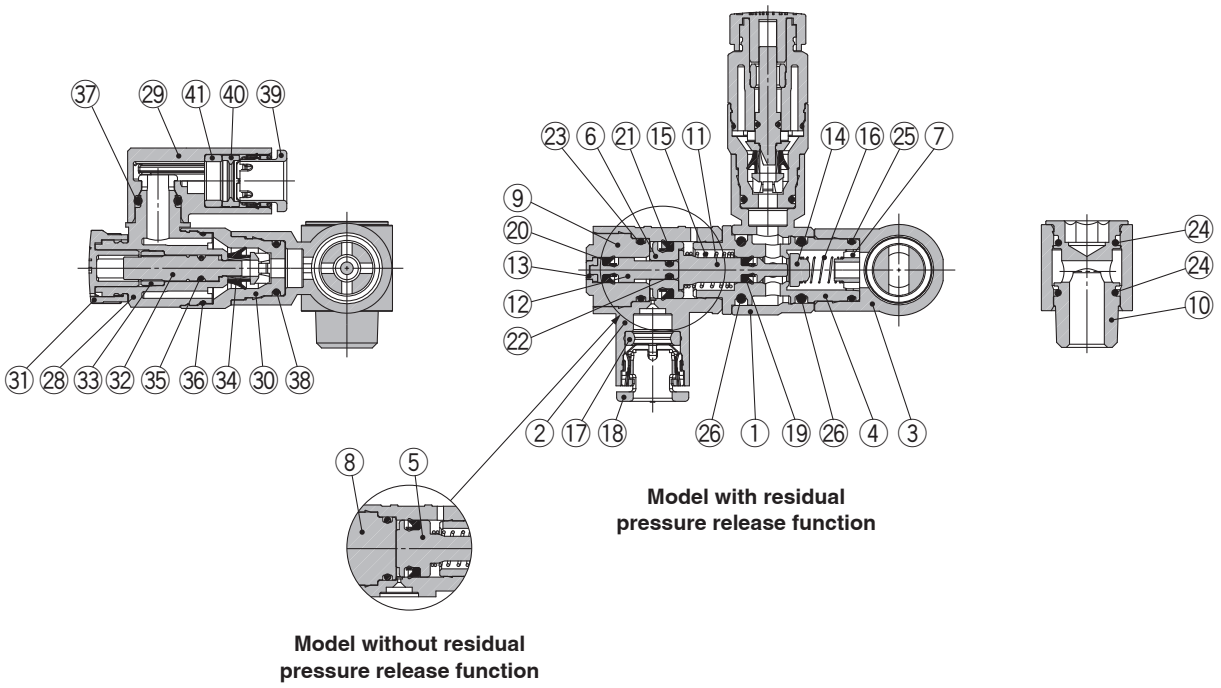

Model with residual pressure release function

Model without residual pressure release function

Component Parts

No.	Description	Material	Note
1	**Body A**	PBT	
2	**Pilot body**	PBT	
3	**End body**	PBT	
4	**Body B**	Brass	Electroless nickel plating
5	**Piston A**	Brass	Electroless nickel plating
6	**Piston B**	Brass	Electroless nickel plating
7	**Spring guide**	Brass	Electroless nickel plating
8	**End cover A**	Brass	Electroless nickel plating
9	**End cover B**	Brass	Electroless nickel plating
10	**Stud**	Brass	Electroless nickel plating
11	**Piston rod**	Brass	Electroless nickel plating
12	**Push rod**	Aluminium alloy	
13	**Push rod cover**	PBT	
14	**Valve**	NBR	
15	**Spring**	Stainless steel	
16	**Spring**	Stainless steel	
17	**Seal**	NBR	
18	**Cassette**	—	
19	**Seal**	NBR	
20	**Seal**	NBR	
21	**Seal**	NBR	

No.	Description	Material	Note
22	**O-ring**	NBR	
23	**O-ring**	NBR	
24	**O-ring**	NBR	
25	**O-ring**	NBR	
26	**O-ring**	NBR	
27	**Seal ring**	NBR	
28	**Body A**	PBT	
29	**Elbow body**	PBT	
30	**Body B**	Brass	Electroless nickel plating
31	**Knob**	POM	
32	**Needle**	PBT	
33	**Needle guide**	Brass	Electroless nickel plating
34	**Seal**	HNBR	
35	**O-ring**	NBR	
36	**O-ring**	NBR	
37	**O-ring**	NBR	
38	**O-ring**	NBR	
39	**Cassette**	—	
40	**Seal**	NBR	
41	**Spacer**	PBT	

Dimensions

Horizontal **Universal type**

Seal method: Gasket seal
For M5, 10-32UNF

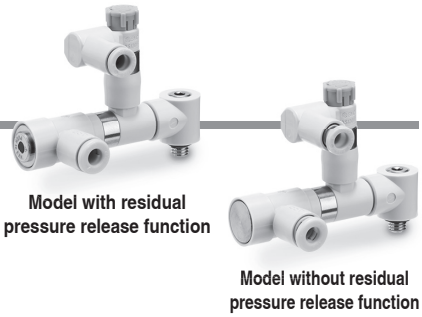

Model with residual pressure release function

Model without residual pressure release function

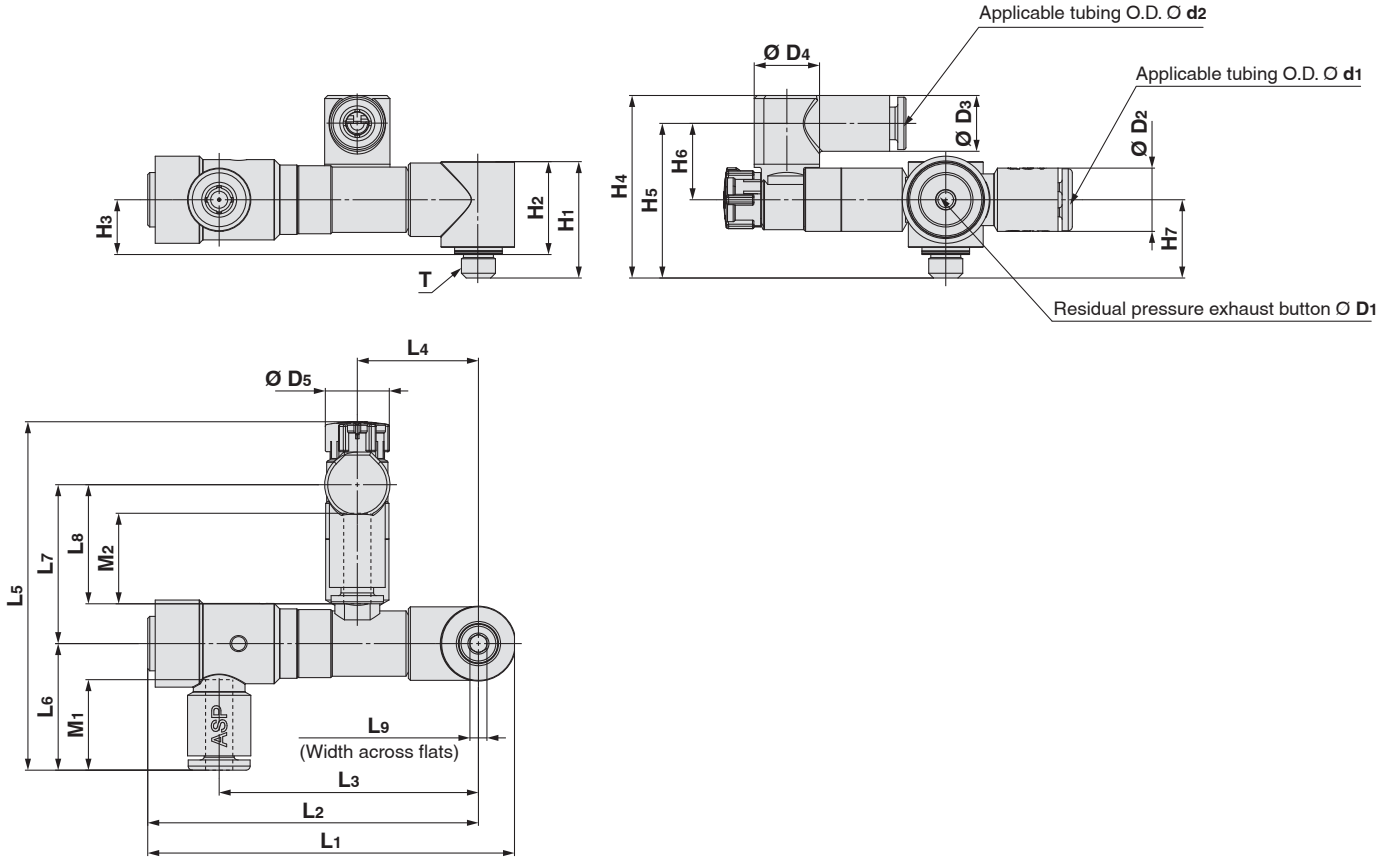

Metric Size

[mm]

Model	d1	d2	T	D1	D2	D3	D4	D5	L1	L2	L3	L4	L5	
													Unlocked	Locked
ASP-UB04E-M5	4	4	M5 x 0.8	2.9	9.3	8.2	9.6	9.4	53.9	48.6	38.1	17.8	52.3	51.2
ASP-UB04E-U10			10/32UNF		9.3	8.2	9.6	9.4	53.9	48.6	38.1	17.8	52.3	51.2
ASP-UB06E-M5		6	M5 x 0.8		9.3	10.4	9.6	9.4	53.9	48.6	38.1	17.8	52.3	51.2
ASP-UB06E-U10			10/32UNF		9.3	10.4	9.6	9.4	53.9	48.6	38.1	17.8	52.3	51.2
ASP-UB04-M5		4	M5 x 0.8	—	9.3	8.2	9.6	9.4	52.8	47.5	38.1	17.8	52.3	51.2
ASP-UB04-U10			10/32UNF		9.3	8.2	9.6	9.4	52.8	47.5	38.1	17.8	52.3	51.2
ASP-UB06-M5		6	M5 x 0.8		9.3	10.4	9.6	9.4	52.8	47.5	38.1	17.8	52.3	51.2
ASP-UB06-U10			10/32UNF		9.3	10.4	9.6	9.4	52.8	47.5	38.1	17.8	52.3	51.2

Model	L6	L7	L8	L9 (Width across flats)	H1	H2	H3	H4	H5	H6	H7	M1	M2	Weight [g]
ASP-UB04E-M5	18.6	23.3	17.5	2.5	17.1	13.7	8.1	26.8	22.7	11.2	11.5	12.7	13.3	26
ASP-UB04E-U10	18.6	23.3	17.5	2.5	17.1	13.7	8.1	26.8	22.7	11.2	11.5	12.7	13.3	25
ASP-UB06E-M5	18.6	23.3	20.2	2.5	17.1	13.7	8.1	27.9	22.7	11.2	11.5	12.7	13.3	26
ASP-UB06E-U10	18.6	23.3	20.2	2.5	17.1	13.7	8.1	27.9	22.7	11.2	11.5	12.7	13.3	26
ASP-UB04-M5	18.6	23.3	17.5	2.5	17.1	13.7	8.1	26.8	22.7	11.2	11.5	12.7	13.3	26
ASP-UB04-U10	18.6	23.3	17.5	2.5	17.1	13.7	8.1	26.8	22.7	11.2	11.5	12.7	13.3	26
ASP-UB06-M5	18.6	23.3	20.2	2.5	17.1	13.7	8.1	27.9	22.7	11.2	11.5	12.7	13.3	27
ASP-UB06-U10	18.6	23.3	20.2	2.5	17.1	13.7	8.1	27.9	22.7	11.2	11.5	12.7	13.3	27

Dimensions

Vertical | **Universal type**

Seal method: Gasket seal
For M5, 10-32UNF

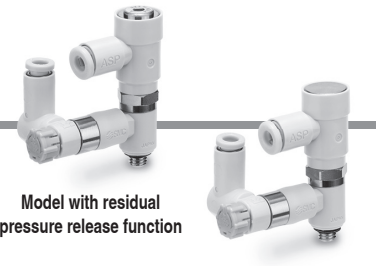

Model with residual pressure release function

Model without residual pressure release function

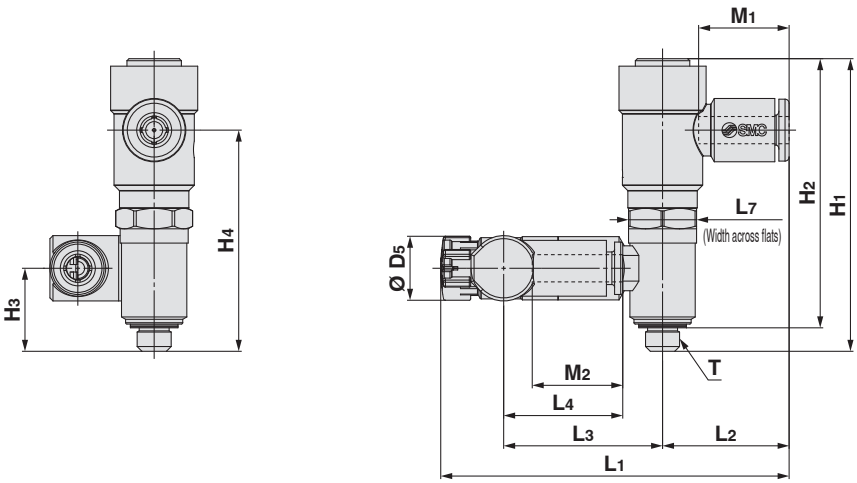

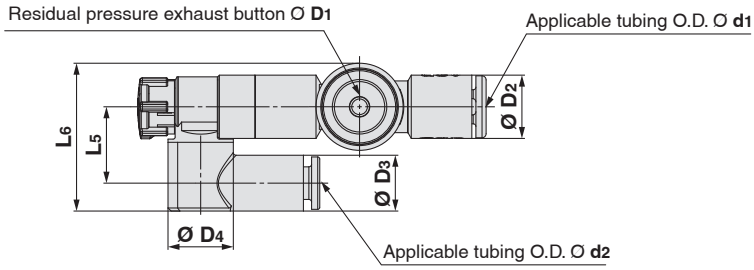

Metric Size

[mm]

Model	d1	d2	T	D1	D2	D3	D4	D5	L1 Unlocked	L1 Locked	L2	L3
ASP-UA04E-M5	4	4	M5 x 0.8	2.9	9.3	8.2	9.6	9.4	52.3	51.2	18.6	23.3
ASP-UA04E-U10			10/32UNF		9.3	8.2	9.6	9.4	52.3	51.2	18.6	23.3
ASP-UA06E-M5		6	M5 x 0.8		9.3	10.4	9.6	9.4	52.3	51.2	18.6	23.3
ASP-UA06E-U10			10/32UNF		9.3	10.4	9.6	9.4	52.3	51.2	18.6	23.4
ASP-UA04-M5		4	M5 x 0.8	—	9.3	8.2	9.6	9.4	52.3	51.2	18.6	23.3
ASP-UA04-U10			10/32UNF		9.3	8.2	9.6	9.4	52.3	51.2	18.6	23.3
ASP-UA06-M5		6	M5 x 0.8		9.3	10.4	9.6	9.4	52.3	51.2	18.6	23.3
ASP-UA06-U10			10/32UNF		9.3	10.4	9.6	9.4	52.3	51.2	18.6	23.4

Model	L4	L5	L6	L7 (Width across flats)	H1	H2	H3	H4	M1	M2	Weight [g]
ASP-UA04E-M5	17.5	11.2	21.7	10	43.0	39.6	12.2	32.5	12.7	13.3	22
ASP-UA04E-U10	17.5	11.5	21.72	10	43.0	39.6	12.2	32.5	12.7	13.3	22
ASP-UA06E-M5	20.2	11.2	22.8	10	43.0	39.6	12.2	32.5	12.7	13.3	22
ASP-UA06E-U10	20.4	11.5	22.82	10	43.0	39.6	12.2	32.5	12.7	13.3	22
ASP-UA04-M5	17.5	11.2	21.7	10	41.9	38.5	12.2	32.5	12.7	13.3	23
ASP-UA04-U10	17.5	11.5	21.72	10	41.9	38.5	12.2	32.5	12.7	13.3	23
ASP-UA06-M5	20.2	11.2	22.8	10	41.9	38.5	12.2	32.5	12.7	13.3	23
ASP-UA06-U10	20.4	11.5	22.82	10	41.9	38.5	12.2	32.5	12.7	13.3	23

Dimensions

Horizontal **Universal type**

Seal method: Sealant
For R, NPT thread



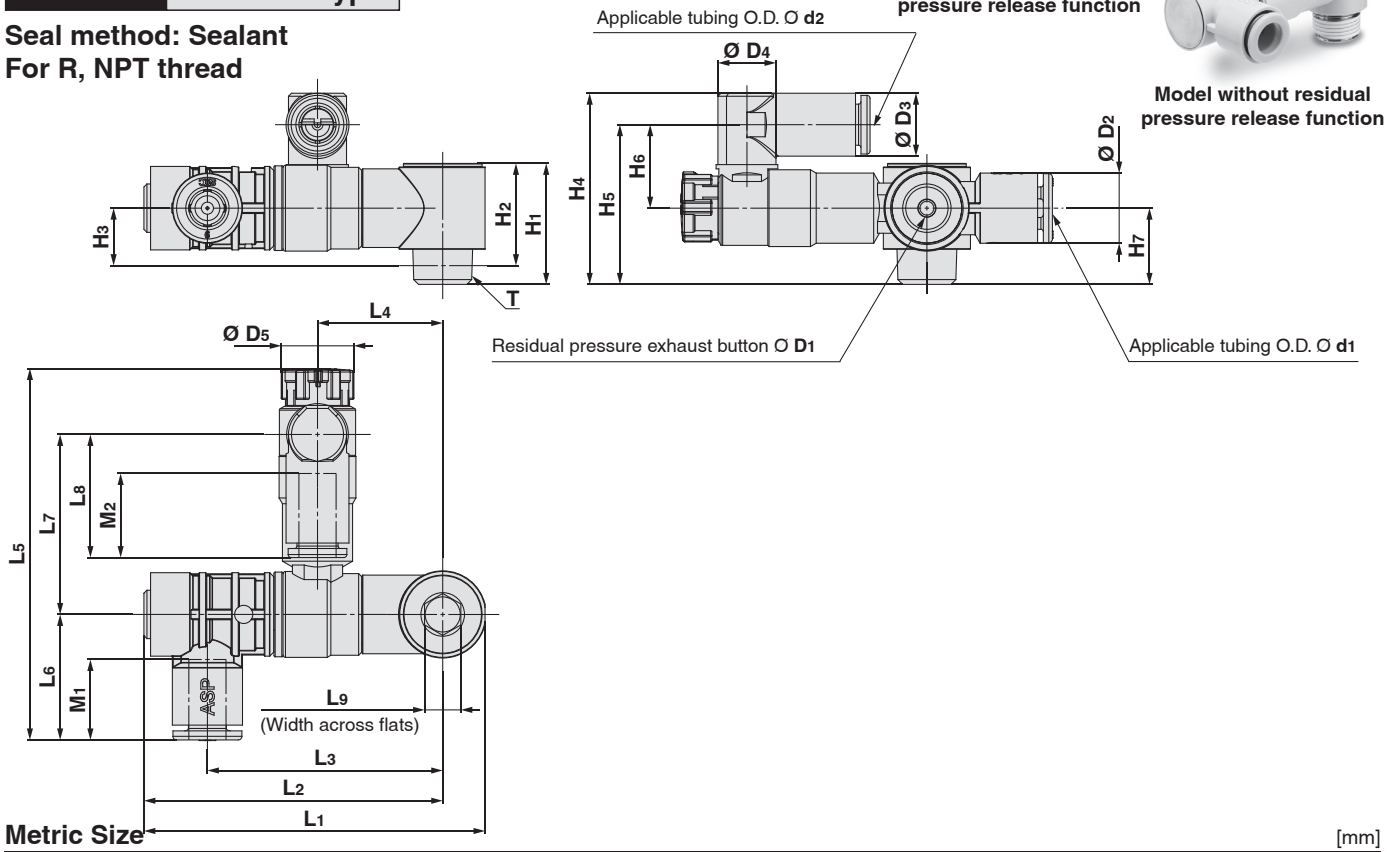

Metric Size

[mm]

Model	d1	d2	T	D1	D2	D3	D4	D5	L1	L2	L3	L4	L5	
													Unlocked	Locked
ASP-UB06E-01(S)	6	6	R1/8	2.9	11.6	10.4	9.6	12	56.4	49.4	38.9	20.7	63.0	61.6
ASP-UB08E-02(S)	8	8	R1/4		15.2	13.2	12.9	13	65.5	56.8	46.7	26.8	79.3	77.7
ASP-UB10E-03(S)	10	10	R3/8		18.5	15.9	17.4	16.6	77.6	67.1	56.5	33.0	91.3	89.7
ASP-UB12E-04(S)	12	12	R1/2		21.7	18.5	21.0	18.8	93.6	80.8	69.4	38.6	106.5	104.9
ASP-UB06-01(S)	6	6	R1/8	—	11.6	10.4	9.6	12	55.3	48.3	38.9	20.7	63.0	61.6
ASP-UB08-02(S)	8	8	R1/4		15.2	13.2	12.9	13	64.6	55.9	46.7	26.8	79.3	77.7
ASP-UB10-03(S)	10	10	R3/8		18.5	15.9	17.4	16.6	76.6	66.1	56.5	33.0	91.3	89.7
ASP-UB12-04(S)	12	12	R1/2		21.7	18.5	21.0	18.8	92.6	79.8	69.4	38.6	106.5	104.9
ASP-UB06E-N01(S)	6	6	NPT1/8	2.9	11.6	10.4	9.6	12	56.4	49.4	38.9	20.7	63.0	61.6
ASP-UB08E-N02(S)	8	8	NPT1/4		15.2	13.2	12.9	13	65.5	56.8	46.7	26.8	79.3	77.7
ASP-UB10E-N03(S)	10	10	NPT3/8		18.5	15.9	17.4	16.6	77.6	67.1	56.5	33.0	91.3	89.7
ASP-UB12E-N04(S)	12	12	NPT1/2		21.7	18.5	21.0	18.8	93.6	80.8	69.4	38.6	106.5	104.9
ASP-UB06-N01(S)	6	6	NPT1/8	—	11.6	10.4	9.6	12	55.3	48.3	38.9	20.7	63.0	61.6
ASP-UB08-N02(S)	8	8	NPT1/4		15.2	13.2	12.9	13	64.6	55.9	46.7	26.8	79.3	77.7
ASP-UB10-N03(S)	10	10	NPT3/8		18.5	15.9	17.4	16.6	76.6	66.1	56.5	33.0	91.3	89.7
ASP-UB12-N04(S)	12	12	NPT1/2		21.7	18.5	21.0	18.8	93.6	80.8	69.4	38.6	106.5	104.9

Model	L6	L7	L8	L9 (Width across flats)	H1	H2	H3	H4	H5	H6	H7	M1	M2	Weight [g]
ASP-UB06E-01(S)	20.8	29.8	20.4	6	20.0	16.9	9.5	31.6	26.4	13.8	12.6	13.9	13.3	44
ASP-UB08E-02(S)	27.2	37.9	23.5	8	30.0	25.3	14.8	45.0	38.4	18.9	19.5	18.7	14.2	95
ASP-UB10E-03(S)	31.9	45.6	26.1	10	37.7	32.6	18.6	54.6	46.6	22.9	23.7	21.0	15.6	162
ASP-UB12E-04(S)	35.3	55.3	28.3	10	45.2	38.8	22.8	64.6	55.3	26.1	29.2	22.0	17.0	292
ASP-UB06-01(S)	20.8	29.8	20.4	6	20.0	16.9	9.5	31.6	26.4	13.8	12.6	13.9	13.3	45
ASP-UB08-02(S)	27.2	37.9	23.5	8	30.0	25.3	14.8	45.0	38.4	18.9	19.5	18.7	14.2	96
ASP-UB10-03(S)	31.9	45.6	26.1	10	37.7	32.6	18.6	54.6	46.6	22.9	23.7	21.0	15.6	163
ASP-UB12-04(S)	35.3	55.3	28.3	10	45.2	38.8	22.8	64.6	55.3	26.1	29.2	22.0	17.0	293
ASP-UB06E-N01(S)	20.8	29.8	20.4	5.56	20.0	16.8	9.4	31.6	26.4	13.8	12.6	13.9	13.3	45
ASP-UB08E-N02(S)	27.2	37.9	23.5	7.938	30.3	25.9	16.4	46.3	39.7	18.9	20.8	18.7	14.2	96
ASP-UB10E-N03(S)	31.9	45.6	26.1	9.525	37.4	32.7	20.2	55.8	47.8	22.9	24.9	21.0	15.6	163
ASP-UB12E-N04(S)	35.3	55.3	28.3	9.525	44.6	38.2	23.7	65.5	56.2	26.1	30.1	22.0	17.0	291
ASP-UB06-N01(S)	20.8	29.8	20.4	5.56	20.0	16.8	9.4	31.6	26.4	13.8	12.6	13.9	13.3	45
ASP-UB08-N02(S)	27.2	37.9	23.5	7.938	30.3	25.9	16.4	46.3	39.7	18.9	20.8	18.7	14.2	97
ASP-UB10-N03(S)	31.9	45.6	26.1	9.525	37.4	32.7	20.2	55.8	47.8	22.9	24.9	21.0	15.6	163
ASP-UB12-N04(S)	35.3	55.3	28.3	9.525	44.6	38.2	23.7	65.5	56.2	26.1	30.1	22.0	17.0	292

Dimensions

Vertical | **Universal type**

Seal method: Face seal
For G



Model with residual pressure release function



Model without residual pressure release function

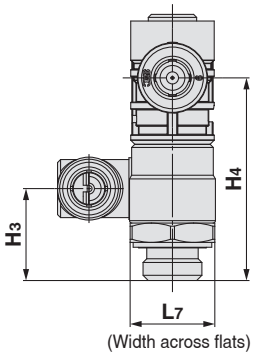

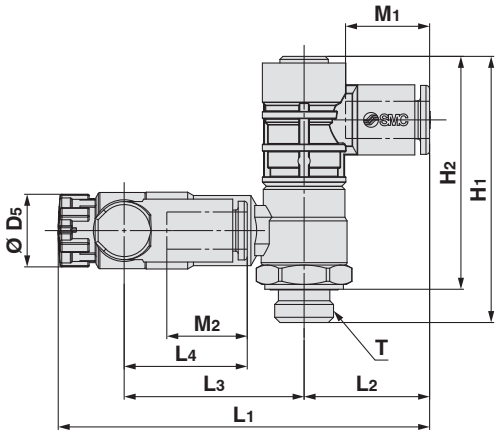

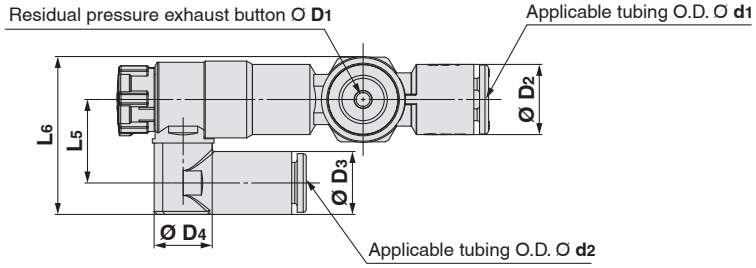

Metric Size

[mm]

Model	d1	d2	T	D1	D2	D3	D4	D5	L1		L2	L3
									Unlocked	Locked		
ASP-UA06E-G01	6	6	G1/8	2.9	11.6	10.4	9.6	12	63.0	61.6	20.8	29.8
ASP-UA08E-G02	8	8	G1/4		15.2	13.2	12.9	13	79.3	77.7	27.2	37.9
ASP-UA10E-G03	10	10	G3/8		18.5	15.9	17.4	16.6	91.3	89.7	31.9	45.6
ASP-UA12E-G04	12	12	G1/2		21.7	18.5	21	18.8	106.5	104.9	35.3	55.3
ASP-UA06-G01	6	6	G1/8	—	11.6	10.4	9.6	12	63.0	61.6	20.8	29.8
ASP-UA08-G02	8	8	G1/4		15.2	13.2	12.9	13	79.3	77.7	27.2	37.9
ASP-UA10-G03	10	10	G3/8		18.5	15.9	17.4	16.6	91.3	89.7	31.9	45.6
ASP-UA12-G04	12	12	G1/2		21.7	18.5	21	18.8	106.5	104.9	35.3	55.3

Model	L4	L5	L6	L7 (Width across flats)	H1	H2	H3	H4	M1	M2	Weight [g]
ASP-UA06E-G01	20.4	13.8	26	14	44.0	38.5	15.2	33.5	13.9	13.3	36
ASP-UA08E-G02	23.5	18.9	35	19	48.1	41.6	17.1	38	18.7	14.2	74
ASP-UA10E-G03	26.1	22.9	42.9	24	56.7	49.2	21.8	46.1	21.0	15.6	122
ASP-UA12E-G04	28.3	26.1	50.4	30	67.8	58.8	25.7	56.4	22.0	17.0	211
ASP-UA06-G01	20.4	13.8	26	14	42.9	37.4	15.2	33.5	13.9	13.3	37
ASP-UA08-G02	23.5	18.9	35	19	47.2	40.7	17.1	38	18.7	14.2	74
ASP-UA10-G03	26.1	22.9	42.9	24	55.7	48.2	21.8	46.1	21.0	15.6	123
ASP-UA12-G04	28.3	26.1	50.4	30	66.8	57.8	25.7	56.4	22.0	17.0	211

Dimensions

Horizontal **Universal type**

Seal method: Face seal
For G

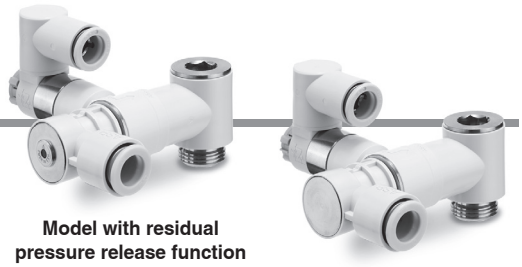

Model with residual pressure release function

Model without residual pressure release function

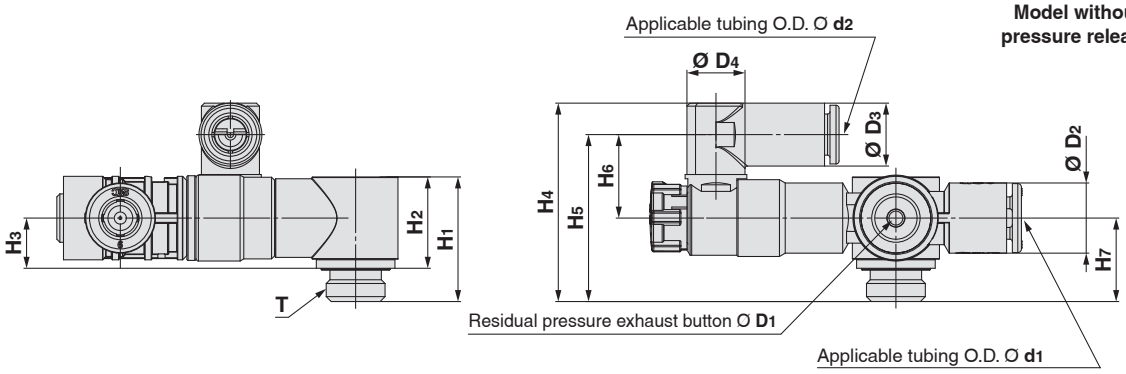

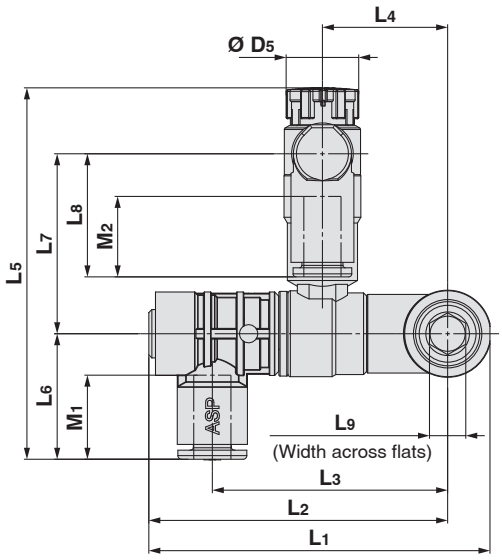

Metric Size

[mm]

Model	d1	d2	T	D1	D2	D3	D4	D5	L1	L2	L3	L4	L5	
													Unlocked	Locked
ASP-UB06E-G01	6	6	G1/8	2.9	11.6	10.4	9.6	12	56.4	49.4	38.9	20.7	63.0	61.6
ASP-UB08E-G02	8	8	G1/4		15.2	13.2	12.9	13	65.5	56.8	46.7	26.8	79.3	77.7
ASP-UB10E-G03	10	10	G3/8		18.5	15.9	17.4	16.6	77.6	67.1	56.5	33.0	91.3	89.7
ASP-UB12E-G04	12	12	G1/2		21.7	18.5	21.0	18.8	93.6	80.8	69.4	38.6	106.5	104.9
ASP-UB06-G01	6	6	G1/8	—	11.6	10.4	9.6	12	55.3	48.3	38.9	20.7	63.0	61.6
ASP-UB08-G02	8	8	G1/4		15.2	13.2	12.9	13	64.6	55.9	46.7	26.8	79.3	77.7
ASP-UB10-G03	10	10	G3/8		18.5	15.9	17.4	16.6	76.6	66.1	56.5	33.0	91.3	89.7
ASP-UB12-G04	12	12	G1/2		21.7	18.5	21.0	18.8	92.6	79.8	69.4	38.6	106.5	104.9

Model	L6	L7	L8	L9 (Width across flats)	H1	H2	H3	H4	H5	H6	H7	M1	M2	Weight [g]
ASP-UB06E-G01	20.8	29.8	20.4	6	20.6	15.1	8.3	32.8	27.6	13.8	13.8	13.9	13.3	44
ASP-UB08E-G02	27.2	37.9	23.5	8	27.8	21.3	11.8	43.8	37.2	18.9	18.3	18.7	14.2	93
ASP-UB10E-G03	31.9	45.6	26.1	10	34.8	27.3	14.8	53.2	45.2	22.9	22.3	21.0	15.6	157
ASP-UB12E-G04	35.3	55.3	28.3	10	41.0	32.0	17.5	61.9	52.6	26.1	26.5	22.0	17.0	26
ASP-UB06-G01	20.8	29.8	20.4	6	20.6	15.1	8.3	32.8	27.6	13.8	13.8	13.9	13.3	45
ASP-UB08-G02	27.2	37.9	23.5	8	27.8	21.3	11.8	43.8	37.2	18.9	18.3	18.7	14.2	94
ASP-UB10-G03	31.9	45.6	26.1	10	34.8	27.3	14.8	53.2	45.2	22.9	22.3	21.0	15.6	158
ASP-UB12-G04	35.3	55.3	28.3	10	41.0	32.0	17.5	61.9	52.6	26.1	26.5	22.0	17.0	283

ASP Series
Specific Product Precautions 1

Be sure to read this before handling the products. Refer to the back cover for safety instructions. For flow control equipment precautions, refer to the "Handling Precautions for SMC Products" and the "Operation Manual" on the SMC website: https://www.smc.eu

Design

⚠ Warning

1. Confirm the specifications.

The products in this catalog are designed to be used in compressed air systems (including vacuum) only.

Do not operate at pressures, temperatures, etc., beyond the range of specifications, as this can cause damage or malfunction. (Refer to the specifications.)

Please contact SMC when using a fluid other than compressed air (including vacuum).

We do not guarantee against any damage if the product is used outside of the specification range.

2. Do not disassemble the product or make any modifications, including additional machining.

Doing so may cause human injury and/or an accident.

3. Sonic conductance (C) and critical pressure ratio (b) values for products are representative values.

4. Check if PTFE can be used in the application.

PTFE powder (Polytetrafluoroethylene resin) is included in the seal material of the male thread type piping taper thread.

Confirm that the use of it will not cause any adverse effects on the system.

Please contact SMC if the Safety Data Sheet (SDS) is required.

5. The pilot check valve is a product aimed at the control of the actuator via a temporary intermediate stop.

The pilot check valve is used for temporarily stopping the actuator. Until a pilot signal is input, the valve shuts off the flow path from 2 to 1 and the actuator stops. When a pilot signal is input, the flow path from 2 to 1 is opened. When the residual pressure exhaust button is operated, all flow paths (2 to 1, 21, and exhaust port) are opened.

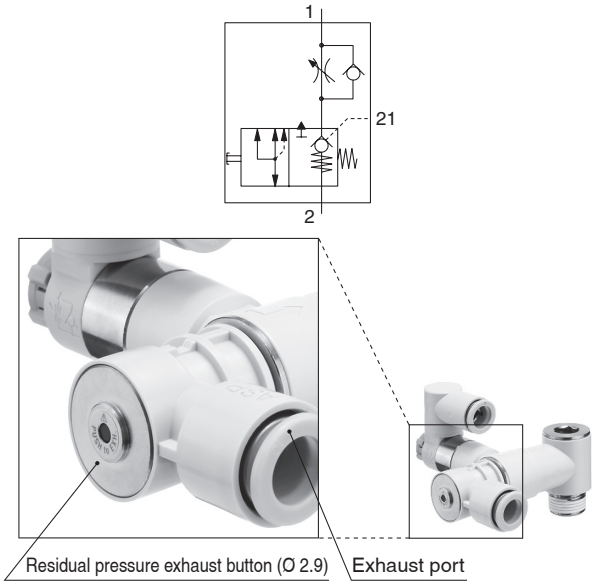

6. This product cannot be used for accurate and precise intermediate stops of the actuator.

Due to the compressibility of air as a fluid, the actuator will continue to move until it reaches a position of pressure balance, even though the pilot check valve closes with an intermediate stop signal.

7. This product cannot be used to hold a stop position for an extended period of time.

Pilot check valves and actuators are not guaranteed for zero air leakage. Therefore, it is sometimes not possible to hold a stop position for an extended period of time. In the event that holding for an extended time is necessary, a mechanical means for holding should be devised.

8. Pay attention to the residual pressure within the actuator at the time of intermediate stop.

When the actuator is stopped at the intermediate position by this product, there may be pressure contained inside the actuator, therefore the actuator may suddenly move when the residual pressure is released. Before operating the residual pressure exhaust button, confirm that the surrounding area is secure from any potential hazards or accidents occurring.

9. Use this product after checking the surrounding areas in advance before the release of residual pressure.

The actuator may move at a speed quicker than the intended speed from the original circuit set up when exhausting from the residual pressure release. Confirm this speed will not create additional hazards and pay attention to the air discharged from the exhaust port.

10. Pay attention to the motion of the actuator at the time of release of the residual pressure.

When operating the residual pressure exhaust button or conducting maintenance or inspection, the actuator may start moving due to the residual pressure. Take appropriate measures in advance to prevent an actuator movement from posing a hazard.

Also pay attention to the operation speed and the movement of the cylinder during exhaust.

When an exhaust center valve is used on the actuator supply side (Figure A below), the residual pressure is released from port 1, 21, and the exhaust port. However, when using a closed center valve like the example shown in Figure B below, air is discharged only from port 21 and the exhaust port.

For the moving direction of the actuator against the corresponding exhaust side, refer to the figure below.

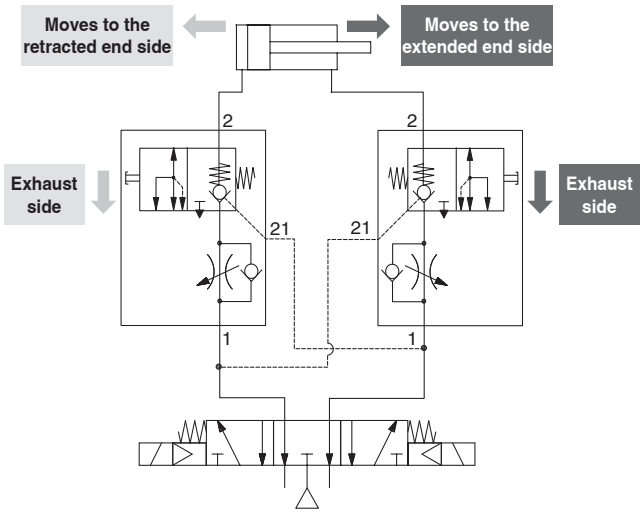

Figure A: Example of piping using exhaust center valve

* Use the model "ASP-□-M5" or "ASP-□-U10" in a circuit that uses an exhaust center valve.

ASP Series
Specific Product Precautions 2

Be sure to read this before handling the products. Refer to the back cover for safety instructions. For flow control equipment precautions, refer to the "Handling Precautions for SMC Products" and the "Operation Manual" on the SMC website: https://www.smc.eu

Design

⚠ Warning

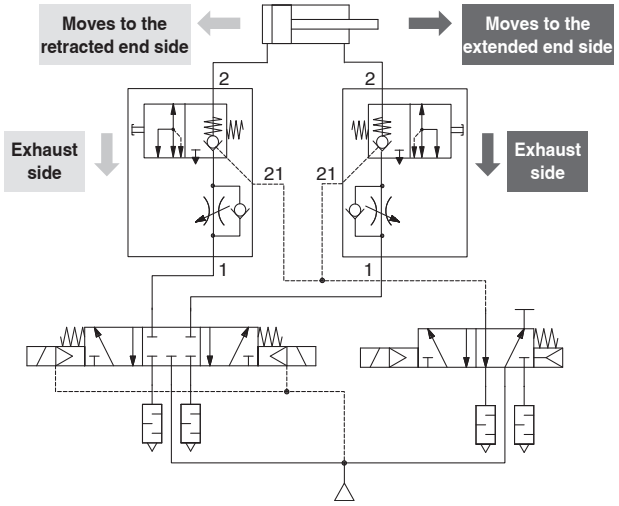

Figure B: Example of piping using closed center valve (Recommended example)

∗ The model "ASP-□-M5" or "ASP-□-U10" cannot be used in a circuit that uses a closed center valve only. If you want to use that model with a closed center valve only, contact us.

11. Push the residual pressure exhaust button all the way to the end position by using a tool.

Push the residual pressure exhaust button all the way to the end position by using a tool having a tip diameter of Ø2.8 or below. Refer to the table below for operating force and depth. Note that the higher the residual pressure, the greater the force required to operate the residual pressure exhaust button.

Model	Operating force [N] (Reference value)	Operating depth [mm]
ASP-□-M5/U10	5.3 to 8.2	3.5
ASP-□-□01	5.1 to 11.9	3.9
ASP-□-□02	6.7 to 19.5	3.8
ASP-□-□03	10.6 to 34.4	4.7
ASP-□-□04	17.1 to 54.4	5.8

12. After operating the residual pressure exhaust button, confirm that the button has returned to the normal position.

Make sure that the residual pressure exhaust button has returned to the end face of the product before operating again. If the button cannot return to the normal position, the intermediate stop function of the actuator will not work. Therefore, replace the product with a new one.

13. Pay attention to the motion of the actuator at the time of restart after the release of residual pressure.

When restarting the product after releasing the residual pressure, check the initial driving direction, confirm that the work area is secured, and then restart the product. Failure to follow this instruction may cause the actuator to suddenly move.

14. When the product is used in a balance control circuit, the check valve may not be released even when the pilot pressure is 50% of the operating pressure. In this case, obtain the pilot pressure from a position so that the pilot pressure is equivalent to the operating pressure.
When using the product at the minimum operating pressure, set the pilot pressure to 0.1 MPa or higher. However, for "ASP-□-M5" or "ASP-□-U10," set the pilot pressure to 0.15 MPa or higher.

15. As a reference, we have confirmed through our durability tests that the check valve has a durability against 10 million cycles of ON and OFF operations and the residual pressure exhaust button has a durability against 10,000 cycles of operation at the maximum operating pressure.
However, note that the tests were conducted under limited conditions.

16. In the following cases, malfunctioning or noise due to oscillation may occur.

- When the differential pressure between the port 1 side and port 2 side is smaller than the min. operating pressure
- When the IN side piping of the product or the effective area of the directional control valve is smaller than that of the product
- When the pressure drop on the port 1 side is slower than that of the port 2 side during operation of the product
- When the supply pressure at the port 21 is reduced (Refer to the piping diagram below.)
- When the port 1 side piping (tube) is bent or crushed

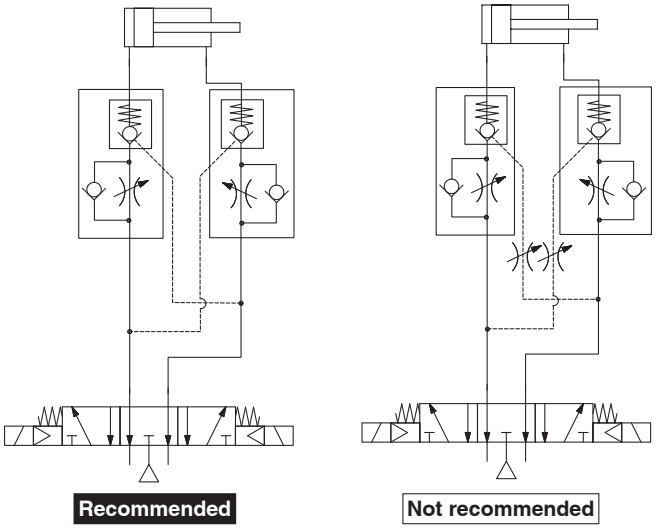

ASP Series
Specific Product Precautions 3

Be sure to read this before handling the products. Refer to the back cover for safety instructions. For flow control equipment precautions, refer to the "Handling Precautions for SMC Products" and the "Operation Manual" on the SMC website: https://www.smc.eu

Mounting

⚠ Warning

1. Operation manual

Install the product and operate it only after reading the operation manual carefully and understanding its contents. Also, keep the manual where it can be referred to as necessary.

2. Ensure sufficient space for maintenance activities.

When installing the products, allow access for maintenance and inspection.

3. Tighten threads with the proper tightening torque.

When installing the products, follow the listed torque specifications.

4. Screw the R screw into the Rc thread, the NPT screw into the NPT thread and the G screw into the G thread.

5. Mount after confirming the piping direction.

Connect the IN side to the directional control valve and OUT side to the actuator.

6. Do not apply excessive force or shock to the fittings or other parts of the product with tools.

Doing so may result in damage or air leakage. When connecting piping, use a tube of sufficient length. When binding the piping together with a tying band, etc., be sure that external force is not being applied to the piping.

7. For handling One-touch fittings, refer to the "Fittings and Tubing Precautions" in the "Handling Precautions for SMC Products."

8. Pay attention to the method of mounting on the cylinder.

For the horizontal type, a hexagon wrench needs to be used. The product cannot be mounted with an open-end wrench. For the mounting of the vertical type, an open-end wrench needs to be used. Note that the mounting method differs between the vertical type and horizontal type.

9. Conduct mounting and removal of the vertical type by holding the width across flats of the body B and turning it by using an appropriate wrench.

Do not apply torque at other points, as the product may be damaged. Rotate body A manually for positioning after installation.

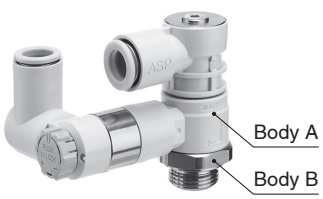

10. To install and remove the horizontal type product with hexagonal hole, use an appropriate hex key and push it into the hexagon hole of the stud.

Do not apply torque at other points, as the product may be damaged. Rotate the end body manually for positioning after installation. Refer to the applicable dimension of the hexagon wrench.

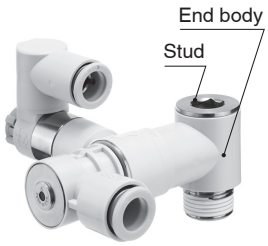

Connection thread size	Hexagon wrench (Nominal width across flats)	
	Metric size	Inch size
M5, 10-32UNF	2.5	—
R1/8, G1/8	6	—
NPT1/8	—	7/32"
R1/4, G1/4	8	—
NPT1/4	—	5/16"
R3/8, G3/8	10	—
NPT3/8	—	3/8"
R1/2, G1/2	12	—
NPT1/2	—	3/8"

11. Do not use this product in the operating condition where moment loads will be constantly applied to the product.

The fitting section and the product may be damaged.

⚠ Safety Instructions

These safety instructions are intended to prevent hazardous situations and/or equipment damage. These instructions indicate the level of potential hazard with the labels of **"Caution," "Warning"** or **"Danger."** They are all important notes for safety and must be followed in addition to International Standards (ISO/IEC) [1], and other safety regulations.

⚠ **Caution:**	**Caution** indicates a hazard with a low level of risk which, if not avoided, could result in minor or moderate injury.
⚠ **Warning:**	**Warning** indicates a hazard with a medium level of risk which, if not avoided, could result in death or serious injury.
⚠ **Danger:**	**Danger** indicates a hazard with a high level of risk which, if not avoided, will result in death or serious injury.

1) ISO 4414: Pneumatic fluid power – General rules relating to systems.
ISO 4413: Hydraulic fluid power – General rules relating to systems.
IEC 60204-1: Safety of machinery – Electrical equipment of machines. (Part 1: General requirements)
ISO 10218-1: Manipulating industrial robots - Safety.
etc.

⚠ Warning

1. The compatibility of the product is the responsibility of the person who designs the equipment or decides its specifications.
Since the product specified here is used under various operating conditions, its compatibility with specific equipment must be decided by the person who designs the equipment or decides its specifications based on necessary analysis and test results. The expected performance and safety assurance of the equipment will be the responsibility of the person who has determined its compatibility with the product. This person should also continuously review all specifications of the product referring to its latest catalogue information, with a view to giving due consideration to any possibility of equipment failure when configuring the equipment.

2. Only personnel with appropriate training should operate machinery and equipment.
The product specified here may become unsafe if handled incorrectly. The assembly, operation and maintenance of machines or equipment including our products must be performed by an operator who is appropriately trained and experienced.

3. Do not service or attempt to remove product and machinery/ equipment until safety is confirmed.
1. The inspection and maintenance of machinery/equipment should only be performed after measures to prevent falling or runaway of the driven objects have been confirmed.
2. When the product is to be removed, confirm that the safety measures as mentioned above are implemented and the power from any appropriate source is cut, and read and understand the specific product precautions of all relevant products carefully.
3. Before machinery/equipment is restarted, take measures to prevent unexpected operation and malfunction.

4. Contact SMC beforehand and take special consideration of safety measures if the product is to be used in any of the following conditions.
1. Conditions and environments outside of the given specifications, or use outdoors or in a place exposed to direct sunlight.
2. Installation on equipment in conjunction with atomic energy, railways, air navigation, space, shipping, vehicles, military, medical treatment, combustion and recreation, or equipment in contact with food and beverages, emergency stop circuits, clutch and brake circuits in press applications, safety equipment or other applications unsuitable for the standard specifications described in the product catalogue.
3. An application which could have negative effects on people, property, or animals requiring special safety analysis.
4. Use in an interlock circuit, which requires the provision of double interlock for possible failure by using a mechanical protective function, and periodical checks to confirm proper operation.

⚠ Caution

1. The product is provided for use in manufacturing industries.
The product herein described is basically provided for peaceful use in manufacturing industries.
If considering using the product in other industries, consult SMC beforehand and exchange specifications or a contract if necessary.
If anything is unclear, contact your nearest sales branch.

Limited warranty and Disclaimer/Compliance Requirements

The product used is subject to the following "Limited warranty and Disclaimer" and "Compliance Requirements".Read and accept them before using the product.

Limited warranty and Disclaimer

1. The warranty period of the product is 1 year in service or 1.5 years after the product is delivered, whichever is first. [2] Also, the product may have specified durability, running distance or replacement parts. Please consult your nearest sales branch.
2. For any failure or damage reported within the warranty period which is clearly our responsibility, a replacement product or necessary parts will be provided. This limited warranty applies only to our product independently, and not to any other damage incurred due to the failure of the product.
3. Prior to using SMC products, please read and understand the warranty terms and disclaimers noted in the specified catalogue for the particular products.

2) Vacuum pads are excluded from this 1 year warranty.
A vacuum pad is a consumable part, so it is warranted for a year after it is delivered. Also, even within the warranty period, the wear of a product due to the use of the vacuum pad or failure due to the deterioration of rubber material are not covered by the limited warranty.

Compliance Requirements

1. The use of SMC products with production equipment for the manufacture of weapons of mass destruction (WMD) or any other weapon is strictly prohibited.
2. The exports of SMC products or technology from one country to another are governed by the relevant security laws and regulations of the countries involved in the transaction. Prior to the shipment of a SMC product to another country, assure that all local rules governing that export are known and followed.

⚠ Caution

SMC products are not intended for use as instruments for legal metrology.
Measurement instruments that SMC manufactures or sells have not been qualified by type approval tests relevant to the metrology (measurement) laws of each country.
Therefore, SMC products cannot be used for business or certification ordained by the metrology (measurement) laws of each country.

SMC Corporation (Europe)

Austria	+43 (0)2262622800	www.smc.at	office@smc.at
Belgium	+32 (0)33551464	www.smc.be	info@smc.be
Bulgaria	+359 (0)2807670	www.smc.bg	office@smc.bg
Croatia	+385 (0)13707288	www.smc.hr	office@smc.hr
Czech Republic	+420 541424611	www.smc.cz	office@smc.cz
Denmark	+45 70252900	www.smcdk.com	smc@smcdk.com
Estonia	+372 651 0370	www.smcee.ee	info@smcee.ee
Finland	+358 207513513	www.smc.fi	smcfi@smc.fi
France	+33 (0)164761000	www.smc-france.fr	supportclient@smc-france.fr
Germany	+49 (0)61034020	www.smc.de	info@smc.de
Greece	+30 210 2717265	www.smchellas.gr	sales@smchellas.gr
Hungary	+36 23513000	www.smc.hu	office@smc.hu
Ireland	+353 (0)14039000	www.smcautomation.ie	sales@smcautomation.ie
Italy	+39 03990691	www.smcitalia.it	mailbox@smcitalia.it
Latvia	+371 67817700	www.smc.lv	info@smc.lv
Lithuania	+370 5 2308118	www.smclt.lt	info@smclt.lt
Netherlands	+31 (0)205318888	www.smc.nl	info@smc.nl
Norway	+47 67129020	www.smc-norge.no	post@smc-norge.no
Poland	+48 222119600	www.smc.pl	office@smc.pl
Portugal	+351 214724500	www.smc.eu	apoioclientept@smc.smces.es
Romania	+40 213205111	www.smcromania.ro	smcromania@smcromania.ro
Russia	+7 (812)3036600	www.smc.eu	sales@smcru.com
Slovakia	+421 (0)413213212	www.smc.sk	office@smc.sk
Slovenia	+386 (0)73885412	www.smc.si	office@smc.si
Spain	+34 945184100	www.smc.eu	post@smc.smces.es
Sweden	+46 (0)86031240	www.smc.nu	smc@smc.nu
Switzerland	+41 (0)523963131	www.smc.ch	info@smc.ch
Turkey	+90 212 489 0 440	www.smcturkey.com.tr	info@smcturkey.com.tr
UK	+44 (0)845 121 5122	www.smc.uk	sales@smc.uk
South Africa	+27 10 900 1233	www.smcza.co.za	zasales@smcza.co.za

Printing BT 00 Printed in Spain

Specifications are subject to change without prior notice and any obligation on the part of the manufacturer