Stainless Steel Speed Controller with One-touch Fitting

New

RoHS

Improved environmental resistance with the all stainless steel exterior

Possible for use in environments such as

high temperature, **water splashing**, **and**

where copper and zinc cannot be used

Max. operating temperature: 150 °C

NSF H1 grease

Connection thread: Supports M5, R, NPT, and G

Material: Stainless steel 316 (Body A)*1, FKM (Seal material)

*1 Stainless steel 304 is used as the material for parts other than body A.

Compact

Height reduced by 23 %

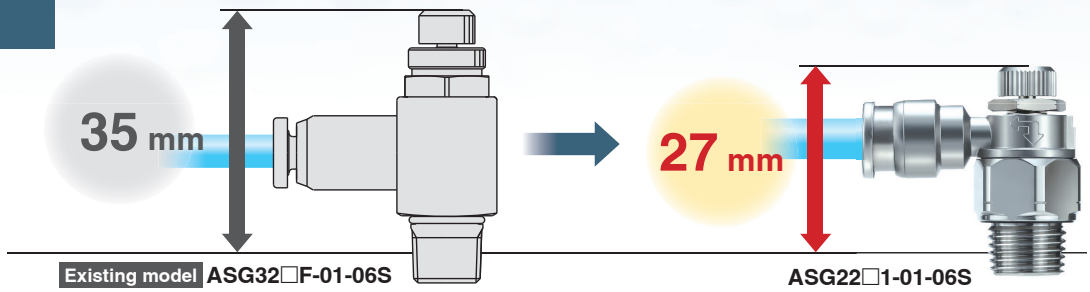

Lightweight

Existing model

42 g → Weight **21 g**

ASG32□F-01-06S → ASG22□1-01-06S

Variations

Port size		Applicable tubing O.D.	
		Metric size	Inch size
M5 x 0.8		Ø 4, Ø 6	–
10-32UNF		–	Ø 5/32", Ø 1/4"
R NPT G	1/8	Ø 6, Ø 8	Ø 1/4", Ø 5/16"
	1/4	Ø 6, Ø 8, Ø 10	Ø 1/4", Ø 5/16", Ø 3/8"
	3/8	Ø 8, Ø 10	Ø 5/16", Ø 3/8"
	1/2	Ø 10, Ø 12	Ø 3/8", Ø 1/2"

* Metric size: R, G only, Inch size: NPT only

ASG Series

SMC

CAT.EUS20-283A-UK

Stainless Steel Speed Controller with One-touch Fitting

ASG Series

RoHS

Model

One-touch fitting type

Model (Standard)	Port size		Seal method	Applicable tubing O.D.									
				Metric size (Applicable thread: R, G)					Inch size (Applicable thread: NPT)				
				4	6	8	10	12	5/32"	1/4"	5/16"	3/8"	1/2"
ASG12□1-M5-□	M5 x 0.8		Gasket seal	●	●								
ASG12□1-U10/32-□	10-32UNF								●	●			
ASG22□1-□01-□	R G NPT	1/8	Sealant (R/NPT) Face seal (G)		●	●				●	●		
ASG22□1-□02-□		1/4			●	●	●			●	●	●	
ASG32□1-□03-□		3/8				●	●				●	●	
ASG42□1-□04-□		1/2					●	●				●	●

∗1 "Without sealant" type can be selected as a standard option.
∗2 Meter-out and meter-in types can be visually differentiated by the flow direction symbol on the body.

Flow Direction Symbols on Body

	Meter-out	Meter-in
Indication symbol	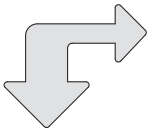	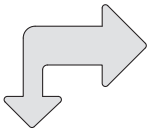
Symbol	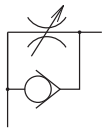	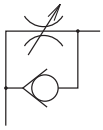

Specifications

Fluid	Air
Proof pressure	1.5 MPa
Max. operating pressure	1 MPa
Min. operating pressure	0.1 MPa
Ambient and fluid temperatures	0 to 150 °C (No freezing)
Applicable tubing material∗1	FEP, PFA, Nylon, Soft nylon, Polyurethane, Polyolefin

∗1 Check the max. operating pressure of the tubing.
(Please refer to the **Catalogue on https://www.smc.eu** for details.)

Flow Rate and Sonic Conductance

Model		ASG12□1-M5-□	ASG12□1-U10/32-□	ASG22□1-□01-□	ASG22□1-□02-□	ASG32□1-□03-□	ASG42□1-□04-□
Tubing O.D.	Metric size	Ø 4, Ø 6	—	Ø 6, Ø 8	Ø 6, Ø 8, Ø 10	Ø 8, Ø 10	Ø 10, Ø 12
	Inch size	—	Ø 5/32, Ø 1/4	Ø 1/4, Ø 5/16	Ø 1/4, Ø 5/16, Ø 3/8	Ø 5/16, Ø 3/8	Ø 3/8, Ø 1/2
C values: Sonic conductance $dm^3/(s \cdot bar)$	Free flow	0.3	0.3	0.7	1.4	2.9	5.3
	Controlled flow	0.3	0.3	0.7	1.3	3.2	5
b values: Critical pressure ratio	Free flow	0.4	0.4	0.4	0.4	0.4	0.15
	Controlled flow	0.4	0.4	0.4	0.25	0.25	0.2
Q [l/min (ANR)] ∗1	Free flow	82	82	190	381	789	1235
	Controlled flow	82	82	190	321	789	1198

∗ C and b values are for controlled flow with the needle fully open and free flow with the needle fully closed.
∗1 These values have been calculated according to ISO 6358 and indicate the flow rate under standard conditions with an inlet pressure of 0.6 MPa (relative pressure) and a pressure drop of 0.1 MPa.

How to Order

ASG 2 2 0 1 – □ 01 – 06 S

Body size

1	M5 standard
2	01, 02 standard
3	03 standard
4	04 standard

Elbow

Control type

0	Meter-out
1	Meter-in

Thread type

—	R
N	NPT
G	G

Port size

M5	M5 x 0.8
U10/32	10-32UNF
01	1/8
02	1/4
03	3/8
04	1/2

Applicable tubing O.D.

Metric size

04	Ø 4
06	Ø 6
08	Ø 8
10	Ø 10
12	Ø 12

Inch size

03	Ø 5/32"
07	Ø 1/4"
09	Ø 5/16"
11	Ø 3/8"
13	Ø 1/2"

Option

—	Without sealant
S	With sealant

∗ Select — (Without sealant) for M5 and G thread.

Needle Valve: Flow Rate Characteristics

ASG12□1-M5-□

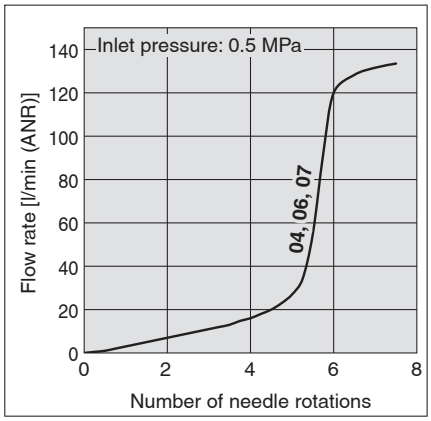

ASG22□1-01-□

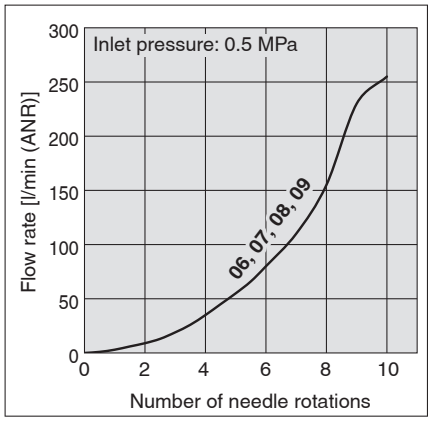

ASG22□1-02-□

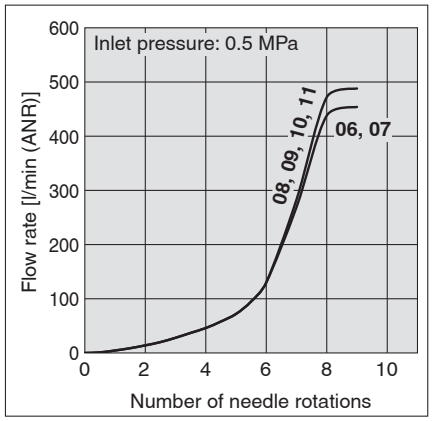

ASG32□1-03-□

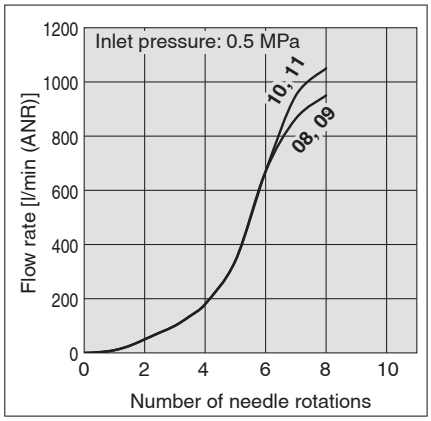

ASG42□1-04-□

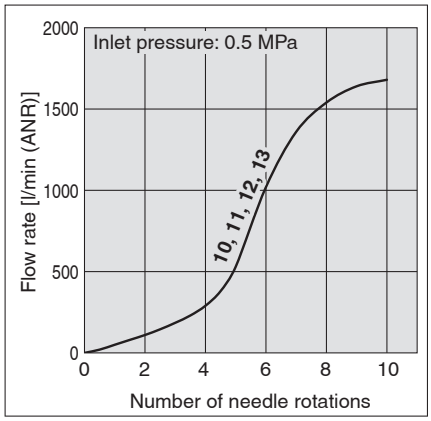

∗ The flow rate characteristics are representative values.
∗ The numbers above the flow rate characteristic curves in the charts show the applicable tubing outside diameter as defined by the product number.

Construction

Seal method: Gasket seal
For M5

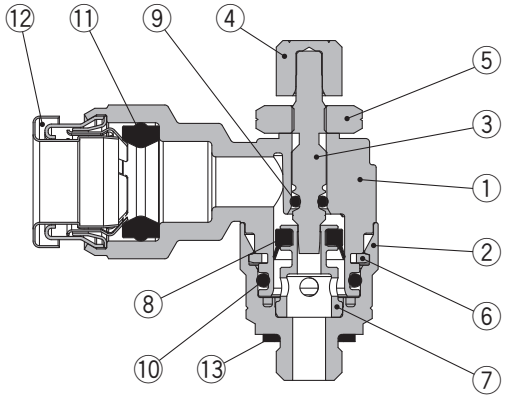

Meter-out

Seal method: Sealant
For R

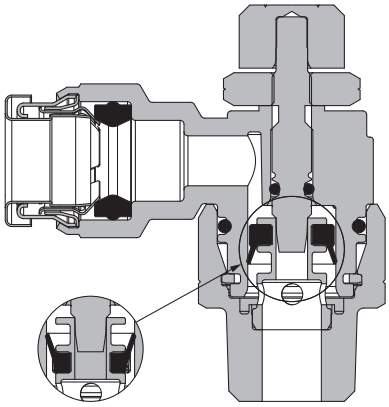

Meter-in Meter-out

Seal method: Face seal
For G thread

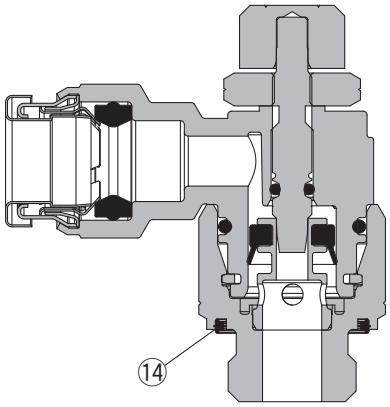

Meter-out

Component Parts

No.	Description	Material	Note
1	**Body A**	Stainless steel 316	
2	**Body B**	Stainless steel 304	
3	**Needle**	Stainless steel 304	
4	**Knob**	Stainless steel 304	
5	**Lock nut**	Stainless steel 304	
6	**C-ring**	Stainless steel 304	
7	**Seat ring**	Aluminium alloy	
8	**U-seal**	FKM	
9	**O-ring**	FKM	
10	**O-ring**	FKM	
11	**Seal**	FKM	
12	**Cassette**	Stainless steel 304	
13	**Gasket**	Stainless steel/FKM	M5
14	**Seal**	FKM	G thread type

Dimensions

One-touch fitting type
Seal method: Gasket seal
For M5, 10-32UNF

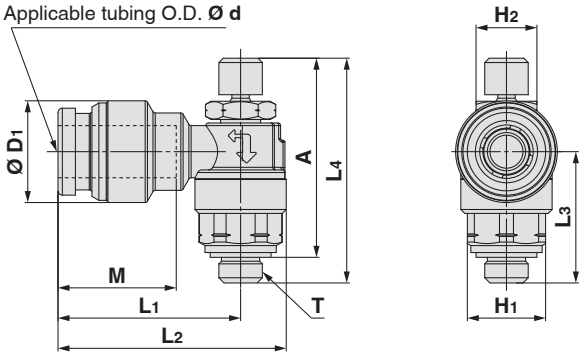

Metric Size [mm]

Model	d	T	H1	H2	D1	A Max.	L1	L2	L3	L4 Max.	M	Weight [g]
ASG12□1-M5-04	4	M5 x 0.8	9	7	9.0	26.0	16.3	21.6	15.1	28.9	12.6	9
ASG12□1-M5-06	6				11.7		21.0	26.3			13.6	12

Inch Size [mm]

Model	d	T	H1	H2	D1	A Max.	L1	L2	L3	L4 Max.	M	Weight [g]
ASG12□1-U10/32-03	5/32	10/32 UNF	9	7	9.0	26.0	16.3	21.6	15.1	28.9	12.6	9
ASG12□1-U10/32-07	1/4				11.7		21.0	26.2			13.5	12

One-touch fitting type
Seal method: Sealant
For R, NPT

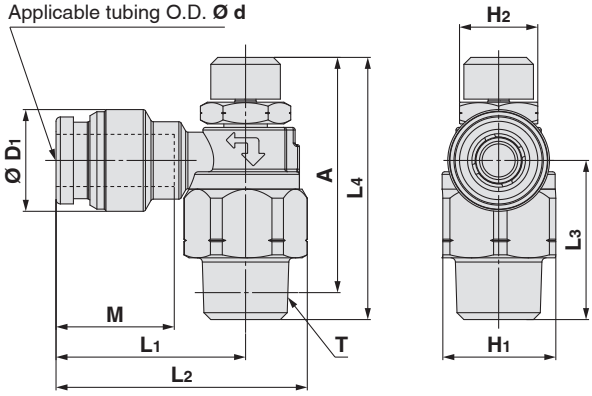

Metric Size [mm]

Model	d	T	H1	H2	D1	A Max.	L1	L2	L3	L4 Max.	M	Weight [g]
ASG22□1-01-06	6	R1/8	13	9	11.7	30.9	21.8	28.9	18.3	34	13.6	21
ASG22□1-01-08	8				13.7		24.7	31.8			16.1	23
ASG22□1-02-06	6	R1/4	17	12	11.7	34	24	33.3	23	39.5	13.6	37
ASG22□1-02-08	8				13.7		27.6	36.9			16.1	39
ASG22□1-02-10	10				16.7		30	39.2			17.0	43
ASG32□1-03-08	8	R3/8	22	14	13.7	40.3	29.2	41.1	26.9	45.5	16.1	66
ASG32□1-03-10	10				16.7		31.2	43.1			17.0	69
ASG42□1-04-10	10	R1/2	27	17	16.7	45.8	33.5	47.9	33.3	54.8	17.0	112
ASG42□1-04-12	12				19.6		35.5	49.9			18.6	117

Inch Size [mm]

Model	d	T	H1	H2	D1	A Max.	L1	L2	L3	L4 Max.	M	Weight [g]
ASG22□1-N01-07	1/4	N1/8	12.7	9	11.7	30.9	21.7	28.8	18.3	34	13.5	21
ASG22□1-N01-09	5/16				13.7		24.7	31.8			16.1	22
ASG22□1-N02-07	1/4	N1/4	17.46	12	11.7	34	23.9	33	23	39.6	13.5	37
ASG22□1-N02-09	5/16				13.7		27.6	36.9			16.1	39
ASG22□1-N02-11	3/8				16.7		29.5	38.6			16.6	44
ASG32□1-N03-09	5/16	N3/8	22.23	14	13.7	40.3	29.2	41.1	26.9	45.5	16.1	67
ASG32□1-N03-11	3/8				16.7		30.8	42.6			16.6	71
ASG42□1-N04-11	3/8	N1/2	27	17	16.7	45.8	33.1	49.2	33.3	54.8	16.6	113
ASG42□1-N04-13	1/2				19.6		35.3	49.4			18.5	116

Dimensions

One-touch fitting type
Seal method: Face seal
For G thread

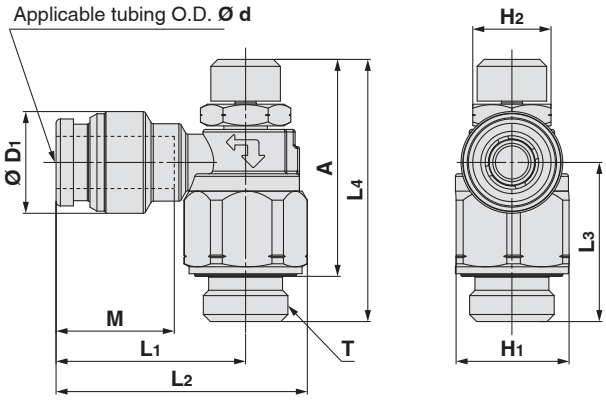

Metric Size

[mm]

Model	d	T	H1	H2	D1	A Max.	L1	L2	L3	L4 Max.	M	Weight [g]
ASG22□1-G01-06	6	G1/8	13	9	11.7	28.8	21.8	28.9	18.3	34	13.6	22
ASG22□1-G01-08	8				13.7		24.7	31.7			16.1	23
ASG22□1-G02-06	6	G1/4	17	12	11.7	31.6	24	33.2	23	39.6	13.6	38
ASG22□1-G02-08	8				13.7		27.6	36.8			16.1	40
ASG22□1-G02-10	10				16.7		29.9	39.1			17.0	44
ASG32□1-G03-08	8	G3/8	22	14	13.7	38	29.2	41	26.9	45.5	16.1	69
ASG32□1-G03-10	10				16.6		31.2	43			17.0	72
ASG42□1-G04-10	10	G1/2	27	17	16.6	45.8	33.5	47.6	33.3	54.8	17.0	119
ASG42□1-G04-12	12				19.6		35.5	49.6			18.6	124

ASG Series
Specific Product Precautions 1

Be sure to read this before handling the products. Refer to the back cover for safety instructions. For flow control equipment precautions, refer to the "Handling Precautions for SMC Products" and the "Operation Manual" on the SMC website: https://www.smc.eu

Design and Selection

⚠ Warning

1. Confirm the specifications.
The products in this catalogue are designed to be used in compressed air systems (including vacuum) only.
If the products are used in an environment where pressure or temperature is out of the specified range, damage and/or malfunction may result. Do not use under such conditions. (Refer to the specifications.)
Please contact SMC when using a fluid other than compressed air (including vacuum).
We do not guarantee against any damage if the product is used outside of the specification range.

2. Products mentioned in this catalogue are not designed for use as stop valves with zero air leakage.
A certain amount of leakage is allowed in the product's specifications.
Tightening the needle to reduce leakage to zero may result in equipment damage.

3. Do not disassemble the product or make any modifications, including additional machining.
Doing so may cause human injury and/or an accident.

4. The flow rate characteristics for each product are representative values.
The flow rate characteristics are characteristics of each individual product. Actual values may differ depending on the piping, circuitry, pressure conditions, etc.
Also, depending on product specifications, there may be variations in the zero needle rotations position of the flow rate characteristics.

5. Sonic conductance (C) and critical pressure ratio (b) values for products are representative values.
For controlled flow direction values the needle is fully open. For free flow direction values the needle is fully closed.

6. Check if PTFE can be used in the application.
PTFE powder (Polytetrafluoroethylene resin) is included in the seal material of the male thread type piping taper thread. Confirm that the use of it will not cause any adverse effects on the system.
Please contact SMC if the Safety Data Sheet (SDS) is required.

7. Speed controllers are designed to control the speed of the actuator.

Mounting

⚠ Warning

1. Operation manual
Install the product and operate it only after reading the operation manual carefully and understanding its contents.
Also, keep the manual where it can be referred to as necessary.

2. Ensure sufficient space for maintenance activities.
When installing the products, allow access for maintenance and inspection.

3. Tighten threads with the proper tightening torque.
When installing the products, follow the listed torque specifications.

4. Use R external threads with Rc internal threads.

5. Confirm that the lock nut is tightened.
A loose lock nut may cause speed changes in the actuator.

6. Check the degree of rotation of the needle valve.
The products in this catalogue are retainer type so that the needle is not removed completely. Over rotation will cause damage.

Mounting

⚠ Warning

7. Do not use tools, such as pliers, to rotate the knob.
This can cause the idle rotation of the knob or damage.

8. Confirm the air flow direction.
Mounting backward is dangerous because the speed adjustment needle will not work, and the actuator may lurch suddenly.

9. Adjust the speed by opening the needle slowly from the fully closed state.
Loose needle valves may cause unexpected sudden actuator extension.
When a needle valve is turned clockwise, it is closed and cylinder speed decreases. When a needle valve is turned counterclockwise, it is open and cylinder speed increases.

Flow Direction Symbols on Body

	Meter-out	Meter-in
Indication symbol	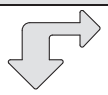	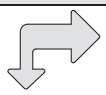
Symbol	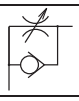	

10. Do not apply excessive force or shock to the body or fittings with an impact tool.
It can cause damage or air leakage.

11. To install/remove the product, use an appropriate wrench to tighten/loosen at the supplied nut on body B.
Do not apply torque at other points, as the product may be damaged.
Rotate body A manually for positioning after installation.

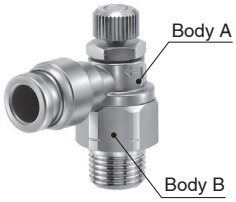

⚠ Caution

1. When performing the piping work, turn the tightening tool in the horizontal direction to the hexagon across flats of body B so that any moment is not applied to the body.
If the tool is in contact with the body, this may cause the body to come off.

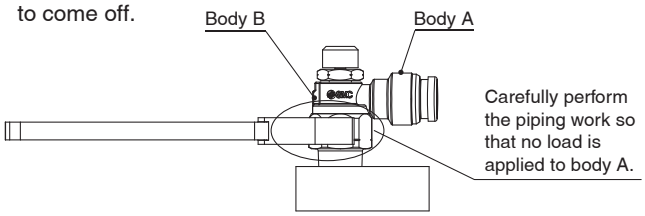

2. Body A can be slightly rotated for positioning, but it cannot be used as a rotating part.
This will cause metal debris by wearing, which may enter the operating fluid or cause fitting damage.

3. If the connection tube oscillates or turns, do not use this product.
Failure to do so may result in fitting breakage or detachment of the body.

ASG Series
Specific Product Precautions 2

Be sure to read this before handling the products. Refer to the back cover for safety instructions. For flow control equipment precautions, refer to the "Handling Precautions for SMC Products" and the "Operation Manual" on the SMC website: https://www.smc.eu

Mounting

⚠ Caution

For M5

Tightening method

First, tighten it by hand, then give it an additional 1/6 turn to 1/4 turn with a wrench. The reference value for the tightening torque is 1 to 1.5 N·m.

∗ Excessive tightening may damage the thread portion or deform the gasket and cause air leakage.
If the screw is too shallowly screwed in, it may come loose or air may leak.

Chamfered area for female thread

1. In compliance with ISO 16030 Standards (air pressure fluid dynamics – connection – ports and stud ends), the chamfered thread sizes shown below are recommended.

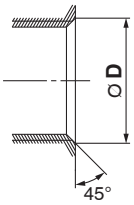

Female thread size	Chamfer dimension Ø **D** (Recommended value)
M5	5.1 to 5.4
10-32UNF	5.0 to 5.3

For R Thread (With sealant)

Tightening method

1. The proper tightening torques of the fittings are as shown in the table below.
As a guide, tighten it by hand, then turn it two or three turns with a wrench.
Check the dimensions of each product for the hexagon width across flats.

Connection thread size	Proper tightening torque [N·m]
NPT, R1/8	3 to 5
NPT, R1/4	8 to 12
NPT, R3/8	15 to 20
NPT, R1/2	20 to 25

Chamfered area for female thread

By chamfering as shown in the following table, machining of threads is easier and effective for burr prevention.

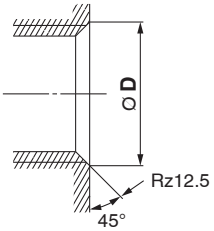

Connection thread size	Chamfer dimension Ø **D** (Recommended value)	
	Rc	NPT, NPTF
1/8	10.2 to 10.4	10.5 to 10.7
1/4	13.6 to 13.8	14.1 to 14.3
3/8	17.1 to 17.3	17.4 to 17.6
1/2	21.4 to 21.6	21.7 to 21.9

∗ For Uni thread, Rz 12.5 is necessary for sealing at the chamfered part.

For G Thread (Face seal)

Tightening method

First, tighten the threaded portion by hand, then use a proper wrench, which could be suitable for the width across flats of the hexagon body, to tighten it further at a wrench tightening angle shown in the table below. For a tightening torque guide, refer to the table below. Check the dimensions of each product for the hexagon width across flats.

1) The proper tightening torques of the fittings are as shown in the table below.

Connection thread size	Proper tightening torque [N·m]
G1/8	3 to 5
G1/4	8 to 12
G3/8	15 to 20
G1/2	20 to 25

2) Insufficient tightening may loosen the threads, or cause air leakage.
3) Reuse
   (1) Normally, fittings with a sealant can be reused up to 6 to 10 times.
   (2) The seal ring cannot be replaced.

Chamfered area for female thread (Recommended value)

1. Conforming to ISO 16030-2001, the chamfered dimensions shown in the table below are recommended. By chamfering as shown in the table below, machining of threads is easier and effective for burr prevention.

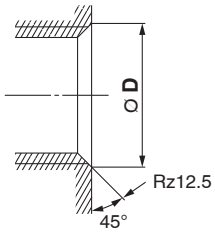

Nominal thread size	Chamfered dimension Ø **D**	
	Min.	Max.
1/8	9.8	10.2
1/4	13.3	13.7
3/8	16.8	17.2
1/2	21.0	21.4

2. Use G external threads with G internal threads.

How to distinguish between G and R threads

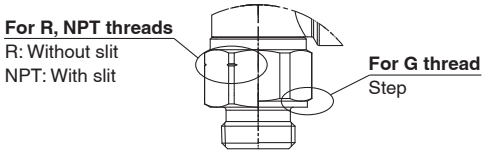

The proper tightening torques for hexagon lock nuts are shown in the table below.

For standard installation, turn 15 to 30° using a tool, after fastening by hand. Pay attention not to over tighten the product. Check the dimensions for each product for the width across flats.

Body size	Proper tightening torque [N·m]	Lock nut width across flats
M5	0.17	7
1/8	0.3	9
1/4	1	12
3/8	1.5	14
1/2	2	17

ASG Series
Specific Product Precautions 3

Be sure to read this before handling the products. Refer to the back cover for safety instructions. For flow control equipment precautions, refer to the "Handling Precautions for SMC Products" and the "Operation Manual" on the SMC website: https://www.smc.eu

Piping Threads with Sealant

⚠ Caution

1. **If the fitting is tightened with excessive torque, a large amount of sealant will seep out. Remove the excess sealant.**
2. **Insufficient tightening may loosen the threads or cause air leakage.**
3. **For reuse**
   1) Normally, fittings with a sealant can be reused up to 2 to 3 times.
   2) To prevent air leakage through the sealant, remove any loose sealant stuck to the fitting by blowing air over the threaded portion.
   3) If the sealant no longer provides effective sealing, wind sealant tape over the sealant before reusing. Do not use any form other than the tape type of sealant.
4. **Once the fitting has been tightened, backing it out to its original position often causes the sealant to become defective. Air leakage will occur.**
5. **Use R external threads with Rc internal threads and NPT external threads with NPT internal threads.**

Piping

⚠ Caution

1. **For handling One-touch fittings, refer to the Fittings and Tubing Precautions and the KQG2 Series Specific Product Precautions in the Catalogue on https://www.smc.eu.**
2. **Preparation before piping**
   Before piping is connected, it should be thoroughly blown out with air (flushing) or washed to remove chips, cutting oil, and other debris from inside the pipe.
3. **Winding of sealant tape**
   When screwing piping or fittings into ports, ensure that chips from the pipe threads or sealing material do not enter the piping. Also, if sealant tape is used, leave 1 thread ridge exposed at the end of the threads.

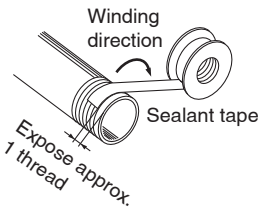

⚠ Safety Instructions

These safety instructions are intended to prevent hazardous situations and/or equipment damage. These instructions indicate the level of potential hazard with the labels of **"Caution," "Warning"** or **"Danger."** They are all important notes for safety and must be followed in addition to International Standards (ISO/IEC) [1], and other safety regulations.

⚠ **Caution:**	**Caution** indicates a hazard with a low level of risk which, if not avoided, could result in minor or moderate injury.
⚠ **Warning:**	**Warning** indicates a hazard with a medium level of risk which, if not avoided, could result in death or serious injury.
⚠ **Danger:**	**Danger** indicates a hazard with a high level of risk which, if not avoided, will result in death or serious injury.

1) ISO 4414: Pneumatic fluid power – General rules relating to systems.
ISO 4413: Hydraulic fluid power – General rules relating to systems.
IEC 60204-1: Safety of machinery – Electrical equipment of machines. (Part 1: General requirements)
ISO 10218-1: Manipulating industrial robots - Safety.
etc.

⚠ Warning

1. **The compatibility of the product is the responsibility of the person who designs the equipment or decides its specifications.**
   Since the product specified here is used under various operating conditions, its compatibility with specific equipment must be decided by the person who designs the equipment or decides its specifications based on necessary analysis and test results. The expected performance and safety assurance of the equipment will be the responsibility of the person who has determined its compatibility with the product. This person should also continuously review all specifications of the product referring to its latest catalogue information, with a view to giving due consideration to any possibility of equipment failure when configuring the equipment.

2. **Only personnel with appropriate training should operate machinery and equipment.**
   The product specified here may become unsafe if handled incorrectly. The assembly, operation and maintenance of machines or equipment including our products must be performed by an operator who is appropriately trained and experienced.

3. **Do not service or attempt to remove product and machinery/equipment until safety is confirmed.**
   1. The inspection and maintenance of machinery/equipment should only be performed after measures to prevent falling or runaway of the driven objects have been confirmed.
   2. When the product is to be removed, confirm that the safety measures as mentioned above are implemented and the power from any appropriate source is cut, and read and understand the specific product precautions of all relevant products carefully.
   3. Before machinery/equipment is restarted, take measures to prevent unexpected operation and malfunction.

4. **Contact SMC beforehand and take special consideration of safety measures if the product is to be used in any of the following conditions.**
   1. Conditions and environments outside of the given specifications, or use outdoors or in a place exposed to direct sunlight.
   2. Installation on equipment in conjunction with atomic energy, railways, air navigation, space, shipping, vehicles, military, medical treatment, combustion and recreation, or equipment in contact with food and beverages, emergency stop circuits, clutch and brake circuits in press applications, safety equipment or other applications unsuitable for the standard specifications described in the product catalogue.
   3. An application which could have negative effects on people, property, or animals requiring special safety analysis.
   4. Use in an interlock circuit, which requires the provision of double interlock for possible failure by using a mechanical protective function, and periodical checks to confirm proper operation.

⚠ Caution

1. **The product is provided for use in manufacturing industries.**
   The product herein described is basically provided for peaceful use in manufacturing industries.
   If considering using the product in other industries, consult SMC beforehand and exchange specifications or a contract if necessary.
   If anything is unclear, contact your nearest sales branch.

Limited warranty and Disclaimer/Compliance Requirements

The product used is subject to the following "Limited warranty and Disclaimer" and "Compliance Requirements".Read and accept them before using the product.

Limited warranty and Disclaimer

1. The warranty period of the product is 1 year in service or 1.5 years after the product is delivered, whichever is first. [2] Also, the product may have specified durability, running distance or replacement parts. Please consult your nearest sales branch.
2. For any failure or damage reported within the warranty period which is clearly our responsibility, a replacement product or necessary parts will be provided. This limited warranty applies only to our product independently, and not to any other damage incurred due to the failure of the product.
3. Prior to using SMC products, please read and understand the warranty terms and disclaimers noted in the specified catalogue for the particular products.

2) Vacuum pads are excluded from this 1 year warranty.
A vacuum pad is a consumable part, so it is warranted for a year after it is delivered. Also, even within the warranty period, the wear of a product due to the use of the vacuum pad or failure due to the deterioration of rubber material are not covered by the limited warranty.

Compliance Requirements

1. The use of SMC products with production equipment for the manufacture of weapons of mass destruction (WMD) or any other weapon is strictly prohibited.
2. The exports of SMC products or technology from one country to another are governed by the relevant security laws and regulations of the countries involved in the transaction. Prior to the shipment of a SMC product to another country, assure that all local rules governing that export are known and followed.

⚠ Caution

SMC products are not intended for use as instruments for legal metrology.
Measurement instruments that SMC manufactures or sells have not been qualified by type approval tests relevant to the metrology (measurement) laws of each country.
Therefore, SMC products cannot be used for business or certification ordained by the metrology (measurement) laws of each country.

SMC Corporation (Europe)

Austria	+43 (0)2262622800	www.smc.at	office@smc.at
Belgium	+32 (0)33551464	www.smc.be	info@smc.be
Bulgaria	+359 (0)2807670	www.smc.bg	office@smc.bg
Croatia	+385 (0)13707288	www.smc.hr	office@smc.hr
Czech Republic	+420 541424611	www.smc.cz	office@smc.cz
Denmark	+45 70252900	www.smcdk.com	smc@smcdk.com
Estonia	+372 651 0370	www.smcee.ee	info@smcee.ee
Finland	+358 207513513	www.smc.fi	smcfi@smc.fi
France	+33 (0)164761000	www.smc-france.fr	supportclient@smc-france.fr
Germany	+49 (0)61034020	www.smc.de	info@smc.de
Greece	+30 210 2717265	www.smchellas.gr	sales@smchellas.gr
Hungary	+36 23513000	www.smc.hu	office@smc.hu
Ireland	+353 (0)14039000	www.smcautomation.ie	sales@smcautomation.ie
Italy	+39 03990691	www.smcitalia.it	mailbox@smcitalia.it
Latvia	+371 67817700	www.smc.lv	info@smc.lv
Lithuania	+370 5 2308118	www.smclt.lt	info@smclt.lt
Netherlands	+31 (0)205318888	www.smc.nl	info@smc.nl
Norway	+47 67129020	www.smc-norge.no	post@smc-norge.no
Poland	+48 222119600	www.smc.pl	office@smc.pl
Portugal	+351 214724500	www.smc.eu	apoioclientept@smc.smces.es
Romania	+40 213205111	www.smcromania.ro	smcromania@smcromania.ro
Russia	+7 (812)3036600	www.smc.eu	sales@smcru.com
Slovakia	+421 (0)413213212	www.smc.sk	office@smc.sk
Slovenia	+386 (0)73885412	www.smc.si	office@smc.si
Spain	+34 945184100	www.smc.eu	post@smc.smces.es
Sweden	+46 (0)86031240	www.smc.nu	smc@smc.nu
Switzerland	+41 (0)523963131	www.smc.ch	info@smc.ch
Turkey	+90 212 489 0 440	www.smcturkey.com.tr	satis@smcturkey.com.tr
UK	+44 (0)845 121 5122	www.smc.uk	sales@smc.uk
South Africa	+27 10 900 1233	www.smcza.co.za	zasales@smcza.co.za

Printing BU 00 Printed in Spain

Specifications are subject to change without prior notice and any obligation on the part of the manufacturer