Doc. No.SJ3000-OMM0001

# Operation Manual

3 Position 3 Port Solenoid Valve
for Vacuum Release Valve

PRODUCT NAME

*SJ3A6 Series*

MODEL/ Series

**SMC Corporation**

# Contents

# Safety Instructions

These safety instructions are intended to prevent hazardous situations and/or equipment damage.
These instructions indicate the level of potential hazard with the labels of “Caution,” “Warning” or “Danger.”
They are all important notes for safety and must be followed in addition to International Standards (ISO/IEC), Japan Industrial Standards (JIS)*1) and other safety regulations*2).

*1) ISO 4414: Pneumatic fluid power -- General rules relating to systems
ISO 4413: Hydraulic fluid power -- General rules relating to systems
IEC 60204-1: Safety of machinery -- Electrical equipment of machines (Part 1: General requirements)
ISO 10218-1992: Manipulating industrial robots -- Safety
JIS B 8370: General rules for pneumatic equipment.
JIS B 8361: General rules for hydraulic equipment.
JIS B 9960-1: Safety of machinery – Electrical equipment for machines. (Part 1: General requirements)
JIS B 8433-1993: Manipulating industrial robots - Safety. etc.

*2) Labor Safety and Sanitation Law, etc.

| | |
|---|---|
| ⚠ **Caution** | Operator error could result in injury or equipment damage. |
| ⚠ **Warning** | Operator error could result in serious injury or loss of life. |
| ⚠ **Danger** | In extreme conditions, there is a possibility of serious injury or loss of life. |

## ⚠ Warning

**1. The compatibility of the product is the responsibility of the person who designs the equipment or decides its specifications.**
Since the product specified here is used under various operating conditions, its compatibility with specific equipment must be decided by the person who designs the equipment or decides its specifications based on necessary analysis and test results.
The expected performance and safety assurance of the equipment will be the responsibility of the person who has determined its compatibility with the product.
This person should also continuously review all specifications of the product referring to its latest catalog information, with a view to giving due consideration to any possibility of equipment failure when configuring the equipment.

**2. Only personnel with appropriate training should operate machinery and equipment.**
The product specified here may become unsafe if handled incorrectly.
The assembly, operation and maintenance of machines or equipment including our products must be performed by an operator who is appropriately trained and experienced.

**3. Do not service or attempt to remove product and machinery/equipment until safety is confirmed.**
The inspection and maintenance of machinery/equipment should only be performed after measures to prevent falling or runaway of the driven objects have been confirmed.
When the product is to be removed, confirm that the safety measures as mentioned above are implemented and the power from any appropriate source is cut, and read and understand the specific product precautions of all relevant products carefully.
Before machinery/equipment is restarted, take measures to prevent unexpected operation and malfunction.

**4. Contact SMC beforehand and take special consideration of safety measures if the product is to be used in any of the following conditions.**
1) Conditions and environments outside of the given specifications, or use outdoors or in a place exposed to direct sunlight.
2) Installation on equipment in conjunction with atomic energy, railways, air navigation, space, shipping, vehicles, military, medical treatment, combustion and recreation, or equipment in contact with food and beverages, emergency stop circuits, clutch and brake circuits in press applications, safety equipment or other applications unsuitable for the standard specifications described in the product catalog.
3) An application which could have negative effects on people, property, or animals requiring special safety analysis.
4) Use in an interlock circuit, which requires the provision of double interlock for possible failure by using a mechanical protective function, and periodical checks to confirm proper operation.

# Safety Instructions

**⚠ Caution**

**The product is provided for use in manufacturing industries.**
The product herein described is basically provided for peaceful use in manufacturing industries.
If considering using the product in other industries, consult SMC beforehand and exchange specifications or a contract if necessary.
If anything is unclear, contact your nearest sales branch.

## Limited warranty and Disclaimer/Compliance Requirements

The product used is subject to the following “Limited warranty and Disclaimer” and “Compliance Requirements”.
Read and accept them before using the product.

### Limited warranty and Disclaimer

**The warranty period of the product is 1 year in service or 1.5 years after the product is delivered.*3) Also, the product may have specified durability, running distance or replacement parts. Please consult your nearest sales branch.**

**For any failure or damage reported within the warranty period which is clearly our responsibility, a replacement product or necessary parts will be provided.**
**This limited warranty applies only to our product independently, and not to any other damage incurred due to the failure of the product.**

**Prior to using SMC products, please read and understand the warranty terms and disclaimers noted in the specified catalog for the particular products.**

***3) Vacuum pads are excluded from this 1 year warranty.**
**A vacuum pad is a consumable part, so it is warranted for a year after it is delivered.**
**Also, even within the warranty period, the wear of a product due to the use of the vacuum pad or failure due to the deterioration of rubber material are not covered by the limited warranty.**

### Compliance Requirements

When the product is exported, strictly follow the laws required by the Ministry of Economy, Trade and Industry (Foreign Exchange and Foreign Trade Control Law).

# *SJ3A6 Series*

# Precautions for 3 Position 3 Port Solenoid Valve ①

**Be sure to read before handling.**

## Design / Selection

### ⚠ Warning

**1. Confirm the specifications.**

Products represented in this manual are designed only for use in compressed air systems (including vacuum).

Do not operate at pressures or temperatures, etc., beyond the range of specifications, as this can cause damage or malfunction. (Refer to the specifications.)

Please contact SMC when using a fluid other than compressed air (including vacuum).

We do not guarantee against any damage if the product is used outside of the specification range.

**2. Holding pressure (including vacuum)**

Since the valves are subject to air leakage, they cannot be used for applications such as holding pressure (including vacuum) in a pressure vessel.

**3. Not suitable for use as an emergency shutoff valve, etc.**

The valves listed in this manual are not designed for safety applications such as an emergency shutoff valve. If the valves are used for the mentioned applications, additional safety measures should be adopted.

**4. Release of residual pressure**

For maintenance purposes install a system for releasing residual pressure.

**5. Operation in a vacuum condition**

Although this product is provided with the filter to avoid entering of foreign matters from the inside of 2(B)port, countermeasure against suction of particles from the suction pad and exhaust pad and foreign matters when the valve is used as relief valve.

**6. Regarding a vacuum switch valve and a vacuum release valve**

If a non-vacuum valve is installed in the middle of piping system having a vacuum, the vacuum condition will not be maintained. Use a valve designed for use under vacuum condition.

**7. Ventilation**

Provide ventilation when using a valve in a confined area, such as in a closed control panel. For example, install a ventilation opening, etc. in order to prevent pressure from increasing inside of the confined area and to release the heat generated by the valve.

**8. Extended periods of continuous energization**

- If a valve will be continuously energized for an extended period of time, the temperature of the valve will increase due to the heat generated by the coil. This will likely adversely affect the performance of the solenoid valve and any nearby peripheral equipment. Therefore, when it is continuously energized or the energized period per day is longer than the de-energized period use the valve with a power saving circuit.
- For applications such as mounting a valve on a control panel, incorporate measure to limit the heat radiation so that the temperature will be high when a 3 station manifold.

**9. Do not disassemble the product or make any modifications, including additional machining.**

It may cause human injury and/or an accident.

**10. Safe designs should be developed, which account for the possibility of accidents resulting from a drop in vacuum pressure due to power failure or trouble with the air supply, etc.**

If vacuum pressure drops and there is a loss of vacuum pad adsorption force, workpieces being carried may fall, causing human injury or damage to machinery. Sufficient safety measures should be implemented, such as drop prevention, to avoid any accidents.

**11. Valve lock switch**

SJ3A6 series manifold valve(relief valve with orifice) does not have the valve lock switch for connection. Before tightening thread, ensure there is no gap between valves when mounting.

### ⚠ Caution

**1. Leakage voltage**

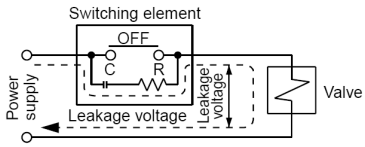


Take note that the leakage voltage will increase when a resistor is used in parallel with switching element or a C-R circuit (surge voltage suppressor) is used for protecting a switching device because of the passing leakage voltage through the C-R circuit. The suppressor residual leakage voltage should be 3% or less of the rated voltage.

**2. Surge voltage suppressor**

If a surge protection circuit contains nonstandard diodes, such as Zener diodes or varistor, a residual voltage that is in proportion to the protective circuit and the rated voltage will remain. Therefore, take into consideration the surge voltage protection of the controller.

In the case of diodes, the residual voltage is approximately 1 V.

**3. Surge voltage intrusion**

With non-polar type solenoid valves, at times of sudden interruption of the loading power supply, such as emergency shutdown, surge voltage intrusion may be generated from loading equipment with a large capacity (power consumption), and the solenoid valve in a de-energized state may switch over (see Figure 1).

When installing a breaker circuit for the loading power supply, consider using a solenoid valve with polarity (with polarity protection diode), or install a surge absorption diode between the loading equipment COM line and the output equipment COM line (see Figure 2).

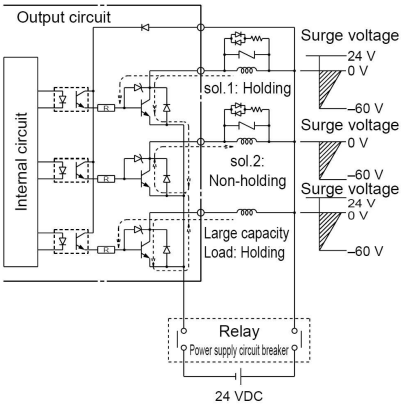


**Figure 1. Surge intrusion circuit example (NPN outlet example)**

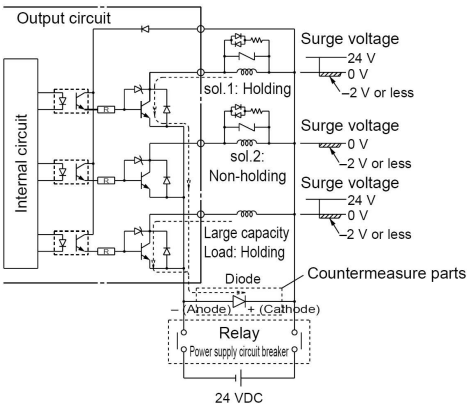


**Figure 2. Surge intrusion circuit example (NPN outlet example)**

# *SJ3A6 Series*

# Precautions for 3 Position 3 Port Solenoid Valve ②

**Be sure to read before handling.**

## Design / Selection

### ⚠ Caution

**4. Operation in a low temperature condition**

It is possible to operate a valve in extreme temperature, as low as -10°C. Take appropriate measures to avoid freezing of drainage, moisture etc. in low temperature.

**5. Mounting orientation**

Mounting orientation is free.

**6. For information on related items, such as vacuum equipment, refer to the caution sections in each respective catalog.**

## Mounting

### ⚠ Warning

**1. Operation manual**

Install the products and operate them only after reading the operation manual carefully and understanding its contents. Also, keep the manual where it can be referred to as necessary.

**2. Ensure sufficient space for maintenance activities.**

When installing the products, allow access for maintenance.

**3. Tighten threads with the proper tightening torque.**

When installing the products, follow the listed torque specifications.

**4. If air leakage increases or equipment does not operate properly, stop operation.**

Check mounting conditions when air and power supplies are connected. Initial function and leakage tests should be performed after installation.

**5. Painting and coating**

Warnings or specifications printed or affixed to the product should not be erased, removed or covered up.

Please consult with SMC before applying paint to resinous parts, as this may have an adverse effect due to the solvent in the paint.

## Piping

### ⚠ Caution

**1. Preparation before piping**

Before piping is connected, it should be thoroughly blown out with air (flushing) or washed to remove chips, cutting oil and other debris from inside the pipe.

**2. Wrapping of pipe tape**

When screwing piping or fittings into ports, ensure that chips from the pipe threads or sealing material do not enter the piping. Also, if pipe tape is used, leave 1.5 to 2 thread ridges exposed at the end of the threads.

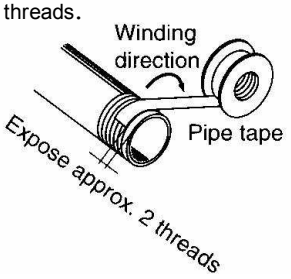


**3. Connection of fittings**

When screwing fittings into valves, tighten as follows.

(1) Follow the procedures below when installing an SMC fitting, etc.

**M5**

After tightening the fitting by hand, use a wrench to tighten the fitting an additional approximately 1/6 to 1/4 turn.

As a reference value, tightening torque is 1 to 1.5 N·m.

Note) If tightened excessively, the thread of the product may break or the gasket may deform. If tightened insufficiently, the thread of the product may become loose. In either case, air leakage can occur.

(2) Follow the procedure of the manufacture when fittings other than SMC is used.

**4. Piping to products**

When piping to a product, refer to the operation manual to avoid mistakes regarding the supply port, etc.

**5. Be certain that there are no crushed areas in the piping due to damage or bending.**

## Wiring

### ⚠ Caution

**1. Polarity**

When connecting power to a solenoid valve with a DC specification and equipped with a light or surge voltage suppressor, check for polarity.

If there is polarity, take note of the following.

**No diode to protect polarity:**

If a mistake is made regarding the polarity, damage may occur to the diode in the valve, the switching element in a control device or power supply equipment, etc.

**With diode to protect polarity:**

If polarity connection is wrong, the valve does not operate.

**2. Applied voltage**

When electric power is connected to a solenoid valve, be careful to apply the proper voltage. Improper voltage may cause malfunction or coil damage.

**3. Check the connections.**

Check if the connections are correct after completing all wiring.

## Lubrication

### ⚠ Warning

**Lubrication**

1) The valve has been lubricated for life by the factory and does not require any further.

2) If a lubricant is used in the system, use class 1 turbine oil (no additive), ISO VG32.

Once a lubricant is used in the system, lubrication must be continued because the original lubricant applied during manufacturing will be washed away.

If turbine oil is used, refer to the Material Safety Data Sheet (MSDS) of the oil.

# *SJ3A6 Series*

# Precautions for 3 Position 3 Port Solenoid Valve ③

**Be sure to read before handling.**

## Air Supply

### ⚠ Warning

**1. Type of fluids**

Please consult with SMC when using the product in applications other than compressed air.

**2. When there is a large amount of drainage.**

Compressed air containing a large amount of drainage can cause malfunction of pneumatic equipment. An air dryer or water separator should be installed upstream from filters.

**3. Drain flushing**

If condensation in the drain bowl is not emptied on a regular basis, the bowl will overflow and allow the condensation to enter the compressed air lines. It causes malfunction of pneumatic equipment.

If the drain bowl is difficult to check and remove, installation of a drain bowl with an auto drain option is recommended.

For compressed air quality, refer to SMC's Best Pneumatics catalog.

**4. Use clean air.**

Do not use compressed air that contains chemicals, synthetic oils including organic solvents, salt or corrosive gases, etc., as it can cause damage or malfunction.

### ⚠ Caution

**1. When extremely dry air is used as the fluid, degradation of the lubrication properties in side the equipment may occur, resulting in reduced reliability (or reduced service life) of the equipment. Please consult with SMC.**

**2. Install an air filter.**

Install an air filter upstream near the valve. Select an air filter with a filtration size of 5 μm or smaller.

**3. Take measures to ensure air quality, such as by installing an aftercooler, air dryer, or water separator.**

Compressed air that contains a large amount of drainage can cause malfunction of pneumatic equipment such as valves. Therefore, take appropriate measures to ensure air quality, such as by providing an aftercooler, air dryer, or water separator.

**4. If excessive carbon powder is seen, install a mist separator on the upstream side of the valve.**

If excessive carbon dust is generated by the compressor, it may adhere to the inside of a valve and cause it to malfunction.

For compressed air quality, refer to SMC's Best Pneumatics catalog.

## Operating Environment

### ⚠ Warning

**1. Do not use in an atmosphere having corrosive gases, chemicals, sea water, water, water steam, or where there is direct contact with any of these.**

**2. Do not use in an environment where flammable gas or explosive gas exists. Usage may cause a fire or explosion. The products do not have an explosion proof construction.**

**3. Do not use in a place subject to heavy vibration and/or shock.**

**4. The valve should not be exposed to prolonged sunlight. Use a protective cover.**

**5. Remove any sources of excessive heat.**

**6. If it is used in an environment where there is possible contact with oil, weld spatter, etc., exercise preventive measures.**

**7. When the solenoid valve is mounted in a control panel or its energized for a long time, make sure ambient temperatures is within the specification of the valve.**

## Maintenance

### ⚠ Warning

**1. Perform maintenance inspection according to the procedures indicated in the operation manual.**

If handled improperly, malfunction and damage of machinery or equipment may occur.

**2. Removal of equipment, and supply/exhaust of compressed air**

When components are removed, first confirm that measures are in place to prevent workpieces from dropping, run-away equipment, etc. Then, cut off the supply pressure and electric power, and exhaust all compressed air from the system using the residual pressure release function.

When the equipment is operated after remounting or replacement, first confirm that measures are in place to prevent lurching of actuators, etc. Then, confirm that the equipment is operating normally.

**3. Low frequency operation**

Valves should be operated at least once every 30 days to prevent malfunction. (Use caution regarding the air supply.)

**4. Manual override**

When the manual override is operated, connected equipment will be actuated.

Operate after safety is confirmed.

**5. Maintenance work**

If handled improperly, compressed air can be dangerous. Assembly, handling, repair and element replacement of pneumatic systems should be performed by a knowledgeable and experienced person.

**6. Clean suction filters and silencers on a regular basis.**

The performance of an ejector will deteriorate due to clogged filters and silencers. High flow filters should be used, especially in dusty locations.

### ⚠ Caution

**1. Drain flushing**

Remove drainage from the air filters regularly.

**2. Lubrication**

In the case of rubber seals, once lubrication has been started, it must be continued.

Use class 1 turbine oil (with no additive), ISO VG32 because if other lubricant oil is used, it may cause malfunction. Please contact SMC for suggested class 2 turbine oil (with additive), ISOVG32.

# *SJ3A6 Series*

# Specific Product Precautions 1

**Be sure to read before handling.**

## Manual Override Operation

### ⚠ Warning

When the manual override is operated, connected equipment will be actuated. Confirm safety before operating.

■ **Non-locking push type**

Press in the direction of the arrow.

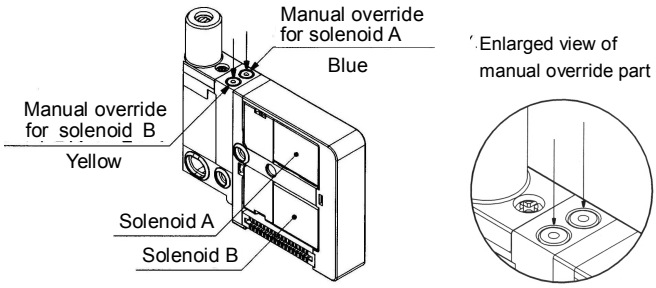


■ **Push-turn locking slotted type**

While pressing, turn in the direction of the arrow (90° clockwise).

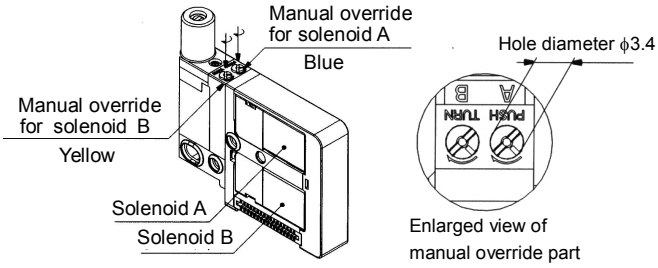


### ⚠ Caution

When you operate the D type with a screwdriver, turn it gently using a watchmaker's screwdriver. [Torque: under 0.05 N·m]
When you lock the manual override of the D type, be sure to push it before turning. [Load: 10 N or less] Turning without pushing can cause damage to the manual override and trouble such as air leakage, etc.

## Light/surge Voltage Suppressor

### ⚠ Caution

■ **Non-polar type**

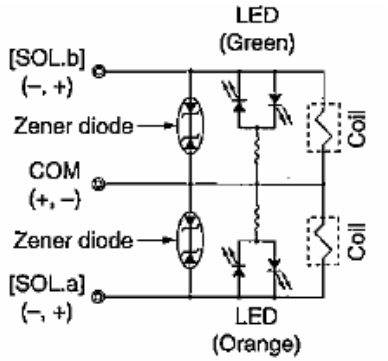


■ **Polar type**

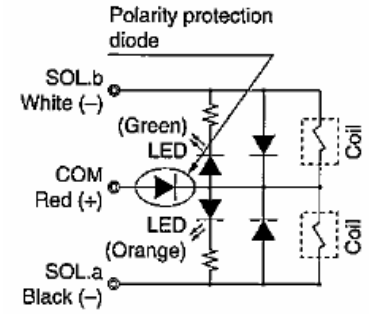


## Continuous Duty

### ⚠ Caution

■ **With power saving circuit**

Compared to the standard products, power consumption is reduced down to approx. 1/3 (in case of SJ3□60T) by cutting the unnecessary wattage required to hold the valve in an energized state. (Effective energizing time is over 67 ms at 24 VDC.)

**Electric circuit diagram (with power saving circuit)**

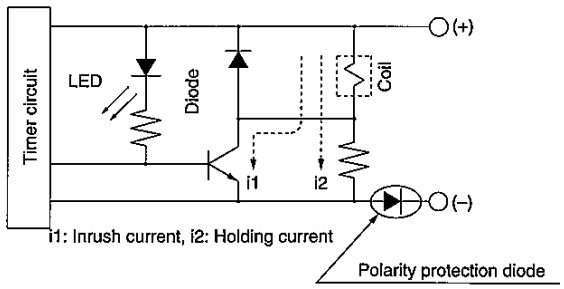


- When a power saving circuit is installed, a diode to prevent reverse current is not available for 12 VDC spec. Therefore, use caution not to connect in reverse.
- Be careful about the allowable voltage fluctuation since a voltage drop of about 0.5 V occurs due to a transistor. (Refer to the solenoid specifications of valve for details.)

## Light Indication

### ⚠ Caution

When equipped with light/surge voltage suppressor, the light window turns orange when solenoid A is energized, and it turns green when solenoid B is energized.

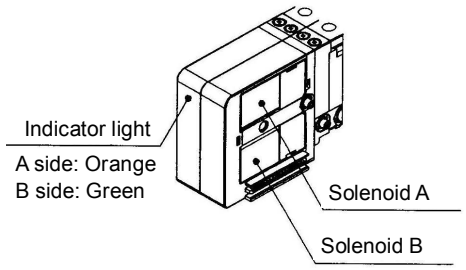

# *SJ3A6 Series*

# Specific Product Precautions 2

**Be sure to read before handling.**

## Changing the Connector Entry Direction

### Caution

To change the connector's entry direction, set the switch on the top of the connector block to the FREE position, before turning the connector. Make sure to set the switch back to the LOCK position before connecting the connector. (When the switch is difficult to slide, move the connector a little so that it will slide easier.)

If an excessive force is applied on the connector in the LOCK position, the connector block may be damaged. Also, using in such a way that the connector floats in the FREE position, it may cause the lead wire, etc. to break. Thus, refrain from using in these ways.

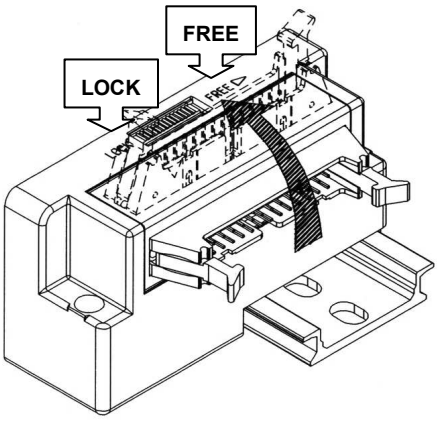


## Manifold Mounting

When attaching a manifold to a mounting surface, etc., with bolts, if the entire bottom surface of the DIN rail contacts the mounting surface in a horizontal mounting, it can be used by simply securing both ends of the DIN rail. However, for any other mounting method or for side facing and rear facing, etc., secure the DIN rail with bolts at uniform intervals using the following as a guide: 2 to 5 stations at 2 locations, 6 to 10 stations at 3 locations, 11 to 15 stations at 4 locations, 16 to 20 stations at 5 locations, 21 to 25 stations at 6 locations, 26 to 30 stations at 7 locations and more than 30 stations at 8 locations.

In addition, even in the case of a horizontal mounting, if the mounting surface is subject to vibration, etc., take the same measures indicated above. If secured at fewer than the specified number of locations, warping or twisting may occur in the DIN rail and manifold, causing trouble such as air leakage.

## Fitting Assembly Replacement

### Caution

By replacing a valve's fitting assembly, it is possible to change the port size of the 4(A), 2(B), 1(P), and 3/5(E) ports. When replacing it, pull out the fitting assembly after removing the clip with a flat heat screwdriver, etc. To mount a new fitting assembly, insert it into place and then fully reinsert the clip.

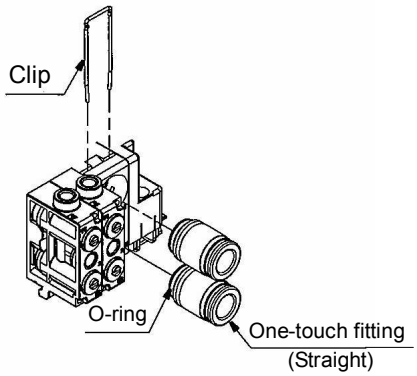


Note 1) To change the port size of the 1(P), 3/5(E) ports into the port sizes other than $\phi$8 (straight), specify the change by means of the manifold specification sheet.

Note 2) Be careful to avoid damage or contamination to the O-rigs, as this can cause air leakage.

Note 3) Be sure to turn off the power and stop the supply of air before disassembly. Furthermore, since air may remain inside piping and manifold, confirm that the air is completely exhausted before starting any work.

Note 4) While inserting a tubing into an elbow-type fitting assembly, hold the main body of the assembly by hand. Failure to do so will exert an undue force on the valve or the fitting assembly, resulting in air leakage or damage.

## Filter replacement instructions

### Caution

If there are situations such as filter clogging, a drop in suction force, or slow response time, stop operation and replace the filter.

1. Using a precision driver, remove the filter assembly from the main unit.
2. Turn the filter guide by hand and remove.
3. Replace the filter and gently hand tighten the filter guide. At this time, check that there is no foreign matter on the O-ring of the filter assembly.
4. Return the filter assembly to the main unit.
   (Tightening torque: 0.12 N·m)

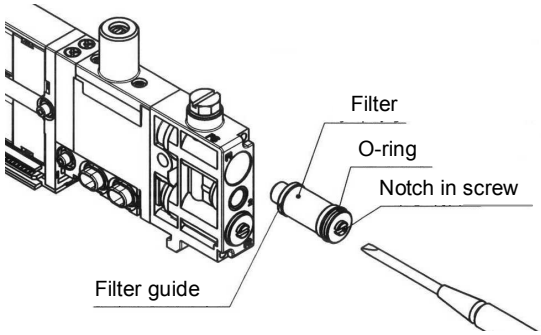

# *SJ3A6 Series*

# Specific Product Precautions 3

**Be sure to read before handling.**

## One-touch Fittings

### ⚠ Caution

**1. Tube attachment/detachment for one-touch fittings**

1) Attaching of tubing

(1) Take a tube having no flaws on its periphery and cut it off at a right angle. When cutting the tube, use tube cutters TK-1, 2 or 3. Do not use pinchers, nippers or scissors, etc. If cutting is done with tools other than tube cutters, there is the danger that the tube may be cut diagonally or become flattened, etc., making a secure installation impossible, and causing problems such as the tube pulling out after installation or air leakage,

(2) Grasp the tube and push it in slowly, inserting it securely all the way into the fitting.

(3) After inserting the tube, pull on it lightly to confirm that it will not come out. If it is not installed securely all the way into the fitting, this can cause problems such as air leakage or the tube pulling out.

2) Detaching of tubing

(1) Press the release bush to the end with pressing the collar evenly.

(2) Pull out the tube while holding down the release button so that it does not come out. If the release button is not pressed down sufficiently, there will be increased bite on the tube and it will become more difficult to pull it out.

(3) When the removed tube is to be used again, cut off the portion which has been chewed before reusing it. If the chewed portion of the tube is used as is, this can cause trouble such as air leakage or difficulty in removing the tube.

## Other Tubing Brands

### ⚠ Caution

**1. When using tube other than SMC brand, confirm the following specifications are satisfied with respect to the outside diameter tolerance of the tube.**

| | |
|---|---|
| 1) Nylon tubing | within +/-0.1mm |
| 2) Soft nylon tubing | within +/-0.1mm |
| 3) Polyurethane tubing | within +0.15mm, within -0.2mm |

Do not use tubing which does not meet these outside diameter tolerances. It may not be possible to connect them, or they may cause other troubles, such as air leakage or the tube pulling out after connection.

## How to Use Plug Connector

### ⚠ Caution

When attaching and detaching a connector, first shut off the electric power and the air supply.
Also, crimp the lead wires and sockets securely.

**1. Attaching and detaching connectors**

- To attach a connector, hold the lever and connector unit between your fingers and insert straight onto the pins of the solenoid valve so that the lever's pawl is pushed into the groove and locks.
- To detach a connector, remove the pawl from the groove by pushing the lever downward with your thumb, and pull the connector straight out.

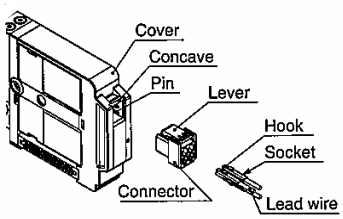


**2. Crimping of lead wires and sockets**

Peel 3.2 to 3.7 mm of the tip of lead wire, enter the core wires neatly into a socket and crimp it with a special crimp tool. Be careful so that the cover of lead wire does not enter into the crimping part. (Crimping tool: Model no. DXT170-75-1)

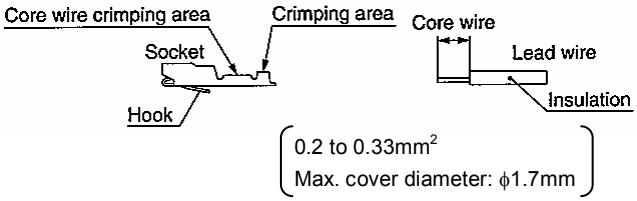


**3. Attaching and detaching lead wires with sockets**

**- Attaching**

Insert the sockets into the square holes of the connector (with A, B, C, and N indication), and continue to push the sockets all the way in until the lock by hooking into the seats in the connector. (When they are pushed in, their hooks open and they are locked automatically.) Next, confirm that they are locked by pulling lightly on the lead wires.

**- Detaching**

To detach a socket from a connector, pull out the lead wire while pressing the socket's hook with a stick having a thin tip (approx. 1 mm). If the socket is used again, spread the hook outward.

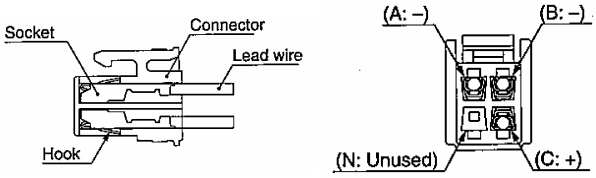

# *SJ3A6 Series*

# Specific Product Precautions 4

**Be sure to read before handling.**

## Plug Connector Lead Wire Length

### Caution

Plug connector lead wires have a standard length of 300 mm, however, the following lengths are also available.

## Connector Assembly Part No.

**SJ3000-46-D-□**

● Lead wire length

| | |
|---|---|
| Nil | 300mm |
| 6 | 600mm |
| 10 | 1000mm |
| 15 | 1500mm |
| 20 | 2000mm |
| 25 | 2500mm |
| 30 | 3000mm |
| 50 | 5000mm |

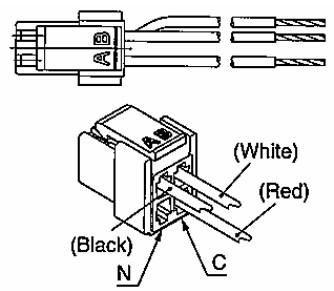


Without lead wire : SJ3000-46-D-N
(Connector, Socket x 3 pcs. only)

**How to Order**

Include the connector assembly part number together with the part number for the plug connector's solenoid valve without connector.

(Example) Lead wire length 2000 mm
SJ3A6N-5MOZ
SJ3000-46-D-20

## Connector Assembly for Manifolds (for Junction Common)

### Caution

Using the connector assembly (for junction common) for solenoid valves installed in the manifold reduces the labor involved in wiring work because common wiring for all solenoid valves is integrated into a single wire.

## Connector Assembly Part No.(for Junction Common)

**SJ3000-46-DC-□**

● Lead wire length

● For junction common

| | |
|---|---|
| Nil | 300mm |
| 6 | 600mm |
| 10 | 1000mm |
| 15 | 1500mm |
| 20 | 2000mm |
| 25 | 2500mm |
| 30 | 3000mm |
| 50 | 5000mm |

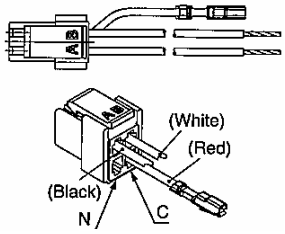


**How to Order**

Indicate the part no. of the connector assembly for the manifold and solenoid valve.

If the arrangement is complicated, please specify them by means of the manifold specification sheet.

Note 1) Applications like connectors not wired to a valve is not possible.

Note 2) For the solenoid valve, please designate "No connector (MOZ)" for the connector type.

Note 3) Connector assembly with lead wire for place where the signals are transmitted to the common wiring. (Only the valves of first station and/or last station of manifold are compatible to connector with lead wire for common.)

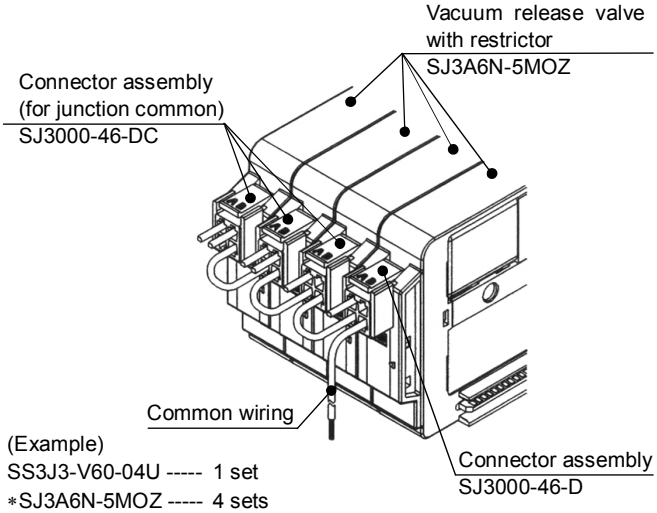


(Example)
SS3J3-V60-04U ----- 1 set
∗SJ3A6N-5MOZ ----- 4 sets
∗SJ3000-46-D ------- 1 set (Connector assembly for single solenoid)
∗SJ3000-46-DC ----- 3 sets(Connector assembly for single solenoid) (for junction common)

→ The asterisk denotes the symbol for assembly. Prefix it to the part nos. of the solenoid valve, etc.

# *SJ3A6 Series*

# Specific Product Precautions 5

**Be sure to read before handling.**

**Wiring Instructions for Connector Assembly (for Junction Common)**

## ⚠ Caution

If only connector assembly (for junction common) is ordered, please wire according to the instructions in the diagram below.
For details on socket mounting, please refer to "How to Use Plug Connector" on the back page 9.

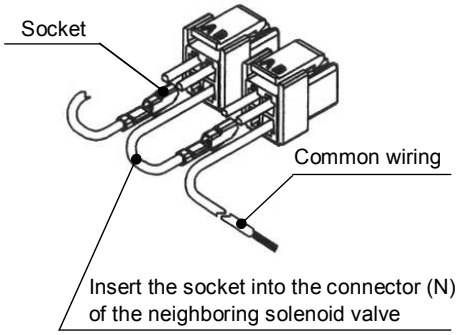


**How to Wire to PC Wiring System Compliant Power Supply Terminal**

## ⚠ Caution

**Wire connection instructions**

1. **Strip 6.5 to 7.5 mm from the tip of the lead wire.**
2. **Loosen the terminal screws (slotted screws) of the power supply terminal connectors, plug the core wire of the lead wire into the square holes of the connector, tighten terminal screws at the proper torque, and fasten them securely. (Gently pull the lead wire and check that it is fastened.)**

**Precautions**

- To remove the power supply terminal connector, pull it upward as is. When mounting, push it in until it makes a snapping noise.
- When connecting wire, be careful because using lead wire that is outside of compatible lead wire ranges, or that are tightened to anything other than the proper torque, creates a risk of defective contact and other problems.

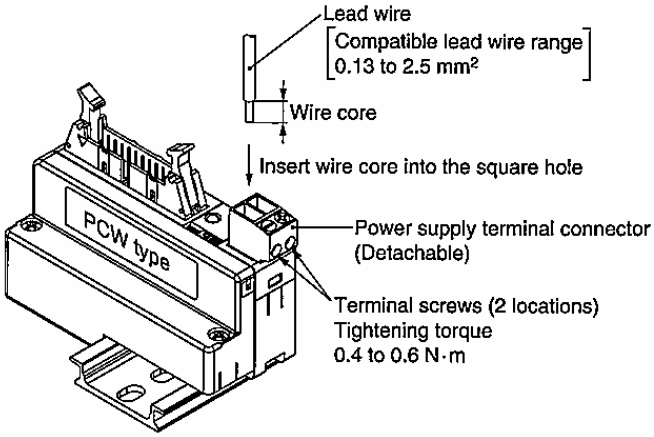

## TROUBLESHOOTING

Should any trouble be found during operation, trace the source of the trouble in the following order and take corrective action.

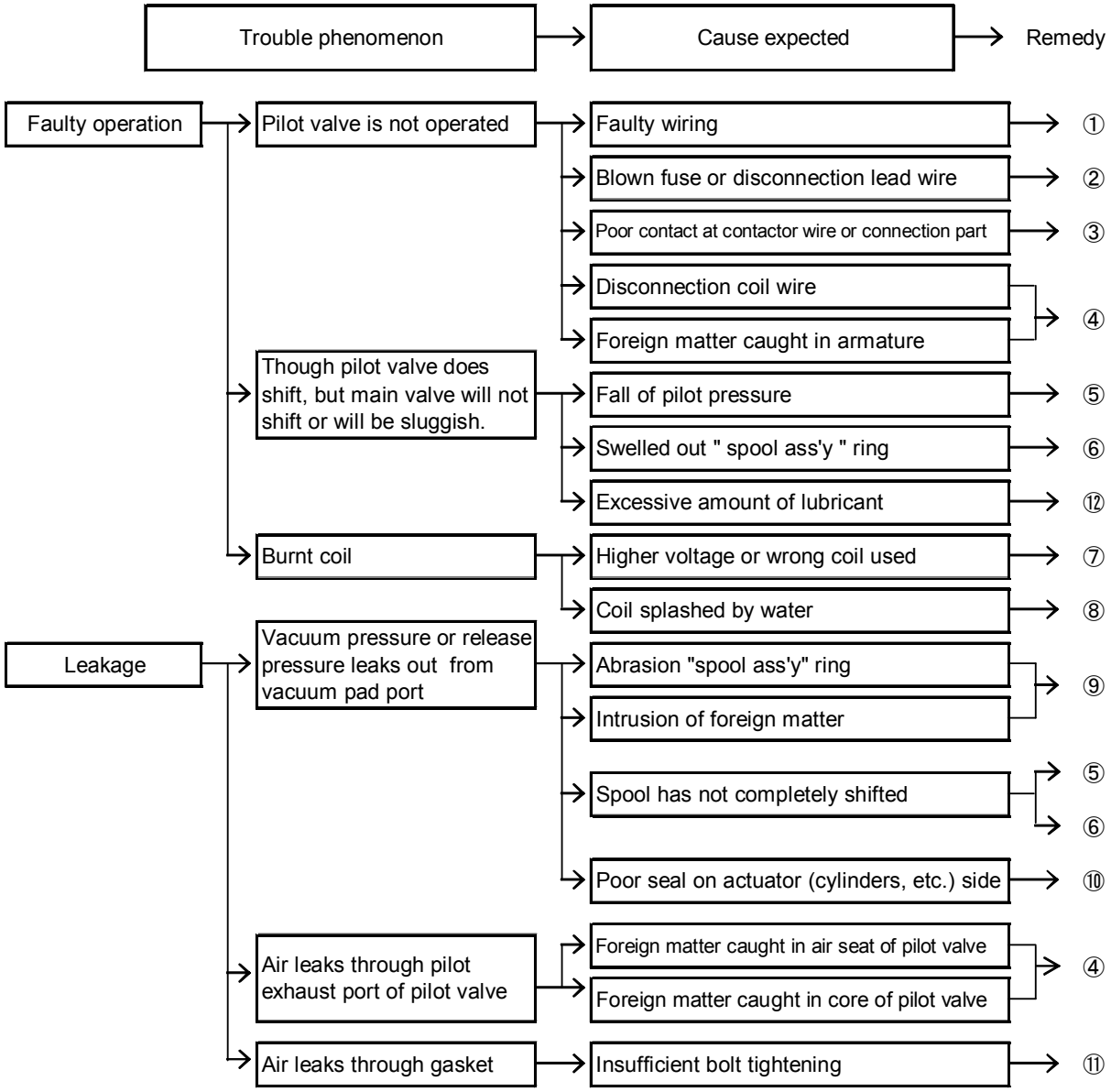

## Remedy

| No. | Remedy |
|---|---|
| ① | Re-wire correctly. |
| ② | Replace part. |
| ③ | Replace part or re-wire positively. |
| ④ | Replace valve. |
| ⑤ | Regulate pressure so that pilot pressure will fall within operating pressure range during operation. |
| ⑥ | ·If wrong oil is used, completely air blow to remove oil, and replace valve. After valve is replaced, use turbine oil class 1 (ISO VG32). |
| | ·When a large quantity of drain is given and cannot carry out drain omission surely, install either an auto-drain or a dryer.The valve should be replaced. |
| ⑦ | Check voltage. Replace valve (pilot valve). |
| ⑧ | Protect the valve so that water does not splash the coil. Replace valve (pilot valve). |
| ⑨ | In case of intrusion of foreign matter, to remove foreign matter by air blow of piping and then replace valve. |
| ⑩ | Repair or replace actuators. |
| ⑪ | After stopping air and re-tighten the bolts. |
| ⑫ | Reduce the amount of lubricant to the degree that no oil splashes out of the vacuum pad port. |

If no improvement is achieved in spite of the above countermeasure, inside of the valve may have some abnomality. In this case, stop using the valve immediately.

If any of followings are carried out, inside of the valve may have some failure. In this case, stop using the valve immediately.

1. Voltage out of rated voltage has been used.
2. Oil other than the specified one has been lubricated.
3. Lubrication has been stopped intermediately, or lubrication was suspended temporary.
4. Water splashed directely.
5. Strong impact was given.
6. Alien substance such as drain and particle got into. Drain or garbage invaded a valve.
7. Prohibited way of using the valve which is written at "Precautions" section in this operation manual was carried out excluding above-mentioned.

In addition, in the case of trouble, please send it back to the supplier for repair or replacement.

| Record of changes |
| --- |
| |

1st printing MY


# SMC Corporation

4-14-1, Sotokanda, Chiyoda-ku, Tokyo 101-0021 JAPAN
Tel: + 81 3 5207 8249 Fax: +81 3 5298 5362
URL http://www.smcworld.com





SJ3000-OMM0001