Doc.ZL3-OM00601-A

Operation Manual

Product name

Multistage ejector

Model/ Series/ Product Number

ZL3 Series
ZL6 Series

SMC Corporation

Contents

Safety Instructions 2
1. How to Order 5
2. Summary of Product Parts 6
3. Mounting and Installation 7
3.1. Installation 7
3.2. Operating Enviroment 8
3.3. Air Supply 9
3.4. Piping 10
3.5. Wiring 12
4. Solenoid Valve 13
5. Vacuum Pressure Switch 14
6. Vaccum release flow adjusting needle 15
7. Structural Drawing and Replacement of Parts 16
8. Maintenaunce 20
9. Specifications 21
10. Pneumatic Circuit 24
11. Exhaust Characteristics,Flow Characteristics,
And Time required to reach the specified vacuum 25
11.1. Exhaust Characteristics 25
11.2. Flow Characteristics 26
11.3. Time required to reach the specified vacuum 26
12. Handling Precautions 27
13. Trouble shooting 28

Multistage Ejector/ZL3,ZL6 Series
Safety Instructions

These safety instructions are intended to prevent hazardous situations and/or equipment damage. These instructions indicate the level of potential hazard with the labels of "Caution", "Warning" or "Danger". They are all important notes for safety and must be followed in addition to International Standards (ISO/IEC)*1) and other safety regulations.

*1) ISO 4414: Pneumatic fluid power -- General rules relating to systems
ISO 4413: Hydraulic fluid power -- General rules relating to systems
IEC 60204-1: Safety of machinery -- Electrical equipment of machines.(Part 1: General requirements)
ISO 10218: Manipulating industrial robots-Safety.
etc.

⚠ **Caution**	CAUTION indicates a hazard with a low level of risk which, if not avoided, could result in minor or moderate injury.
⚠ **Warning**	WARNING indicates a hazard with a medium level of risk which, if not avoided, could result in death or serious injury.
⚠ **Danger**	Danger indicates a hazard with a high level of risk which, if not avoided, could result in death or serious injury.

⚠ Warning

1. The compatibility of the product is the responsibility of the person who designs the equipment or decides its specifications.

Since the product specified here is used under various operating conditions, its compatibility with specific equipment must be decided by the person who designs the equipment or decides its specifications based on necessary analysis and test results.

The expected performance and safety assurance of the equipment will be the responsibility of the person who has determined its compatibility with the product.

This person should also continuously review all specifications of the product referring to its latest catalog information, with a view to giving due consideration to any possibility of equipment failure when configuring the equipment.

2. Only personnel with appropriate training should operate machinery and equipment.

The product specified here may become unsafe if handled incorrectly.

The assembly, operation and maintenance of machines or equipment including our products must be performed by an operator who is appropriately trained and experienced.

3) Do not service or attempt to remove product and machinery/equipment until safety is confirmed.

1.The inspection and maintenance of machinery/equipment should only be performed after measures to prevent falling or runaway of the driven objects have been confirmed.
2. When the product is to be removed, confirm that the safety measures as mentioned above are implemented and the power from any appropriate source is cut, and read and understand the specific product precautions of all relevant products carefully.
3. Before machinery/equipment is restarted, take measures to prevent unexpected operation and malfunction.

4. Contact SMC beforehand and take special consideration of safety measures if the product is to be used in any of the following conditions.

1. Conditions and environments outside of the given specifications, or use outdoors or in a place exposed to direct sunlight.
2. Installation on equipment in conjunction with atomic energy, railways, air navigation, space, shipping, vehicles, military, medical treatment, combustion and recreation, or equipment in contact with food and beverages, emergency stop circuits, clutch and brake circuits in press applications, safety equipment or other applications unsuitable for the standard specifications described in the product catalog.
3. An application which could have negative effects on people, property, or animals requiring special safety analysis.
4. Use in an interlock circuit, which requires the provision of double interlock for possible failure by using a mechanical protective function, and periodical checks to confirm proper operation. Inspect the product periodically to confirm proper operation.

Multistage Ejector/ZL3,ZL6 Series
Safety Instructions

⚠Caution

The product is provided for use in manufacturing industries.
The product herein described is basically provided for peaceful use in manufacturing industries.
If considering using the product in other industries, consult SMC beforehand and exchange specifications or a contract if necessary.
If anything is unclear, contact your nearest sales branch.

Limited Warranty and Disclaimer/ Compliance Requirements

The product used is subject to the following “Limited warranty and Disclaimer” and “Compliance Requirements”.
Read and accept them before using the product.

Limited Warranty and Disclaimer

1. The warranty period of the product is 1 year in service or 1.5 years after the product is delivered, whichever is first.*3) *
Also, the product may have specified durability, running distance or replacement parts. Please consult your nearest sales branch.

2. For any failure or damage reported within the warranty period which is clearly our responsibility, a replacement product or necessary parts will be provided.
This limited warranty applies only to our product independently, and not to any other damage incurred due to the failure of the product.

3. Prior to using SMC products, please read and understand the warranty terms and disclaimers noted in the specified catalog for the particular products.

***3) Vacuum pads are excluded from this 1 year warranty.**
A vacuum pad is a consumable part, so it is warranted for a year after it is delivered.
Also, even within the warranty period, the wear of a product due to the use of the vacuum pad or failure due to the deterioration of rubber material are not covered by the limited warranty.

Compliance Requirements

1. The use of SMC products with production equipment for the manufacture of weapons of mass destruction(WMD) or any other weapon is strictly prohibited.
2. The exports of SMC products or technology from one country to another are governed by the relevant security laws and regulation of the countries involved in the transaction. Prior to the shipment of a SMC product to another country, assure that all local rules governing that export are known and followed.

⚠ Caution

SMC products are not intended for use as instruments for legal metrology.
Measurement instruments that SMC manufactures of sells have not been qualified by type approval tests relevant to the metrology (measurement) laws of each country.
Therefore, SMC products cannot be used for business or certification ordained by the metrology (measurement) laws of each country.

Safety Instructions

⚠Warning	
Disassembly prohibited	■Do not disassemble, modify (including the replacement of board) or repair other than instructed in this manual. Otherwise, an injury or failure can result.
Do not	Do not operate the product outside of the specifications. Do not use the product with flammable or harmful fluids. Fire, malfunction, or damage to the product may result. Check the specifications before use.
Do not	Do not use in an atmosphere containing flammable or explosive gases. Fire or an explosion may result. This product is not explosion-protected.
Do not	■Do not use the product in a place where static electricity is a problem. Otherwise failure or malfunction of the system can result.
Do not	■Do not cut off the power and compressed air supplied to this product while it is operating. Otherwise it can cause injury due to dropping of workpieces or damage to the system.
Instruction	■If using the product in an interlocking circuit - Provide a double interlocking system, for example a mechanical system. - Check the product regularly for proper operation. Otherwise malfunction can result, causing an accident.
Instruction	■The following instructions must be followed during maintenance - Turn off the power supply - Stop the air supply, exhaust the residual pressure in piping and verify that the air is released before performing maintenance work. Otherwise an injury can result.
Do not touch	■ Do not touch the terminals and connectors while the power is on. Otherwise electric shock, malfunction and damage to the product can result.
Instruction	■ Perform sufficient trial run. Otherwise, injury or damage to the system can result due to suction failure depending on the conditions of the suction of the workpiece or the pressure switch settings. Perform sufficient verification before using this product.
Instruction	■After maintenance is complete, perform appropriate functional inspections and leak test. Stop operation if the equipment does not function properly or there is leakage of fluid. If there is leakage from parts other than the piping, the product might be broken. Cut off the power supply and stop the fluid supply. Do not supply fluid if there is leakage. Safety cannot be assured in the case of an unexpected malfunction.

1.How to Order

Without valve	ZL	3	M	06	□						–	E	A	M	G	- □
With valve	ZL	3	M	06	□	–	K1	5	LO	Z	□	–	E	A	M	G - □
Pressure switch with energy saving function	ZL	3	M	06	□	–	K1	5	LO	Z	□	–	V	A	M	W - □
		1)	2)	3)	4)		5)	6)	7)	8)	9)		10)	11)	12)	13) 14)

1) Max. suction flow

3	300L/min(ANR)
6	600L/min(ANR)

2) Standard supply pressure

M	0.35MPa
H	0.50MPa

4) Exhaust specifications

Nil	Exhaust through silencer
P	Port exhaust *2

*2: Port thread type is the same as the thread type selected for 3).

3) Supply (P), vacuum (V) port / one-touch fitting port size

	Vacuum (V) port	Supply (P) port
06	Rc3/4	8(mm)
04	2xRc1/2	
F06	G3/4*1	
F04	2xG1/2*1	
N06	NPT3/4	5/16(inch)
N04	2xNPT1/2	

*1: The thread shape complies with the G thread standard (JIS B 0202). Other shapes do not comply with ISO1603 or ISO1179.

5) Combination of the supply valve and the release valve

K1	Supply valve (N.C.) + Release valve (N.C.)
K2	Supply valve (N.C.)
B1	Supply valve (N.O.) + Release valve (N.C.)
B2	Supply valve (N.O.)

6) Rated voltage

5	DC24V

7) Electrical entry

L	L shaped plug connector	Lead wire length 0.3(m)
LO		Without connectors
M	M plug connector	Lead wire length 0.3(m)
MO		Without connectors

8) Light/surge voltage suppressor

Z	Light/surge voltage suppressor

9) Manual override

Nil	Non-locking push type
D	Push-turn locking slotted type
E	Push-turn locking (manual type)

10) Vacuum pressure sensing part

Nil	—
GN	Vacuum pressure sensing port (G)
G	Pressure gauge
E	Vacuum pressure switch (Vacuum 2 outputs)
F	Vacuum pressure switch (Compound 2 outputs)
V	Pressure switch with energy saving function (Compound 1 output)

11) Output specification

A	NPN open collector
B	PNP open collector

12) Units specification

Nil	With unit conversion function
M	Fixed to SI unit (kPa)
P	With unit conversion function [Initial value PSI]

13) Electrical entry

Nil	Without lead with connector
G	Lead wire with connector (Length 2m)
W	Lead wire for energy saving switch (2m)

14) Option

Nil	Without options
B	Adapter assembly for bottom porting

*7 : Adapter assembly for adapting to the bottom porting thread pitch (27mm) of the existing ZL212 series. Necessary when replacing the existing ZL212 which is mounted to the bottom. (2Pcs/set, with 4 bolts) Mounting holes on the side is compatible without optional parts.

2. Names of Parts of Product

2.1 Names of Parts of Product

Without valve

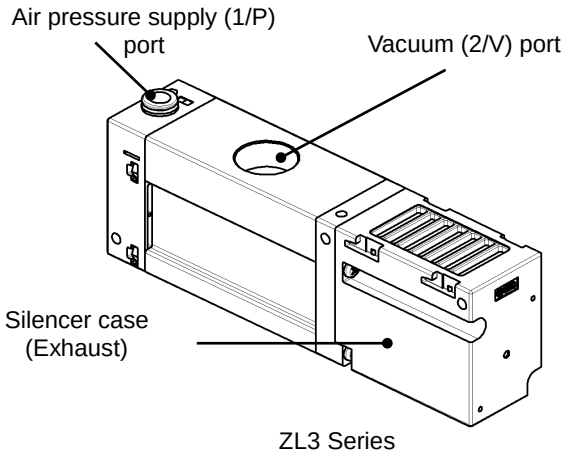

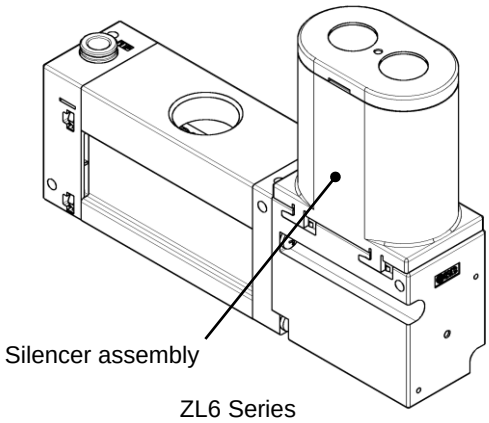

Port exhaust

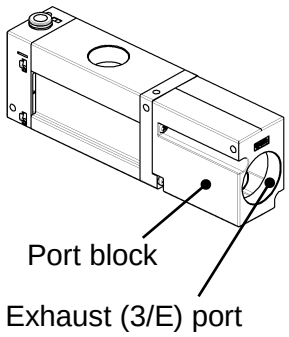

With vacuum pressure switch

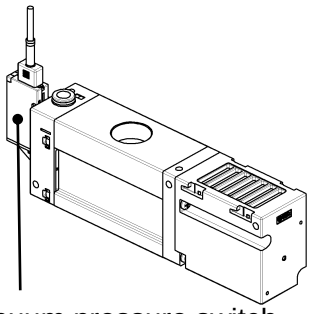

With pressure gauge

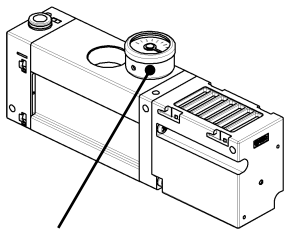

Vacuum pressure sensing port

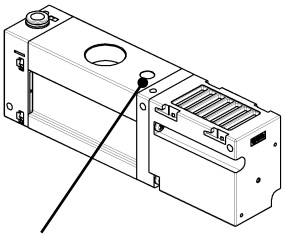

Branch type

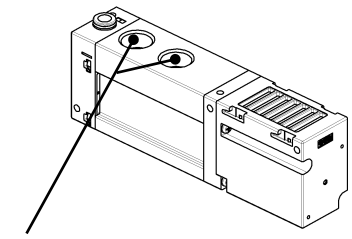

With supply valve/release valve, pressures switch

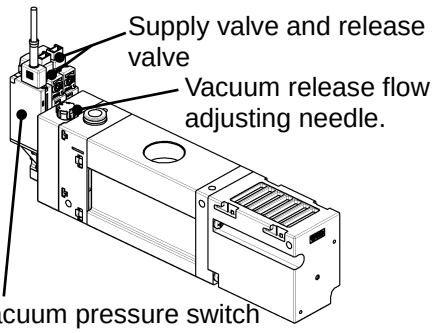

2.2 ZL6 Series Silencer assembly Replacement

1) The silencer assembly of the ZL6 series is not assembled when the product is shipped. It is necessary to assemble the silencer assembly before use.
2) Insert the silencer assembly hook to the groove of the product and insert it in arrowed direction until it clicks.

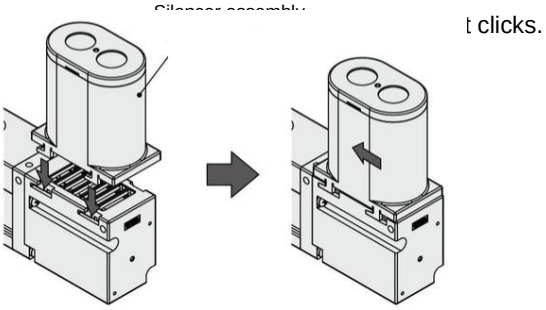

3. Mounting and Installation

3.1 Installation

3.11. Direct mounting

1) Fix the product by mounting it on the top, side or bottom surface.
2) Keep to the recommended tightening torque.

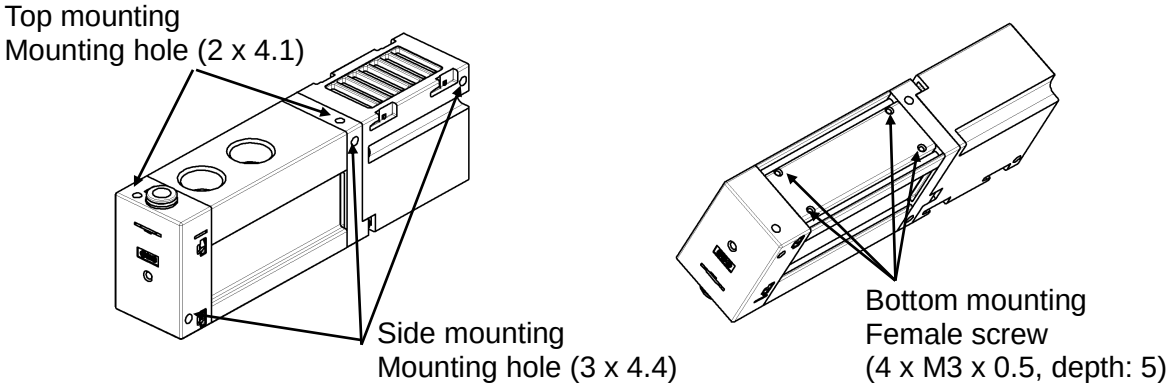

Recommended tightening torque
Top and side mounting: 0.56 to 0.76[Nm], bottom mounting: 0.29 to 0.31[Nm]

3.1.2 Mounting compatibility with the existing ZL212 series

1) Although this product is compatible with the ZL212, multistage ejector (existing product), bottom mounting adapter assembly (ZL3-AD3-A) is required for the bottom mounting.
Top mounting is not available for the ZL212 series, existing multistage ejector.
2) When mounting the bottom mounting adapter assembly, mount the adapter to the surface as shown below.

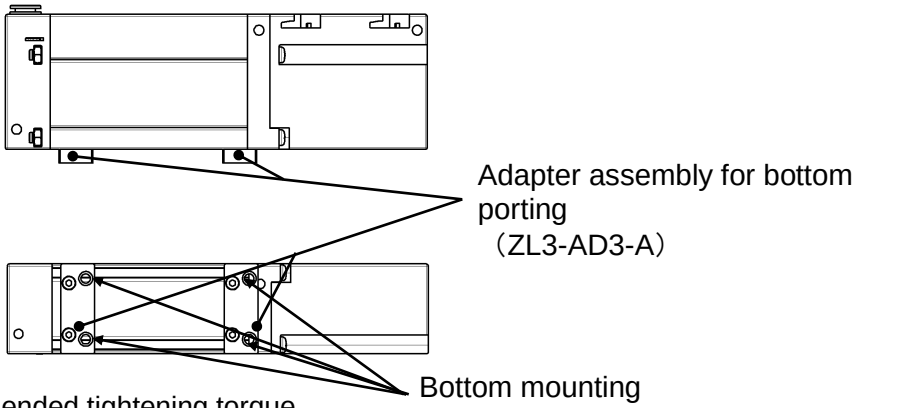

Recommended tightening torque
Bottom mounting: 1.3 to 1.5[Nm]

3.1.3 Precautions

1) When installing the product, allow sufficient space for maintenance and inspection.
2) Tightening torque exceeding the recommended value may damage the product and mounting screws. Insufficient torque can cause displacement of the body from its proper position and the looseness of the mounting screws.
3) Do not drop, hit or apply excessive shock to the product. The internal parts, solenoid valve and pressure switch may get damaged and malfunction.

3.2 Operating environment

1) Do not use in an atmosphere where corrosive gases, chemicals, sea water, water or water steam is present. These may cause failure or malfunction.
2) Do not use the product in an environment where the product may be splashed by oil or chemicals. If the product is to be used in an environment containing oils or chemicals such as coolant or cleaning solvent, even for a short time, the pressure switch may be adversely affected (damage, malfunction, or hardening of the lead wires).
3) The suction filter is not included in the product. Malfunction may occur by contamination into the product such as dust contained in the surrounding environment. It is recommended to use SMC's vacuum filter (AFJ series) in order to avoid problems.
4) Do not use in a location where surges are generated. When there are machines or equipment that generate large surge near the pressure switch (magnetic type lifter, high frequency inductive furnace, motor, etc.), this can result in deterioration and damage of the internal elements. Take measures against the surge sources, and prevent the lines from coming into close contact.
5) Do not use a load which generates surge voltage. When a surge-generating load such as a relay or solenoid is directly driven, use the product with built in surge protection.
6) The product is CE marked, but not immune to lightning strikes, so take measures against lightning strikes. Be aware of excessive surrounding noise. The product is CE marked, but settings may change if excessive noise is applied.
7) Do not install this product in a location subject to vibration and impact. Otherwise it can cause damage or malfunction.
8) Do not let foreign matter, such as wire debris, get inside the product. In order to avoid failure and malfunction, do not let foreign matter, such as wire debris, get inside the product.
9) Do not use the product in an environment that is exposed to cyclic temperature patterns. Heat cycles other than ordinary changes in temperature can adversely affect the internal components of the product.
10) Do not expose the product to direct sunlight. If using in a location directly exposed to sunlight, protect the product from the sunlight. Otherwise it can cause damage or malfunction.
11) Keep within the operating fluid temperature and ambient temperature range. Operation under low temperature may lead to damage or operation failure due to frozen moisture in the fluid or air. Protection against freezing is necessary. Mounting of an air dryer is recommended for elimination of drainage and water. Avoid abrupt temperature changes even within the specified temperature range.
12) Do not use in a location where the product is exposed to radiant heat from surrounding heat sources. Otherwise malfunction can result.

3.3. Air supply

3.3.1 Air quality

1) Using compressed air which contains chemicals, synthetic oils containing organic solvents, salts or corrosive gases, etc. can cause damage or malfunction. Do not use with fluid or in an environment which contains harmful impurities.

2) If the compressed air contains excessive drainage or carbon powder, it can stick to the vacuum generating part (the nozzle diffuser) or inside of the solenoid valve or the pressure switch for vacuum and cause deterioration of the performance or operation failure.

3) It is recommended to use supply air which purity class is 2:6:3 of ISO08573-1:2010（JIS B8392-1:2012）. Supply air containing foreign matter, water, oil or condensate, etc. can cause malfunction of supply valve or release valve. Install an air filter or mist separator to the upper stream to prevent condensate from entering to the product and perform maintenance periodically to control the supply air properly.

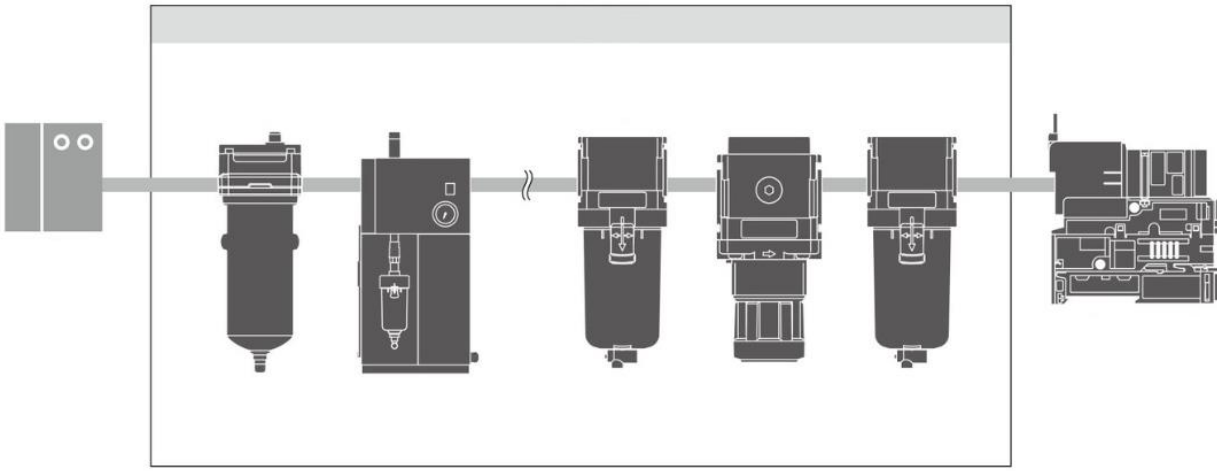

※Air quality class based on ISO8573-1:2010 (JIS B8392-1:2012)

2 : 6 : 3

● Solid particles

Class	Maximum particle count per m^3 for particle diameter d(μm)		
	0.1 < d ≦ 0.5	0.5 < d ≦ 1.0	1.0 < d ≦ 5.0
1	≦ 20,000	≦ 400	≦ 10
2	≦ 400,000	≦ 6,000	≦ 100
3	Not specified	≦ 90,000	≦ 1,000
4	Not specified	Not specified	≦ 10,000
5	Not specified	Not specified	≦ 100,000

● Moisture

Class	Pressure dew point(℃)
1	≦ -70
2	≦ -40
3	≦ -20
4	≦ +3
5	≦ +7
6	≦ +10

Adhesion of oil

Class	Oil concentration (mg/m^3)
1	≦ 0.01
2	≦ 0.1
3	≦ 1
4	≦ 5

3.3.2 Air pressure

1) Operation with a pressure exceeding the maximum operating pressure leads to breakage of the product.

3.4. Piping

3.4.1 Port size

Port size. Refer to How to Order for details (page 5).

A

Symbol	Vacuum (2/V) port	Exhaust (3/E) port	Pressure sensing port (G)	Supply (1/P) port
06	Rc3/4	Rc1	Rc1/8	One-touch fitting Applicable tube diameter 8(㎜)
04	Rc 1/2			
F06	G3/4	G1	G1/8	
F04	G1/2			
N06	NPT3/4	NPT1	NPT1/8	One-touch fitting Applicable tube diameter 5/16(inch)
N04	NPT1/2			

3.4.2 Piping to ports

1) When piping to a vacuum port or pressure detection port, the body made of aluminium alloy should be fixed. Refer to the table below for the tightening torque.

2) When piping to the exhaust port, fix the port block. Refer to the table below for the tightening torque.

3) When installing piping or a tube fitting into a port, prevent cutting chips and sealant material from getting inside the product. If a sealant tape is used, leave 1 thread exposed at the end of threads.

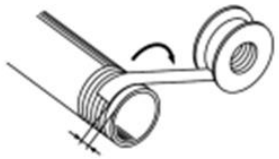

Leave one thread

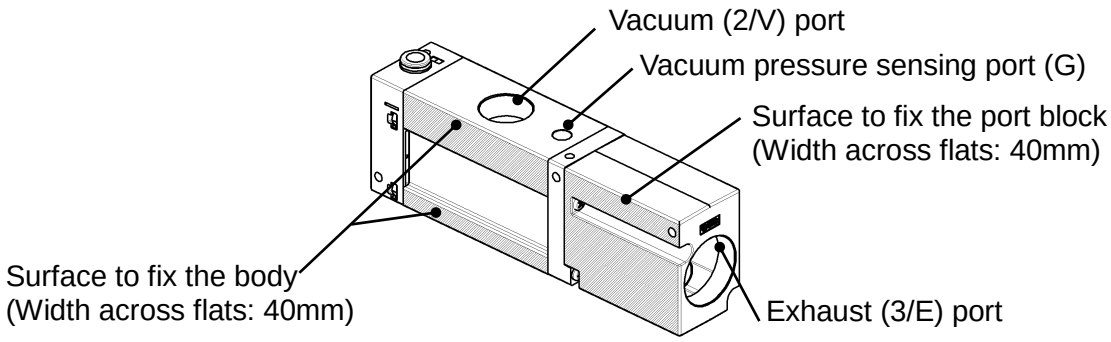

Port type	Thread size	Recommended tightening torque (Nm)
Pressure sensing port (G)	Rc1/8,G1/8,NPT1/8	3-5
Vacuum (2/V) port	Rc1/2,G1/2,NPT1/2	28 to 30
	Rc3/4,G3/4,NPT3/4	28 to 30
Exhaust (3/E) port	Rc1,G1,NPT1	36～38

3.4.3 Application and operating pressure range of each port

Port symbols	Description	Application	Operating pressure range
1/P	Air pressure supply port	Compressed air supply for operating vacuum ejector	0.2 to 0.6MPa
2/V	Vacuum port	Adsorption equipment including suction cup	—
3/E	Exhaust port	Exhaust when the vacuum ejector operates Note 1)	—
G	Pressure sensing port	Connect the pressure sensing equipment	—

3.4.4 Air supply port (1/P) (one-touch fitting)

Tube attachment

1) Take a tube having no flaws on its periphery and cut it off at right angles. When cutting the tube, use tube cutters. If cutting is done with tools other than tube cutters, the tube may be cut diagonally or become flattened, etc., making a secure installation impossible, and causing problems such as the tube pulling out after installation or air leakage. Also, allow a sufficient margin of tube length.
2) Hold the tube and push it in slowly, inserting it completely into the fitting.
3) After inserting the tubing, pull on it gently to confirm it is secure. Incorrect insertion may cause air leakage or release of the tubing.
4) Prevent the connected tube from being rotated. The fitting may be damaged.

Removal of the tube

1) Press the release button evenly and firmly.
2) Hold down the release button while pulling out the tube. If the release button is not held down sufficiently, the tubing cannot be withdrawn.
3) If the removed tubing is to be used again, cut off the section that has been secured in the fitting. Re-using this portion of the tube can cause problems such as air leakage or difficulty in removing the tube.

Other manufacturer's tube

When using other than SMC brand tube, confirm that the following specifications are satisfied with respect to the tube outside diameter tolerance.

1) Nylon tube Within +/-0.1mm
2) Soft nylon tube Within +/-0.1mm
3) Soft polyurethane tube Within +0.15mm or -0.2mm

Do not use tubing which does not meet these outside diameter tolerances. Connection to the fitting may fail, causing disconnection of the tube and air leakage.

3.4.5 Precautions for the air tube

(1) Allow a sufficient margin of tube length when piping, in order to prevent twisting, tensile, moment loads, vibration or impact being applied to the tubes. This will cause damage to the fittings and will crush, burst or release tubing.
2) Piping to the product is assumed to be static piping. If the tube moves, it may become worn, elongated or torn due to tensile forces, or disconnected from the fitting. Ensure the tube is in a static condition at all times before using.
3) Do not lift the product by holding the piping after the tube is connected. This may lead to damage of the filter case of One-touch fitting.
4) Before piping is connected, flush the lines thoroughly with air or wash to remove chips, cutting oil and other debris from inside the pipe. Otherwise it can cause damage or malfunction.
5) When connecting tubing, consider factors such as changes in the tubing length due to pressure, and allow a sufficient margin. Failure to do so may result in fitting breakage or detachment of the tubing.
Refer to Fittings & Tubing Precautions from 1 to 4 shown in Best Pneumatics 6 on SMC's website (URL) for the recommended piping conditions.

3.5 Wiring

3.5.1 Precautions for Wiring

1) Do not pull the lead wire for the solenoid valve or pressure switch forcefully or lift the product by the lead wire. Otherwise damage to the solenoid valve or internal parts can result, causing malfunction or causing the connector to come out. Refer to the table below for the lead wire tensile force.

Table Lead wire tensile force

Lead wire type	Tensile force
Lead wire with connector for solenoid valve	(30N or less)
Lead wire with connector for vacuum pressure switch	(35N or less)
Lead wire with connector for energy saving vacuum switch	(20N or less)

2) Avoid repeatedly bending or stretching the lead wires, or placing a heavy load or applying force to them. Repetitive bending stress or tensile stress can cause the sheath of the wire to peel off.
If the lead wire can move, secure it near the body of the product.
The recommended bend radius of the lead wire is 6 times the outside diameter of the sheath, or 33 times the outside diameter of the insulation material, whichever is larger.
Replace the damaged lead wire with a new one.
3) Wire correctly. Incorrect wiring can cause malfunction or breakage of the solenoid valve or pressure switch.
4) Do not perform wiring while the power is on. The internal parts of the solenoid valve or pressure switch may get damaged and malfunction.
5) Do not route wires and cables together with power or high voltage cables. Route the wires of the product separately from power or high voltage cables in order to avoid noise or surge entering the signal line from the power or high voltage line.
6) Verify the insulation of wiring. Poor insulation (interference with other circuits, poor insulation between terminals etc.) can apply excessive voltage or current to the pressure switch, causing damage.
7) Design the product to prevent reverse current when the circuit is open or the product is forced to operate for operational checks. Depending on the circuit used, insulation may not be maintained when operation is forced, allowing reverse current to flow, which can cause malfunction and damage to the solenoid valve and pressure switch.
8) Keep wiring as short as possible to prevent interference from electromagnetic noise and surge voltage. Do not use a cable longer than 10m. Wire the DC (-) line as close as possible to the power supply.

4. Solenoid valve

4.1 Manual override

There are 3 types of manual override operation. Push the manual override with a screwdriver until it reaches the end. Confirm that the product operates safely before the operation of the manual override.

Manual override operation type

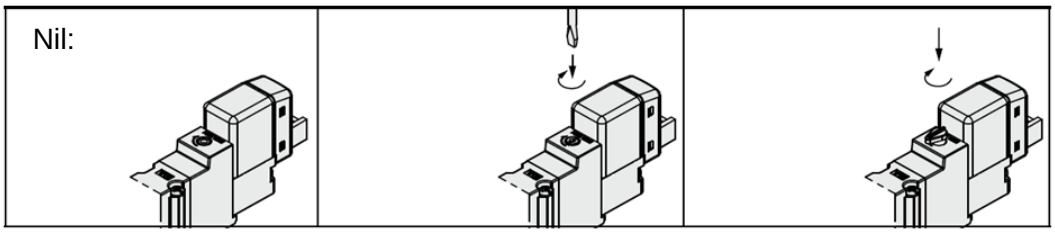

4.2. Wiring

To install the connector, hold the cover and insert the connector straight pushing the connector lever with your finger. Ensure that the connector lever clip is properly inserted into the groove of the cover. To remove the connector, hold the solenoid valve and pull out the connector straight pushing the connector lever clip.

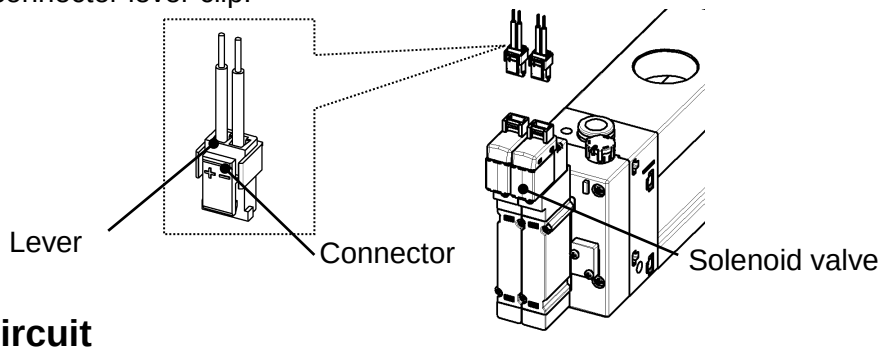

4.3 Internal circuit

Connect correctly the lead wires to +(positive) and –(negative) indications. When the lead wires are already connected, red wire is (+) and black wire is (-). With light/surge voltage suppressor The valve installed onto the product has polarity.

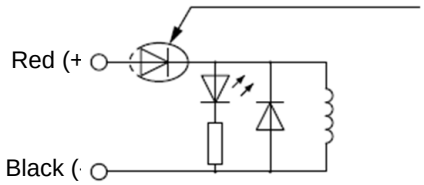

4.4 Initial state

When the valve assembly is delivered, the supply valve is on the OFF position, but it may be on the ON position due to the vibration or impact during transportation or device installation. Move supply valve to OFF position manually or energizing before use.

4.5. Precautions

1) The specified voltage must be used. Otherwise failure, malfunction or short life can result.
2) If a valve is energized for an extended period of time without a break, the rise in temperature due to heat-up of the coil may cause a decline in solenoid valve performance, reduce service life, or have adverse effects on peripheral equipment. The solenoid valve should not be energized continuously for longer than 10 minutes, and the energizing time in one day should be shorter than the non-energizing time.

5. Vacuum pressure switch

5.1 Internal Circuit and Wiring Examples

5.2.1 Vacuum pressure switch

NPN (2 output)

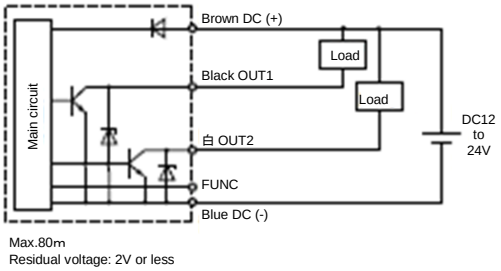

PNP (2 output)

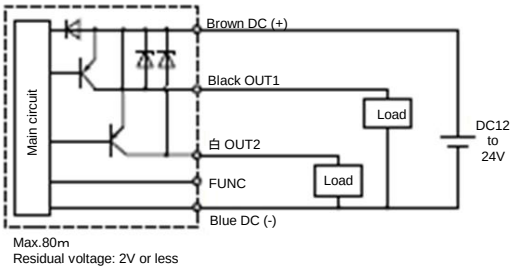

*The FUNC terminal is connected when using the copy function.
*Refer to the Operation Manual for details on setting the ZSE/ISE10.

5.2.2 Pressure switch for vacuum with energy saving function

NPN (1 output)

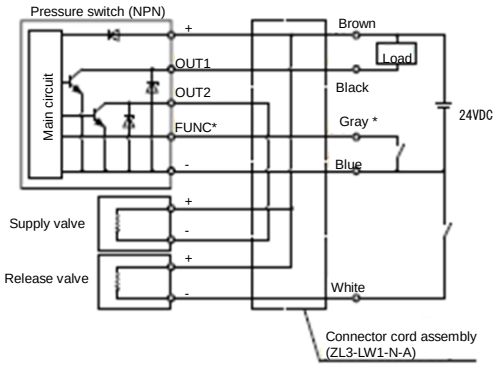

PNP (1 output)

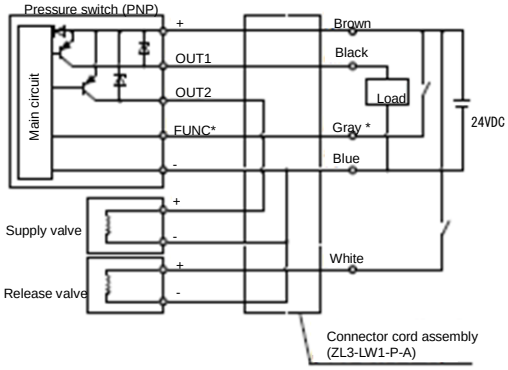

*FUNC terminal is for energy saving operation of the supply valve.
*Refer to the Operation Manual for details on setting the ZSE10 (for ZL3, ZL6 series).

5.2. Handling / adjustment Precautions

1) The specified voltage must be used. Otherwise failure, malfunction or short life can result.
2) Connect a load before turning the power supply on. If the power supply is turned on with no load connected to the pressure switch, over current may occur, causing the product to break instantly.
3) Do not short circuit the load. An error is displayed when the load of the pressure switch is short circuited, but over current may flow, causing damage to the pressure switch.
4) Do not press the setting buttons with a sharp pointed object. This may damage the setting buttons.
5) If using the product to detect very small pressures, warm up the product for 10 to 15 minutes first. There will be a drift on the display of approximately 1% for 10 minutes after the power supply is turned on.
6) Perform settings suitable for the operating conditions. Incorrect setting can cause operation failure. For settings, refer to the Operation Manual of the pressure switch.
7) Do not touch the LED during operation. The display can vary due to static electricity.
8) If a commercially available switching power supply is used, be sure to ground the frame ground (FG) terminal.

6. Vacuum release flow adjusting needle

6.1. Vacuum release flow adjusting method

Vacuum release air is output by turning the release valve ON. The flow rate of vacuum release air can be adjusted by adjusting the vacuum release flow adjustment needle.
For the adjustment of the vacuum release flow, pull the push-lock handle for unlocking.
Clockwise rotation of the push-lock handle → vacuum release flow decreases.

A

Counterclockwise rotation → vacuum release flow increases.

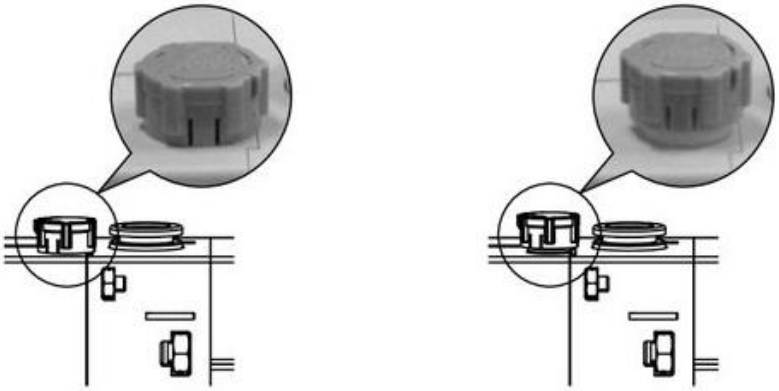

6.2. Precaut

1)Leakage cannot be completely eliminated when the needle is fully closed. A certain amount of leakage is allowed in the products specifications. Tightening the needle to achieve zero leakage may result in equipment damage.
2) Make sure that the push-lock handle is locked. Lock the handle by pushing it down and confirm that it is locked. It should not be possible to rotate it.
3)If the push-lock handle is pulled with force for unlocking, it may break. Do not pull the handle with excessive force.
4) The retaining mechanism works when the vacuum release flow adjustment needle makes 12 revolutions from the completely closed state, and it is not possible to turn any more. The needle may break if it is rotated more than 12 revolutions.
5) Do not use tools such as pliers to tighten the handle. This can result in breakage due to over torquing.

7. Structural Drawing and Replacement of Part

7.1. Construction

ZL3
Valve and pressure switch are not included.
Silencer exhaust type.

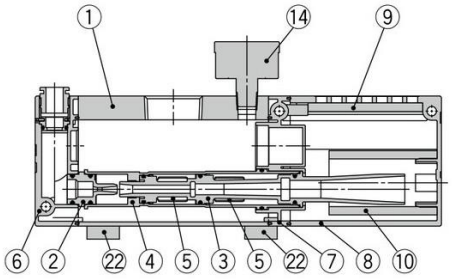

ZL3
Valve and pressure switch are included.Port exhaust type.

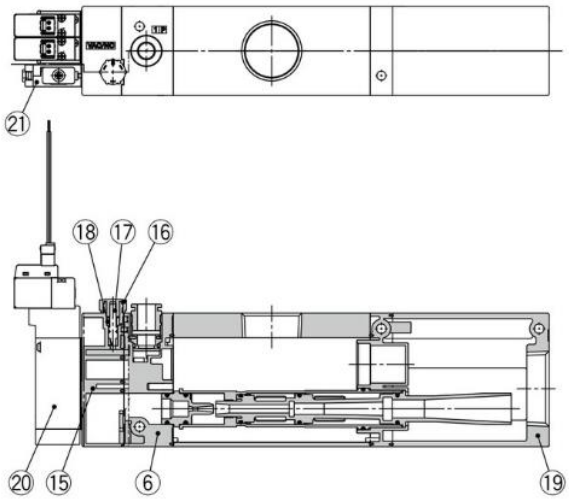

ZL6
Valve and pressure switch are not included.
Silencer exhaust type.

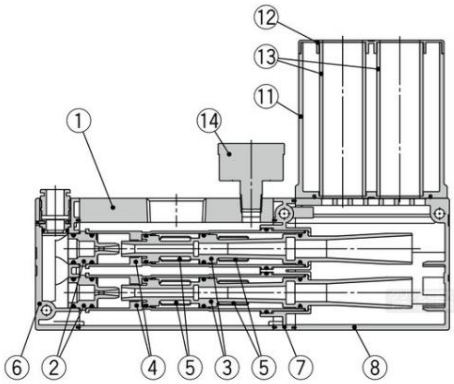

ZL6
Valve and pressure switch are included.Port exhaust type.

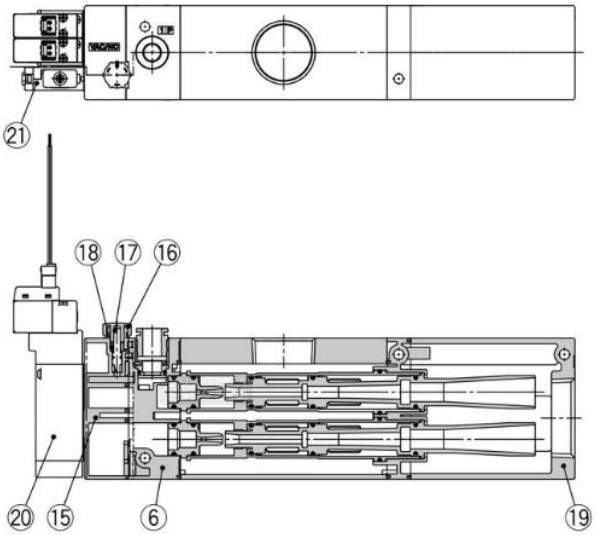

Components

No.	Description	Material	Notes
1	Body	Aluminum alloy (Anodized)	-
2	Nozzle	POM	Refer to Replacement Part 2.
3	Diffuser	PBT	
4	Attachment	POM	
5	Check valve	FKM	
6	Front adapter	PBT	-
7	End adapter	PBT	-
8	Silencer case 1	PBT	Refer to Replacement Part 3.
9	Sound absorbing material 1	Resin	Refer to Replacement Part 4.
10	Sound absorbing material 2	Non-woven fabric	
11	Silencer case 2	PBT	Refer to Replacement Part 5.
12	Silencer cap	POM	
13	Sound absorbing material 3	Non-woven fabric	Not replaceable by single unit

No.	Description	Material	Notes
14	Pressure gauge	-	Refer to Replacement Part 7.
15	Valve plate	PBT	-
16	Handle	POM	-
17	Needle	PBT	-
18	Needle guide	Brass (Electroless nickel plating)	-
19	Port block	Aluminum alloy (Chromated, coating)	Refer to Replacement Part 6.
20	Supply valve and release valve	-	Refer to Replacement Part 1.
21	Vacuum pressure switch	-	-
22	Adapter assembly for bottom mounting.	Brass (Electroless nickel plating)	Refer to Replacement Part 8.
-	Sealing material (O-ring)	HNBR/NBR	-
-	Mounting screws	Steel (Trivalent chromated)	-

7.2 How to Order Replacement Parts

1 Solenoid valve (supply valve/ vacuum release valve) assembly (common for ZL3/ZL6)

ZL3-JSY3140-5L Z -

1) 2) 3)

Rated voltage 24 VDC

With light/surge voltage suppressor

1) Electrical entry

L	LO	M	MO
With lead wire (Length: 300mm)	Without connectors	With lead wire (Length: 300mm)	Without connectors

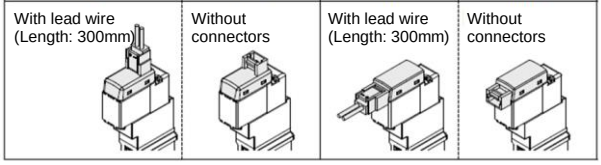

2) Manual override

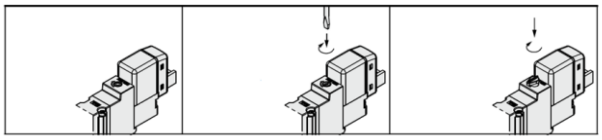

3) Supply valve and release valve

Nil	Supply valve
X12	Release valve

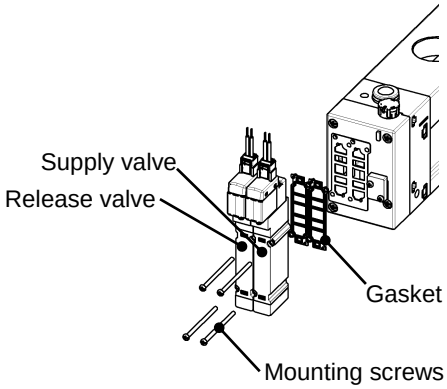

* Mounting screw recommended tightening torque is 0.15 to 0.18Nm.

Solenoid valve assembly component

Description	Components	Notes
Solenoid valve assembly	Solenoid valve	1pc./set
	Gasket	1pc./set
	Connector with lead wire	Not included in the type LO and MO (see 1) Electrical entry)
	Mounting screw	2pcs./set

Lead wire assembly with the connector for supply valve/ release valve

SY100-30-4A-

1) 2)

1) Power supply

	Rated voltage
4	24 VDC

2) Lead wire length

Nil	300 ㎜
6	600 ㎜
10	1000 ㎜
15	1500 ㎜
20	2000 ㎜
25	2500 ㎜
30	3000 ㎜
50	5000 ㎜

Lead wire assembly with the connector for the supply valve / release valve

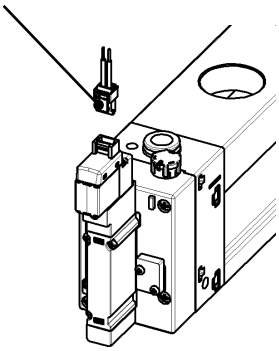

Supply valve/ Release valve connector socket (common for ZL3 / ZL6)

SY100-30-A

* Connector, socket(2pcs.)

Assembly with lead wire with connector for vacuum pressure switch (common for ZL3 / ZL6)

Assembly with lead wire with connector for vacuum pressure switch

ZS-39-5G

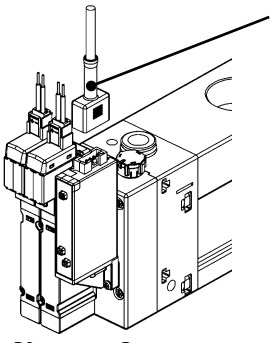

Lead wire assembly with connector for er

ZL3-LW1-N-A
1)

1) Rated voltage

N	NPN open collector
P	PNP open collector

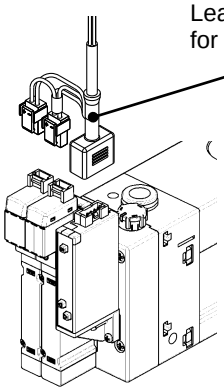

Vacuum pressure switch is not replaceable
Care should be taken.

2Ejector assembly (common for ZL3/ZL6)

ZL3-EJ1-H-□-A
1) 2)

1) Standard supply pressure

M	0.35MPa
H	0.50 MPa

2)1st. ejector Check valve

Nil	—
V	Yes

* Pressure switch with energy saving function req
1st ejector check valve.

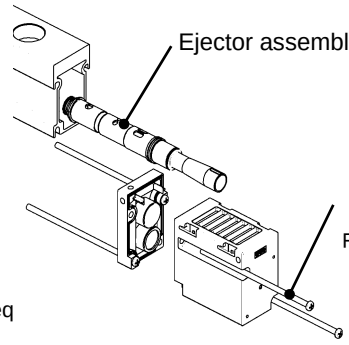

3 Silencer assembly (for ZL3)
ZL3-SC1-A

4Sound absorbing material assembly (for ZL3)
ZL3-SE1-A

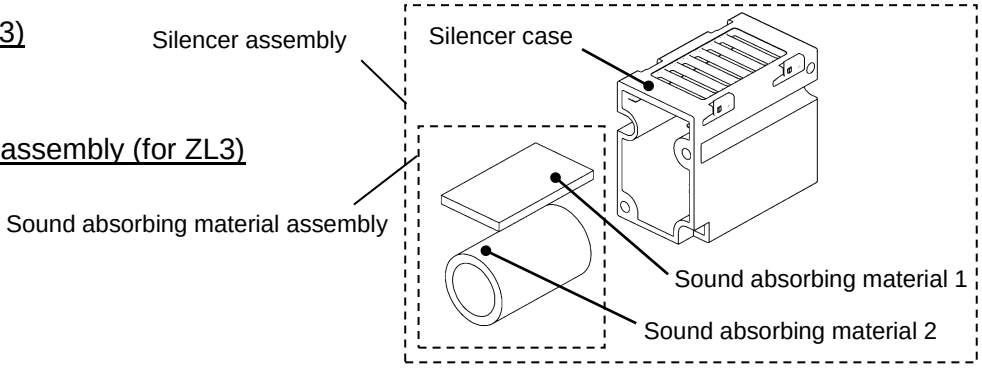

5 Silencer assembly (for ZL6)

ZL6-SC1-A

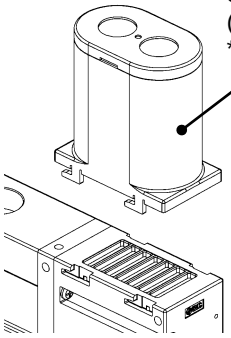

6 Port block assembly (common for ZL3/ZL6)

ZL3-EP1-1□-A
1)

1) Thread type

Nil	Rc
F	G
N	NPT

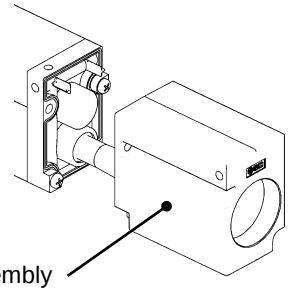

7 Pressure gauge (common for ZL3/ZL6)

GZ33-K1K-01-X56
(Displayed in kPa)

GZ33-K1K-01-X56
(Displayed in inHg/psi)*

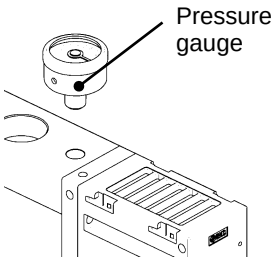

* The inHg/psi type is not for use in Japan due to a new measurement law.

8 Adapter assembly for bottom mounting (for ZL3)

ZL3-AD3-A

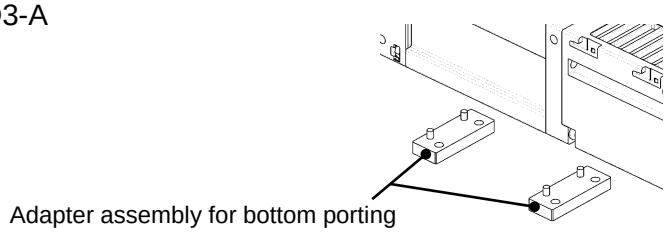

8. Maintenance

Check and perform the following maintenance in order to use the ejector and the vacuum system and in an appropriate way.

8.1 How to replace the Silencer (ZL3)

1) Loosen the mounting screws (2pcs.) of the silencer assembly to remove the silencer case (Fig. 1).
2) Replace the sound absorbing material in the silencer case (Fig. 2).
3) Assemble the silencer assembly with the mounting screws. Recommended tightening torque: 0.76 to 0.84Nm

A

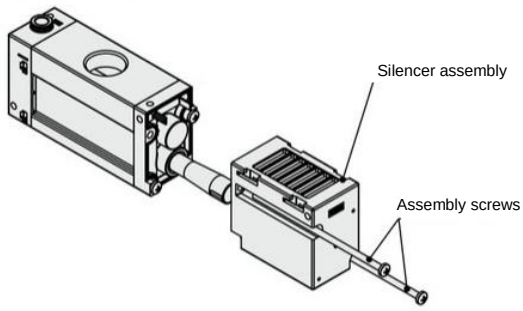

Fig.1

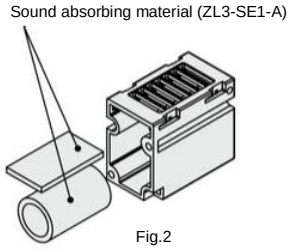

Fig.2

8.2 Silencer Assembly Replacement Procedure (ZL6)

Refer to the ZL6 Series Silencer Assembly Replacement (page 6).

8.3. Precautions

1) Maintenance should be performed according to the procedure indicated in the Operation Manual. Incorrect handling can cause damage of equipment and device, and operation failure.
2) During maintenance, compressed air can be dangerous when handled incorrectly. The assembly, handling, repair and element replacement of pneumatic systems should be performed by a knowledgeable and experienced person.
3) Remove drainage from air filters and mist separator regularly. If the collected drainage is drained to the downstream side, it can stick inside of the product, causing operation failure and failure to reach the specified vacuum pressure. If the drain bowl is difficult to check and remove, the installation of a drain bowl with an auto drain option is recommended.
4) Replace the sound absorbing material in the ejector regularly. It is recommended to replace the filter element and the silencer when the pressure drop reaches 5kPa as a guideline. The replacement cycle varies depending on the operating conditions, operating environment and supply air quality. However, if there is a vacuum pressure drop and/or delay in the vacuum (adsorption) response time which causes problem with the settings during operation, stop the operation of the product and replace the silencing element regardless of the above mentioned replacement guideline.
5) When the product is to be removed, turn off the power supply, and be sure to cut off the supply pressure and exhaust the compressed air. Confirm that the air is released to atmosphere. When mounting the product after the maintenance work, supply compressed air, connect to the power, check if it functions properly and have a leakage inspection.
6) Do not disassemble or modify the product, other than the replacement parts specified in this manual.
7) Do not use solvents such as benzene, thinner etc. to clean the product. These can damage the surface of the body and erase the markings on the body. Use a soft cloth to remove stains. For heavy stains, use a damp cloth that has been soaked with diluted neutral detergent and fully squeezed, then wipe up the stains again with a dry cloth.

9. Specifications

9.1. Ejector specification

ZL3

Model No.		ZL3M	ZL3H
Nozzle diameter [mm]		1.9	1.5
Standard supply pressure [MPa]		0.35	0.50
Max. vacuum pressure [MPa]*1		-91	-93
Max. suction flow [L/min(ANR)]		280	
	Branch + Port exhaust	300*2	
Air consumption [L/min(ANR)]		150	135
Operating pressure range [MPa]		0.2 to 0.6	
Operating temperature range [°C]		-5 to 50 (No condensation or freezing)	
Fluid		Air	
Impact resistance (m/s^2) *2		20	
Impact resistance (m/s^2) *3		100	

*1: Values are based on standard of SMC measurements. They depend on atmospheric pressure (weather, altitude, etc.) and measurement method.
*2: Total value of 2 vacuum ports (2/V) of the branch port.
*3: 10 to 500Hz. 2 hours in directions of X, Y and Z respectively (not energized, initial value).
*4: 3 times in directions of X, Y and Z respectively (not energized, initial value)

ZL6

Model No.		ZL6M	ZL6H
Nozzle diameter [mm]		1.9x2	1.5x2
Standard supply pressure [MPa]	Without valve	0.35	0.50
	With valve	0.37	0.52
Max. vacuum pressure [MPa]*1		-91	-93
Max. suction flow [L/min(ANR)]		580	
	Branch + Port exhaust	600*2	
Air consumption [L/min(ANR)]		300	270
Operating pressure range [MPa]		0.2 to 0.6	
Operating temperature range [°C]		-5 to 50 (No condensation or freezing)	
Fluid		Air	
Vibration resistance (m/s^2) *2		20	
Impact resistance (m/s^2) *4		100	

*1: Values are based on standard of SMC measurements. They depend on atmospheric pressure (weather, altitude, etc.) and measurement method.
*2: Total value of 2 vacuum ports (2/V) of the branch port.
*3: 2 hours in directions of X, Y and Z respectively (not energized, initial value)
*4: 3 times in directions of X, Y and Z respectively (not energized, initial value)

9.2 Supply valve and release valve

Model No.	ZL3-JSY3140
Response time [ms] (at 0.5MPa)	27 or less *1
Minimum operation frequency [Hz]	5
Manual override	Non-locking push type Push-turn locking slotted type Push-turn locking (manual type)
Coil rated voltage [VDC]	24
Allowable voltage fluctuation	+/-10% of the rated voltage ±
Power consumption [W]	0.4

*1 According to the dynamic performance test of JIS B 8419:2010 (coil temp. 20°C, rated voltage)

9.3 Pressure gauge specifications

Model No.	GZ33-K1K-01-X56	GZ33-P1C-N01-X55
Pressure unit	kPa	Displayed in both inHg and psi
Pressure range	-100～100kPa	-30inHg～14psi
Thread	R1/8	NPT 1/8
Accuracy	Vacuum side +/-3%F.S, positive pressure side +/-5%F.S	

9.4 Weight

(g)

Model No.	ZL3	ZL6
Basic type	390	470
Port exhaust	+80	+25
Specification of vacuum switch (Lead wire is not included)	+20	
Specification of vacuum switch (Lead wire is included)	+60	
With Supply valve and release valve	+120	
Without supply valve and release valve	+80	
With pressure gauge	+30	
With adapter assembly for bottom mounting	+60	-

A

9.5 Vacuum Switch Specification

Model No.		ZSE10		
		Vacuum pressure switch	Pressure switch for compound pressure	Pressure switch for vacuum with energy saving function
Rated pressure range [kPa]		-101 to 0	-100 to 100	
Set / display pressure range [MPa]		-101 to 10	-105 to 105	
Proof pressure [kPa]		500		
Lowest configurable increment [kPa]		0.1		
Applicable fluid		Air, non-corrosive gas and non-flammable gas		
Power supply voltage: [VDC]		12 to 24 ±10%, ripple (p-p), 10% or less (with reverse connection protection)		
Current consumption[mA]		40 or less		
Switch output		NPN or PNP open collector 2 outputs (selectable)		NPN or PNP open collector OUT1：General-purpose, OUT2：Valve control
	Maximum load current [mA]	80		
	Maximum applied voltage [V]	28 (NPN output)		26.4 (NPN output)
	Residual voltage [V]	2 or less (Load current 80mA)		
	Response time [ms]	2.5 or less (response time available for anti-chattering function: 20, 100, 500, 1000 or 2000 ms)		
	Short circuit protection	Provided		
Repeatability		±0.2%F.S. ±1digit		
Hysteresis	Hysteresis mode	Adjustable (can be set from 0) *1		
	Window comparator mode	Adjustable (can be set from 0) *1		—
Display method		3 1/2 digits, 7-segment display, 1 color display (red)		
Display accuracy		+/-2%F.S. +/- 1 digit (ambient temp. 25+/-3ºC)		
Operation indicator		Turns ON when the switch is ON (OUT1: Green, OUT2: Red)		
Environmental resistance	Enclosure rating	IP40		
	Operating temperature range [ºC]	During operation: -5 to 50ºC, Storage: -10 to 60ºC (no freezing, no condensation)		
	Operating humidity range [%RH]	Operation, storage: 35 to 85ºC (no condensation or freezing)		
	Withstand voltage [VAC]	1000V AC for 1 minute between terminals and housing		
	Insulation resistance (MΩ)	50 or more between terminals and housing (with 500V DC megger)		
Temperature characteristics		±2%F.S. ±1 digit (ambient temp. -5 to 50°C)		
Lead wire		Oilproof heavy-duty vinyl cable 5 cores Conductor cross section: 0.15mm^2 Insulation outer diameter: 1.0mm		
Standards		CE marking, RoHS		

10 Pneumatic Circuit

ZL3 (without valve)

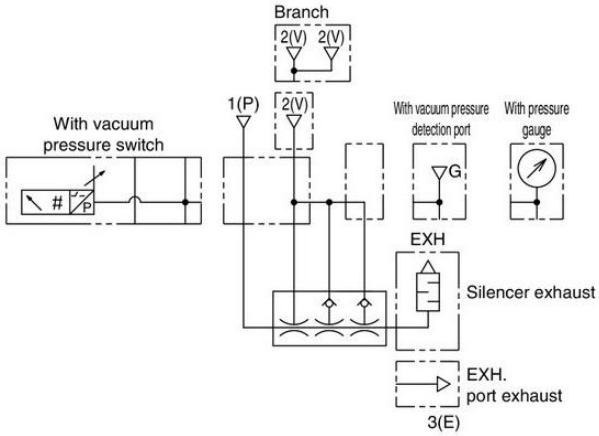

ZL3 (with valve)

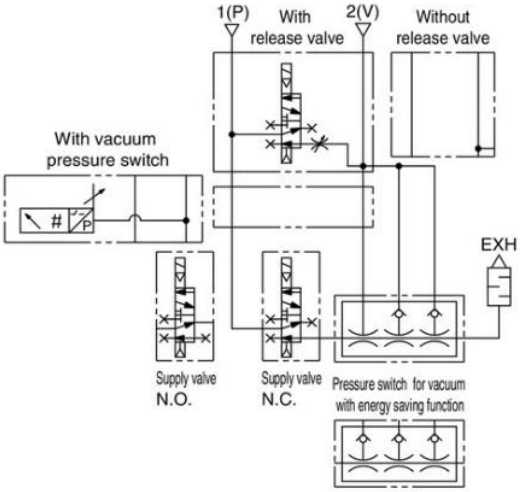

ZL6 (without valve)

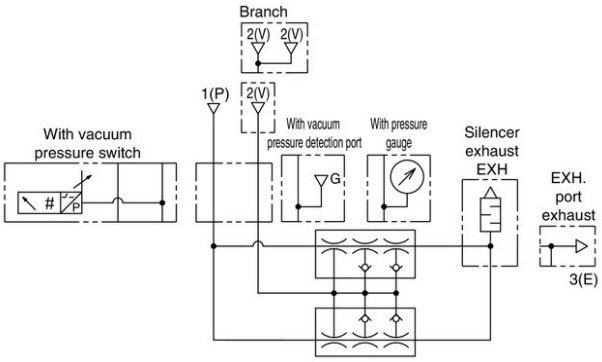

ZL6 (with valve)

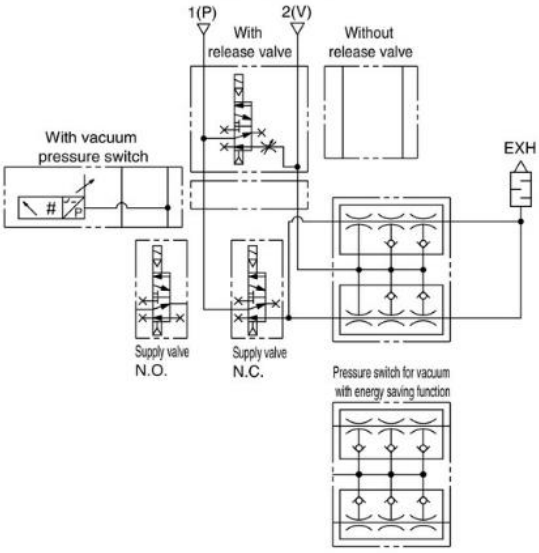

11. Exhaust Characteristics, Flow Characteristics, and Time required to reach the specified vacuum

11.1 Exhaust Characteristics (representative values)

ZL3H

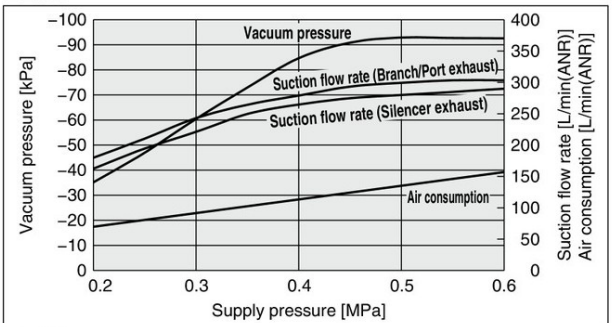

ZL3M

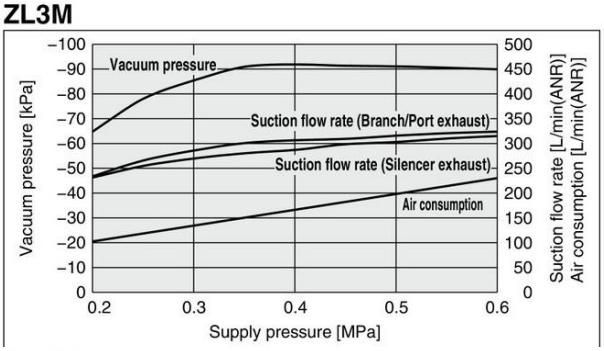

ZL6H

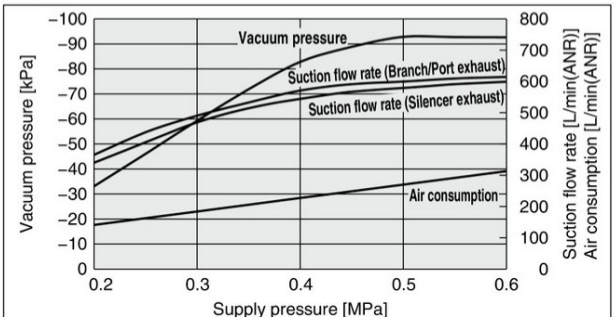

ZL6M

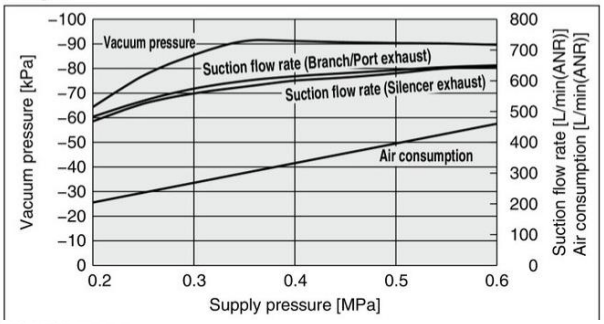

ZL6H (With valve)

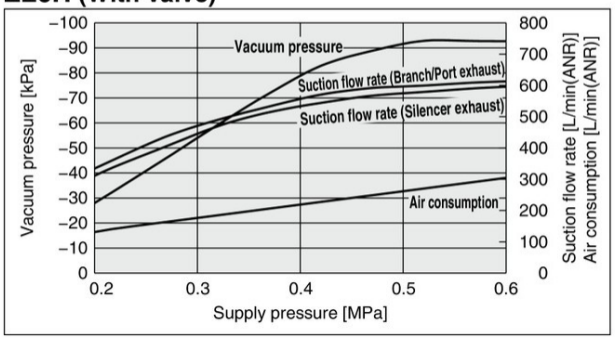

ZL6M (With valve)

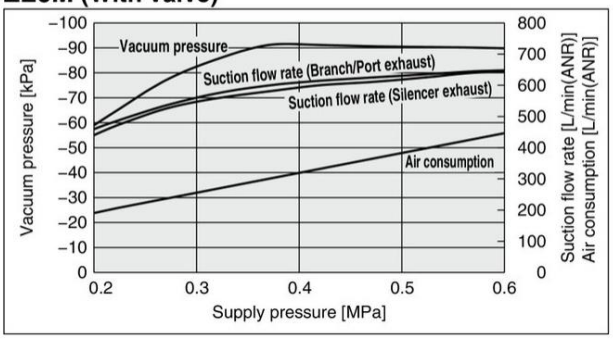

11.2 Flow characteristics (representative values)

ZL3H (04P) Supply pressure: 0.5 MPa

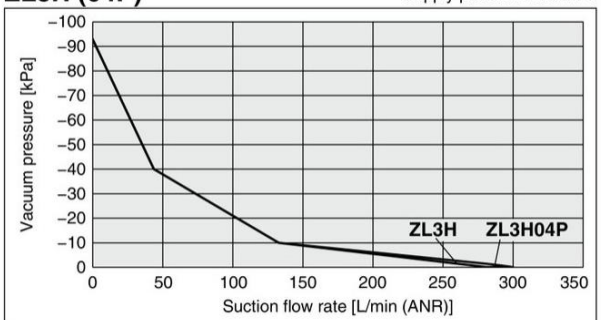

ZL3M (04P) Supply pressure: 0.35 MPa

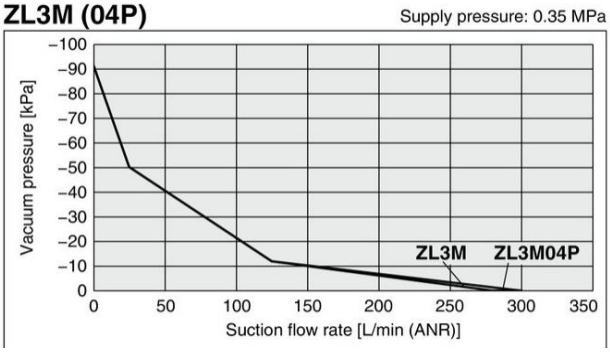

ZL6H (04P) Supply pressure: 0.5 MPa/0.52 MPa (With valve)

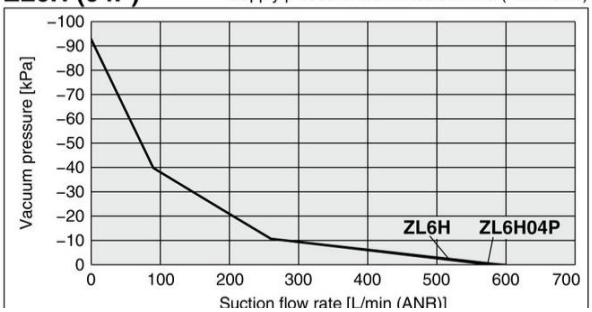

ZL6M (04P) Supply pressure: 0.35 MPa/0.37 MPa (With valve)

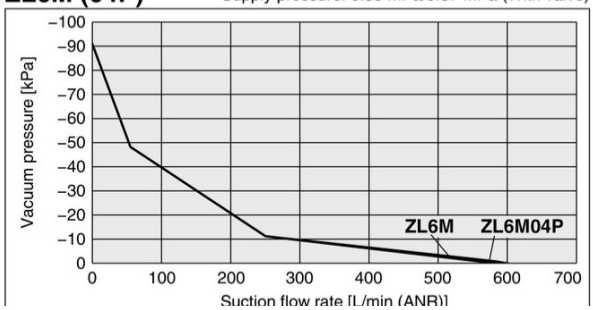

How to Read the Flow Rate Characteristics

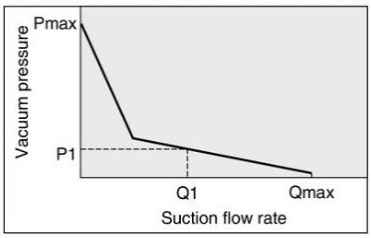

The flow rate characteristics indicate the relationship between the vacuum pressure and the suction flow rate of the ejector. They also show that when the suction flow rate changes, the vacuum pressure also changes. In general, this indicates the relationship at the ejector's standard operating pressure.

In the graph, Pmax indicates the max. vacuum pressure, and Qmax indicates the max. suction flow rate. These are the values that are published as specifications in catalogs, etc. Changes in vacuum pressure are explained below.

1. If the ejector's suction port is closed and sealed tight, the suction flow rate becomes "0," and the vacuum pressure increases to the max. (Pmax).
2. If the suction port is opened and air is allowed to flow (the air leaks), the suction flow rate increases, and the vacuum pressure decreases. (The condition of P1 and Q1)
3. If the suction port is opened completely, the suction flow rate increases to the max. (Qmax), while the vacuum pressure then drops almost to "0" (atmospheric pressure). When adsorbing workpieces which are permeable, subject to leakage, etc., caution is required as the vacuum pressure will not be very high.

How to Read the Time to Reach Vacuum

The graphs indicate the time required to reach a vacuum pressure determined by adsorption conditions for workpieces, etc., starting from atmospheric pressure in a 1 L sealed tank. For the ZL3H, approximately 4.0 seconds are necessary to attain a vacuum pressure of –90 kPa.

11.3 Time required to reach the specified vacuum (representative value)

ZL3□ (Tank capacity: 1 L)

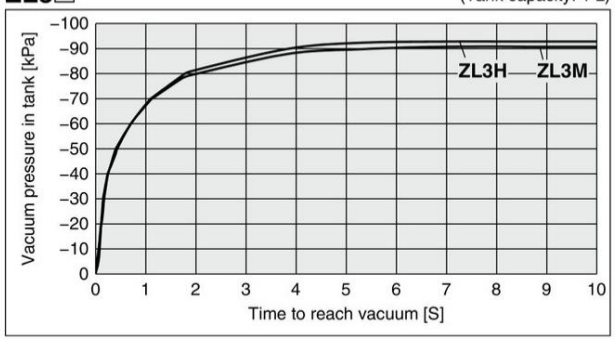

ZL6□ (Tank capacity: 1 L)

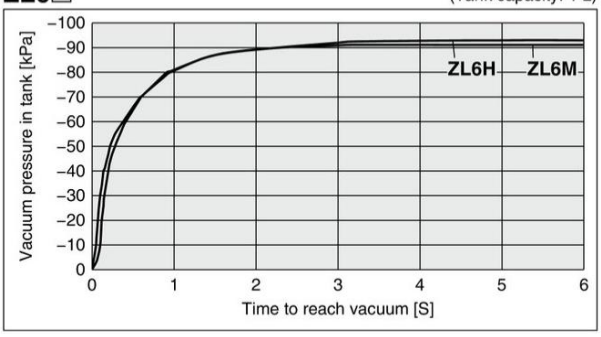

12. Handling Precautions

12.1. Exhaust from the Ejector

The exhaust resistance should be as small as possible to obtain the full ejector performance. There should be no shield around the exhaust port for the silencer exhaust specification. Sound absorbing material is gradually clogged in the following cases.

- Suction of dust in the environment at the time of adsorption, or
- When the air is not cleaned enough.

Clogging causes the ejector's exhaust resistance, decreasing suction flow and vacuum pressure. (Regular replacement of the sound absorbing material is recommended).

For the port exhaust type, exhaust resistance occurs depending on the piping size and length.

12.2. Exhaust Noise from Ejector

When vacuum ejector generates vacuum, noise can be heard from the exhaust port when the standard supply pressure is close to the pressure that generates peak vacuum pressure making vacuum pressure unstable.

If the vacuum pressure range is adequate for adsorption, there should not be a problem. If the noise causes a problem or affects the setting of the pressure switch, change the supply pressure slightly to avoid the pressure range of the noise.

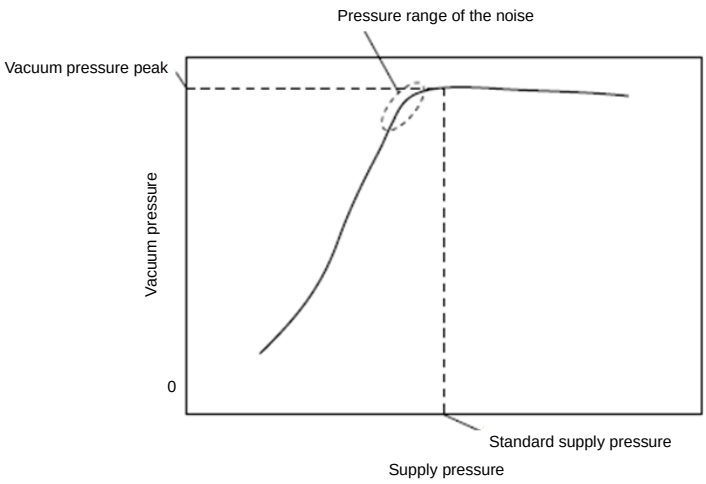

13. Troubleshooting

When any failure occurs to the product, perform the following trouble shooting.

Failure phenomenon		Possible causes		Countermeasure No.
Vacuum absorption failure	Vacuum is not generated	Supply valve does not operate	Decline in the power supply voltage	1)
			Electrical wire failure	2)、3)
			The supply pressure exceeds the operating pressure range.	4)
	Vacuum pressure decreased	Clogging by foreign matter or particles		5), 6)
		Clogging of the vacuum filter		6)
		Clogging of the sound absorbing material.		5), 6)
		Deterioration of the adsorbing part (pad) and air leakage due to wearing.		7)
		Incorrect assembly during maintenance (incorrect mounting of the gasket or O-ring)		8)
		Insufficient supply pressure		9)
		Supply valve and release valve operate simultaneously		10)
		Sealing failure due to the deterioration of the check valve		11)
Fluctuation of vacuum pressure	Noise is generated intermittently when air is exhausted when absorbing by vacuum and vacuum pressure slightly fluctuates.	Vibration of fluid when vacuum pressure is generated		12)
Vacuum release failure	Release air is not output	Vacuum break flow adjusting needle is fully closed.		13)
		Release valve does not operate,	Decline in the power supply voltage	1)
			Electrical wire failure	2), 3)
			The supply pressure exceeds the operating pressure range.	4)
	Workpiece is not released smoothly.	Decrease of release flow		14)
		Adhesion of the workpiece and pad		15)
		Interlocking of supply valve and release valve		10)
Operation failure of the energy saving switch.	Vacuum is not held. Supply valve chatters.	Vacuum pressure decreased		11), 16)

No	Countermeasure
1)	Adjust the rated voltage so that the supply voltage for the solenoid valve is within +/-10% of the rated voltage while the simultaneously energized equipment is ON.± When the vacuum pressure switch is wired to the common power supply, the rated voltage shall be maintained while the switch is energized.
2)	Check the correct connection of the power supply and wiring of plug connectors.
3)	The connector assembly lead wire included in the product will be broken by repeated bending. When the product is installed to the moving part, use the wiring intended for moving parts. Fix the wiring to the device so that it is not affected by vibrations.
4)	If the supply pressure is lower than the operating pressure range, it may cause operation failure of the solenoid valve. If the supply pressure is higher than the operating pressure range, it may cause operation failure because of early defect due to wear of seals. Adjust the supply pressure appropriate for the specification for each port. Ejectors consume a large amount of air during operation. Ensure that the supply pressure is within the operating range.
5)	Oil mist in the supply air or particles in the piping cause clogging if they enter into the ejector. This may cause operation failure. Blow the air piping with air to eliminate particles. It is recommended installing the mist separator and air filter for cleaner supply air. Perform regular maintenance for mist separator and filter. Refer to the product catalogue or operation manual for details of the maintenance.
6)	Substances adhere to the surface of the workpiece may enter into the ejector, causing clogging. Install an air filter in the piping of the pad and ejector against foreign matter in the suction air. Perform regular maintenance for the filter. Refer to the product catalogue or operation manual for details of the maintenance.
7)	Replace the pad. Revise the absorbing condition based on the relation between the vacuum pressure and workpiece.
8)	If the gasket or O-ring come out or get caught during maintenance, leakage of vacuum or air occurs from there. In this case, disassemble the parts and reassemble the gasket and O-ring correctly.
9)	If the supply pressure during the operation of the ejector decreases, the generated vacuum pressure decrease. Apply adequate flow rate so that the supply pressure is adequate when other air equipment operate simultaneously.
10)	Vacuum pressure and release flow decrease if the supply valve and release valve are operated simultaneously. Check the control program and wiring.
11)	In the following cases, the vacuum pressure does not increase adequately. (1) The check valve in the ejector assembly is deteriorated by long-term use. (2) Dirt adhered to the sealing surface. Replace the ejector assembly.
12)	When the ejector vacuums the workpiece, high speed air coming out of the nozzle collides into the diffuser I.D. and bounces back, generating vibration in the exhaust air. Because of this, the vacuum pressure fluctuates slightly and is not stabilized. There should be no functional problem with the ejector. The phenomenon causes noise or could be a problem for the setting of vacuum switch. The noise can be eliminated by changing the supply pressure. Adjust the pressure regulating valve for supply pressure while checking the exhaust noise and vacuum pressure until the noise disappear. Ejector may generate noise due to the increase of exhaust resistance. When the silencer becomes dirty, the replacement of the silencer element may improve the condition.
13)	Release air is not output if the vacuum break flow adjusting needle is fully closed. Adjust the needle in an appropriate position.
14)	If a suction filter is installed in the piping of vacuum side with insufficient release flow, clogging occurs in the suction filter, resulting in release air decrease. Regular maintenance is necessary.
15)	The suction cup surface contacting with the workpiece is deteriorated over the number of contact. The workpiece may not be contacted correctly if the surface is deteriorated due to the increase of the rubber viscosity. If the rubber viscosity increases, replace the suction cup.
16)	The product with energy saving switch reduces air consumption by stopping air supply by creating vacuum between the check valve and pad in the ejector while adsorbing the workpiece. When the holding vacuum decreases, the supply valve turns on at the previously set threshold to supply vacuum pressure so that the workpiece does not fall. Therefore, if the holding time is very short, highly frequent ON/OFF operation will cause phenomenon like chattering. In this case, improve the leakage or release the setting of energy saving. Contact your sales representative for release method.

Revision history

SMC Corporation
4-14-1, Sotokanda, Chiyoda-ku, Tokyo 101-0021 JAPAN
Tel: +81 3 5207 8249 Fax: +81 3 5298 5362
URL http://www.smcworld.com

Note: Specifications are subject to change without prior notice and any obligation on the part of the manufacturer.
© 2019 SMC Corporation All Rights Reserved