Doc. No.SY3000-OMJ0003-D

Operation Manual

PRODUCT NAME

Solenoid Valve

MODEL / Series / Product Number

SY3000/5000/7000/9000 Series
(Pilot Valve: V100)

SMC Corporation

Contents

Safety Instructions ---------- 2,3

Precautions on Design/Selection ---------- 4,5

Mounting ---------- 6

Piping ---------- 6

Wiring ---------- 7

UL Approved Product ---------- 7

Lubrication ---------- 7

Air Supply ---------- 7

Operating Environment ---------- 8

Maintenance ---------- 8

Specific Product Precautions ---------- 9 to 17

Construction ---------- 18 to 26

Trouble shooting ---------- 27,28

Safety Instructions

These safety instructions are intended to prevent hazardous situations and/or equipment damage. These instructions indicate the level of potential hazard with the labels of **"Caution," "Warning"** or **"Danger."** They are all important notes for safety and must be followed in addition to International Standards (ISO/IEC)*1), and other safety regulations.

*1) ISO 4414: Pneumatic fluid power - General rules and safety requirements for systems and their components
ISO 4413: Hydraulic fluid power - General rules and safety requirements for systems and their components
IEC 60204-1: Safety of machinery - Electrical equipment of machines - Part 1: General requirements
ISO 10218-1: Robots and robotic devices - Safety requirements for industrial robots - Part 1:Robots
etc.

Danger	**Danger** indicates a hazard with a high level of risk which, if not avoided, will result in death or serious injury.
Warning	**Warning** indicates a hazard with a medium level of risk which, if not avoided, could result in death or serious injury.
Caution	**Caution** indicates a hazard with a low level of risk which, if not avoided, could result in minor or moderate injury.

Warning

1. The compatibility of the product is the responsibility of the person who designs the equipment or decides its specifications.

Since the product specified here is used under various operating conditions, its compatibility with specific equipment must be decided by the person who designs the equipment or decides its specifications based on necessary analysis and test results. The expected performance and safety assurance of the equipment will be the responsibility of the person who has determined its compatibility with the product. This person should also continuously review all specifications of the product referring to its latest catalog information, with a view to giving due consideration to any possibility of equipment failure when configuring the equipment.

2. Only personnel with appropriate training should operate machinery and equipment.

The product specified here may become unsafe if handled incorrectly. The assembly, operation and maintenance of machines or equipment including our products must be performed by an operator who is appropriately trained and experienced.

3. Do not service or attempt to remove product and machinery/equipment until safety is confirmed.

1. The inspection and maintenance of machinery/equipment should only be performed after measures to prevent falling or runaway of the driven objects have been confirmed.
2. When the product is to be removed, confirm that the safety measures as mentioned above are implemented and the power from any appropriate source is cut, and read and understand the specific product precautions of all relevant products carefully.
3. Before machinery/equipment is restarted, take measures to prevent unexpected operation and malfunction.

4. SMC products cannot be used beyond their specifications. They are not developed, designed, and manufactured to be used under the following conditions or environments. Use under such conditions or environments is not allowed.

1. Conditions and environments outside of the given specifications, or use outdoors or in a place exposed to direct sunlight.
2. Use for nuclear power, railways, aviation, space equipment, ships, vehicles, military application, equipment affecting human life, body, and property, combustion equipment, entertainment equipment, emergency shut-off circuits, press clutches, brake circuits, safety equipment, etc., and use for applications that do not conform to standard specifications such as catalogs and operation manuals.
3. Use for interlock circuits, except for use with double interlock such as installing a mechanical protection function in case of failure. Please periodically inspect the product to confirm that the product is operating properly.



Safety Instructions

⚠ Caution

SMC develops, designs, and manufactures products to be used for automatic control equipment, and provides them for peaceful use in manufacturing industries.
Use in non-manufacturing industries is not allowed.
Products SMC manufactures and sells cannot be used for the purpose of transactions or certification specified in the Measurement Act of each country.
The new Measurement Act prohibits use of any unit other than SI units in Japan.

Limited warranty and Disclaimer/Compliance Requirements

The product used is subject to the following “Limited warranty and Disclaimer” and “Compliance Requirements”. Read and accept them before using the product.

Limited warranty and Disclaimer

1. The warranty period of the product is 1 year in service or 1.5 years after the product is delivered, whichever is first.[*2)]
   Also, the product may have specified durability, running distance or replacement parts. Please consult your nearest sales branch.
2. For any failure or damage reported within the warranty period which is clearly our responsibility, a replacement product or necessary parts will be provided.
   This limited warranty applies only to our product independently, and not to any other damage incurred due to the failure of the product.
3. Prior to using SMC products, please read and understand the warranty terms and disclaimers noted in the specified catalog for the particular products.

***2) Vacuum pads are excluded from this 1 year warranty.**
A vacuum pad is a consumable part, so it is warranted for a year after it is delivered.
Also, even within the warranty period, the wear of a product due to the use of the vacuum pad or failure due to the deterioration of rubber material are not covered by the limited warranty

Compliance Requirements

1. The use of SMC products with production equipment for the manufacture of weapons of mass destruction (WMD) or any other weapon is strictly prohibited.
2. The exports of SMC products or technology from one country to another are governed by the relevant security laws and regulations of the countries involved in the transaction. Prior to the shipment of a SMC product to another country, assure that all local rules governing that export are known and followed.

SY Series

Precautions for 5 Port Solenoid Valve ①

Be sure to read before handling. Refer to main text for detailed precautions on every series.

Design / Selection

⚠ Warning

1. Confirm the specification

Products represented in this catalog are designed only for use in compressed air systems (including vacuum). Do not operate at pressures, temperatures, etc., beyond the range of specifications, as this can cause damage or malfunction. (Refer to the specifications.)

We do not guarantee against any damage if the product is used outside of the specification range.

2. Actuator drive

When an actuator, such as a cylinder, is to be driven using a valve, take appropriate measures (such as the installation of a cover or the restricting of access to the product) to prevent potential danger caused by actuator operation.

3. Intermediate stops

For the 3-position closed center valve types, it is difficult to make the piston stop at the required position accurately due to the compressibility of air.

Furthermore, since valves and cylinders are not guaranteed for zero air leakage, it may not be possible to hold a stopped position for an extended period of time.

4. Effect of back pressure when using a manifold.

Use caution when valves are used on a manifold because actuators may malfunction due to back pressure.

Especially when using a 3-position exhaust center valve or a single acting cylinder, take appropriate measures to prevent malfunction by using it with an individual EXH spacer assembly, a back pressure check valve, or an individual exhaust manifold.

5. Holding pressure (including vacuum).

Since valve are subject to air leakage, they cannot be used for applications such as holding pressure (including vacuum) in a pressure vessel.

6. Not suitable for use as an emergency shutoff valve, etc.

The valves listed in this catalog are not designed for safety applications such as an emergency shutoff valve. If the valves are used in such applications, additional safety measures should be adopted.

7. Release of residual pressure

For maintenance and inspection purposes install a system for releasing residual pressure. Especially in the case of the 3-position closed center valve types, ensure that the residual pressure between the valve and the cylinder is released.

8. Operation in a vacuum condition

When a valve is used for switching a vacuum, take measures to install a suction filter or similar to prevent external dust or other foreign matter from entering inside the valve.

In addition, at the time of vacuum adsorption, be sure to supply a constant supply of vacuum. Failure to do so may result in foreign matter sticking to the adsorption pad or air leakage, causing the workpiece to drop.

9. Regarding vacuum switch valves and vacuum release valves

If a non-vacuum valve is installed in the middle of a piping system that contains a vacuum, the vacuum condition will not be maintained. Use a valve designed for use under vacuum conditions.

10. Double solenoid type

When using the double solenoid type for the first time, actuators may travel in an unexpected direction depending on the switching position of the valve. Implement measures to prevent any danger from occurring when operation the actuator.

11. Ventilation

Provide ventilation when using a valve in a confined area, such as in a closed control panel. For example, install a ventilation opening, etc. in order to prevent pressure from increasing inside of the confined area and to release the heat generated by the valve.

12. Extended periods of continuous energization

If a valve will be continuously energized for an extended period of time, the temperature of the valve will increase due to the heat generated by the coil assembly. This will likely adversely affect the performance of the valve and any nearby peripheral equipment. Therefore, if the valve is to be energized for periods of longer than 30 minutes at a time or if during the hours of operation the energized period per day is longer than the de-energized period, we advise using a valve with 0.4W or lower valve, or a valve with a power-saving circuit.

13. Do not disassemble the product of make any modifications, including additional machining.

Doing so may cause human injury and/or an accident.

14. Resumption after a long period of holding time

When resuming operation after a long period of holding time, there are cases in which, regardless of whether the product is in an ON or OFF state, there is a delay in the initial response time due to adhesion. Conducting several cycles of running-in operation will solve this problem. Please consider implementing this before resumption.

⚠ Caution

1. Momentary energization

If a double solenoid valve is operated with momentary energization, it should be energized for at least 0.1 second. However, depending on the condition of the secondary load, it should be energized until the cylinder reaches the stroke and position, since there is a possibility of malfunction.

2. Leakage voltage

Take note that the leakage voltage will increase when a resistor is used in parallel with switching element or a C-R circuit (surge voltage suppressor) is used for protecting a switching device because of the passing leakage voltage through the C-R circuit.

The suppressor residual leakage voltage should be as follows.

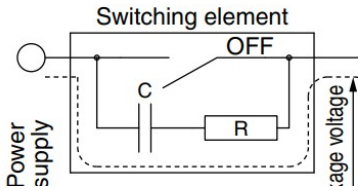

DC coil

Should be 3% or less of the rated voltage.

AC coil

Should be 8% or less of the rated voltage.

Precautions for 3/5 Port Solenoid Valve ②

Be sure to read before handling. Refer to main text for detailed precautions on every series.

Design / Selection

⚠ Caution

3. Solenoid valve drive for AC with solid state output (SSR, TRIAC output, etc.)

1) Current leakage
When using a snubber circuit (C-R element) for surge protection of the output, a very small amount of electrical current will continue to flow even during the OFF state. This results in the valve not returning. In a situation where the tolerance is exceeded, as in the above case, take measures to install a bleeder resistor.

2) Minimum allowable load amount (Min. load current)
When the consumption current of a valve is less than the output's minimum allowable load volume or the margin is small, the output may not switch normally. Please contact SMC.

3) Solenoid valve with full wave rectifier circuit
When the solenoid valve built-in full wave rectifier circuit with AC specifications is used, a return failure of the solenoid valve may occur depending on the kind of triac output circuit. Carefully check this point when selecting a SSR or sequencer. For details, contact the SSR or sequencer manufacturer.

4. Surge voltage suppressor

1) The surge voltage suppressor built into the valve is intended to protect the output contacts so that the surge generated inside valve does not adversely affect the output contacts. Therefore, if an overvoltage or overcurrent is received from an external peripheral device, the surge voltage protection element inside the valve is overloaded, causing the element to break. In the worst case, the breakage causes the electric circuit to enter short-circuit status. If energizing continues while in this state, a large current flows. This may cause secondary damage to the output circuit, external peripheral device, or valve, and may also cause a fire. So, take appropriate protective measures, such as the installation of an overcurrent protection circuit in the power supply or a drive circuit to maintain a sufficient level of safety.

2) If a surge protection circuit contains nonstandard diodes, such as Zener diodes or varistor, a residual voltage that is in proportion to the protective circuit and the rated voltage will remain. Therefore, take into consideration the surge voltage protection of the controller. In the case of diodes, the residual voltage is approximately 1V.

5. Surge voltage intrusion

With non-polar type solenoid valves, at times of sudden interruption of the loading power supply, such as emergency shutdown, surge voltage intrusion may be generated from loading equipment with a large capacity (power consumption), and the solenoid valve in a de-energized state may switch over (see Figure 1).
When installing a breaker circuit for the loading power supply, consider using a solenoid valve with polarity protection diode), or install a surge absorption diode between the larding equipment COM line and the output equipment COM line (see Figure 2).

6. Operation in a low temperature condition

It is possible to operated a valve in extreme temperature, as low as -10 ℃. Take appropriate measures to avoid freezing of drainage, moisture etc. in low temperature.

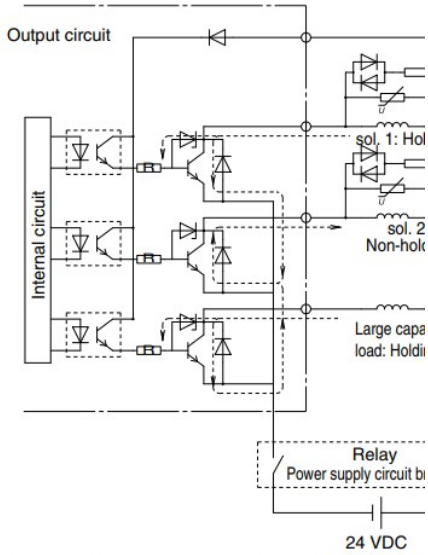

Figure 1. Surge intrusion circuit example (

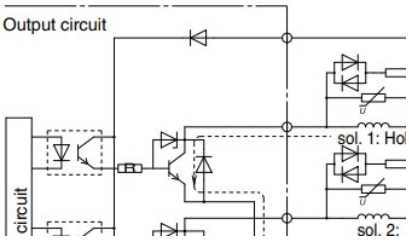

7. Operation for air blowing

When using a solenoid valve for air blowing, use an external pilot type. Use caution because the pressure drop caused by the air blowing can have an affect on the internal pilot type valve and external pilot type valves are used on the same manifold.
Additionally, when compressed air within the pressure range of the established specifications is supplied to the external pilot type valve's port, and a double solenoid valve is used for air blowing, the solenoids should normally be energized when air is being blown.

8. Mounting orientation

Mounting orientation is free.

9. Initial lubrication of main valve

Initial lubricant has already been applied to the main valve.
If you require valves for food processing machinery (NSF H-1), please refer to the HF-1 series catalog.

10. For the pilot EXH (PE) port

If the solenoid valve and the manifold's pilot EXH (PE) port is restricted extremely or blocked, abnormal operation of the solenoid valve may occur

SY Series

Precautions for 3/5 Port Solenoid Valve ③

Be sure to read before handling. Refer to main text for detailed precautions on every series.

Mounting

⚠Warning

1. Operation manual

Install the products and operate them only after reading the operation manual carefully and understanding its contents. Also, keep the manual where it can be referred to as necessary.

2. Ensure sufficient space for maintenance activities.

When installing the products, allow access for maintenance and inspection.

3. Tighten threads with the proper tightening torque.

When installing the products, follow the listed torque specifications.

4. If air leakage increases or equipment does not operated properly, stop operation.

Check mounting conditions when air and power supplies are connected. Initial function and leakage tests should be performed after installation.

5. Painting and coating

Warnings or specifications printed or affixed to the product should not be erased, removed or covered up.

Also, applying paint to resinous parts may have an adverse effect due to the solvent in the paint.

Piping

⚠Caution

1. Refer to the Fittings and Tubing Precautions for handling one-touch fittings.

2. Preparation before piping

Before piping is connected, it should be thoroughly blow out with air (flushing) or washed to remove chips, cutting oil and other debris from inside the pipe.

3. Wrapping of pipe tape

When screwing piping or fittings into ports, ensure that chips from the pipe threads or sealing material do not enter the piping. Also, if pipe tape is used, leave 1 thread ridges exposed at the end of the threads.

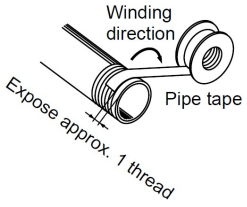

4. Closed center and double check valve types

For closed center type, check the piping to prevent air leakage from the piping between the valve and the cylinder.

5. Connection of piping and fittings

When screwing piping or fittings into the valve, tighten them as follows.

(1) When using SMC's M3, M5 fittings, follow the procedures below to tighten them.

- **Connection thread: M3**

  First, tighten by hand, then use a suitable wrench to tighten the hexagonal portion of the body an additional 1/4 turn. The reference value for the tightening torque is 0.4 to 0.5 N·m.

- **Connection thread: M5**

  First, tighten by hand, then use a suitable wrench to tighten the hexagonal portion of the body an additional 1/6 to 1/4 turn. The reference value for the tightening torque is 1 to 1.5 N·m.

※ Excessive tightening may damage the thread portion or deform the gasket and cause air leakage. Insufficient tightening may loosen the threads or cause air leakage.

- **When using a fitting other than an SMC fitting, follow the instructions given by the fitting manufacturer.**

(2) For a fitting with sealant R or NPT, first, tighten it by hand, then use a suitable wrench to tighten the hexagonal portion of the body an additional two or three turns. For the tightening torque, refer to the table below.

Connection thread size	Proper tightening torque (N·m)
1/8	3 to 5
1/4	8 to 12
3/8	15 to 20
1/2	20 to 25

(3) If the fitting is tightened with excessive torque, a large amount of sealant will seep out. Remove the excess sealant.

(4) Insufficient tightening may cause seal failure or loosen the threads.

(5) For reuse

1) Normally, fittings with a sealant can be reused up to 2 to 3 times.

2) To prevent air leakage through the sealant, remove any loose sealant stuck to the fitting by blowing air over the threaded portion.

3) If the sealant no longer provides effective sealing, wind sealing tape over the sealant before reusing. Do not use any form of sealant other than the tape type of sealant.

4) Once the fitting has been tightened, backing it out to its original position often causes the sealant to become defective. Air leakage will occur.

6. Uni thread fittings

1) First, tighten the threaded portion by hand, then use a suitable wrench to tighten the hexagonal portion of the body further at wrench tightening angle shown below. For the reference value for the tightening torque, refer to the table below.

Connection Female Thread: Rc, NPT, NPTF

Uni thread size	Wrench tightening angle after tightened by hand (deg)	Tightening torque (N·m)
1/8	30 to 60	3 to 5
1/4	30 to 60	8 to 12
3/8	15 to 45	14 to 16
1/2	15 to 30	20 to 22

Connection Female Thread: G

Uni thread size	Wrench tightening angle after tightened by hand (deg)	Tightening torque (N·m)
1/8	30 to 45	3 to 4
1/4	15 to 30	4 to 5
3/8	15 to 30	8 to 9
1/2	15 to 30	14 to 15

2) The gasket can be reused up to 6 to 10 times. It can be replaced easily when it has sustained damage. A broken gasket can be removed by holding it and then turning it in the same direction as loosening the thread. If the gasket is difficult to remove, cut it with nippers, etc. In such a case, use caution not to scratch the seat face because the seat face of the fitting's 45° gasket is the sealing face.

7. Piping to products

When piping to a product, refer to the instruction manual to avoid mistakes regarding the supply port, etc.

Precautions for 3/5 Port Solenoid Valve ④

Be sure to read before handling. Refer to main text for detailed precautions on every series.

Wiring

⚠Warning

1. The solenoid valve is an electrical product. For safety, install an appropriate fuse and circuit breaker before use.

⚠Caution

1. Polarity

When connecting power to a solenoid valve with a DC specification and equipped with a light or surge voltage suppressor, check for polarity. If there is polarity, take note of the following.

Without diode to protect polarity.

If a mistake is mode regarding the polarity, damage may occur to the diode in the valve, the switching element in a control device or power supply equipment, etc.

With diode to protect polarity.

If polarity connection is wrong, the valve does not operate.

2. Applied voltage

When electric power is connected to a solenoid valve, be careful to apply the proper voltage. Improper voltage may cause malfunction or coil damage.

3. Check the connections.

Check if the connections are correct after completing all wiring.

4. External force applied to the lead wire

If an excessive force is applied to the lead wire, this may cause faulty wiring. Take appropriate measures so that a force of 30 N or more is not applied to the lead wire.

When instructions are given in the Specific Product Precautions, follow these specifications.

UL Approved Product

⚠Caution

When conformity to UL is required, the product should be used with a UL1310 Class 2 power supply.

The product is a UL approved product only if it has a mark on the body.

Lubrication

⚠Caution

1. Lubrication

1) The valve has been lubricated for life by the manufacturer and therefore do not require lubrication while in service.

2) If a lubricant is used in the system, use class 1 (no additives) and class 2 (with additives) ISO VG32 turbine oil. For details about lubricant manufacturers' brands, refer to the SMC website.

Once a lubricant is used in the system, lubrication must be continued because the original lubricant applied during manufacturing will be washed away.

If turbine oil is used, refer to the Safety Data Sheet (SDS) of the oil.

2. Lubrication amount

The valve has been lubricated for life by the manufacturer and therefore do not require lubrication while in service.

If the lubrication amount is excessive, the oil may accumulate inside the pilot valve, causing malfunction or response delay.

So, do not apply a large amount of oil. When a large amount of oil needs to be applied, use an external pilot type to put the supply air on the pilot valve side in the non-lube state. This prevents the accumulation of oil inside the pilot valve.

Air Supply

⚠Warning

1. Type of fluids

Be sure to use compressed air for the fluid.

2. When there is a large amount of drainage.

Compressed air containing a large amount of drainage can cause malfunction of pneumatic equipment. An air dryer or water separator should be installed upstream from filters.

3. Drain flushing

If condensation in the drain bowl is not emptied on a regular basis, the bowl will overflow and allow the condensation to enter the compressed air lines. It causes malfunction of pneumatic equipment. If the drain bowl is difficult to check and remove, installation of a drain bowl with an auto drain option is recommended.

For compressed air quality, refer to the SMC Best Pneumatics catalog.

4. Use clean air

Do not use compressed air that contains chemicals, synthetic oils including organic solvents, salt or corrosive gasses, etc., as it can cause damage or malfunction.

⚠Caution

1. When low dew point air is used as the fluid, degradation of the lubrication properties inside the equipment may occur, resulting in reduced reliability (or reduced service life) of the equipment. Consider using products compatible with low dew points such as those from the 25A- series.

2. Install an air filter.

Install an air filter upstream near the valve. Select an air filter with a filtration size of 5 μm or smaller.

3. Take measures to ensure air quality, such as by installing an aftercooler, air dryer, or water separator.

Compressed air that contains a large amount of drainage can cause malfunction of pneumatic equipment such as valves. Therefore, take appropriate measures to ensure air quality, such as by providing an aftercooler, air dryer, or water separator.

4. If excessive carbon powder is seen, install a mist separator on the upstream side of the valve.

If excessive carbon dust is generated by the compressor, it may adhere to the inside of a valve and cause it to malfunction. For compressed air quality, refer to the SMC Best Pneumatics catalog.

Precautions for 3/5 Port Solenoid Valve ⑤

Be sure to read before handling. Refer to main text for detailed precautions on every series.

Operating Environment

⚠Warning

1. Do not use in an atmosphere having corrosive gases, chemicals, sea water, water, water steam, or where there is direct contact with any of these.
2. Products with IP65 enclosures (based on IEC60529) are protected against dust and water, however, these products cannot be used in water.
3. Products compliant to IP65 satisfy the specifications through mounting. Be sure to read the Precautions for each product.
4. Do not use in an environment where flammable gas or explosive gas exists. Usage may cause a fire or explosion. The products do not have an explosion proof construction.
5. Do not use in a place subject to heavy vibration and/or shock.
6. The valve should not be exposed to prolonged sunlight. Use a protective cover.
7. Remove any sources of excessive heat.
8. If it used in an environment where there is possible contact with oil, weld spatter, etc., exercise preventive measures.
9. When the solenoid valve is mounted in a control panel or its energized for a long time, make sure ambient temperatures is within the specification of the valve.

⚠Caution

1. Temperature of ambient environment

Use the valve within the range of the ambient temperature specification of each valve. In addition, pay attention when using the valve in environments where the temperature changes drastically.

2. Humidity of ambient environment

- When using the valve in environments with low humidity, take measures to prevent static.
- If the humidity rises, take measures to prevent the adhesion of water droplets on the valve.

Maintenance

⚠Warning

1. Perform maintenance inspection according to the procedures indicated in the operation manual.

If handled improperly, malfunction and damage of machinery or equipment may occur.

2. Removal of equipment, and supply/exhaust of compressed air

When components are removed, first confirm that measures are in place to prevent workpieces from dropping, run-away equipment, etc. Then, cut off the supply pressure and electric power, and exhaust all compressed air from the system using the residual pressure release function.

For 3-position closed center type, exhaust the residual pressure between the valve and the cylinder.

When the equipment is operated after remounting or replacement, first confirm that measures are in place to prevent lurching of actuators, etc. Then, confirm that the equipment is operating normally.

In particular, when a 2-position double solenoid valve is used, releasing residual pressure rapidly may cause the spool valve to malfunction, depending on the piping conditions, or the connected actuator to operate.

3. Low frequency operation

Valves should be operated at least once every 30 days to prevent malfunction. (Use caution regarding the air supply.)

4. Manual override operation

When the manual override is operated, connected equipment will be actuated.

Operate after safety is confirmed.

5. If the volume of air leakage increases or the valve does not operate normally, do not use the valve. Perform periodic maintenance on the valve to confirm the operating condition and check for any air leakage.

⚠Caution

1. Drain flushing

Remove drainage from the air filters regularly.

2. Lubrication

In the case of rubber seals, once lubrication has been started, it must be continued. Use class 1 (no additives) and class 2 (with additives) ISO VG32 turbine oil. For details about lubricant manufacturers' brands, refer to the SMC website. If other lubricant oil is used, it may cause a malfunction.

3. Manual override operation

When switching a double solenoid valve via the manual override operation, instantaneous operation may cause the malfunction of the cylinder. It is recommended that the manual override be held until the cylinder reaches the stroke end position.

Specific Product Precautions ①

Be sure to read before handling. Refer to main text for detailed precautions on every series.

Manual Override Operation

Warning

■Non-locking push style [Standard]

Press in the direction of the arrow

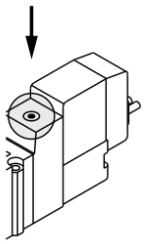

■Push-turn slottled locking type [type D]

While pressing, turn in the direction of the arrow.
If it is not turned, it can be operated the same way as the non-locking type.

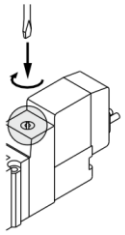

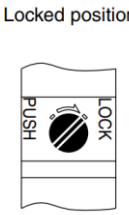

Caution

When operating the locking type D with a screw driver, turn it gently using a watchmarkers screw driver.
[Torque : Less than 0.1N·m]

■Push-turn lever locking type [type E]

While pressing, turn in the direction of the arrow.
If it is not turned, it can be operated the same way as the non-locking type.

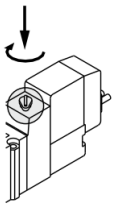

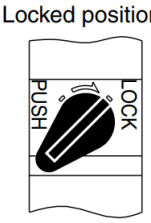

Caution

When locking the manual override on the push-turn locking types (D,E), be sure to push it down before turning.
Turning without first pushing it down can cause damage to the manual override and trouble such as air leakage, etc.

Solenoid Valve for 200, 220 VAC Specifications

Warning

Solenoid valves with grommet and L/M type plug connector AC specifications have a built-in rectifier circuit in the pilot section to operate the DC coil. With 200 V, 220 VAC specification pilot valves, this built-in rectifier generates heat when energized. The surface may become hot depending on the energized condition; therefore, do not touch the solenoid valves.

Exhaust Throttle

Caution

With the SY series, the pilot valve and main valve share a common exhaust inside the valve. Therefore, do not block the exhaust port when arranging the piping.

SY3000/5000/7000/9000 Series Used as a 3-Port Valve

Caution

In case of using a 5-port valve as a 3-port valve

The SY3000/5000/7000/9000 series can be used as normally closed (N.C.) or normally open (N.O.) 3-port port valves by closing one of the cylinder ports (A or B) with a plug. However, they should be used with the exhaust ports kept open. (Refer to pages 926 to 933 for dedicated 3-port solenoid valve.)

Plug position		B port	A port
Configuration		N.C.	N.O.
Number of solenoids	Single	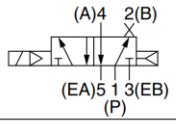	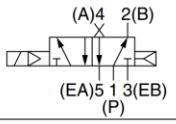
	Double	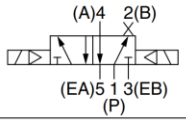	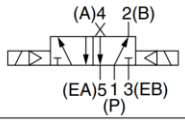

Specific Product Precautions ②

Be sure to read before handling. Refer to main text for detailed precautions on every series.

How to Use Plug Connector

⚠ Caution

1. Attaching and detaching connectors

- To attach a connector, hold the lever and connector unit between your fingers and insert straight onto the pins of the solenoid valve so that the lever's pawl is pushed into the groove and locks.
- To detach a connector, remove the pawl from the groove by pushing the lever downward with your thumb, and pull the connector straight out.

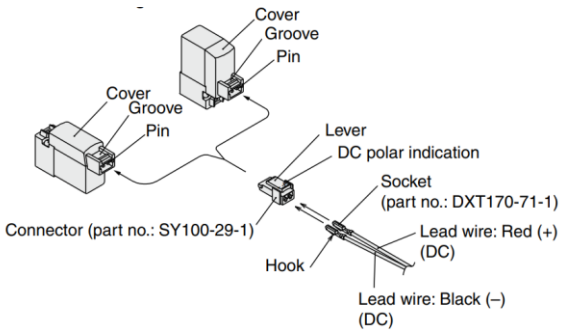

2. Crimping connection of lead wire and socket

Strip 3.2 to 3.7 mm at the end of lead wires, insert the end of the core wires evenly into the sockets, and then crimp it by a crimping tool. When this is done, take care that the coverings of the lead wires do not enter the core wire crimping area.
(Crimping tool: F1-706412 by Minebea Connect Inc.)

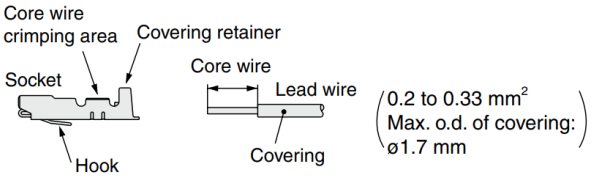

3. Attaching and detaching lead wires with sockets

- Attaching

  Insert the sockets into the square holes of the connector (+, – indication), and continue to push the sockets all the way in until they lock by hooking into the seats in the connector. (When they are pushed in, their hooks open and they are locked automatically.) Then confirm that they are locked by pulling lightly on the lead wires.
- Detaching

  To detach a socket from a connector, pull out the lead wire while pressing the socket's hook with a stick having a thin tip (approx. 1 mm). If the socket will be used again, first spread the hook outward.

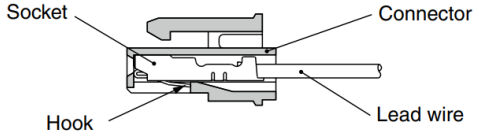

Surge Voltage Suppressor

⚠ Caution

<For DC>

Grommet, L/M Plug Connector



■ Polar type

With surge voltage suppressor (□S)

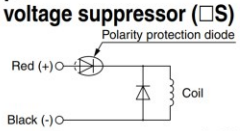

With light/surge voltage suppressor (□Z)

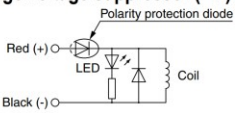



■ Non-polar type

With surge voltage suppressor (□R)

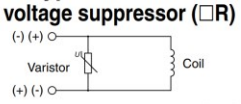

With light/surge voltage suppressor (□U)

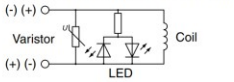

- Connect the standard type in accordance with the +, – polarity indication. (The non-polar type can be used with the connections made either way.)
- Since voltage specifications other than polar type 24 V and 12 VDC do not have diodes for polarity protection, be careful not to make errors in the polarity.
- When wiring is done at the factory, positive (+) is red and negative (–) is black.

■With power saving circuit

Power consumption is decreased by 1/4 by reducing the wattage required to hold the valve in an energized state. (Effective energizing time is over 62ms at 24 VDC.)

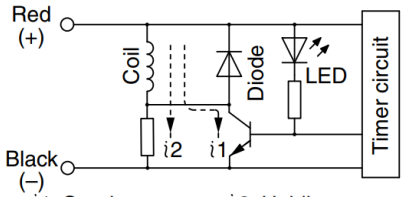

i1: Starting current i2: Holding current

Operating Principle

With the above circuit, the current consumption when holding is reduced to save energy. Please refer to the electric wave data below.

- Please be careful not to reverse the polarity, since a diode to prevent the reversed current is not provided for the power saving circuit.

(In the case of SY$^{3}_{5}$$^{5}_{7}$0T, the electric wave form of energy saving type)**

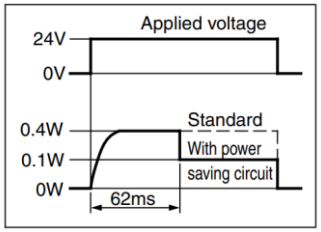

Specific Product Precautions ③

Be sure to read before handling. Refer to main text for detailed precautions on every series.

Surge Voltage Suppressor

DIN Terminal

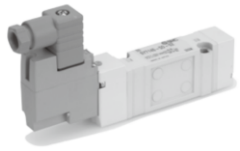

With surge voltage suppressor (DS)

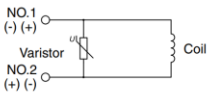

With light/surge voltage suppressor (DZ)

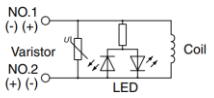

DIN terminal has no polarity.

M8 Connector

■ **Polar type**

With surge voltage suppressor (□S)

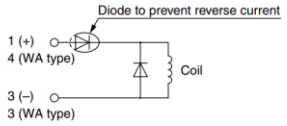

With light/surge voltage suppressor (□Z)

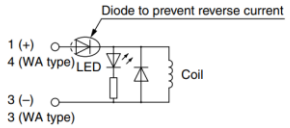

■ **Non-polar type**

With surge voltage suppressor (□R)

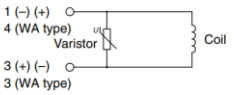

With light/surge voltage suppressor (□U)

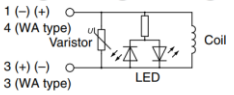

Solenoid valve side pin wiring diagram

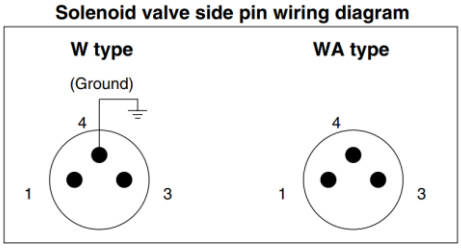

Note) The WA-type valve cannot be grounded.

- For wiring of the polar type, connect + to 1 and – to 3 for Type W, while + to 4 and – to 3 for Type WA.
- Since voltage specifications other than polar type 24 V and 12 VDC do not have diodes for polarity protection, be careful not to make errors in the polarity.

Plug-in

Circuit for non-polar (FU)

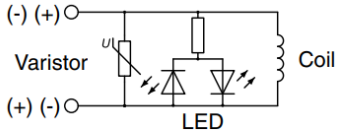

Plug-in valve has no polarity, so its possible to use for both manifold bases for positive (SS5Y$^{3}_{5}$ -45) and negative its common (SS5Y$^{3}_{5}$-45N) types.

<For AC>

(There is no “S” option, because the generation of surge voltage is prevented by a rectifier.)

Grommet, L/M Plug Connector

With light

GZ
LZ, LOZ, MZ, MOZ

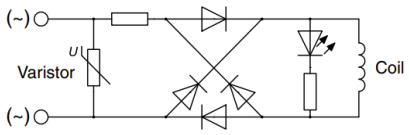

DIN Terminal

With light (DZ)
(YZ)

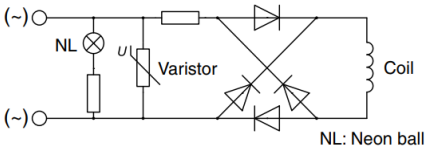

Note) Surge voltage suppressor of varistor has residual voltage corresponding to the protective element and rated voltage; therefore, protect the controller side from the surge voltage. The residual voltage of the diode is approximately 1 V.

Specific Product Precautions ④

Be sure to read before handling. Refer to main text for detailed precautions on every series.

How to Use DIN Terminal

⚠ Caution

Connection

1. Loosen the holding screw and pull the connector out of the solenoid valve terminal block.
2. After removing the holding screw, insert a flat head screwdriver, etc. into the notch on the bottom of the terminal block and pry it open, separating the terminal block and the housing.
3. Loosen the terminal screws (slotted screws) on the terminal block, insert the cores of the lead wires into the terminals according to the connection method, and fasten them securely with the terminal screws.
4. Secure the cord by fastening the gland nut.

⚠ Caution

When making connections, take note that using other than the supported size (ø3.5 to ø7) heavy duty cord will not satisfy IP65 (enclosure) standards. Also, be sure to tighten the gland nut and holding screw within their specified torque ranges.

Changing the entry direction

After separating the terminal block and housing, the cord entry can be changed by attaching the housing in the desired direction (4 directions at 90° intervals).

※ When equipped with a light, be careful not to damage the light with the cord's lead wires.

Precautions

Plug in and pull out the connector vertically without tilting to one side.

Compatible cable

Cord O.D.: ø3.5 to ø7 (Reference) 0.5mm2, 2-core or 3-core, equivalent to JIS C 3306
Type "Y"

Applicable crimped terminal

Ferrule: Weidmueller H0.5/6 (0.3 to 0.5 mm^2), or equivalent.

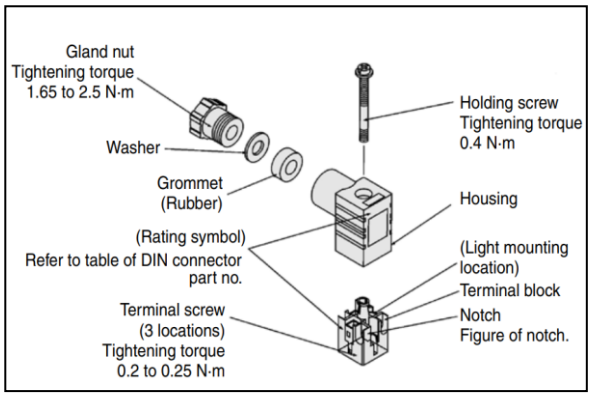

DIN connector type Y is a DIN connector that confirms to the DIN pitch 8-mm standard.

- D type DIN connector with 9.4 mm pitch between terminals is not interchangeable.
- To distinguish from the D type DIN connector, "N" is listed at the end of voltage symbol.
  (For connector parts without lights, "N" is not indicated. Please refer to the name plate to distinguish.)
- Dimensions are completely the same as D type DIN connector.
- When exchanging the pilot valve assembly only, "V115-□D" is interchangeable with "V115-□Y". Do not replace V111 (G, L, M) to V115-□D/□Y (DIN terminal), and vice versa.

SY300, SY3000 Series
How to Use DIN Terminal Connector

⚠ Caution

- SMC can provide a DIN type terminal connector (body ported type, sub-plate type) for the SY300 and SY3000 series. This cannot be assembled to a standard manifold and sub-plate since the DIN connector width (15.8mm) exceeds that of the valve body (10mm). Please also note: that bracket F1 cannot be mounted.

※The DIN terminal connector has no body ported external pilot specifications for both single unit and manifold.

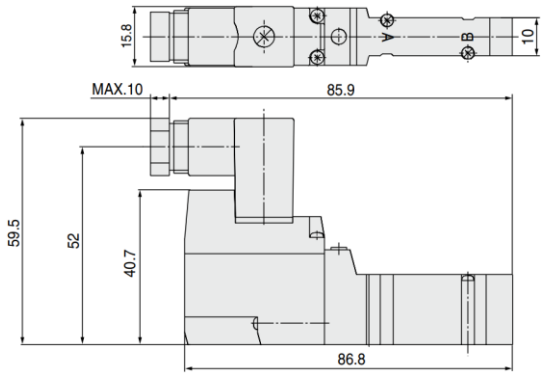

DIN Connector Part No.

⚠ Caution

<Type D>

Without light	SY100-61-1

With light

Rated voltage	Voltage symbol	Part no.
24VDC	24V	SY100-61-3-05
12VDC	12V	SY100-61-3-06
100VAC	100V	SY100-61-2-01
200VAC	200V	SY100-61-2-02
110VAC	110V	SY100-61-2-03
220VAC	220V	SY100-61-2-04

<Type Y>

Without light	SY100-82-1

With light

Rated voltage	Voltage symbol	Part no.
24VDC	24VN	SY100-82-3-05
12VDC	12VN	SY100-82-3-06
100VAC	100VN	SY100-82-2-01
200VAC	200VN	SY100-82-2-02
110VAC(115VAC)	110VN	SY100-82-2-03
220VAC(230VAC)	220VN	SY100-82-2-04

Circuit Diagram with Light

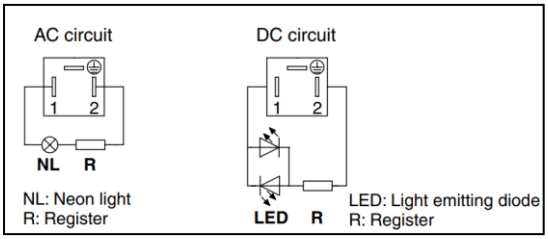

Specific Product Precautions ⑤

Be sure to read before handling. Refer to main text for detailed precautions on every series.

Connector Assembly with Cover

⚠ Caution

Connector assembly with dust proof protective cover.

- Effective to prevention of short circuit failure due to the entry of foreign matter into the connector.
- Chloroprene rubber for electrical use, which provides outstanding weather resistance and electrical insulation, is used for the cover material. However, do not allow contact with cutting oil, etc.
- Simple and unencumbered appearance by adopting roundshaped cord.

How to Order

SY100-68-A-☐

● Lead wire length (L)

Nil	300mm
6	600mm
10	1000mm
15	1500mm
20	2000mm
25	2500mm
30	3000mm
50	5000mm

Connector Assembly with Cover: Dimensions

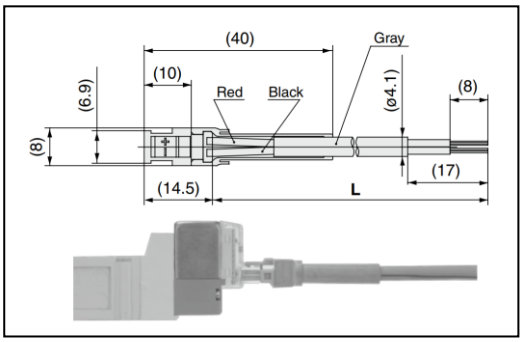

How to Order

Enter the part number for a plug connector solenoid valve without connector together with the part number for a connector assembly with cover.

<Example 1> Lead wire length of 2000 mm

SY3120-5LOZ-M5

SY100-68-A-20

<Example 2> Lead wire length of 300 mm (standard)

SY3120-5LPZ-M5

Symbol for connector assembly with cover

※ In this case, the part number for the connector assembly with cover is not required.

Plug Connector Lead Wire Length

⚠ Caution

Standard length is 300mm, but the following lengths are also available.

How to Order Connector Assembly

		Lead wire color
For DC:	**SY100-30-4A-☐**	Red, Black
For 100VAC:	**SY100-30-1A-☐**	Blue
For 200VAC:	**SY100-30-2A-☐**	Red
For other voltages of AC:	**SY100-30-3A-☐**	Gray
Without lead wire:	**SY100-30-A**	

(with connector and 2 of sockets only)

● Lead wire length

Nil	300mm
6	600mm
10	1000mm
15	1500mm
20	2000mm
25	2500mm
30	3000mm
50	5000mm

• How to Order

Specify the part numbers of the solenoid valve without connector and the connector assembly with protective cover separately.

<Example> Lead wire length 2000mm

For DC	For AC
SY3120-5LO-M5	SY3120-1LO-M5
SY100-30-4A-20	SY100-30-1A-20

Plug-in

⚠ Caution

■ When using a double solenoid valve (Dual body type: SY$^{3}_{5}$245-☐FU) on the plug-in type manifold (SS5Y$^{3}_{5}$45(N)☐), two manifold stations are required per valve. Output to A/B ports will be made through the manifold block on the side indicated by an arrow on the top of the solenoid valve. Therefore, arrange the piping on the side indicated by the arrow. Although the "T" side will not be used, plugs will not be necessary since it is sealed with the valve. (However, insert a plug into the A/B ports if dust intrusion is possible.)

Manifold valve
SS5Y$^{3}_{5}$-45(N)☐

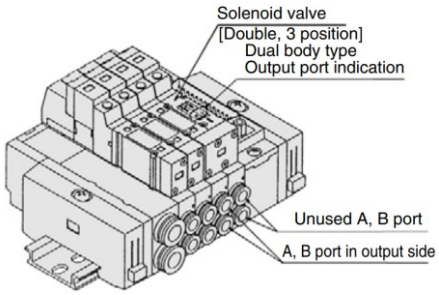

Plug-in type solenoid valves consist of a non-polar solenoid valve and a plug-in socket. When ordering them separately, refer to the following part numbers.

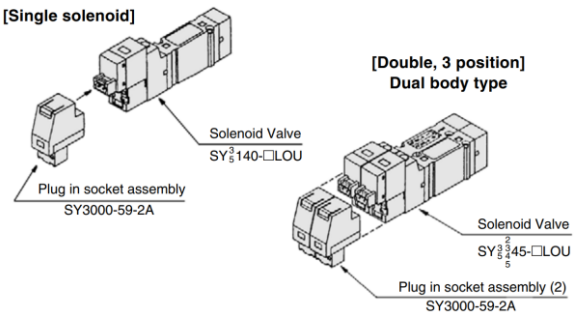

Note) Using a valve other than a non-polar type may cause trouble.

Specific Product Precautions ⑥

Be sure to read before handling. Refer to main text for detailed precautions on every series.

DIN Rail Dimensions/Weight

■SY3000/5000

VZ1000-11-1-☐

※Enter a number from the DIN rail dimension table below in them.

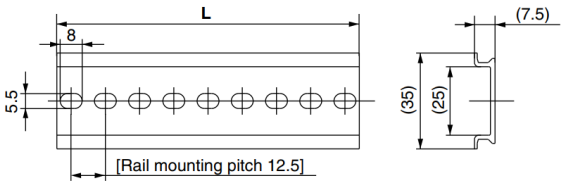

No.	0	1	2	3	4	5	6	7	8	9
L dimension	98	110.5	123	135.5	148	160.5	173	185.5	198	210.5
Weight (g)	17.6	19.9	22.1	24.4	26.6	28.9	31.1	33.4	35.6	37.9

No.	10	11	12	13	14	15	16	17	18	19
L dimension	223	235.5	248	260.5	273	285.5	298	310.5	323	335.5
Weight (g)	40.1	42.4	44.6	46.9	49.1	51.4	53.6	55.9	58.1	60.4

No.	20	21	22	23	24	25	26	27	28	29
L dimension	348	360.5	373	385.5	398	410.5	423	435.5	448	460.5
Weight (g)	62.6	64.9	67.1	69.4	71.6	73.9	76.1	78.4	80.6	82.9

■SY7000/SY9000

VZ1000-11-4-☐

※Enter a number from the DIN rail dimension table below in them.

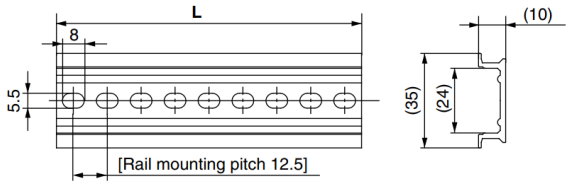

No.	0	1	2	3	4	5	6	7	8	9
L dimension	98	110.5	123	135.5	148	160.5	173	185.5	198	210.5
Weight (g)	24.8	28	31.1	34.3	37.4	40.6	43.8	46.9	50.1	53.3

No.	10	11	12	13	14	15	16	17	18	19
L dimension	223	235.5	248	260.5	273	285.5	298	310.5	323	335.5
Weight (g)	56.4	59.6	62.7	65.9	69.1	72.2	75.4	78.6	81.7	84.9

No.	20	21	22	23	24	25	26	27	28	29
L dimension	348	360.5	373	385.5	398	410.5	423	435.5	448	460.5
Weight (g)	88	91.2	94.4	97.5	100.7	103.9	107	110.2	113.3	116.5

DIN Rail for SY7000/9000 Series

⚠ Caution

The DIN rail used with the SY7000 and SY9000 series is stronger than that used with the SY3000 and SY5000 series. Use this exclusive DIN rail with the SY7000 and SY9000 series. Furthermore, if using a DIN rail other than that supplied by SMC, refer to the manifold mounting section below, and mount using the same method as prescribed for side facing and rear facing, regardless of the mounting orientation.

Manifold Mounting

⚠ Caution

1. For Type 23, 43, 45, 45☐ and 60 DIN rail mounting, when attaching a manifold to a mounting surface, etc., with bolts, if the entire bottom surface of the DIN rail contacts the mounting surface in a horizontal mounting, it can be used by simply securing both ends of the DIN rail. However, for any other mounting method or for side facing and rear facing, etc., secure the DIN rail with bolts at uniform intervals using the following as a guide: 2 to 5 stations at 2 locations, 6 to 10 stations at 3 locations, 11 to 15 stations at 4 locations, and 16 to 20 stations at 5 locations. In addition, even in the case of a horizontal mounting, if the mounting surface is subject to vibration, etc., take the same measures indicated above. If secured at fewer than the specified number of locations, warping or twisting may occur in the DIN rail and manifold, causing trouble such as air leakage.
   Also, when using mounting screws for the DIN rail on the bottom side (L3 dimension in the dimension table) of the manifold valve body, the height of the screw head has to be as follows.
   Type 23, 43 (SY9000): 8 mm or less
   Type 45 (SY3000, 5000): 5.8 mm or less
   For type 60:
   SY3000: 4.7 mm or less
   SY5000: 5.8 mm or less
   SY7000: 8 mm or less
   [This is the case for type 60.]

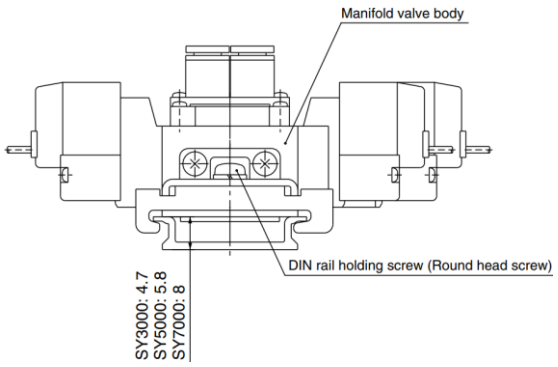

2. There will be slight variations in the width of manifold blocks due to tolerance (±0.15 mm) for the stacking manifold type of the SS5Y9-23 series and SS5Y9-43 series.
   As the manifold is made up of a combination of manifold blocks, there will be an error due to accumulated tolerance between the actual pitch dimensions of the mounting holes used to secure the manifold and the values stated in the catalog. Keep this in mind when increasing the number of stations.

Specific Product Precautions ⑦

Be sure to read before handling. Refer to main text for detailed precautions on every series.

One-touch Fittings

⚠ Caution

When fittings are used, they may interfere with one another depending on their types and sizes. Therefore, the dimensions of the fittings to be used should first be confirmed in their respective catalogs.

• Tubing attachment/detachment for One-touch fittings

1) Attaching of tubing

1. Take a tubing having no flaws on its periphery and cut it off at a right angle. When cutting the tubing, use tubing cutters TK-1, 2 or 3. Do not use pinchers, nippers or scissors, etc. If cutting is done with tools other than tubing cutters, the tubing may be cut diagonally or become flattened, etc., making a secure installation impossible, and causing problems such as the tubing pulling out after installation or air leakage. Allow some extra length in the tubing.
2. Grasp the tubing, slowly push it straight (0 to 5°) into the One-touch fitting until it comes to a stop.
3. After inserting the tubing, pull on it lightly to confirm that it will not come out. If it is not installed securely all the way into the fitting, this can cause problems such as air leakage or the tubing pulling out.

2) Detaching of tubing

1. Push in the release button sufficiently, pushing its collar equally around the circumference.
2. Pull out the tubing while holding down the release button so that it does not come out. If the release button is not pressed down sufficiently, there will be increased bite on the tubing and it will become more difficult to pull it out.
3. When the removed tubing is to be used again, cut off the portion which has been chewed before reusing it. If the chewed portion of the tubing is used as is, this can cause trouble such as air leakage or difficulty in removing the tubing.

Other Tubing Brands

⚠ Caution

1. When using other than SMC brand tubing, confirm that the following specifications are satisfied with respect to the outside diameter tolerance of the tubing.

1) Nylon tubing	within ±0.1 mm
2) Soft nylon tubing	within ±0.1 mm
3) Polyurethane tubing	within +0.15 mm, within –0.2 mm.

Do not use tubing which do not meet these outside diameter tolerances. It may not be possible to connect them, or they may cause other trouble, such as air leakage or the tubing pulling out after connection.

M8 Connector

⚠ Caution

1. M8 connector types have an IP65 (enclosure) rating, offering protection from dust and water. However please note: these products are not intended for use in water. Select a SMC connector cable (V100-49-1-☐) or a FA sensor type connector, with M8 threaded 3 pin specifications conforming to Nippon Electric Control Equipment Association Standard, NECA4202 (IEC60947-5-2). Make sure the connector O.D. is 10.5mm or less when used with the SY3000 series manifold. If more than 10.5mm, it cannot be mounted due to the size.
2. Do not use a tool to mount the connector, as this may cause damage. Only tighten by hand. (0.4 to 0.6N·m)
3. The excessive stress on the cable connector will not be able to satisfy the IP65 rating. Please use caution and do not apply a stress of 30N or greater.

⚠ Caution

Failure to meet IP65 performance may result if using alternative connectors than those shown above, or when insufficiently tightened.

Connector cable mounting



Note) Connector cable should be mounted in the correct direction. Make sure that the arrow symbol on the connector is facing the triangle symbol on the valve when using SMC connector cable (V100-49-1-☐).
Be careful not to squeeze it in the wrong direction, as problems such as pin damage may occur.

Specific Product Precautions ⑧

Be sure to read before handling. Refer to main text for detailed precautions on every series.

M8 Connector

⚠ Caution

■Connector cable

- Connector cable for M8 can be ordered as follows:
- Refer to page 11 for the surge voltage suppressor.

How to Order

1. To order solenoid valve and connector cable at the same time. (Connector cable will be included in the shipment of the solenoid valve.)

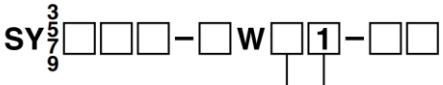

Nil	None
A	IEC60947-2 compliant

Symbol	Cable length (mm)
1	300
2	500
3	1000
4	2000
5	3000
6	4000
7	5000

Ex. 1) Cable length: 300mm
SY312-5W1ZE-C4
•Symbol for electrical entry

2. To order connector cable only

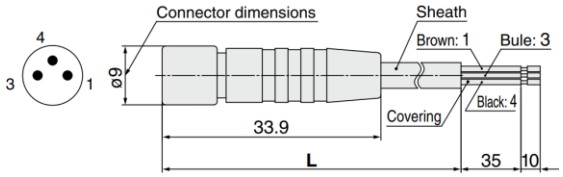

Cable length (L)	Part no.
300 mm	V100-49-1-1
500 mm	V100-49-1-2
1000 mm	V100-49-1-3
2000 mm	V100-49-1-4
5000 mm	V100-49-1-7
3000 mm	V100-49-1-5
4000 mm	V100-49-1-6

Sheath O.D.	ø3.4 mm
Cover diameter	ø1.16 mm
Conductor area	0.16 mm²

[Dimensions when installed]

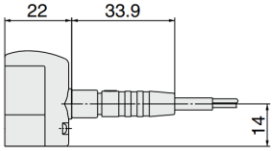

Solenoid Valve Mounting

⚠ Caution

Mount it so that there is no slippage or deformation in gaskets, and tighten with the tightening torque as shown below.

Model	Thread size	Tightening torque
SY3000	M2	0.16 N·m
SY5000	M3	0.8 N·m
SY7000	M4	1.4 N·m
SY9000	M3	0.8 N·m

Replacement of Pilot Valve

⚠ Caution

Pilot valves in this series are improved to provide excellent energy saving results. However following this improvement, these new valves are no longer compatible with the current pilot valve used at the interface.

New type

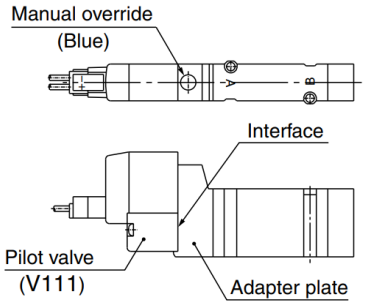

Current type

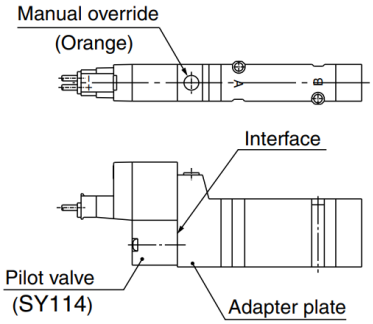

Specific Product Precautions ⑨

Be sure to read before handling. Refer to main text for detailed precautions on every series.

Interface Regulator

⚠ Caution

Specifications

Interface regulator model		ARBY3000-□-P-2	ARBY3000-□-$^{A1}_{B1}$-2		ARBY5000-□-P-2	ARBY5000-□-$^{A1}_{B1}$-2		ARBY7000-□-P-2	ARBY7000-□-$^{A1}_{B1}$-2	
Applicable solenoid valve model		SY3□40(R)			SY5□40(R)			SY7□40(R)		
Regulated port		P	A	B	P	A	B	P	A	B
Set pressure range		0.1 to 0.7 MPa								
Maximum operating pressure		0.7 MPa								
Fluid		Air								
Ambient and fluid temperature		Max. 50°C								
Connection port of pressure gauge		M5 x 0.8								
Weight W (g)	With pressure gauge	46 g (05), 50 g (06)			66.8 g			110.8 g		
	With plug	20 g			60.4 g			103.2 g		
Supply side effective area Note 3)	P→A,B	—	2.45 mm²		—	7.61 mm²		—	13.54 mm²	
Exhaust side effective area Note 3)	A,B→EA,EB	4.05 mm²	3.91 mm²		11.1 mm²	10.1 mm²		15.71 mm²	15.71 mm²	

Note 1) Pressurize the interface regulator from P port on the base.

Note 2) With closed center and pressure center valves, the pressure can be regulated through P port only.

Note 3) Effective area, excluding the regulated port, when a primary pressure of 0.5 MPa is supplied with regulators mounted on the solenoid valves (2 positions) and sub-plate. Refer to "Flow Rate Characteristics" regarding the regulated port.

Note 4) Valves for weight include gasket and mounting screws.

Note 5) With A, B ports regulated (P port controlled A, B ports regulated), the effective area (Cv factor) for the regulated port and unregulated passage (P to B or P to A) decreases as shown in the graph below when the set pressure is 0.25 MPa or less.

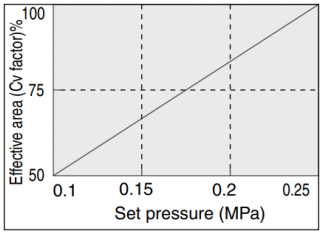

Symbol

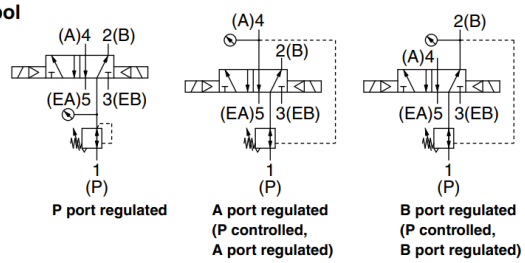

P port regulated

A port regulated (P controlled, A port regulated)

B port regulated (P controlled, B port regulated)

Construction : 5 port body ported

SY series

Symbol
2 position single

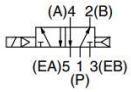

2 position single

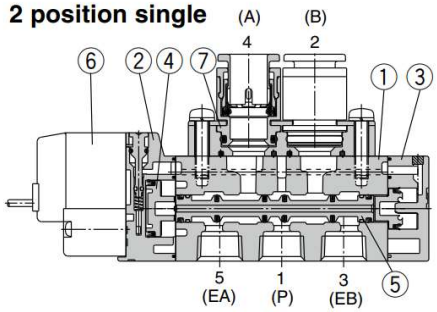

Symbol
2 position double

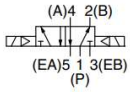

2 position double

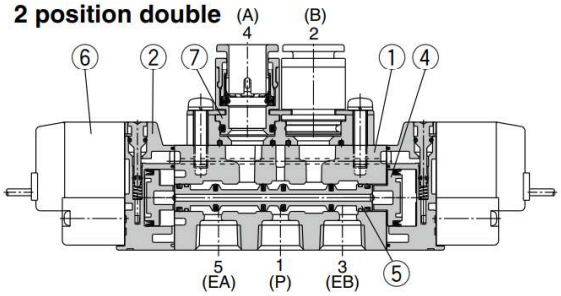

3 position closed center / exhaust center / pressure center

Symbol
3 position closed center



3 position exhaust center



3 position pressure center



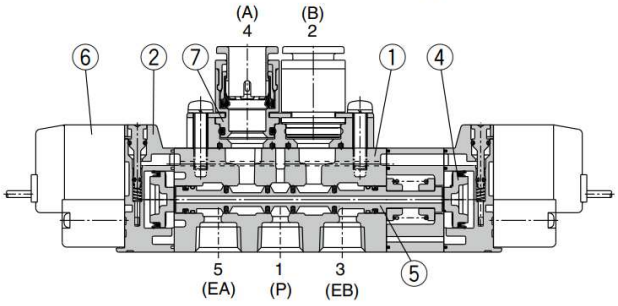

(This figure shows a closed center type.)

Component Parts

No.	Description	Material	Note
1	**Body**	Aluminum die-casted (SY3000: Zinc die-casted)	White
2	**Adapter plate**	Resin	White (SY9000: Gray)
3	**End plate**	Resin	White
4	**Piston**	Resin	–
5	**Spool valve assembly**	Aluminum, H-NBR	–

Replacement Parts

No.	Description	Part no.
6	**Pilot valve assembly**	Refer to "How to Order Pilot Valve Assembly" on page 21.
7	**M5 port block assembly**	Refer to "How to Order Port Block Assembly" on page 21.

Bracket Assembly No.

Description	Part no.
Bracket (For F1)	SX$^{3}_{5}_{7}$000-16-2A (with mounting screw)
Bracket (For F2)	SX$^{3}_{5}_{7}$000-16-1A (with mounting screw)

∗ SY9000 has no bracket.

How to Change Port Block Assembly

If using body port type, both A and B port sizes can be changed by replacing the port block assembly mounted on the body. When changing this block assembly, the correct screw torque must be achieved to avoid possible air leakage.

For SY5000

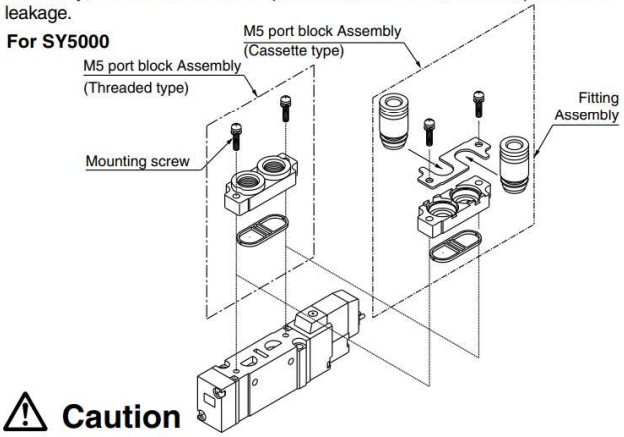

⚠ Caution

Mounting screw tightening torques

SY3000 (M2): 0.12 N·m
SY$^{5}_{7}$000 (M3): 0.6 N·m
SY9000 (M4): 1.4 N·m

Construction : 5 port base mounted

SY Series

Symbol
2 position single

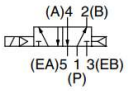

2 position single

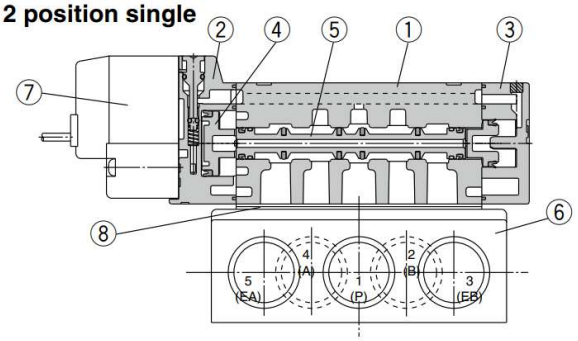

Symbol
2 position double

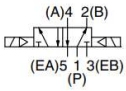

2 position double

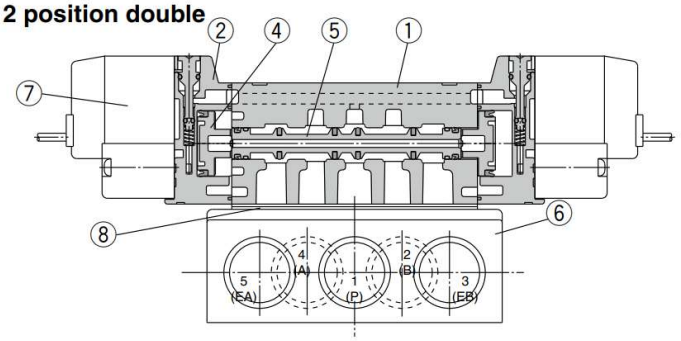

Symbol
3 position closed center

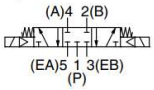

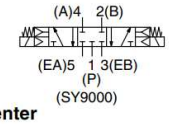

3 position exhaust center

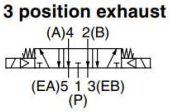

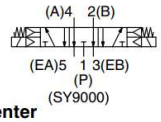

3 position pressure center

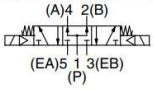

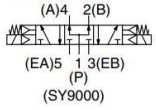

3 position closed center / exhaust center / pressure center

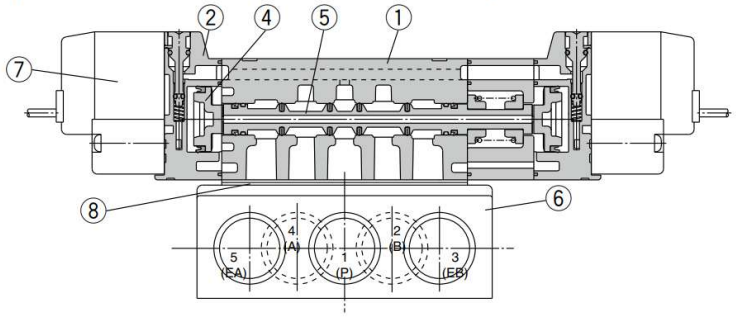

(This figure shows a closed center type.)

Component Parts

No.	Description	Material	Note
1	**Body**	Aluminum die-casted (SY3000: Zinc die-casted)	White
2	**Adapter plate**	Resin	White (SY9000: Gray)
3	**End plate**	Resin	White
4	**Piston**	Resin	–
5	**Spool valve assembly**	Aluminum, H-NBR	–

Replacement Parts

No.	Description		Part No. SY3□40	Part No. SY5□40	Part No. SY7□40	Part No. SY9□40	Note
6	**Sub-plate** Note)		SY3000-27-1[*]	SY5000-27-1[*]	1/4: SY7000-27-1[*] 3/8: SY7000-27-2[*]	3/8: SY9000-27-1[*] 1/2: SY9000-27-2[*]	Aluminum die-casted
7	**Pilot valve assembly**		Refer to "How to Order Pilot Valve Assembly" on page 21.				
8	**Gasket**	**Standard**	SY3000-11-25	SY5000-11-15	SY7000-11-11	SY9000-11-2	H-NBR
		CE/UKCA-compliant	SY3000-11-25	SY5000-11-18	SY7000-11-14	SY9000-11-2	
–	**Round head combination screw**		SY3000-23-4	AC00077	AC00296	SY9000-18-2	For valve mounting (Matt nickel plated)
	Reference screw size		(M2 x 21)	(M3 x 26)	(M4 x 31)	(M3 x 42)	

∗ Thread type

⚠ Caution

Mounting screw tightening torques

M2: 0.16 N·m
M3: 0.8 N·m
M4: 1.4 N·m

Construction : Body ported／Cassette type

SY series

Symbol
2 position single

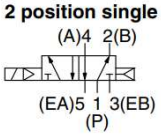

2 position single

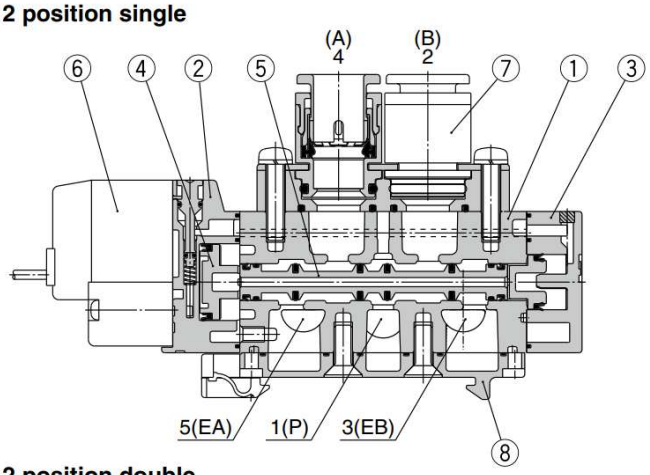

Symbol
2 position double

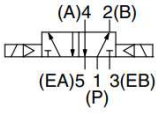

2 position double

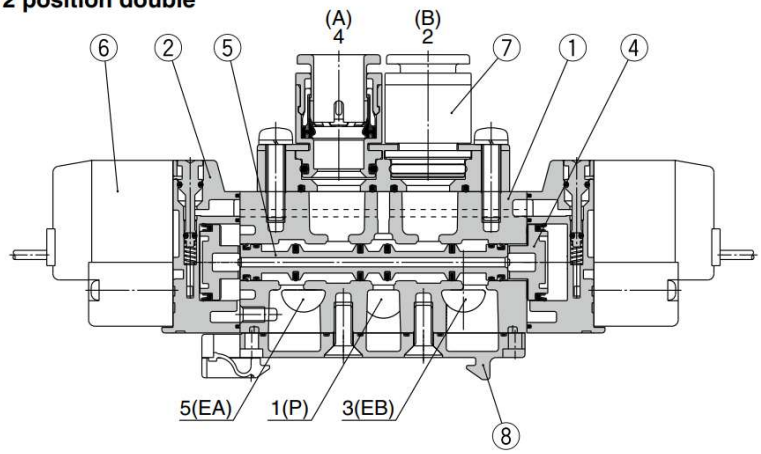

Symbol
3 position closed center

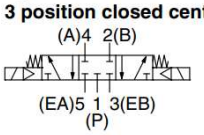

3 position exhaust center

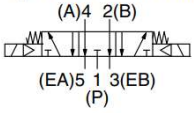

3 position pressure center

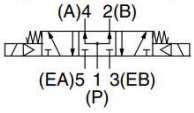

3 position closed center / exhaust center / pressure center

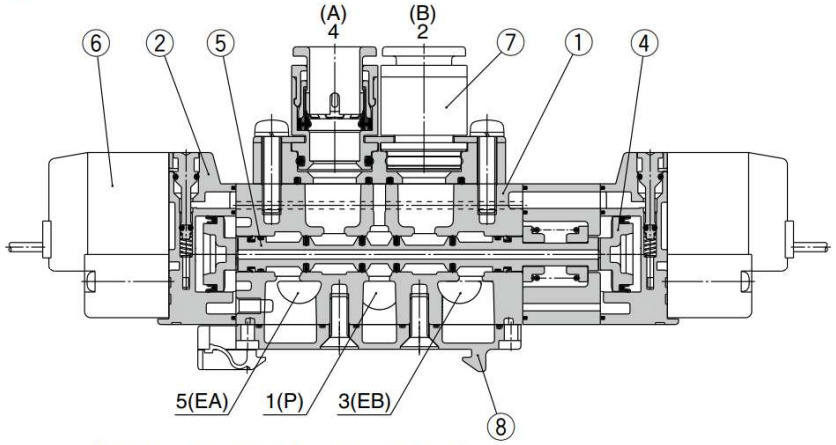

(This figure shows a closed center type.)

Component Parts

No.	Description	Material	Note
1	**Body**	Aluminum die-casted (SY3000: Zinc die-casted)	White
2	**Adapter plate**	Resin	White
3	**End plate**	Resin	White
4	**Piston**	Resin	—
5	**Spool valve assembly**	Aluminum/H-NBR	—

Replacement Parts

No.	Description	No.
6	**Pilot valve assembly**	Refer to “How to Order Pilot Valve Assembly” on page 21.
7	**Port block assembly**	Refer to “How to Order Port Block Assembly” on page 21.
8	**Bottom cover assembly** Note)	SY3000-41-2A (with screw, gasket)
		SY5000-41-2A (with screw, gasket)

Note) There is no bottom cover assembly available for SY7000.

How to Order Pilot Valve Assembly

V111 □ – 5 G □

Coil specifications

Nil	Standard
T	With power saving circuit (24 VDC, 12 VDC only)

* Power saving circuit is not available in the case of D, DO or W□ type.

Rated voltage

5	24 VDC
6	12 VDC
V	6 VDC
S	5 VDC
R	3 VDC
1	100 VAC 50/60Hz
2	200 VAC 50/60Hz
3	110 VAC 50/60Hz [115 VAC 50/60Hz]
4	220 VAC 50/60Hz [230 VAC 50/60Hz]

* For type W□, DC voltage is only available.
* CE/UKCA-compliant: For DC only.

[Tightening torque]
V111: 0.12 N·m
V115: 0.16 N·m

Light/Surge voltage suppressor

Nil	Without light/surge voltage suppressor
S	With surge voltage suppressor
Z	With light/surge voltage suppressor
R	With surge voltage suppressor (Non-polar type)
U	With light/surge voltage suppressor (Non-polar type)

* For AC voltage valves there is no "S" option. It is already built-in to the rectifier circuit.
* For "R" and "U", DC voltage is only available.
* Power saving circuit is only available in the "Z" type.

Electrical entry

G	Grommet, 300 mm lead wire	
H	Grommet, 600 mm lead wire	
L	L plug connector	With lead wire
LN		Without lead wire
LO		Without connector
M	M plug connector	With lead wire
MN		Without lead wire
MO		Without connector
WO	M8 connector	Without connector cable
W□		With connector cable Note 1)

* For connector cable of M8 connector, refer to page 15.

Note 1) Enter the cable length symbols in □. Please be sure to fill in the blank referring to page 16.

■ DIN terminal type

V115 – 5 D □

Rated voltage

5	24 VDC
6	12 VDC
1	100 VAC 50/60 Hz
2	200 VAC 50/60 Hz
3	110 VAC 50/60 Hz [115 VAC 50/60 Hz]
4	220 VAC 50/60 Hz [230 VAC 50/60 Hz]

* DC specifications of type D and DO is only available with 12 and 24 VDC.

Light/Surge voltage suppressor

Nil	Without light/surge voltage suppressor
S	With surge voltage suppressor (Non-polar type)
Z	With light/surge voltage suppressor (Non-polar type)

* DOZ and YOZ are not available.
* For AC voltage valves there is no "S" option. It is already built-in to the rectifier circuit.

Electrical entry

D	DIN terminal (Type D)	With connector
DO		Without connector
Y	DIN terminal (Type Y)	With connector
YO		Without connector

Note) Do not replace V111 (G, H, L, M) to V115 (DIN terminal) and vice versa when replacing pilot valve assembly only.

Note) Since V111 and V115 are CE/UKCA-compliant as standard, the suffix "-Q" is not necessary.

How to Order Port Block Assembly

SY □ 000 – 6A – □ □

Series

3	SY3000
5	SY5000
7	SY7000
9	SY9000

A, B port size
Thread piping

Symbol	Port size	Applicable series
M5	M5 x 0.8	SY3000
01	1/8	SY5000
02	1/4	SY7000
02	1/4	SY9000
03	3/8	

Thread type

Nil	Rc
F	G
N	NPT
T	NPTF

* Except for M5

One-touch fitting (Metric size)

Symbol	Port size	Applicable series
C4	One-touch fitting for ø4	SY3000
C6	One-touch fitting for ø6	
C4	One-touch fitting for ø4	SY5000
C6	One-touch fitting for ø6	
C8	One-touch fitting for ø8	
C8	One-touch fitting for ø8	SY7000
C10	One-touch fitting for ø10	
C8	One-touch fitting for ø8	SY9000
C10	One-touch fitting for ø10	
C12	One-touch fitting for ø12	

One-touch fitting (Inch size)

Symbol	Port size	Applicable series
N3	One-touch fitting for ø5/32"	SY3000
N7	One-touch fitting for ø1/4"	
N3	One-touch fitting for ø5/32"	SY5000
N7	One-touch fitting for ø1/4"	
N9	One-touch fitting for ø5/16"	
N9	One-touch fitting for ø5/16"	SY7000
N11	One-touch fitting for ø3/8"	
N9	One-touch fitting for ø5/16"	SY9000
N11	One-touch fitting for ø3/8"	

How to Change Port Block Assembly

Connecting port size of A and B can be changed by replacing port block assembly mounted on body. When changing block assembly, correct screw torque must be achieved to avoid trouble; e.g. air leakage.
With the one-touch fitting port block assembly, it is only necessary to change the fitting and not the whole block. Refer to following part numbers.

One-touch fitting (Metric size)

Port size	Fitting assembly part no.	Applicable series
One-touch fitting for ø4	VVQ1000-50A-C4	SY3000
One-touch fitting for ø6	VVQ1000-50A-C6	
One-touch fitting for ø4	VVQ1000-51A-C4	SY5000
One-touch fitting for ø6	VVQ1000-51A-C6	
One-touch fitting for ø8	VVQ1000-51A-C8	
One-touch fitting for ø8	VVQ2000-51A-C8	SY7000
One-touch fitting for ø10	VVQ2000-51A-C10	
One-touch fitting for ø8	VVQ4000-50B-C8	SY9000
One-touch fitting for ø10	VVQ4000-50B-C10	
One-touch fitting for ø12	VVQ4000-50B-C12	

One-touch fitting (Inch size)

Port size	Fitting assembly part no.	Applicable series
One-touch fitting for ø5/32"	VVQ1000-50A-N3	SY3000
One-touch fitting for ø1/4"	VVQ1000-50A-N7	
One-touch fitting for ø5/32"	VVQ1000-51A-N3	SY5000
One-touch fitting for ø1/4"	VVQ1000-51A-N7	
One-touch fitting for ø5/16"	VVQ1000-51A-N9	
One-touch fitting for ø5/16"	VVQ2000-51A-N9	SY7000
One-touch fitting for ø3/8"	VVQ2000-51A-N11	
One-touch fitting for ø5/16"	VVQ4000-50B-N9	SY9000
One-touch fitting for ø3/8"	VVQ4000-50B-N11	

Note) Purchasing order is available in units of 10 pieces.

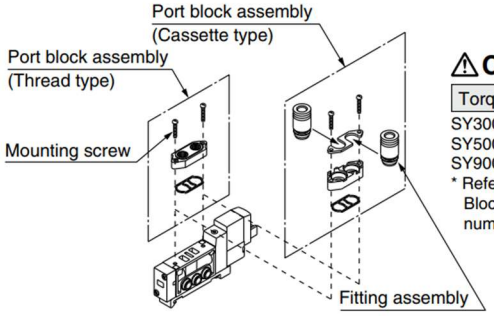

⚠Caution

Torque for mounting screws
SY3000 (M2): 0.12N·m
SY5000/7000 (M3): 0.6·Nm
SY9000 (M4): 1.4N·m
* Refer to "How to Change Port Block Assembly" for part numbers.

How to Order Pilot Valve Assembly

How to Order Port Block Assembly

Construction : 3 port body ported

Symbol Single — **Normally closed (N.C.) Single solenoid**

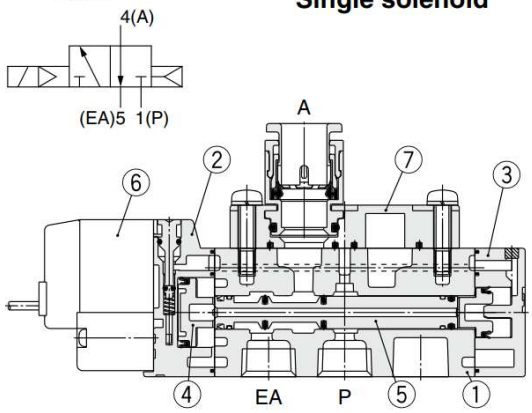

Symbol Double — **Normally closed (N.C.) Double solenoid**

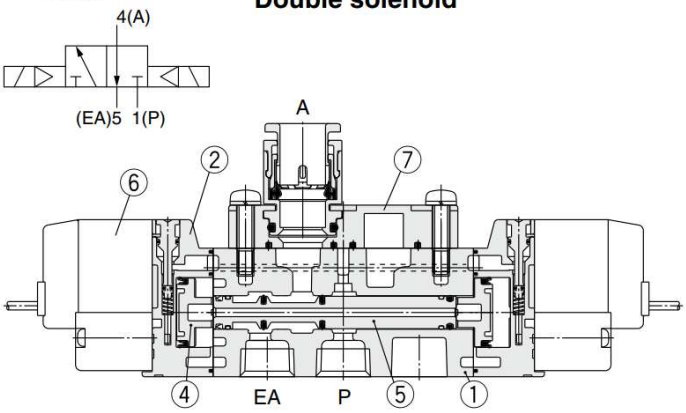

Symbol Single — **Normally open (N.O.) Single solenoid**

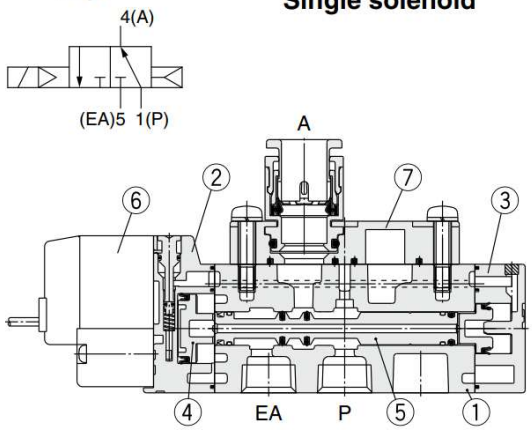

Symbol Double — **Normally open (N.O.) Double solenoid**

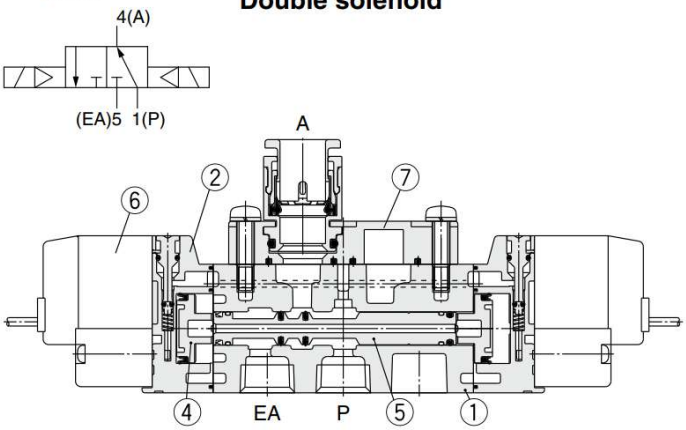

Component Parts

No.	Description	Material	Note
1	Body	Aluminum die-casted (SY3000: Zinc die-casted)	White
2	Adapter plate	Resin	White
3	End plate	Resin	White
4	Piston	Resin	–
5	Spool valve assembly	Aluminum, H-NBR	–

Replacement Parts

No.	Description	No.
6	Pilot valve assembly	Refer to "How to Order Pilot Valve Assembly" on page 21.
7	M5 port block assembly	Refer to "How to Order Port Block Assembly" below.

How to Order M5 Port Block Assembly

SY □ 00 − 2A − □□

Series

3	SY300 series
5	SY500 series

Thread type

Nil	Rc
F	G
N	NPT
T	NPTF

∗ Except for M5

A, B port size

Thread piping

Symbol	Port size	Applicable series
M5	M5 x 0.8	SY300
01	1/8	SY500

One-touch fitting (Metric size)

Symbol	Port size	Applicable series
C4	One-touch fitting for ø4	SY300
C6	One-touch fitting for ø6	
C4	One-touch fitting for ø4	SY500
C6	One-touch fitting for ø6	
C8	One-touch fitting for ø8	

One-touch fitting (Inch size)

Symbol	Port size	Applicable series
N3	One-touch fitting for ø5/32"	SY300
N7	One-touch fitting for ø1/4"	
N3	One-touch fitting for ø5/32"	SY500
N7	One-touch fitting for ø1/4"	
N9	One-touch fitting for ø5/16"	

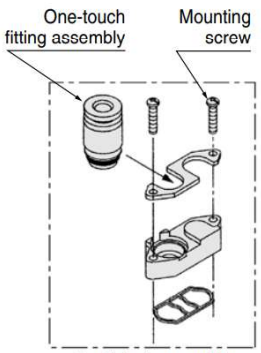

∗ Only replacement of the fittings assembly is possible.

Metric size

SY300	One-touch fitting for ø4	VVQ1000-50A-C4
	One-touch fitting for ø6	VVQ1000-50A-C6
SY500	One-touch fitting for ø4	VVQ1000-51A-C4
	One-touch fitting for ø6	VVQ1000-51A-C6
	One-touch fitting for ø8	VVQ1000-51A-C8

Inch size

SY300	One-touch fitting for ø5/32"	VVQ1000-50A-N3
	One-touch fitting for ø1/4"	VVQ1000-50A-N7
SY500	One-touch fitting for ø5/32"	VVQ1000-51A-N3
	One-touch fitting for ø1/4"	VVQ1000-51A-N7
	One-touch fitting for ø5/16"	VVQ1000-51A-N9

⚠ Caution

Mounting screw tightening torques

SY300 (M2) : 0.12 N·m
SY500 (M3) : 0.6 N·m

Construction : 3 port base mounted

Symbol
Single

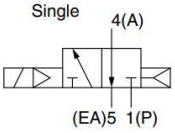

Normally closed (N.C.)
Single solenoid

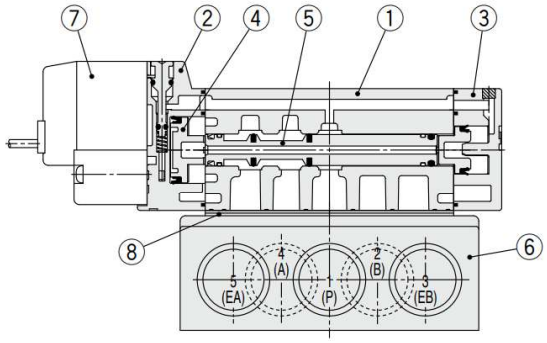

Symbol
Double

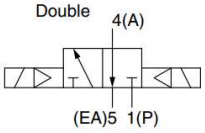

Normally closed (N.C.)
Double solenoid

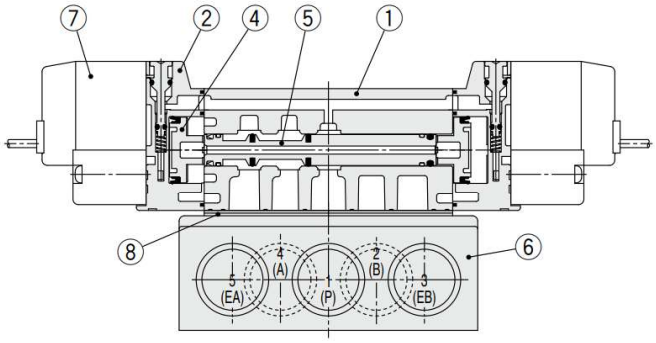

Symbol
Single

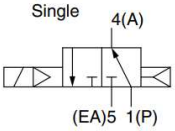

Normally open (N.O.)
Single solenoid

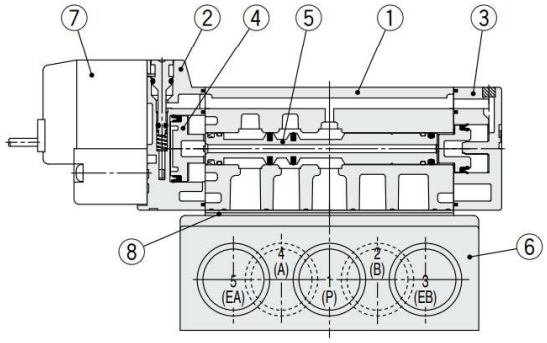

Symbol
Double

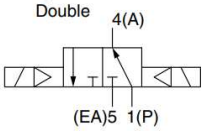

Normally open (N.O.)
Double solenoid

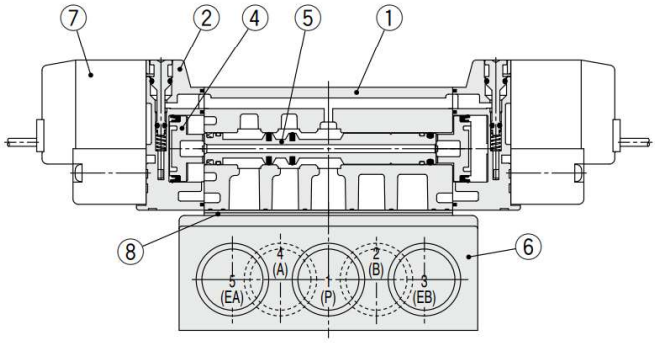

Component Parts

No.	Description	Material	Note
1	**Body**	Aluminum die-casted (SY3000: Zinc die-casted)	White
2	**Adapter plate**	Resin	White
3	**End plate**	Resin	White
4	**Piston**	Resin	—
5	**Spool valve assembly**	Aluminum, H-NBR	—

Replacement Parts

No.	Description		Part No. SY3□40	Part No. SY5□40	Part No. SY7□40	Note
6	**Sub-plate** Note)		SY3000-27-1[*]	SY5000-27-1[*]	1/4 :SY7000-27-1[*] 3/8 :SY7000-27-2[*]	Aluminum die-casted
7	**Pilot valve assembly**		Refer to "How to Order Pilot Valve Assembly" on page 21.			
8	**Gasket**	**Standard**	SY3000-11-25	SY5000-11-15	SY7000-11-11	H-NBR
		CE-compliant	SY3000-11-25	SY5000-11-18	SY7000-11-14	
—	Round head combination screw		SY3000-23-4	AC00077	AC00296	For valve mounting (Matt nickel plated)
	Reference screw size		(M2 x 21)	(M3 x 26)	(M4 x 31)	

* Thread type

⚠ Caution

Mounting screw tightening torques

M2: 0.16 N·m
M3: 0.8 N·m
M4: 1.4 N·m

DIN Rail Manifold Exploded View

SY3000
Type 60

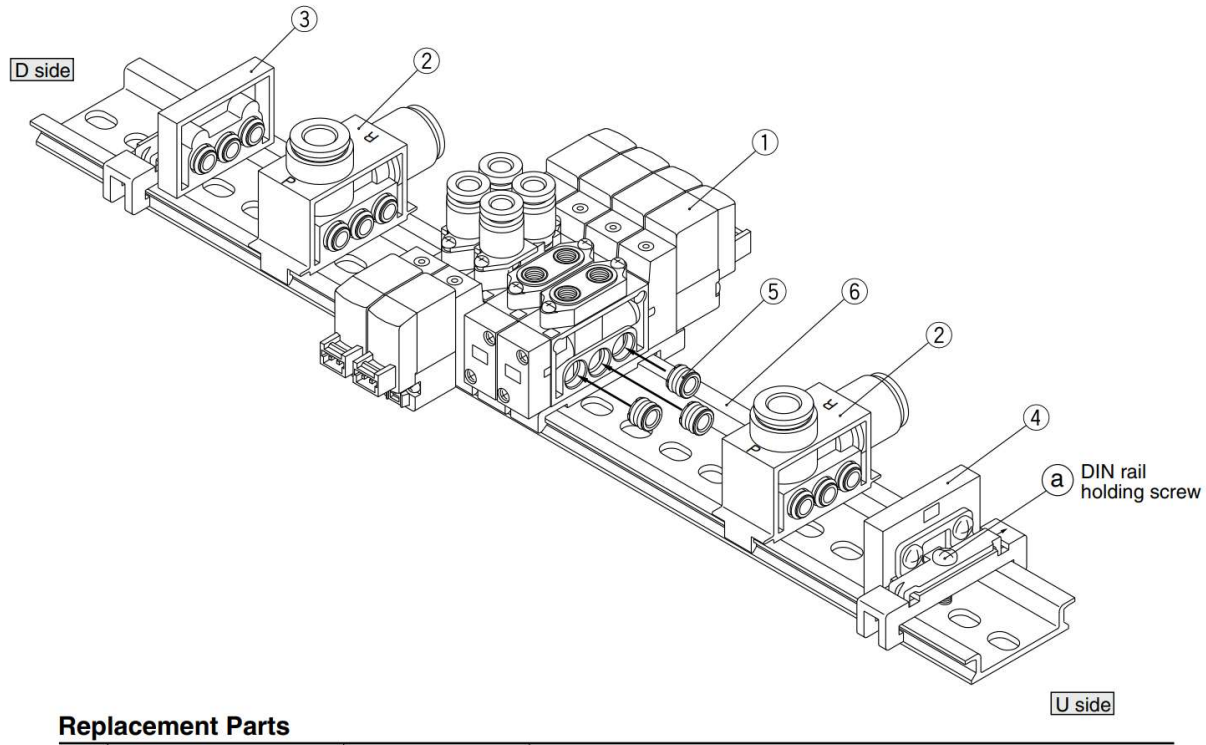

Replacement Parts

No.	Description	Part no.	Note
1	**Valve**	**SY3□60-□□-□(-Q)**	□ at the end of part number denotes A. B port size: M5, C4, C6, N3, N7. Includes bushing assembly (SY3000-52-5A) 3 pcs.
2	**SUP/EXH block assembly**	**SY3000-55-$\frac{1}{2}$A(-Q)**	P, R port (1: One-touch fitting for ø8, 2: One-touch fitting for ø5/16") Includes bushing assembly (SY3000-52-5A) 3 pcs.
3	**End block assembly**	**SY3000-56-1A(-Q)**	For D side (Bushing assembly: Not available for SY3000-52-5A)
4	**End block assembly**	**SY3000-56-1B(-Q)**	For U side (Bushing assembly: Not available for SY3000-52-5A)
5	**Bushing assembly**	**SY3000-52-5A**	
6	**DIN rail**	**VZ1000-11-1-□**	Refer to page 14.

DIN Rail Manifold Exploded View

SY5000
Type 60

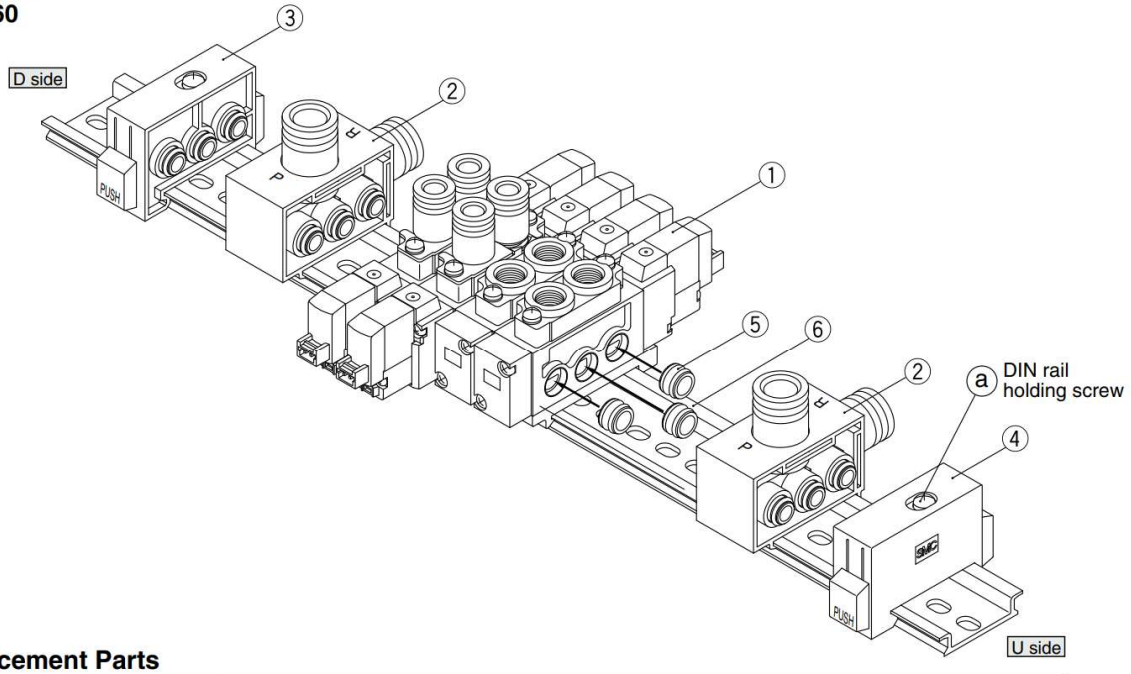

Replacement Parts

No.	Description	Part no.	Note
1	**Valve**	**SY5□60-□□-□(-Q)**	□ at the end of part number denotes A. B port size: 01, C4, C6, C8, N3, N7, N9. Includes bushing assembly (SY5000-52-3A) 3 pcs.
2	**SUP/EXH block assembly**	**SY5000-55-$\frac{1}{2}$A(-Q)**	P, R port (1: One-touch fitting for ø10, 2: One-touch fitting for ø3/8") Includes bushing assembly (SY5000-52-3A) 3 pcs.
3	**End block assembly**	**SY5000-56-1A(-Q)**	For D side (Bushing assembly: Not available for SY5000-52-3A)
4	**End block assembly**	**SY5000-56-1B(-Q)**	For U side (Bushing assembly: Not available for SY5000-52-3A)
5	**Bushing assembly**	**SY5000-52-3A**	
6	**DIN rail**	**VZ1000-11-1-□**	Refer to page 14.

How to Add Additional Valves to the DIN Rail
Valves can be added at any station on the rail.

1. Loosen the manifold base clamping screw ⓐ.
2. Separate the valves at the point where more valves are to be added.
3. Mount the additional valves on the DIN rail as shown in Fig. 1
4. Connect them together while pressing the block assemblies toward each other, and tighten the holding screw ⓐ to fix them to the DIN rail.

⚠Caution

Tightening torque

SY3000: 1 N·m

SY5000: 1.4 N·m

(While lightly holding the blocks after fixing an end block on one side, tighten the other end block for better sealing after no gap between valves is confirmed.)

- **Bushing assembly must be seated properly to each valve block in order to prevent air leaks from occurring.**
- **Refer to the fig. 2 when dismounting the valve from the DIN rail.**

Fig. 1 Manifold mounting procedure

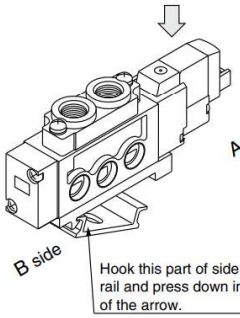

Fig. 2 Manifold dismounting procedure

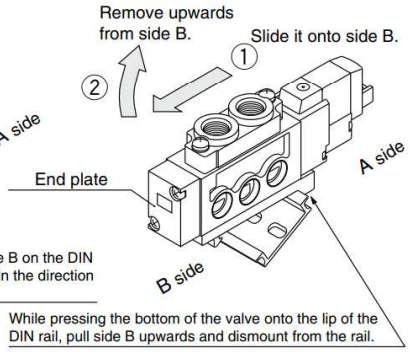

⚠Caution When clamping screw ⓐ of the end block is not sufficiently tightened during reassembly, air leakage may result. Before supplying air, check that there are no gaps between valves and that the end block is firmly secured to the DIN rain in order to ensure air supply without leakage.

DIN Rail Manifold Exploded View

SY7000

Type 60

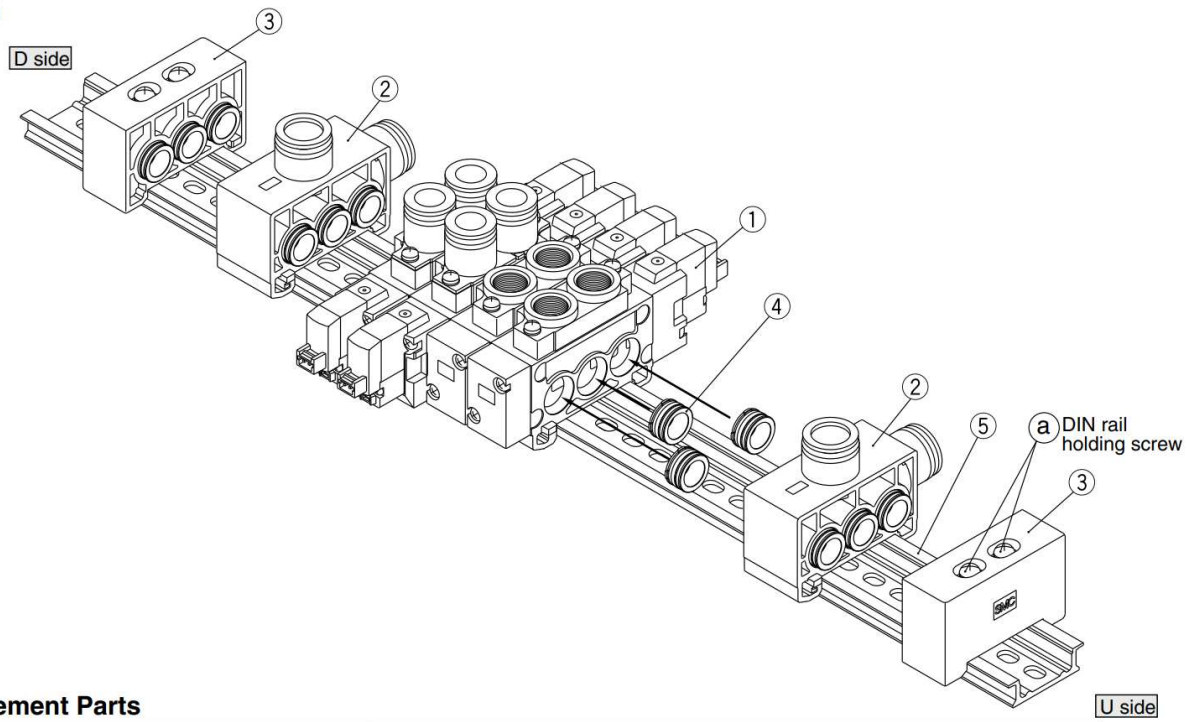

Replacement Parts

No.	Description	Part no.	Note
1	**Valve**	**SY7□60-□□-□(-Q)**	□ at the end of part number denotes A. B port size: 02, C8, C10, N9, N11. Includes bushing assembly (SY7000-70-1A) 3 pcs.
2	**SUP/EXH block assembly**	**SY7000-75-$^{1}_{3}$A(-Q)**	P,R port size (1: ø12 One-touch fitting, 3: 3/8"One-touch fitting) Includes bushing assembley (SY7000-70-1A) 3pcs.
3	**End block assembly**	**SY7000-56-1A(-Q)**	In common for D side and U side (Bushing assembly: Not available for SY7000-70-1A.)
4	**Bushing assembly**	**SY7000-70-1A**	
5	**DIN rail**	**VZ1000-11-4-□**	Refer to page 14.

How to Add Additional Valves to the DIN Rail

Valves can be added at any station on the rail.

1. Loosen the rail holding screw ⓐ at both of 2 locations which holds the manifold base either in the U side or D side.
   [When removing the end block assembly from the DIN rail, loosen the holding screws for DIN rail at first, then slide it to the edge of the rail.]
2. Separate the valves at the point where more valves are to be added.
3. Mount the additional valves on the DIN rail as shown in Fig. 1.
4. Connect them together while pressing the block assemblies toward each other, and tighten the 2 holding screws ⓐ for DIN rail alternately (2 to 3 times) with the prescribed torque (1.4 N·m) to fix them to the DIN rail.

⚠Caution

Tightening torque

SY7000: 1.4 N·m

(While lightly holding the blocks after fixing an end block on one side, tighten the other end block for better sealing after no gap between valves is confirmed.)

- **Bushing assembly must be seated properly to each valve block in order to prevent air leaks from occurring.**
- **Refer to the fig. 2 when dismounting the valve from the DIN**

Fig. 1 Manifold mounting procedure

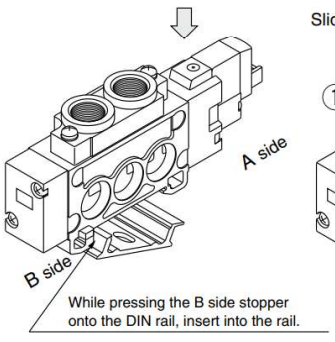

Fig. 2 Manifold dismounting procedure

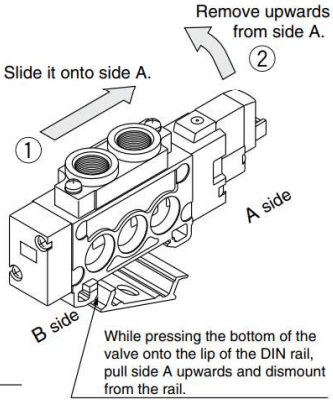

⚠Caution When clamping screw ⓐ of the end block is not sufficiently tightened during reassembly, air leakage may result. Before supplying air, check that there are no gaps between valves and that the end block is firmly secured to the DIN rain in order to ensure air supply without leakage.

TROUBLE SHOOTING

Trouble	For valve non-conformance, take following countermeasures referring to trouble.	Possible cause	Countermeasures
Malfunction No air changeover.	The valve operates when the manual override button is pushed? No →	**1) Operation failure or sticking of the main valve.** ●Foreign matter from the piping and air source got caught in the main valve, causing a malfunction. ●Malfunction occurred due to sticking such as swelling of the rubber part of the main valve.	- Replace the valve. - Clean the air supply. - If incorrect oil has been used for lubrication, remove the oil by air blow. - If there is a large amount of condensate or condensate cannot be removed completely, mount an auto drain or install a dryer and replace the valve.
	Yes	**2) Pressure drop** Air source pressure is reduced and minimum operating pressure of the valve was not reached, causing an operation failure.	- Adjust the pressure within the specification range for the valve.
		3) Excessive oil supply Due to excessive lubrication, oil accumulated inside the valve, causing malfunction.	- Reduce the amount of lubrication to the amount at which the oil does not splash from the exhaust port [5/3 (EA/EB)].
	Energized? Is valve switched? No →	**1) Non-conformance of electric system** - Incorrect wiring - Fuse blown out, lead wire broken - Incorrect contact at the contact and connection - Sequencer non-conformance	- Check all parts and replace the part, if necessary.
	Yes	- Supply voltage insufficient	- Check the supply voltage.
		2) Drop of supply voltage Operation failure of the valve due to voltage drop.	- Check the supply voltage. Take corrective action if voltage drop is confirmed.
		3) Non-conformance of the installed pilot valve - Broken wire in the coil or burnout (High supply voltage, incorrect coil specification, entry of water)	- Replace the valve. - Protect the valve especially the coil to prevent being exposed to water.
	→	**1) Leakage current** Operation failure of the valve occurred due to residual voltage. (Valve is not turned OFF)	- Check the residual voltage. - Keep the residual voltage at 3% of the rated voltage or less.
		2) Non-conformance of the installed pilot valve - Foreign matter is caught in the moving part of the valve (or pilot valve). - Swelling of rubber parts inside the valve (or pilot valve)	- Clean the air supply. - Eliminate foreign matter with air blow. - Replace the valve when actions above do not improve the condition.

Trouble	For valve non-conformance, take following countermeasures referring to trouble.	Possible causes	Countermeasures
Air leakage	Find and check the air leakage point.		
	1. Leakage between valve and base. (Base mounted type)	**1) Valve mounting screw is loose**	- Tighten the mounting screw. **Proper tightening torque** - M2: 0.16N・m - M3: 0.8N・m - M4: 1.4N・m
		2) Damage or displacement of the gasket	- If gasket is scratched, replace the gasket.
		3) Foreign matter caught in the gasket seat	- Eliminate foreign matter with air blow. - If gasket is scratched, replace the gasket.
	2. Air leakage from output [2(B),4(A)] port and exhaust [5 (EA),3(EB)] port.	**1) Valve mounting screw is loose**	- Tighten the mounting screw. **Proper tightening torque** - M2: 0.16N・m - M3: 0.8N・m - M4: 1.4N・m - If gasket is scratched, replace the gasket.
		2) Internal air leakage increased because foreign matter get caught in the main valve.	- Replace the valve. - Clean the air supply.
		3) Sealing failure of the actuator (cylinder)	- Refer to the operation manual of the actuator for details.
	3. Air leakage from the pilot valve air exhaust port (PE port). (External pilot type)	**1) Foreign matter is caught in the pilot valve armature.**	- Replace the valve. - Clean the air supply.

If the countermeasures above are not effective, there may be a trouble with the valve.
Stop using the valve immediately.

If any of the examples below are applicable, there may be an internal trouble with the valve.
Stop using the valve immediately.
① It was used with a voltage other than the rated voltage.
② The supplied oil was not the specified type.
③ Lubrication was stopped during operation. or lubrication was interrupted temporarily.
④ Severe impact was applied.
⑤ Foreign matter such as condensate or dust has entered into the product.
⑥ Other than the cases mentioned above, any usage which falls under the precautions in this operation manual.

※ If you request us to investigate, please send the valve back to us in its original condition without disassembling it.

Revision history		
B	Precautions for Solenoid Valve	2025.4
C	Applicable crimped terminal	2026.4
D	Revision of the fitting connection designation.	2026.11

SMC Corporation

Tel: + 81 3 5207 8249 Fax: +81 3 5298 5362
URL https://www.smcworld.com

Note: Specifications are subject to change without prior notice and any obligation on the part of the manufacturer.
© SMC Corporation All Rights Reserved

No.SY3000-OMJ0003-D