Doc. no. PAB-OM-E001-F

Operation Manual

PRODUCT NAME

Process Pump

MODEL / Series / Product Number

PA(P)3310 Series

SMC Corporation

Contents

Safety Instructions -P.2 to 3

Names and functions of parts - P.4

Precautions - P.5 to 9

Applicable Fluids - P.10

Specifications - P.11

Performance Curve - P.12 to 13

Working Principle - P.14

Maintenance Parts - P.14

Piping and Operation - P.15

Dimensions - P.16

Safety Instructions

These safety instructions are intended to prevent hazardous situations and/or equipment damage.
These instructions indicate the level of potential hazard with the labels of “Caution,” “Warning” or “Danger.”
They are all important notes for safety and must be followed in addition to International Standards (ISO/IEC)*1) , and other safety regulations.

*1) ISO 4414: Pneumatic fluid power -- General rules relating to systems.
ISO 4413: Hydraulic fluid power -- General rules relating to systems.
IEC 60204-1: Safety of machinery -- Electrical equipment of machines.(Part 1: General requirements)
ISO 10218-1992: Manipulating industrial robots -Safety.
etc.

Caution	**Caution** indicates a hazard with a low level of risk which, if not avoided, could result in minor or moderate injury.
Warning	**Warning** indicates a hazard with a medium level of risk which, if not avoided, could result in death or serious injury.
Danger	**Danger** indicates a hazard with a high level of risk which, if not avoided, will result in death or serious injury.

Warning

1. The compatibility of the product is the responsibility of the person who designs the equipment or decides its specifications.
Since the product specified here is used under various operating conditions, its compatibility with specific equipment must be decided by the person who designs the equipment or decides its specifications based on necessary analysis and test results.
The expected performance and safety assurance of the equipment will be the responsibility of the person who has determined its compatibility with the product.
This person should also continuously review all specifications of the product referring to its latest catalog information, with a view to giving due consideration to any possibility of equipment failure when configuring the equipment.

2. Only personnel with appropriate training should operate machinery and equipment.
The product specified here may become unsafe if handled incorrectly.
The assembly, operation and maintenance of machines or equipment including our products must be performed by an operator who is appropriately trained and experienced.

3. Do not service or attempt to remove product and machinery/equipment until safety is confirmed.
1. The inspection and maintenance of machinery/equipment should only be performed after measures to prevent falling or runaway of the driven objects have been confirmed.
2. When the product is to be removed, confirm that the safety measures as mentioned above are implemented and the power from any appropriate source is cut, and read and understand the specific product precautions of all relevant products carefully.
3. Before machinery/equipment is restarted, take measures to prevent unexpected operation and malfunction.

4. Contact SMC beforehand and take special consideration of safety measures if the product is to be used in any of the following conditions.
1. Conditions and environments outside of the given specifications, or use outdoors or in a place exposed to direct sunlight.
2. Installation on equipment in conjunction with atomic energy, railways, air navigation, space, shipping, vehicles, military, medical treatment, combustion and recreation, or equipment in contact with food and beverages, emergency stop circuits, clutch and brake circuits in press applications, safety equipment or other applications unsuitable for the standard specifications described in the product catalog.
3. An application which could have negative effects on people, property, or animals requiring special safety analysis.
4. Use in an interlock circuit, which requires the provision of double interlock for possible failure by using a mechanical protective function, and periodical checks to confirm proper operation.

Safety Instructions

⚠ Caution

1.The product is provided for use in manufacturing industries.
The product herein described is basically provided for peaceful use in manufacturing industries.
If considering using the product in other industries, consult SMC beforehand and exchange specifications or a contract if necessary.
If anything is unclear, contact your nearest sales branch.

Limited warranty and Disclaimer/Compliance Requirements

The product used is subject to the following “Limited warranty and Disclaimer” and “Compliance Requirements”.
Read and accept them before using the product.

Limited warranty and Disclaimer

1. The warranty period of the product is 1 year in service or 1.5 years after the product is delivered, whichever is first.∗2)
Also, the product may have specified durability, running distance or replacement parts. Pleaseconsult your nearest sales branch.
2. For any failure or damage reported within the warranty period which is clearly our responsibility, a replacement product or necessary parts will be provided.
This limited warranty applies only to our product independently, and not to any other damage incurred due to the failure of the product.
3. Prior to using SMC products, please read and understand the warranty terms and disclaimers noted in the specified catalog for the particular products.

∗2) Vacuum pads are excluded from this 1 year warranty.
A vacuum pad is a consumable part, so it is warranted for a year after it is delivered.
Also, even within the warranty period, the wear of a product due to the use of the vacuum pad or failure due to the deterioration of rubber material are not covered by the limited warranty.

Compliance Requirements

1. The use of SMC products with production equipment for the manufacture of weapons of mass destruction(WMD) or any other weapon is strictly prohibited.

2. The exports of SMC products or technology from one country to another are governed by the relevant security laws and regulation of the countries involved in the transaction. Prior to the shipment of a SMC product to another country, assure that all local rules governing that export are known and followed.

Return of Product

If the product to be returned is contaminated or is possibly contaminated with substances that are harmful to humans, for safety reasons, please contact SMC beforehand and then employ a specialist cleaning company to decontaminate the product. After the decontamination prescribed above has been carried out, submit a Product Return Request Sheet or the Detoxification/Decontamination Certificate to SMC and await SMC’s approval and further instructions before attempting to return the item.
Please refer to the International Chemical Safety Cards (ICSC) for a list of harmful substances.
If you have any further questions, please don’t hesitate to contact your SMC sales representative.

Names and functions of parts

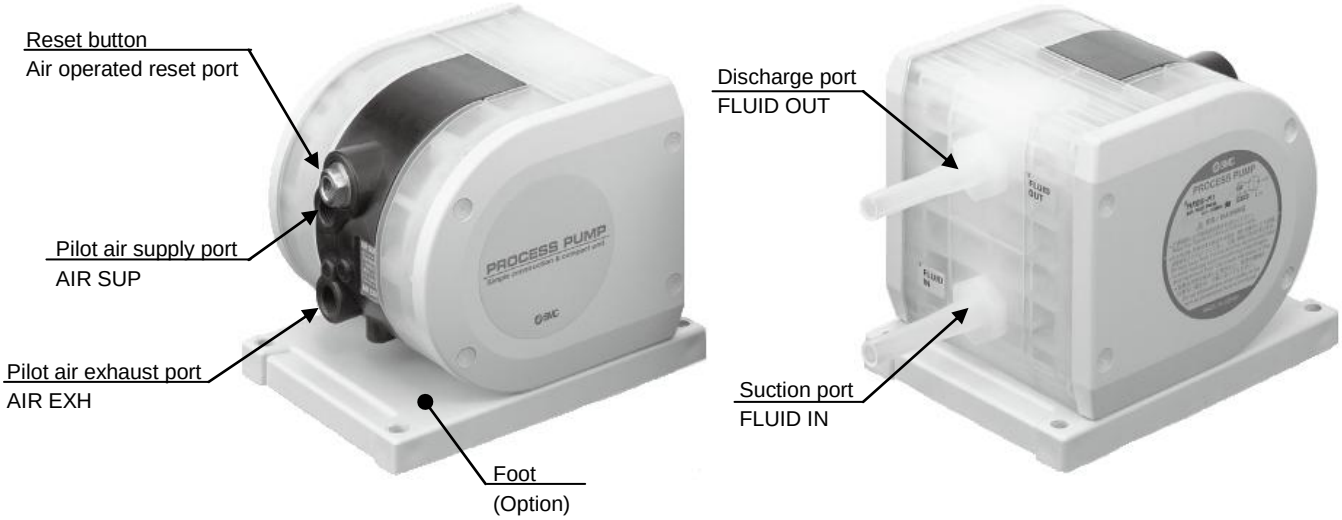

Description	Functions
Suction port (FLUID IN)	Sucks the fluid to be transferred. Connect suction piping.
Discharge port (FLUID OUT)	Discharges the fluid taken in the pump. Connect discharge piping.
Pilot air supply port (AIR SUP	Supplies air of set pressure. Connect the air piping.
Pilot air exhaust port (AIR EXH)	Exhausts pilot air.
Reset button, Air operated reset port	Resets the pump when operation is stopped.
Foot	Holds the product.

1. Precautions for system design

⚠Warning

1. Confirm the specifications.

- Give careful consideration to operating conditions such as the application, fluid and environment, and use the product within the operating ranges specified in this catalog.
- The product is provided for physical, chemical and industrial equipment.

2. Fluids

- For the compatibility between the materials composing the product and the fluids, check the compatibility check list. Since the compatibility of the fluid used may vary depending on its type, additives, concentration, temperature, etc., give sufficient consideration when selecting the material.
- For fluids other than those listed on the check list, please consult us. Also, use them within the range of the operating fluid temperatures.
- If foreign matters are mixed in the fluid, these may cause abrasion of the inside of the pump resulting in a problem. Use an appropriate filter (strainer) to remove them. In general, 80 to 100 mesh (150 to 180 μm) filters are recommended.
- When transferring a coagulable liquid, take measures to prevent it from coagulating in the pump.
- Precautions to observe when transferring slurry
  Basically, it is not recommended to transfer slurry because this will result in seating failure and wearing of the check valve and accumulation of particles. However, if you intend to increase the number of maintenance cycles even though this promotes wear and accumulation of particles, use a suction lift of no more than 1 m and also a slurry containing solid particles of the following diameter.
  If the specific gravity of the slurry is less than 3, use particles that have a diameter of no more than ø0.25 mm and have been passed through a #60 or finer mesh (e.g. aluminum powder).
  If the specific gravity of the slurry is 3 or more, use particles that have a diameter of no more than ø0.15 mm and have been passed through a #100 or finer mesh (e.g. iron powder)
- Take countermeasures to prevent the operating fluid from getting onto the body of the process pump.

3. Water hammer

If a valve is operated abruptly etc., a high pressure may be applied due to water hammer. Take measures to prevent pressures higher than specified from being applied.

<Examples of measures>

- Use a water hammer resistant valve to reduce the valve closing speed.
- Use an elastic piping material such as rubber hose or an accumulator to absorb the impact pressure.

4. Liquid seals

To ensure that fluid does not become sealed inside the process pump, when stopping the pump, relieve the discharge pressure inside it. As shown in the figure at right, make a circuit which has a relief valve installed on the system.

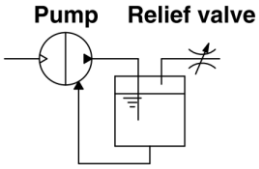

5. Fluid pressure supplied to the process pump

Feeding the fluid from the suction side into the pump under pressure, or drawing it using a negative pressure, will reduce the life of the pump.

6. Ensure space for maintenance.

Secure the space required for maintenance and inspection. Take into consideration also leakage from the product. When transferring a flammable liquid or a liquid that may affect the human body or environment, take measures including fire ban and keeping the area off limits.

7. Use a design which prevents reverse pressure and reverse flow.

If reverse pressure or reverse flow occurs on the discharge side of the process pump, the equipment is liable to become damaged or malfunction. Take safety measures in designing the circuit.

8. Measures against static electricity

Take measures against static electricity as static electricity may occur depending on the fluid. Particularly, when circulating flammable fluid through the pump, be sure to take measures to prevent the occurrence of static electricity.

9. The pump cannot transfer gas. Do not allow it to idle for a long time.
If the pump is operated for a long time without any fluid inside or in a gas-fluid mixed state, the diaphragm may be damaged or the life may be shortened. Do not continue idling for 3 minutes or longer.

10. Condensation and freezing of the pilot port
The location around the switching valve and the air exhaust port can cool down quickly due to expansion of the supply air, and this may cause condensation on the piping and the condensation may freeze during operation in winter. Take measures to ensure that water droplets from condensation are not splashed onto any electric parts or equipment.

11. Condensation and freezing of the directional control valve
Condensation and freezing may occur in the directional control valve due to the same cause as 10. Condensation and freezing of the pilot port. In this case, decrease the dew point of the supply air, decrease the pilot air pressure, or reduce the discharge air.

⚠Caution

1. Suspension of the pump operation
When operation is stopped exhaust the residual pressure of the air supply port using the 3-port solenoid valve. Stopping the process pump while air is supplied, load is applied to the internal parts and the life will be shortened. If the process pump is stopped consuming the residual pressure, the operation of the switching part of the pilot air in the process pump becomes unstable and may not be restarted. When the operation cannot be restarted, press the reset button or supply air to the air operated reset port.

2. Use the constant pilot air pressure.
The automatically operated type of some models adopts an air spring for the built-in air control circuit, and the pump may malfunction and stop when the pilot air pressure fluctuation exceeds 50 kPa.

3. Reverse flow
The check valve inside the process pump does not completely stop reverse flow (the flow from the discharge side to the suction side). For this reason, fluid may sometimes flow from the discharge side to the suction side when the pump is stationary, etc). As a countermeasure, install a 2-way valve or a check valve. However, please note that when a check valve is installed, if the cracking pressure is high, defective suction may occur. (As a guide, the cracking pressure should be 0.02 MPa or less.)

2. Mounting

⚠Caution

1. Read the operation manual before mounting the product.
Read the operation manual carefully and understand the contents before mounting the product. The manual should also be kept where it can be referred to whenever necessary.

2. Open the sealed package inside a clean room.
Products specified for clean room (PAP3310) are sealed and double packaged inside a clean room. We recommend that the inner package should be opened inside a clean room or clean environment.

3. Confirm the mounting orientation of the product.
Face the foot downward. Even when the foot is not used, the foot faces downward.
Also, secure all specified mounting positions when using the product.
If the propagation of the vibration of the pump is not acceptable, insert vibro-isolating rubber when mounting.

3. Piping

⚠Caution

1. Flush the piping.
Flush and clean the piping before connecting the product. Any dirt or scale and the like left in the piping may cause malfunction or failure.

2. Use fittings with resin threads when connecting piping to the product with resin threads at the ports.
Using fittings with metal threads may cause damage to the ports.

3. Tighten screws with proper tightening torque.

When screwing fittings into the product, tighten them with proper tightening torque as shown below. Looseness can cause problems such as fluid and air leaks, while over tightening can cause damage to threads and parts, etc.

Connection thread	Proper tightening torque (N·m)
Rc, NPT, G, PNTF 1/4”	1.5 to 2
Rc, NPT, G, PNTF 3/8”	2 to 2.5

4. Air Supply

⚠Warning

1. Use clean air.

Do not use compressed air that includes chemicals, synthetic oils containing organic solvents, salinities or corrosive gases, etc., as it can cause damage or malfunction.

2. Pay attention to avoid freezing when operating the product in low temperatures.

The equipment operates while expanding the compressed air. During this time, the temperature inside the product decreases due to adiabatic expansion. If the ambient temperature is low, using compressed air containing a lot of moisture may cause freezing because heat cannot be gained from the surroundings. In this case, take freeze prevention measures by using a membrane air dryer (such as series IDG).

⚠Caution

1. Quality of operating air

- Use air filtered by air filter AFF series or mist separator AM series, etc. Use the water separator (AMG, etc.) when necessary. Use of a super mist separator (such as series AME) is recommended to extend maintenance intervals. (Equivalent to No. C to E on the page P2 to 3 of Best Pneumatics 6.
- Use of humid air may cause condensation inside the body. Use air which has been treated by a refrigerated air dryer (such as IDF series) when condensation occurs.
- When dew forming or freezing occur in the process pump, use the membrane air dryer (IDG) and decrease the dew point of supply air.
- If a pump is operated by super dry air and N2 gas, etc., the deterioration of the gaskets inside the switching valve will be accelerated and may result in substantially shortening the life span of the product.

5. Operating environment

⚠Warning

1. Do not use in the following environments, as this can cause failure.

1) Locations with an atmosphere of corrosive gases, organic solvents or chemical solutions, and where there may be contact with the same.
2) Locations where there is contact with sea spray, water or steam.
3) Locations where ultraviolet deterioration or overheating of resin may occur due to direct sunlight.
4) Locations near heat sources with poor ventilation (heat sources should be shielded by heat insulating material).
5) Locations with impact or vibration.
6) Locations with excessive moisture and dust.

2. The product cannot be used under water.

Do not use the product immersing it in water (liquid). Otherwise, liquid will enter the openings inside the product, resulting in malfunction.

3. Compressed air with low dew point

Using super dry air as the fluid may affect the reliability (service life) of the equipment, because the lubrication characteristics inside the equipment will deteriorate. Please consult with SMC when using it.

6. Maintenance

⚠Warning

1. Perform maintenance after consulting the operation manual.
Obtain the operation manual for the equipment from SMC or our distributor and have sufficient knowledge of the equipment before performing maintenance. Incorrect handling may cause damage or malfunction of the equipment or system.

2. Perform maintenance work after confirming the safety of the system.
Turn off the compressed air and power supply and exhaust any remaining compressed air in the system before removing the equipment and the compressed air supply/exhaust unit. Discharge the residual liquid or sufficiently displace it as necessary. Also, when reinstalling the equipment or restarting it after replacement, confirm the safety of the product before checking that it operates normally.

3. Use appropriate protective equipment.
When touching the process pump for maintenance, wear protective equipment such as gloves which are compatible with the fluid used. There is a risk of chemical burns.

4. Do not disassemble the product, as disassembly will invalidate the product's warranty.
When disassembly is necessary, please consult with SMC or our distributor.

5. Drain discharge
Operating the system with drain accumulated in the equipment or piping may cause malfunction of the equipment, splash over into the downstream side, or unexpected accident. Periodically discharge drain from components including the air filter.

6. Caution when transferring a high-temperature fluid
The product itself will become hot due to the high-temperature fluid. Since touching the product directly may cause burns, allow sufficient time for the product to cool down when transferring a high-temperature fluid. The measurement of the product temperature is recommended to confirm the safety of the system before performing work.

⚠Caution

1. Caution when transferring a highly penetrating liquid
When transferring a liquid that is highly penetrating through fluoropolymer, components of the transfer liquid may enter the openings inside the equipment. Also, they may become attached to the external surface of the equipment. In this case, take the same measures as handling the transfer liquid.

2. Service life of diaphragm and maintenance of consumable items
- Disassembly of the process pump is not recommended. Replacement with new process pump based on the reference life of the diaphragm is recommended.
- If the operating cycle of the process pump exceeds the service life of diaphragm, the diaphragm may be damaged due to deterioration. If it is damaged, the fluid will leak from the pilot air exhaust port and the air will blow out into the liquid circuit. Consider the pump operation (breathing, decline of discharge pressure, etc.) and the reference service life of diaphragm, and replace with new process pump or conduct necessary maintenance as early as possible.
- Items such as check valves, switching valves, pilot valves and manual caps may experience malfunction earlier than the diaphragm depending on the operating conditions. Please replace with new process pump or conduct periodic maintenance.
- When conducting maintenance, obtain the necessary parts indicated in the maintenance parts list (Refer to P.14), and perform work according to the maintenance and operation manuals.

[Calculation of reference service life (days) of diaphragm]

$$\text{Reference Service life (days)} = \frac{\text{A (amount of discharge per cycle) x B (reference number of cycles in service life)}}{\text{Flow (L/min) x Operating time per day (hour) x 60 (min)}}$$

Model	Operating conditions: Method	Diaphragm material	Amount of discharge per cycle A	Reference number of cycles in service life B	Volume inside pump (wetted part)
PA(P)3310	Automatically operated type	PTFE	Approx. 0.025 L	50 million cycles	Approx. 85 mL

3. Please understand the following concerning the inability to repair the product.
To enable the process pump to be used with various fluids, please note that from the aspects of ensuring worker safety and also the facilities, SMC is unable to carry out repair.

7. Caution on Handling

⚠Caution

1. If lubricating a pump, use turbine oil (ISO VG 32), and be sure to continue lubricating the pump.

⚠Warning

1. Test before using with the actual equipment.
Test the pump before using it with the actual equipment. Even if there is no problem in a short-term test, the liquid may penetrate through the fluoropolymer diaphragm causing malfunction in the pump air circuit.

2. Storage
In the case of long-term storage after use, first thoroughly remove the liquid, and clean and dry the inside to prevent deterioration of the pump materials.

3. After a long period of non-use, perform a trial run prior to operation.

Applicable Fluids

Material and Fluid Compatibility Check List for Process Pumps

- The data below is prepared based on data provided by the material manufacturers.
- SMC assumes no responsibility for the accuracy of the data or for any damages arising from the data.
- The material and fluid compatibility check list provides reference values as a guide only; therefore SMC does not guarantee the application to our product.

⚠ Caution

1. Select the wetted parts materials according to the transfer liquid you use to determine the model.
   - For the diaphragm material, PTFE is suitable for non-permeating liquids.
   - Use fluids that will not corrode the wetted parts materials.
2. These products are not suitable for medical or food use.
3. The applicability may vary depending on additives. Take note also of additives.
4. The applicability may vary depending on impurities. Take note also of impurities.
5. Examples of transfer liquids are shown below. Since the applicability may vary depending on your operating conditions, be sure to check it by means of experimentation.
6. Compatibility is indicated for fluid temperatures specified for the respective products (100˚C or less).

Table symbols
○: Can be used. ×: Cannot be used. ー: Can be used under certain conditions. Please consult us.

Model			PA3310	PAP3310
Body material			New PFA	
Diaphragm material			PTFE	
Examples of applicable liquids	**Water**	**Tap water**	○	
		Pure water	○	
	Oil	**Turbine oil**	○	
		Cutting oil	○	
		Brake oil	○	
	Solvent	**Flux**	○	
		Toluene	○ Note 1, 2)	
		Methyl ethyl ketone	○ Note 1, 2)	
		Acetone	○ Note 1, 2)	
		Inert solvent	○	
	Ethyl alcohol		○ Note 1, 2)	
	Isopropyl alcohol		○ Note 1, 2)	
	Sodium hypochlorite		○ Note 1, 2)	
	Cleaning fluids		-	
	Acids		×	
	Alkalis		×	
	Metal corrosive liquid		×	
	Highly permeating liquid		×	
	Highly penetrating liquid		×	

Note 1) Static electricity may be generated. Take measures to prevent static electricity.
Note 2) These may be penetrated by fluids, and the penetrating fluids may affect parts of other materials.

⚠ Caution

Caution for transferring highly penetrating liquids

Do not use liquids which are highly penetrating to fluorine resin. This may cause internal damage to the process pump or liquid leakage.

Specifications

Model		PA3310	PAP3310
Actuation		Automatically operated	
Port size	**Main fluid suction discharge port**	Rc, NPT, G, NPTF 3/8" Female thread	Rc, NPT, G, NPTF 3/8" Female thread 3/8", 1/2" Tube extension With nut (size 3, 4, 5) 3/8", 1/2" Integrated fitting type
	Pilot air supply/exhaust port	Rc, NPT, G, NPTF 1/4" Female thread	
Material	**Body wetted areas**	New PFA	
	Diaphragm	PTFE	
	Check valve	PTFE, New PFA	
Discharge rate		1 to 13L/min Note)	
Average discharge pressure		0 to 0.4MPa	
Pilot air pressure		0.2 to 0.5MPa	
Air consumption		140 L/min (ANR) or less	
Suction lifting range	**Dry**	0.5 m (Interior of pump dry)	
	Wet	Up to 4 m (liquid inside pump)	
Noise		80 dB (A) or less (Option: with silencer, AN20)	
Maximum withstand pressure		0.75MPa	
Diaphragm life		50 million times	
Fluid temperature		0 to 100°C (No freezing, heat cycle not applied)	
Ambient temperature		0 to 100°C (No freezing, heat cycle not applied)	
Maximum viscosity		1000mPa･s	
Weight		2.1 kg (without foot)	
Mounting orientation		Horizontal (with mounting foot at bottom)	
Packaging		General environment	Clean double packaging

∗ Each value of above represents at normal temperatures with fresh water.
Note) The discharge rates for PAP3310-P11, PAP3310S-□S11, PAP3310S-□S1113, PAP3310S-□S1311, PAP3310-S11 are between 1 to 12 L/min.

Performance Curve

Flow Rate Characteristics

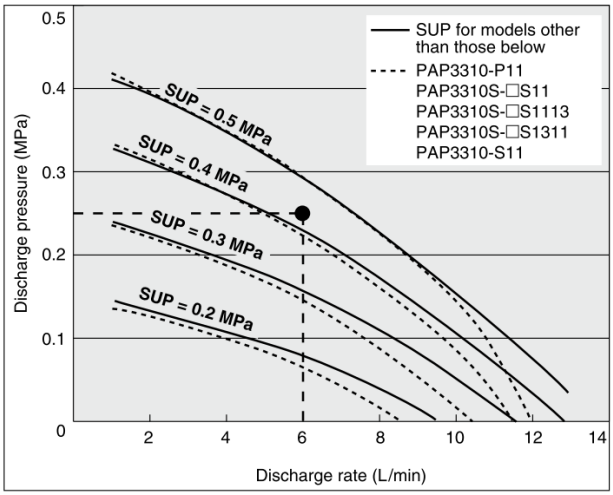

Air Consumption

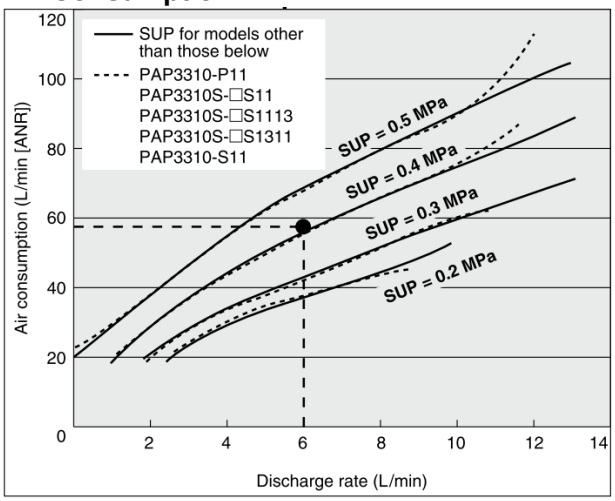

Selection from Flow Rate Characteristic Graph (PA(P)3310)

Required specifications example:

Find the pilot air pressure and pilot air consumption for a discharge rate of 6 L/min and a discharge pressure of 0.25 MPa. <The transfer fluid is fresh water (viscosity 1 mPa·s, specific gravity 1.0).

∗ If the total lifting height is required instead of the discharge pressure, a discharge pressure of 0.1 MPa corresponds to a total lift of 10 m.

Selection procedures:

1. First mark the intersection point for a discharge rate of 6 L/min and a discharge pressure of 0.25 MPa.
2. Find the pilot air pressure for the marked point. In this case, the point is between the discharge curves (solid lines) for SUP = 0.4 MPa and SUP = 0.5 MPa, and based on the proportional relationship to these lines, the pilot air pressure for this point is approximately 0.43 MPa.
3. Next find the air consumption rate. Find the intersection point for a discharge rate of 6 L/min and a discharge curve (solid line) for SUP = 0.43 MP a. Draw a line from this point to the Y axis to determine the air consumption rate. The result should be approx. 58 L/min (ANR).

⚠ Caution

1. These flow rate characteristics are for fresh water (viscosity 1 mPa·s, specific gravity 1.0).
2. Flow characteristic is measured based on necessary minimum piping.
3. The discharge rate differs greatly depending on properties (viscosity, specific gravity) of the fluid being transferred and operating conditions (lifting range, transfer distance), etc.

Viscosity Characteristics (Flow rate correction for viscous fluids)

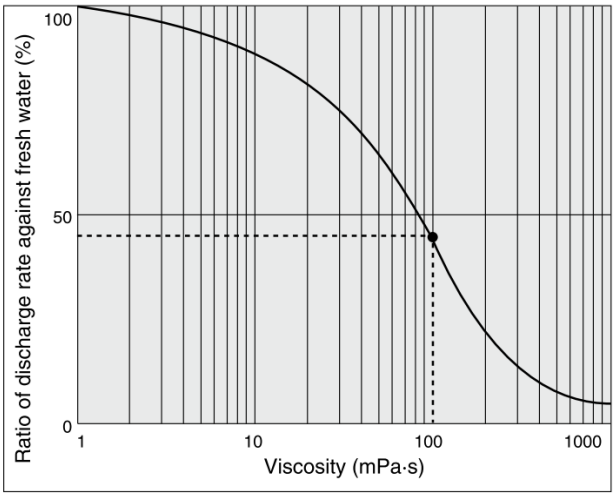

Selection from Viscosity Characteristic Graph

Required specifications example:
Find the pilot air pressure and pilot air consumption for a discharge rate of 2.7 L/min, and a viscosity of 100 mPa·s.

Selection procedures:

1. First find the ratio of the discharge rate for fresh water when viscosity is 100 mPa·s from the graph below. It is determined to be 45%.
2. Next, in the required specification example, the viscosity is 100 mPa·s and the discharge rate is 2.7 L/min. Since this is equivalent to 45% of the discharge rate for fresh water, 2.7 L/min ÷ 0.45 = 6 L/min, indicating that a discharge rate of 6 L/min is required for fresh water.
3. Finally, find the pilot air pressure and pilot air consumption based on selection from the flow characteristic graphs.

⚠ Caution

Viscosities up to 1000 mPa·s can be used.
Viscosity and dynamic viscosity are obtained by the formulas below.

$$\text{Dynamic viscosity } v[m^2/s] = \frac{\text{Viscosity } \mu[Pa \cdot s]}{\text{Density } \rho[kg/m^3]}$$

Formulas below can be used for common units

- 1cP = 1mPa·s = 10^{-3}Pa·s
- 1cSt = 1mm^2/s = 10^{-6}m^2/s

Working Principle

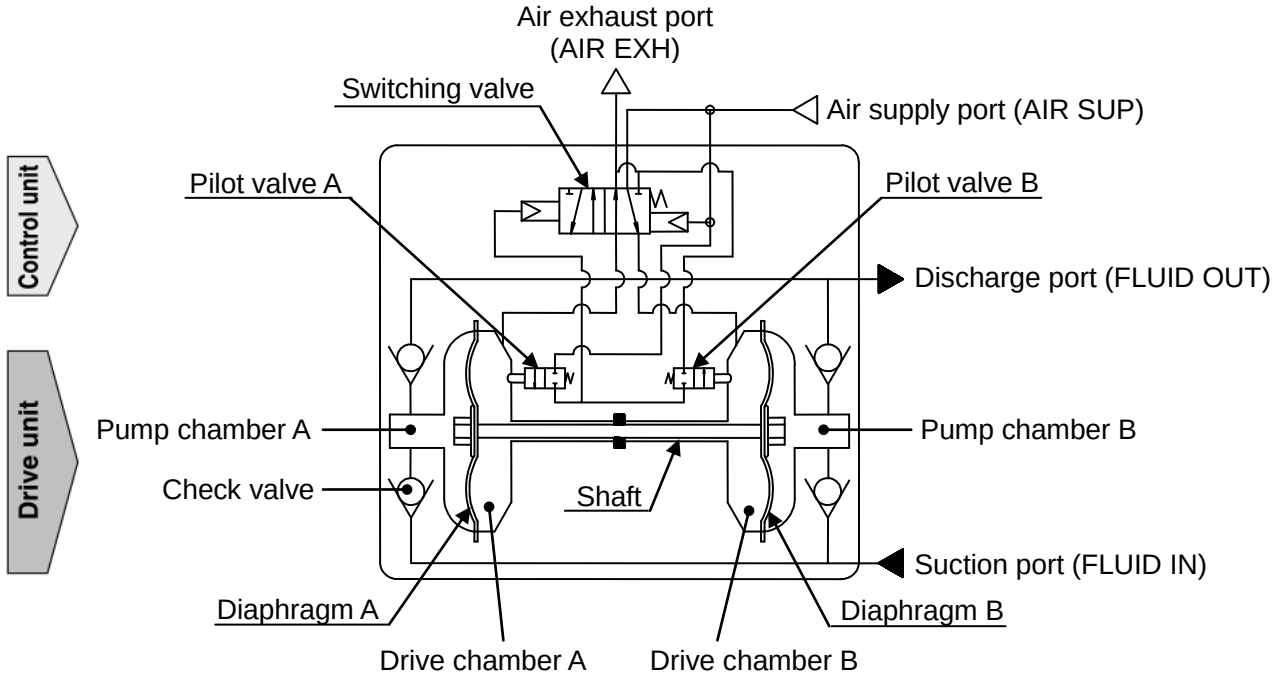

Control unit

1. When air is supplied, it passes through the switching valve and enters drive chamber B.
2. Diaphragm B moves to the right, and at the same time diaphragm A also moves to the right pushing pilot valve A.
3. When pilot valve A is pushed, air acts upon the switching valve, drive chamber A switches to a supply state, and the air which was in drive chamber B is exhausted to the outside.
4. When air enters drive chamber A, diaphragm B moves to the left pushing pilot valve B.
5. When pilot valve B is pushed, the air which was acting upon the switching valve is exhausted, and drive chamber B once again switches to a supply state. A continuous reciprocal motion is generated by this repetition.

Drive unit

1. When air enters drive chamber B, the fluid in pump chamber B is forced out, and at the same time fluid is sucked into pump chamber A.
2. When the diaphragm moves in the opposite direction, the fluid in pump chamber A is forced out, and fluid is sucked into pump chamber B.
3. Continuous suction and discharge is performed by the reciprocal motion of the diaphragm.

Maintenance Parts

⚠ **- It is not recommended to disassemble the process pump. However, if this is necessary, be sure to follow the instructions in the maintenance procedure.**
- When carrying out this work, wear appropriate protective equipment.

Description	PA3310	PAP3310
Diaphragm kit	KT-PA3-531	KT-PAP3-531
Check valve kit	KT-PA3-536#1	KT-PAP3-536#1
Pilot valve kit	KT-PA3-538	
Manual cap assembly kit	KT-PA3-545□ Note)	
Foot kit	KT-PA3-40	KT-PAP3-40

∗ The maintenance procedure is to be distributed individually. Please contact your SMC sales representative for details.
Note) One of Nil, N, F or T is entered as a thread symbol.

Piping and Operation

⚠Caution

Mounting posture of the pump is set with the mounting foot facing downward. Air to be supplied to the air supply port <AIR SUP> should be cleaned and filtered through AF filter, etc. Air with foreign matter or drainage etc. will have negative effects on the built-in directional control valve and will lead to malfunction. When air needs additional purification, use a filter (AF series), and a mist separator (AM series) together. Maintain the proper tightening torque for fittings and mounting bolts, etc. Looseness can cause problems such as fluid and air leaks, while over tightening can cause damage to threads and parts, etc.

Starting and Stopping Refer to circuit example (1)

1. Connect air piping to the air supply port <AIR SUP> and connect piping for the fluid to be transfered to the suction port <FLUID IN> and the discharge port <FLUID OUT>.
2. Using a regulator, set the pilot air pressure within the range of 0.2 to 0.5 MPa. Then, the pump operates when power is applied to the 3 port solenoid valve of the air supply port <AIR SUP>, the sound of exhaust begins from the air exhaust port <AIR EXH> and fluid flows from the suction port <FLUID IN> to the discharge port <FLUID OUT>.
   At this time, the throttle on the discharge side is in an open state. The pump performs suction with its own power even without priming. (Dry state suction lifting range: up to 0.5 m) To restrict exhaust noise, attach a silencer (AN20-02: option) to the air exhaust port <AIR EXH>.
3. To stop the pump, exhaust the air pressure being supplied to the pump by the 3 port solenoid valve of the air supply port <AIR SUP>. The pump will also stop if the throttle on the discharge side is closed.

Discharge Flow Rate Adjustment

1. To adjust the flow rate from the discharge port <FLUID OUT>, use the throttle connected to the discharge side. Refer to circuit example (1). Note that this product cannot be used as a fixed quantity liquid dispense pump.
2. When operating with a discharge flow rate below the specification range, provide a by-pass circuit from the discharge side to the suction side to ensure the minimum flow rate inside the process pump. With a discharge flow rate below the minimum flow rate, the process pump may stop due to unstable operation. Refer to circuit example (2). (Minimum flow rates: 1 L/min)

<Reset Button>

When the pump stops during operation, press the reset button. This makes it possible to restore operation in case the switching valve be-comes clogged due to foreign matter in the supply air.

<Air Operated Reset Port>

It is possible to restore operation by supplying air to the air operated reset port without directly pressing the reset button, such as by remote control. Pressure equivalent to or greater than pilot air pressure (but less than 0.5 MPa) is required to reset air. Refer to air operated reset circuit example (3).

Circuit example (1)

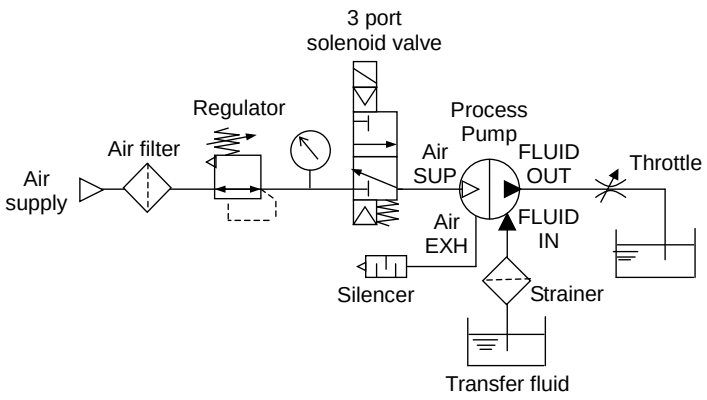

Circuit example (2)

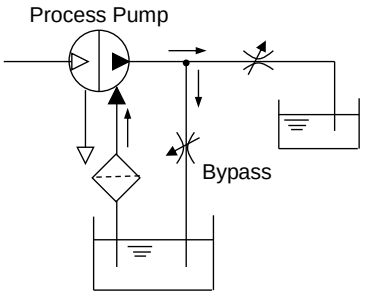

Circuit example (3)

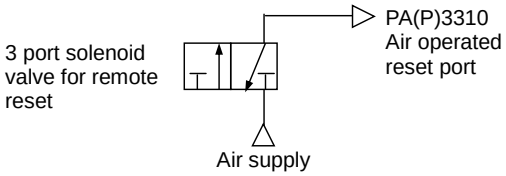

Dimensions

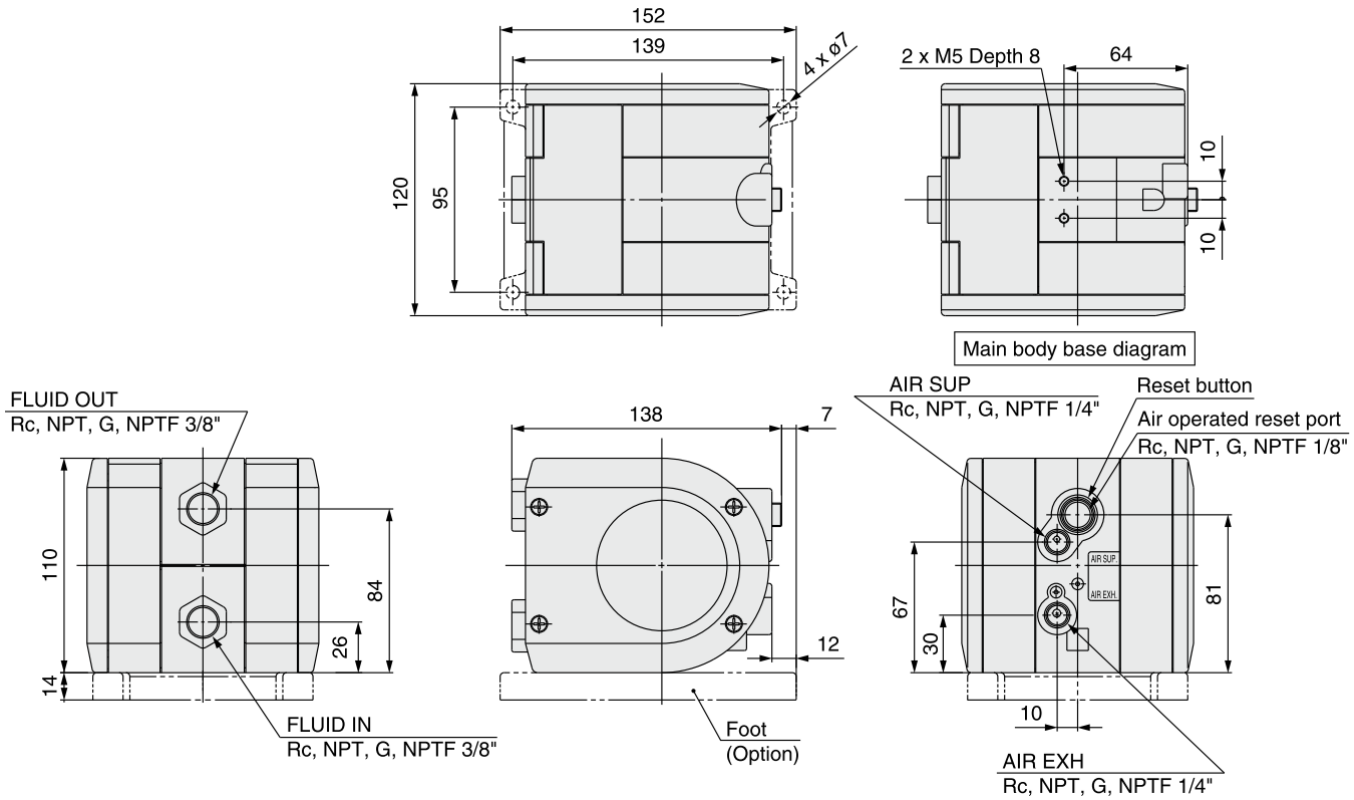

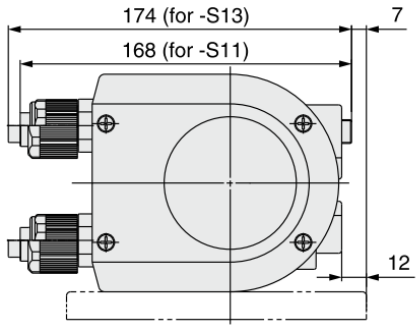

Integrated fitting type

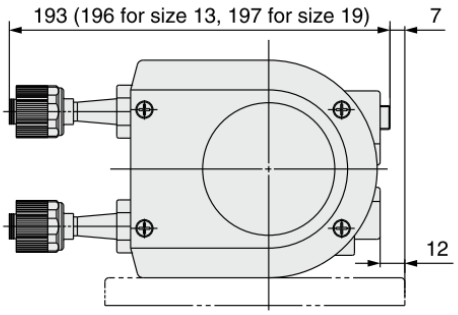

With nut

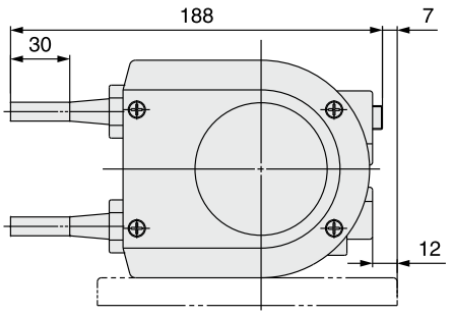

Tube extension

Revision
24-Sep-2019 Revision F - Completely revised by format change.

SMC Corporation
4-14-1, Sotokanda, Chiyoda-ku, Tokyo 101-0021 JAPAN
Tel: + 81 3 5207 8249 Fax: +81 3 5298 5362
URL https://www.smcworld.com

Note: Specifications are subject to change without prior notice and any obligation on the part of the manufacturer.
© 2019 SMC Corporation All Rights Reserved