Doc. No. DIU-10D00-OM002-G

Operation Manual

PRODUCT NAME

Rotary Table

MODEL / Series / Product Number

MSQ∗10 to 50∗

SMC Corporation

Contents

Safety Instructions	2
Outline	18
How to order	18
Specifications	20
Weight	22
Effective torque	22
Internal construction and parts	23
Basic circuit	26
Circuit structure	26
Recommended models	26
Mounting	27
Load restrictions	27
Bolts for mounting product	27
Rotation direction and rotation angle	30
Rotating range example	31
Special angle adjustment tool	33
Angle adjustment using the special tool	33
Piping	34
Air supply	34
Setting of rotation time	35
Moment of inertia	35
Calculation formulae for moment of inertia	36
Kinetic energy	37
Auto switch	38
Internal structure and operation principle	38
Mounting of auto switch	38
Auto switch proper mounting position at rotation end	39
Maintenance and Inspection	40
Regular check	40
Replacement procedure of the seal kit	40
Specific product precautions	50
Troubleshooting	53

Safety Instructions

These safety instructions are intended to prevent hazardous situations and/or equipment damage. These instructions indicate the level of potential hazard with the labels of **"Caution," "Warning"** or **"Danger."** They are all important notes for safety and must be followed in addition to International Standards (ISO/IEC)*1), and other safety regulations.

*1) ISO 4414: Pneumatic fluid power - General rules and safety requirements for systems and their components
ISO 4413: Hydraulic fluid power - General rules and safety requirements for systems and their components
IEC 60204-1: Safety of machinery - Electrical equipment of machines - Part 1: General requirements
ISO 10218-1: Robots and robotic devices - Safety requirements for industrial robots - Part 1:Robots
etc.

Danger	**Danger** indicates a hazard with a high level of risk which, if not avoided, will result in death or serious injury.
Warning	**Warning** indicates a hazard with a medium level of risk which, if not avoided, could result in death or serious injury.
Caution	**Caution** indicates a hazard with a low level of risk which, if not avoided, could result in minor or moderate injury.

Warning

1. **The compatibility of the product is the responsibility of the person who designs the equipment or decides its specifications.**
   Since the product specified here is used under various operating conditions, its compatibility with specific equipment must be decided by the person who designs the equipment or decides its specifications based on necessary analysis and test results. The expected performance and safety assurance of the equipment will be the responsibility of the person who has determined its compatibility with the product. This person should also continuously review all specifications of the product referring to its latest catalog information, with a view to giving due consideration to any possibility of equipment failure when configuring the equipment.
2. **Only personnel with appropriate training should operate machinery and equipment.**
   The product specified here may become unsafe if handled incorrectly. The assembly, operation and maintenance of machines or equipment including our products must be performed by an operator who is appropriately trained and experienced.
3. **Do not service or attempt to remove product and machinery/equipment until safety is confirmed.**
   1. The inspection and maintenance of machinery/equipment should only be performed after measures to prevent falling or runaway of the driven objects have been confirmed.
   2. When the product is to be removed, confirm that the safety measures as mentioned above are implemented and the power from any appropriate source is cut, and read and understand the specific product precautions of all relevant products carefully.
   3. Before machinery/equipment is restarted, take measures to prevent unexpected operation and malfunction.
4. **Our products cannot be used beyond their specifications. Our products are not developed, designed, and manufactured to be used under the following conditions or environments. Use under such conditions or environments is not covered.**
   1. Conditions and environments outside of the given specifications, or use outdoors or in a place exposed to direct sunlight.
   2. Use for nuclear power, railways, aviation, space equipment, ships, vehicles, military application, equipment affecting human life, body, and property, fuel equipment, entertainment equipment, emergency shut-off circuits, press clutches, brake circuits, safety equipment, etc., and use for applications that do not conform to standard specifications such as catalogs and operation manuals.
   3. Use for interlock circuits, except for use with double interlock such as installing a mechanical protection function in case of failure. Please periodically inspect the product to confirm that the product is operating properly.

Safety Instructions

⚠ Caution

We develop, design, and manufacture our products to be used for automatic control equipment, and provide them for peaceful use in manufacturing industries.
Use in non-manufacturing industries is not covered.
Products we manufacture and sell cannot be used for the purpose of transactions or certification specified in the Measurement Act.
The new Measurement Act prohibits use of any unit other than SI units in Japan.

Limited warranty and Disclaimer/Compliance Requirements

The product used is subject to the following “Limited warranty and Disclaimer” and “Compliance Requirements”. Read and accept them before using the product.

Limited warranty and Disclaimer

1. The warranty period of the product is 1 year in service or 1.5 years after the product is delivered, whichever is first.*2)
   Also, the product may have specified durability, running distance or replacement parts. Please consult your nearest sales branch.
2. For any failure or damage reported within the warranty period which is clearly our responsibility, a replacement product or necessary parts will be provided.
   This limited warranty applies only to our product independently, and not to any other damage incurred due to the failure of the product.
3. Prior to using SMC products, please read and understand the warranty terms and disclaimers noted in the specified catalog for the particular products.

***2) Vacuum pads are excluded from this 1 year warranty.**
A vacuum pad is a consumable part, so it is warranted for a year after it is delivered.
Also, even within the warranty period, the wear of a product due to the use of the vacuum pad or failure due to the deterioration of rubber material are not covered by the limited warranty

Compliance Requirements

1. The use of SMC products with production equipment for the manufacture of weapons of mass destruction (WMD) or any other weapon is strictly prohibited.
2. The exports of SMC products or technology from one country to another are governed by the relevant security laws and regulations of the countries involved in the transaction. Prior to the shipment of a SMC product to another country, assure that all local rules governing that export are known and followed.

Design / Selection

⚠ Warning

1. **Confirm the specifications.**
   Products represented in this catalog are designed only for use in compressed air systems.
   Do not operate at pressures or temperatures, etc., beyond the range of specifications, as this can cause damage or malfunction. (Refer to the specifications.)
   We do not guarantee against any damage if the product is used outside of the specification range.
2. **If the operation involves load fluctuations, ascending/descending movements, or changes in friction resistance, make sure to provide safety measures.**
   Operating speed will increase, and bodily injury may occur, or damage to the machinery itself may occur.
3. **If there is a chance that the product will pose a hazard to humans, install a protective cover.**
   If the moving portion of the product will pose a hazard to humans or will damage machinery or equipment, provide a construction that prevents direct contact with those areas.
4. **Be certain that the secured portions will not loosen.**
   Be certain to adopt a reliable connecting method if the rotary table is used very frequently or if it is used in a location that is exposed to a large amount of vibrations.
5. **There may be cases in which a speed reduction circuit or a shock absorber is required.**
   If the driven object moves at high speeds or is heavy, it will be unfeasible for only the rotary table's cushion to absorb the shock. Therefore, provide a speed-reduction circuit to reduce the rotary table's speed before the thrust is applied to the cushion, or an external shock absorber to dampen the shock. If these countermeasures are taken, make sure to take the rigidity of the mechanical equipment into consideration.
6. **Consider the possibility of a reduction in the circuit air pressure caused by a power failure.**
   When a rotary table is used as clamping mechanism, there is a danger of workpiece dropping if there is a decrease in clamping force, due to a drop in circuit pressure caused by a power failure. Therefore, safety equipment should be installed to prevent damage to machinery and bodily injury.
7. **Consider the possibility of power source related malfunctions that could occur.**
   For the machinery equipment that rely on power sources such as compressed air, electricity, or hydraulic pressure, adopt countermeasure to prevent the equipment from causing a hazard to humans or damage to the machinery and equipment in the event of malfunction.
8. **If a speed controller is provided in the exhaust restrictor, implement a safety design taking the residual pressure into consideration.**
   If air pressure is applied to the air supply side without residual pressure in the exhaust side, the rotary table will operate at abnormally high speeds, which could pose a hazard to humans and damage the machinery and equipment.
9. **Consider the behavior of the rotary table in the event of an emergency stop.**
   Devise a safe system so that if a person engages the emergency stop, or if a safety device is tripped during a system malfunction such as a power failure, the movement of the rotary table will not cause a hazard to humans or damage the equipment.
10. **Consider the action of the rotary table when restarting after an emergency stop.**
    Devise a safe design so that the restarting of the rotary table will not pose a hazard to humans or damage the equipment. Install manually controlled equipment for safety when the rotary table has to be reset to the starting position.
11. **Do not use the product as a shock absorber.**
    If an abnormal pressure or air leakage occurs, the rotary table's speed reduction capability could become severely affected, which could pose a hazard to humans and damage the machinery and equipment.

12. **Select a speed within the product's allowable energy value.**
If the product's kinetic energy of the load exceeds the allowable value, it could damage the product, and cause a hazard to humans and damage the machinery and equipment.
13. **Provide a shock absorber if the kinetic energy that is applied to the product exceeds the allowable value.**
If the product's kinetic energy exceeds the allowable value, it could damage the product, and cause a hazard to humans and damage the machinery or equipment.
14. **Do not stop or hold the product at midpoint by keeping air pressure in the product. (Air balancers etc.)**
For a product lacking an external stopping mechanism, if the directional control valve is closed to keep the air pressure in the product, in an attempt to stop the product at midpoint, it might not be possible to maintain that stopped position due to an air leakage. As a result, it could pose a hazard to humans and cause damage to machinery and/or equipment.
15. **Do not use two or more rotary tables with the aim of synchronized movement.**
One of the rotary tables may bear the load of operation, making synchronized movement impossible, and possibly leading to deformation of the equipment.
16. **Do not use in a location where adverse effect could be occurred by the oozing of the lubricant to the exterior.**
The lubricant coating the interior of the product may leak to the outside of the product from connecting parts of the rotary body, cover, etc.
17. **Do not disassemble the product or make any modifications, including additional machining.**
This may cause human injury and/or an accident.
18. **Refer to the Auto Switches Precautions for using with an auto switch.**

⚠ Caution

1. **Do not use below the speed adjustment range specified for the product.**
If the product is used below the specified speed adjustment range, it could cause the product to stick, slip, or the movement to stop.
2. **Do not apply an external torque to the product that exceeds the rated output.**
If an external force that exceeds the product's rated output is applied to the product, it could damage the product.
3. **The holding torque of the rotating end of the double piston type**
If the internal piston of a double piston product comes in contact with the angle adjustment screen or the cover and stops, the holding torque at the rotating end is one half of the actual output.
4. **If it is necessary to provide repeatability of the rotation angle, directly stop the load externally.**
Even with a product that is equipped with an angle adjuster, there are times when the initial rotation angle could change.
5. **Do not use under hydraulic pressure.**
The product will be damaged if it is used by applying hydraulic pressure.
6. **There is a possibility of backlash being generated when stopping the double piston style in the middle with a valve of the closed center type.**
7. **Do not use in a places where there are many temperature fluctuations.**
When using in lower temperature applications, use caution so that frost does not occur inside the cylinder or the piston rod.
Operation may be unstable.
8. **Adjust the speed control in the environment in which it will be used in.**
Speed adjustment may be changed if the environment is different.

Mounting

⚠ Warning

1. **Operation manual**
   Install the product and operate it only after reading the operation manual carefully and understanding its contents. Also, keep the manual in a location where it can be referred to as necessary.
2. **Ensure sufficient space for maintenance activities.**
   When installing the products, allow access for maintenance.
3. **Tighten threads with the proper tightening torque.**
   When installing the products, follow the listed torque specifications.
4. **Before adjusting the angle by supplying air pressure, take appropriate measures to prevent the equipment from rotating unnecessarily.**
   When an adjustment is performed under air pressure, the equipment could rotate and fall during the adjustment, depending on the mounted posture of the equipment. As a result, it could pose a hazard to humans and damage the machinery and equipment.
5. **Do not loosen the angle adjustment screw beyond the allowable adjustment range.**
   The angle adjustment screw could fall out if it is loosened beyond its allowable adjustment range, which could pose a hazard to humans and damage the machinery and equipment.
6. **Do not place a magnetic object near the product.**
   The auto switch is a magnetic sensing type. If a magnetic object is placed close to it, the rotary table could operate suddenly, which could pose a hazard to humans and damage the machinery and equipment.
7. **Do not perform additional machining to the product.**
   Additional machining to the product can result in insufficient strength and cause damage to the product. This can lead to possible human injury and damage to the surrounding equipment.
8. **Do not enlarge the fixed throttle by modifying the pipe connectors.**
   If the hole diameter is enlarged, the product's rotation speed will increase, causing the shock force to increase and damage to the product. As a result, it could pose a hazard to humans and damage the machinery and equipment.
9. **If shaft couplings are used, use those with angular freedom.**
   If shaft couplings that lack angular freedom are used, they could scrape due to eccentricity, leading to equipment malfunction and product damage. As a result, it could pose a hazard to humans and damage the machinery and equipment.
10. **Do not apply to the shaft a load that exceeds the values given in a catalog.**
    If a load that exceeds the allowable value is applied to the product, it could lead to equipment malfunction, a hazard to humans and damage to the machinery and equipment. Provided that a dynamic load is not generated, a load that is within the allowable radial / thrust load can be applied. However, applications in which the load is applied directly to the shaft should be avoided whenever possible. The methods such as those described below are recommended to prevent the load from being applied directly to the shaft in order to ensure a proper operating condition.

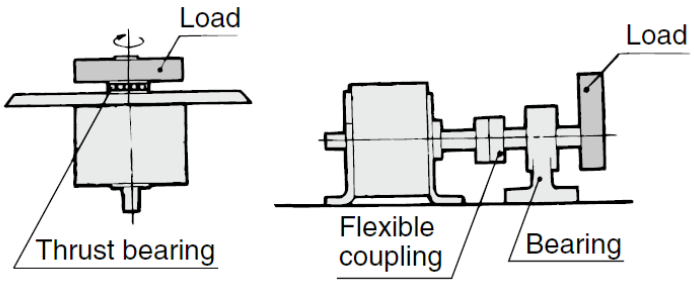

11. **Do not use springs, etc., to add force in the rotational movement direction.**
    When rotational force from an external spring, etc., acts and generates negative pressure on the product's interior, breakage of the internal seal or acceleration of abrasion may occur.

12. Place an external stopper in a position that is away from the rotating table.

If the stopper is placed near the rotating table, the torque that is generated by the product itself will cause the reaction force which is directed to the stopper to be redirected and applied to the rotating table. This will lead to the breakage of the rotating table and bearing. As a result, it could pose a hazard to humans and damage the machinery and equipment.

Precautions when Using External Stoppers

- Be sure to install external stoppers in the proper places. Installation in the wrong place can result in equipment breakage, which could damage other equipment or cause human injury.

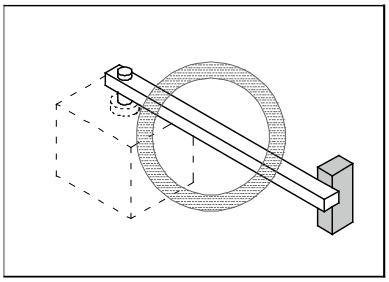

Install the stopper at a sufficient distance from the rotating shaft.

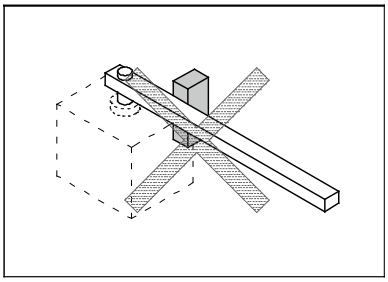

The external stopper becomes a fulcrum, resulting in the load's inertia force being applied to the table as a being moment.

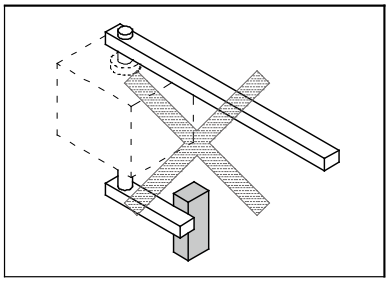

If an external stopper is installed on the opposite side of the load, the inertia force generated by the load is applied directly to the table.

- Install external stoppers within the range of the rotating angle.
  Installing an external stopper at the maximum rotation angle may result in an inability to fully absorb the kinetic energy generated, and damage to equipment may occur.
- Angle adjustment is available for this product. When using an external stopper, set in a position so that that the adjusting bolt does not collide into the piston.

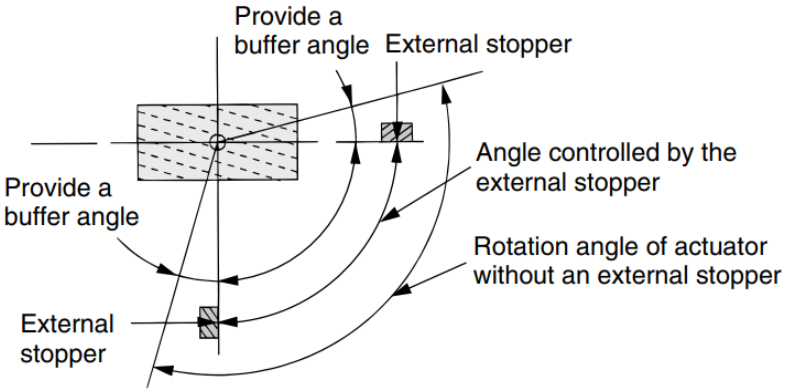

Precautions when Converting Rotational Motion to Linear Motion

When using a link mechanism, etc., to convert rotational motion to linear motion, and determining the operation end using the stopper on the linear motion end (see below), a small value for θ at the operation end may result in the torque of the rotary table causing excessive radial load to act on the output axle, and equipment breakage may occur.
Install a stopper on the rotation motion side, or increase the value of θ at the operation end, to make sure the load generated does not exceed the allowable value for the product.

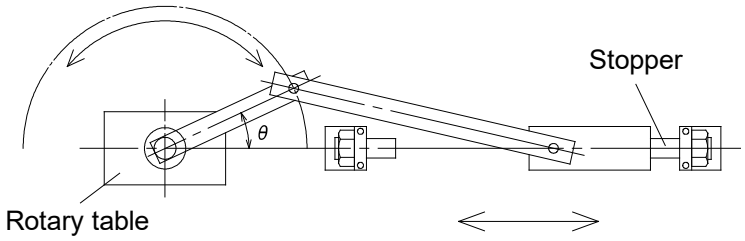

⚠ Caution

1. **Do not use organic solvent to wipe the area of the name plate that shows the model.**
   It will erase what is indicated on the name plate.
2. **Do not hit the rotating table by securing the body or hit the body by securing the rotating table.**
   These actions could cause the table to bend or damage the bearing.
3. **Do not place your foot directly on the table or on the equipment that is coupled to the table.**
   Placing one's weight directly onto the rotating table could cause the rotating table or the bearing to become damaged.
4. **If a product is equipped with an angle adjustment function, use it within the specified adjustment range.**
   If the product is used outside the specified adjustment range, it could lead to equipment malfunction or product damage. Refer to the product specifications for details on the adjustment range of the products.
5. **A product with an angle adjustment screw is temporarily secured at an arbitrary position near the rotation end. Before using the product, readjust it to the desired angle and tighten the screw firmly.**

Piping

⚠ Caution

1. **Refer to the Fittings and Tubing Precautions (Best Automation No.9) for handling one touch fittings.**
2. **Preparation before piping**
   Before piping is connected, it should be thoroughly blown out with air (flushing) or washed to remove chips, cutting oil and other debris from inside the pipe.
3. **Wrapping of pipe tape**
   When screwing piping or fittings into ports, ensure that chips from the pipe threads or sealing material do not enter the piping. Also, if tape is used, leave 1.5 to 2 thread ridges exposed at the end of the threads.

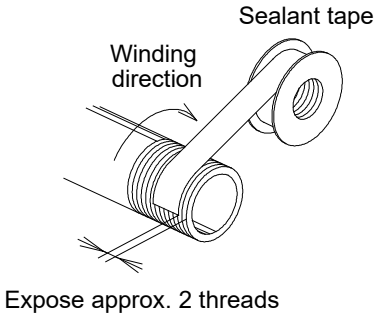

Speed and Cushion Adjustment

⚠ Warning

1. **To make a speed adjustment, gradually adjust starting from the low speed end.**
   If the speed adjustment is performed from the high speed end, it could damage the product.
   As a result, it could pose a hazard to humans and damage the machinery and equipment.

2. **For products with shock absorbers, when the shock absorber stops motion before reaching the stroke end using a stopper mechanism with the objective of shortening tact time be sure the shock absorber is stopped in a position where it has adequately absorbed the kinetic energy.**
   Failure to do so can result in damage to equipment.
3. **Note that a product with an air cushion or a shock absorber is not designed to achieve shock-less, smooth stop operation and constant deceleration of a load. The product absorbs the kinetic energy of a load to prevent its damage.**

Lubrication

⚠ Warning

1. **This product should be used without lubrication. Although it will operate even if it is lubricated, it could lead to sticking or slipping.**

Air Supply

⚠ Warning

1. **Type of fluids**
   Use compressed air.
2. **When there is a large amount of moisture**
   Compressed air containing a large amount of moisture can cause malfunction of pneumatic equipment. An air dryer or water separator should be installed upstream from filters.
3. **Drain flushing**
   If condensation in the drain bowl is not emptied on a regular basis, the bowl will overflow and allow the condensation to enter the compressed air lines. This may cause malfunction of pneumatic equipment.
   If the drain bowl is difficult to check and remove, installation of a drain bowl with an auto drain option is recommended.
4. **Use clean air.**
   Do not use compressed air that contains chemicals, synthetic oils including organic solvents, salt or corrosive gases, etc., as it can cause damage or malfunction.

⚠ Caution

1. **When low dew point air is used as the fluid, degradation of the lubrication properties inside the equipment may occur, resulting in reduced reliability (or reduced service life) of the equipment.**
   Please consider using low dew point products such as 25A-series.
2. **Install an air filter.**
   Install an air filter upstream near the valve. Select an air filter with a filtration size of 5μm or smaller.
3. **Take measures to ensure air quality, such as by installing an aftercooler, air dryer, or water separator.**
   Compressed air that contains a large amount of moisture can cause malfunction of pneumatic equipment such as rotary tables. Therefore, take appropriate measures to ensure air quality, such as by providing an aftercooler, air dryer, or water separator.
4. **Ensure that the fluid and ambient temperature are within the specified range.**
   If the fluid temperature is 5°C or less, the moisture in the circuit could freeze, causing damage to the seals and equipment malfunction. Therefore, take appropriate measures to prevent freezing.

Operating Environment

⚠ Warning

1. **Do not use in an atmosphere having corrosive gases, chemicals, sea water, water, steam, or where there is direct contact with any of these.**
   Refer to the construction for information on the rotary table material.
2. **Do not expose the product to direct sunlight for an extended period of time.**
3. **Do not use in a place subject to heavy vibration and/or shock.**
4. **Do not mount the product in locations where it is exposed to radiant heat.**
5. **Do not use in dusty locations or where water oil, etc., splash on the equipment.**

Maintenance

⚠ Warning

1. **Perform maintenance inspection according to the procedures indicated in the operation manual.**
   If handled improperly, malfunction and damage of machinery or equipment may occur.
2. **Maintenance work**
   If handled improperly, compressed air can be dangerous. Assembly, handling, repair and element replacement of pneumatic systems should be performed by a knowledgeable and experienced person.
3. **Drain flushing**
   Remove drainage from air filters regularly.
4. **Removal of equipment, and supply/exhaust of compressed air**
   When components are removed, first confirm that measures are in place to prevent workpieces from dropping, run-away equipment, etc. Then, cut off the supply pressure and electric power, and exhaust all compressed air from the system using the residual pressure release function.
   When machinery is restarted, proceed with caution after confirming that appropriate measures are in place to prevent cylinders from sudden movement.

⚠ Caution

1. **For lubrication, use the designated grease for each specific product.**
   The use of a non-designated lubricant could damage the seals.
   Please refer to Table 19 on page 44 for where to apply grease and the grease to use.

Auto Switches Precautions

Design / Selection

⚠ Warning

1. **Confirm the specifications.**
   If the product is used with excess load applied or beyond the specification range, this may cause the product to break or malfunction. We do not guarantee against any damage if the product is used outside of the specification range.
2. **Cautions for use in an interlock circuit.**
   When an auto switch is used for an interlock signal requiring high reliability, devise a double interlock system to avoid trouble by providing a mechanical protection function, or by also using another switch (sensor) together with the auto switch.
   Also, perform regular maintenance and confirm proper operation.
3. **Do not attempt to disassemble, modify (including exchanging the printed circuit boards), or repair the product.**
   An injury or failure can result.

⚠ Caution

1. **Pay attention to the length of time that a switch is ON at an intermediate stroke position.**
   When an auto switch is placed at an intermediate position of the stroke and a load is driven, at the time the piston passes the auto switch will operate, but if the speed is too great the operating time will be shortened and the load may not operate properly.
   The maximum piston speed is:

$$V(mm/s) = \frac{\text{Auto switch operating range (mm)}}{\text{Load applied time (ms)}} \times 1000$$

2. **Take precautions when multiple rotary tables are used close together.**
   When multiple auto switch rotary tables are used in close proximity, magnetic field interference may cause the auto switches to malfunction. Maintain a minimum cylinder separation of 40 mm. (When the allowable interval is specified for each cylinder series, use the indicated value.)
   The auto switches may malfunction due to interference from the magnetic fields.
   Use of a magnetic screen plate (MU-S025) or commercially available magnetic screen tape can reduce the interference of magnetic force.
3. **Ensure sufficient clearance for maintenance activities.**
   When designing an application, be certain to allow sufficient clearance for maintenance.
4. **Do not mount rotary table with the auto switch on a footing.**
   If work personnel gets on or puts the work personnel's foot on the footing accidentally, an excessive load is applied to the rotary table, causing the rotary table to break.
5. **Design the circuit so that any back-flow current does not flow in if a short-circuit trouble occurs or forced operation is performed to check the operation.**
   If a back-flow current occurs, this may cause the switch to malfunction or break.
6. **When multiple auto switches are required.**
   "n" indicates the number of auto switches which can be physically mounted on the rotary tables. Detection intervals depends on the auto switch mounting structure and set position, therefore some required interval and set positions may not be available.
7. **Limitations on detectable position**
   There are positions or surfaces (bottom surface of the foot bracket, etc.) where the auto switch cannot be mounted due to the physical interference depending on the rotary table mounting status or mounting bracket. Select an appropriate auto switch setting position where the auto switch does not interfere with the rotary table mounting bracket (trunnion or reinforcing ring) after checking it sufficiently.

8. Provide enough space for the lead wire.

Applying stress to the lead wire and auto switch body connection part increases the risk of disconnection. Provide a space of at least the min. bending radius from the lead wire and auto switch body connection part.

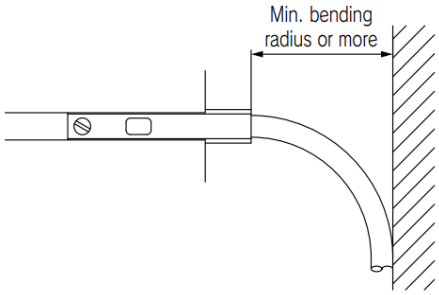

9. Keep wiring as short as possible.

<Reed>

As the length of the wiring to a load gets longer, the rush current at switching ON becomes greater, and this may shorten the product's life. (The switch will stay ON all the time.)

1) Use a contact protection box when the wire length is 5m or longer.
2) Even if an auto switch has a built-in contact protection circuit, when the wiring is more than 30 m long, it is not able to adequately absorb the rush current and its life may be reduced.

<Solid state>

Be sure to use a wire length 100m or less.

When the wire length is long, we recommend the ferrite core should be attached to the both ends of the cable to prevent excess noise. A contact protection box is not necessary for solid state switches due to the nature of this product construction.

10. Do not use a load that generates surge voltage.

<Reed>

If a surge voltage is generated, the discharge occurs at the contact, possibly resulting in the shortening of product life.

If driving a load such as a relay that generates a surge voltage, use an auto switch with built-in contact protection circuit or use a contact protection box.

<Solid state>

If driving a load such as a relay that generates a surge voltage, use a built-in surge absorbing element type device.

11. Pay attention to the internal voltage drop of the auto switch.

<Reed>

1) Auto switch with an indicator light

・If auto switches are connected in series as shown below, take note that there will be a large voltage drop because of internal resistance in the light emitting diodes. (Refer to the internal voltage drop in the auto switch specifications.)
[The voltage drop will be "n" times larger when "n" auto switches are connected.]
Even though an auto switch operates normally, the load may not operate.

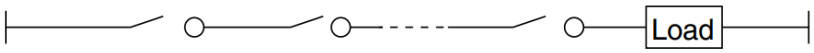

・In the same way, when operating under a specified voltage, although an auto switch may operate normally, the load may not operate. Therefore, the formula below should be satisfied after confirming the minimum operating voltage of the load.

Supply voltage − Internal voltage drop of auto switch > Minimum operating voltage of load

2) If the internal resistance of a light emitting diode causes a problem, select an auto switch without an indicator light.

<Solid state / 2-wire type>

Generally, the internal voltage drop of the solid state auto switch is larger than that or the reed auto switch. When the auto switches (“n” pcs.) are connected in series, the voltage drop is multiplied by “n”. In this case, the auto switches operate correctly, but the loads may not operate. Additionally, note that the 12 VDC relay does not apply to the auto switch.

12. Pay attention to leakage current.

<2-wire type>

Current (leakage current) flows to the load to operate the internal circuit even when in the OFF state.

Operating current of load (OFF condition) > Leakage current

If the criteria given in the above formula are not met, it will not reset correctly (stays ON).Use a 3-wire switch if this specification will not be satisfied.

Moreover, leakage current flow to the load will be “n” times larger when “n” auto switches are connected in parallel.

13. Output operation of the solid state auto switch is not stable for 50 [ms] after powered ON.

In the output operation immediately after powered ON or AND connection operation, the input device (PCL or relay, etc.) may judge the ON position as OFF output or the OFF position as ON output. So, please make the setting on the equipment so that the input judgement signal is set disabled for 50 [ms] immediately after powered ON or AND connection. When using SMC’s AHC system (Auto Hand Changing System) Series MA, please also make this setting.

Mounting / Adjustment

⚠ Warning

1. **Do not drop or bump.**
   Do not drop, bump or apply excessive impacts (300m/s^2 or more for reed auto switches and 1000m/s^2 or more for solid state auto switches) while handling. Although the body of the auto switch may not be damaged, the inside of the auto switch could be damaged and cause malfunction.
2. **Observe the proper tightening torque for mounting an auto switch.**
   When an auto switch is tightened beyond the range of tightening torque, auto switch mounting screws, auto switch mounting brackets or auto switch may be damaged.
   On the other hand, tightening below the range of tightening torque may allow the auto switch to slip out of position.
3. **Do not carry a rotary table by the auto switch lead wires.**
   This may cause disconnection of the lead wire or the internal element to break.
4. **Do not use screws other than the set screws installed on the auto switch body to secure the auto switch.**
   If using other screws, auto switch may be damaged.

5. **Mount an auto switch at the center of the operating range.**
   In the case of 2-color display auto switch, mount it at the center of the green LED illuminating range. Adjust the mounting position of the auto switch so that the piston stops at the center of the operating range. (The mounting position shown in the catalog indicates the optimum position at stroke end.)
   If mounted at the end of the operating range (around the borderline of ON and OFF), operation will be unstable depending of the operating environment. Also there are some rotary tables with individual setting methods for auto switches. If so, mount it in accordance with the indicated method.

   Even if 2-color indication solid state auto switches are fixed at a proper operating range (the green light lights up), the operation may become unstable depending on the installation environment or magnetic field disturbance.

   (Magnetic body, external magnetic field, proximal installation of rotary actuators with built-in magnet and actuators, temperature change, other factors for magnetic force fluctuation during operation, etc.)

6. **Check the actual actuation status and adjust the auto switch mounting position.**
   According to the installation environment, the rotary table may not operate even at its proper mounting position. Even when setting at a midpoint of the stroke, check the actuation status and make the adjustment in the same manner.
7. **Be very careful when handling the auto switch mounting band, as it has a thin structure.**

Wiring

⚠ Warning

1. **Confirm proper insulation of wiring.**
   If there is any improper insulation (mixed contact with other circuit, grounding fault, or improper insulation between terminals, etc.) in the wiring, an over-current flows in, causing the auto switch to break.
2. **Wire separately from power lines of high voltage lines, avoiding parallel wiring of wiring in the same conduit with these lines.**
   If an inrush current is generated, the noise may cause the auto switch to malfunction.
3. **Be certain to connect the load before power is applied.**
   <2-wire type>
   If the power is turned ON when an auto switch is not connected to a load, the auto switch will be instantly damaged because of excess current (short circuit).
   It is the same as when the 2-wire brown lead wire (+, output) is directly connected to the (+) power supply terminal.
4. **Carry out the wiring work after shutting down the power.**
   If the wiring work is performed with the power turned ON, this may cause electric shock, malfunction, or damage to the auto switch.

5. Avoid repeatedly bending or stretching lead wires.

Broken lead wires will result from repeatedly applying bending stress or stretching force to the read wires.

Stress and tensile force applied to the connection between the lead wire and auto switch increases the possibility of disconnection.

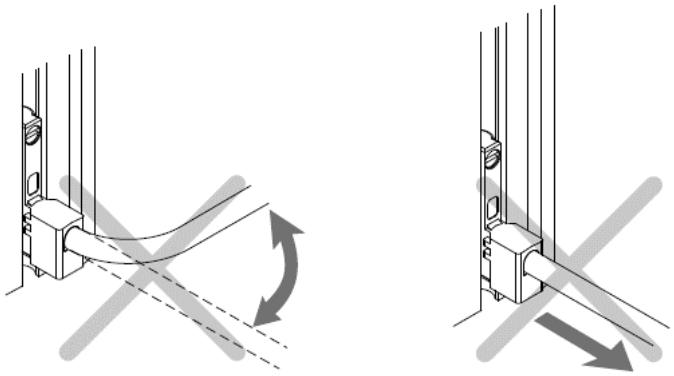

6. Do not allow short-circuit of loads.

<Reed>

If the power is turned ON with a load in a short circuit condition, the switch will be instantly damaged because of excess current flow into the switch.

<Solid state>

PNP output type auto switches do not have built-in short circuit protection circuits.

Carefully handle as the auto switch may be damage.

7. Avoid incorrect wiring.

<Reed>

A 24 VDC auto switch with indicator light has polarity. The brown lead wire or terminal No.1 is (+), and the blue lead wire or terminal No.2 is (－).

1) If connections are reversed, an auto switch will operate, however, the light emitting diode will not light up.
   Also, take note that a current greater than that specified will damage a light emitting diode and it will no longer operate.
   Applicable model: D-93, A93V

<Solid state>

1) If connections are reversed on a 2-wire type auto switch, the auto switch will not be damaged if protected by a protection circuit, but the auto switch will always stay in an ON state. However, it is still necessary to avoid reversed connections, since the auto switch could be damaged by a load short circuit in this condition.
2) If connections are reversed (power supply line + and power supply line－) on a 3-wire type auto switch, the auto switch will be protected by a protection circuit. However, if the power supply line (+) is connected to the blue wire and the power supply line (－) is connected to the black wire, the auto switch will be damaged.

8. When the lead wire sheath is stripped, confirm the stripping direction. The insulator may be split or damaged depending on the direction. (D-M9□ only)

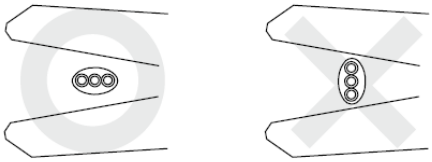

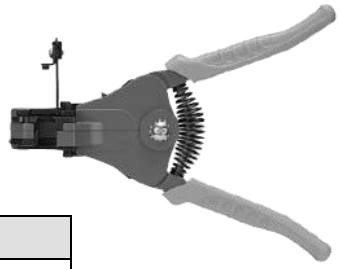

Recommended Tool

Description	Model
Wire stripper	D-M9N-SWY

∗ Stripper for a round cable (Ø2.0) can be used for a 2-wire type cable.

Operation Environment

⚠ Warning

1. **Never use in an atmosphere with explosive gases.**
   The structure if auto switches is not intended to prevent explosion. This may lead to explosion hazard.

⚠ Caution

1. **Do not use in an area where a magnetic field is generated.**
   Auto switches will malfunction or magnets inside rotary tables will become demagnetized.
2. **Do not use in an environment where the auto switch will be continually exposed to water.**
   Although auto switches satisfy IEC standard IP67 construction expect some models (D-A3☐, A44☐, G39☐, K39☐, RNK, RPK) do not use auto switches in applications where continually exposed to water splash or splay. This may cause improper insulation or malfunction.
3. **Do not use in an environment with oil or chemicals.**
   If auto switches are used in an environment containing coolant, cleaning solvent, various oils, or chemicals even for a short period of time, this may adversely affect the auto switches, resulting in improper insulation, malfunction due to swelling of the potting resin, or hardening of the lead wires.
4. **Do not use in an environment with temperature cycles.**
   If temperature cycles other than normal temperature changes are applied, this may adversely affect the insides of the auto switches.
5. **Do not use in an environment where there is excessive impact shock.**
   <Reed>
   When excessive impact (300m/s^2 or more) is applied to a reed auto switch during operation, the contacts may malfunction and generate or cut off a signal momentarily (1ms or less).
6. **Do not use in an area where surges are generated.**
   <Solid state>
   If there is an equipment unit (electromagnetic lifter, high-frequency induction furnace, motor, or radio, etc.) that generates large surges or electromagnetic waves around cylinders with solid state auto switches or actuators, this may cause the circuit element inside the auto switch to break.
7. **Avoid accumulation of iron waste or close contact with magnetic substances.**
   If many iron particles, such as cutting chips or spatters accumulate around a rotary table with the auto switches if a magnetic substance (attracted by a magnet) is put close to a rotary table with the auto switch , the magnetic force inside the rotary table loses, causing the auto switch to malfunction.
8. **Do not use in direct sunlight.**
9. **Do not mount the product in locations where it is exposed to radiant heat.**
10. **Take appropriate measures against the lightning surge on the equipment side as the auto switches do not have any lightning surge resistance specified in the CE marking.**

Maintenance

⚠ Warning

1. **Removal of equipment, and supply/exhaust of compressed air.**
   Before any machinery or equipment is removed, first ensure that the appropriate measures are in place to prevent the fall or erratic movement of driven objects and equipment, then cut off the electric power and reduce the pressure in the system to zero. Only then should you proceed with the removal of any machinery and equipment.
   When machinery is restarted, proceed with caution after confirming that appropriate measures are in place to prevent rotary tables from moving suddenly.
2. **Do not touch a terminal during energizing.**
   Touching a terminal during energizing may cause electric shock, malfunction, or auto switch breakage.

⚠ Caution

1. **Perform the following maintenance periodically in order to prevent possible danger due to unexpected auto switch malfunction.**
   1) Secure and tighten auto switch mounting screws.
      If screws become loose or the mounting, position is dislocated, retighten them after readjusting the mounting position.
   2) Confirm that there is no damage to lead wires.
      To prevent faulty insulation, replace auto switches or repair lead wires, etc., if damage is discovered.
   3) Confirm the detection setting position.
      ・Red light of 1-color display auto switch
      Confirm that the set position stops at the center of the operating range (red display area).
      ・Conform the green light and position of the 2-color display auto switch.
      Conform that the set position stops at the center of the appropriate operating range (green display area). If stopped with the red LED lit, the operation may become unstable due to effects of the equipment environment or external disturbance. So, set the mounting position at the center of the appropriate operating range again.
2. **Do not use solvents such as benzene, thinner etc. to clean the product.**
   They could damage the surface of the body and erase the markings on the body. For heavy stains, use a cloth lightly dampened with diluted neutral detergent, then wipe up any residue with a dry cloth.

Handling Precautions

⚠ Caution

1. **Do not remove the protective cover attached to the auto switch (D-A9 ・(V)/Z7 ・/Z80 type) product body until immediately before the product is to be mounted to the rotary table.**
   The protective cover attached to the body of the D-A9 ・(V)/Z7 ・/Z80 type auto switch is intended to reduce impact during handling and prevent the auto switch holding screw from falling out.
   In particular, it reduces impact to the auto switch body if it is accidentally bumped when mounting a connector or tubing to the auto switch, so do not remove it until immediately before mounting it to the rotary table.

Outline

This operation manual explains “Rack and Pinion Type Rotary table”.
When using the product, load (moment of inertia), rotation time and other factors have to be considered.
So, confirm the specification of the product prior to use.

How to order

Standard type MSQ G 10 A T – M9BW □ □ – □

Nil	Basic type
G	High precision type

Size

10
20
30
50

A	Cushion pad
D	Bumper
R	Internal shock absorber

Nil	Without table
T	With table

Auto switch type

Nil	Without auto switch (Built-in magnet)

∗Refer to the table below for auto switch types.

Number of auto switch

Nil	2 pcs.
s	1 pc.
n	n pcs.

Port type

End port type		Size
Nil	M5	10, 20
Nil	Rc1/8	30, 50
-XF	G1/8	
-XN	NPT1/8	
-XT	NPTF1/8	

∗ Side ports are all M5.

Made to order

Nil	None
A	Interchangeable mounting type

∗Cannot be selected "With table" option.

Applicable Auto Switches/Refer to the **Web Catalog** for further information on auto switches.

Type	Special function	Electrical entry	Indicator light	Wiring (Output)	Load voltage DC		Load voltage AC	Auto switch model Perpendicular	Auto switch model In-line	Lead wire length [m] 0.5 (Nil)	1 (M)	3 (L)	5 (Z)	Pre-wired connector	Applicable load	
Solid state auto switch	—	Grommet	Yes	3-wire (NPN)	24 V	5 V, 12 V	—	**M9NV**	**M9N**	●	●	●	○	○	IC circuit	Relay, PLC
				3-wire (PNP)				**M9PV**	**M9P**	●	●	●	○	○		
				2-wire		12 V		**M9BV**	**M9B**	●	●	●	○	○	—	
	Diagnostic indication (2-color indicator)			3-wire (NPN)		5 V, 12 V		**M9NWV**	**M9NW**	●	●	●	○	○	IC circuit	
				3-wire (PNP)				**M9PWV**	**M9PW**	●	●	●	○	○		
				2-wire		12 V		**M9BWV**	**M9BW**	●	●	●	○	○	—	
	Water resistant (2-color indicator)			3-wire (NPN)		5 V, 12 V		**M9NAV**∗1	**M9NA**∗1	○	○	●	○	○	IC circuit	
				3-wire (PNP)				**M9PAV**∗1	**M9PA**∗1	○	○	●	○	○		
				2-wire		12 V		**M9BAV**∗1	**M9BA**∗1	○	○	●	○	○	—	
Reed auto switch	—	Grommet	Yes	3-wire (NPN equiv.)	—	5 V	—	**A96V**	**A96**	●	●	●	●	○	IC circuit	—
			No	2-wire	24 V	12 V	100 V	**A93V**	**A93**	●	●	●	●	○∗2	—	Relay, PLC
							100 V or less	**A90V**	**A90**	●	●	●	●	○∗2	IC circuit	

∗1 Although it is possible to mount water-resistant type auto switches, note that the rotary actuator itself is not of water-resistant construction.
∗2 The load voltage used is 24 VDC.

∗ Lead wire length symbols: 0.5 m·····Nil (Example) M9NW
1 m····· M (Example) M9NWM
3 m····· L (Example) M9NWL
5 m····· Z (Example) M9NWZ

∗ Auto switches marked with a “○” are produced upon receipt of order.

∗ Refer to the **Web Catalog** for the details of auto switch with prewired connector.

∗ Auto switches are shipped together with the product but do not come assembled.

With external shock absorber

MSQ G 10 L 2 – M9BW □ □ – □

Nil	Basic type
G	High precision type

Size

10
20
30
50

Shock absorber type

L	Shock absorber for low energy
H	Shock absorber for high energy

Port location/Rotation

2	Standard type	180°
3		90°
4	Symmetric type	180°
5		90°

Auto switch type

Nil	Without auto switch (Built-in magnet)

*Refer to the table below for auto switch types.

Made to order

Nil	None
A	Interchangeable mounting type

Port type

End port type		Size
Nil	M5	10, 20
Nil	Rc1/8	30, 50
-XF	G1/8	
-XN	NPT1/8	
-XT	NPTF1/8	

* Side ports are all M5.

Number of auto switch

Nil	2 pcs.
s	1 pc.
n	n pcs.

Port location/Rotation

Connecting port position	Rotation: 180°	Rotation: 90°
Standard type	**2: Standard type, 180°** 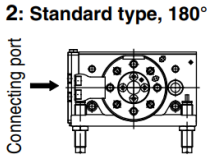	**3: Standard type, 90°** 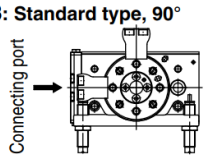
Symmetric type	**4: Symmetric type, 180°** 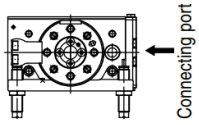	**5; Symmetric type, 90°** 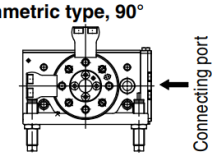

Applicable Auto Switches/Refer to the **Web Catalog** for further information on auto switches.

Type	Special function	Electrical entry	Indicator light	Wiring (Output)	Load voltage DC		Load voltage AC	Auto switch model Perpendicular	Auto switch model In-line	Lead wire length [m] 0.5 (Nil)	1 (M)	3 (L)	5 (Z)	Pre-wired connector	Applicable load	
Solid state auto switch	—	Grommet	Yes	3-wire (NPN)	24 V	5 V, 12 V	—	M9NV	M9N	●	●	●	○	○	IC circuit	Relay, PLC
				3-wire (PNP)				M9PV	M9P	●	●	●	○	○		
				2-wire		12 V		M9BV	M9B	●	●	●	○	○	—	
	Diagnostic indication (2-color indicator)			3-wire (NPN)		5 V, 12 V		M9NWV	M9NW	●	●	●	○	○	IC circuit	
				3-wire (PNP)				M9PWV	M9PW	●	●	●	○	○		
				2-wire		12 V		M9BWV	M9BW	●	●	●	○	○	—	
	Water resistant (2-color indicator)			3-wire (NPN)		5 V, 12 V		M9NAV*1	M9NA*1	○	○	●	○	○	IC circuit	
				3-wire (PNP)				M9PAV*1	M9PA*1	○	○	●	○	○		
				2-wire		12 V		M9BAV*1	M9BA*1	○	○	●	○	○	—	
Reed auto switch	—	Grommet	Yes	3-wire (NPN equiv.)	—	5 V	—	A96V	A96	●	●	●	●	○	IC circuit	—
			No	2-wire	24 V	12 V	100 V	A93V	A93	●	●	●	●	○*2	—	Relay, PLC
							100 V or less	A90V	A90	●	●	●	●	○*2	IC circuit	

*1 Although it is possible to mount water-resistant type auto switches, note that the rotary actuator itself is not of water-resistant construction.
*2 The load voltage used is 24 VDC.

* Lead wire length symbols: 0.5 m····· Nil (Example) M9NW
1 m····· M (Example) M9NWM
3 m····· L (Example) M9NWL
5 m····· Z (Example) M9NWZ

* Auto switches marked with a "○" are produced upon receipt of order.

* Refer to the **Web Catalog** for the details of auto switch with prewired connector.

* Auto switches are shipped together with the product but do not come assembled.

Specifications

Table 1. Specifications <Standard type>

Size		10	20	30	50
Fluid		Air (non-lube)			
Maximum operating pressure	Cushion pad	1MPa			
	Bumper				
	Internal shock absorber	0.6MPa*1			
Minimum operating pressure		0.1MPa*2 *5			
Ambient and fluid temperature		0 to 60°C (no freezing)			
Cushion	Cushion pad *3	Rubber cushion			
	Bumper				
	Internal shock absorber	Shock absorber			
Allowable kinetic energy	Cushion pad	0.007J	0.025J	0.048J	0.081J
	Bumper	0.014J	0.042J	0.072J	0.162J
	Internal shock absorber	0.039J	0.116J	0.116J	0.294J
Angle adjustment range		0 to 190° *4			
Maximum rotation		190°			
Rotation time adjustment range	Cushion pad	0.2 to 2.0 s/90°			
	Bumper				
	Internal shock absorber	0.2 to 0.7 s/90° *6			
Cylinder bore size		Ø13	Ø16	Ø20	Ø22
Port size	End ports	M5x0.8		Rc1/8 , G1/8 NPT1/8 , NPTF1/8	
	Side ports	M5x0.8			

∗1 The maximum operating pressure of the actuator is restricted by the maximum allowable thrust of the shock absorber.
∗2 Please refer to page 50 for the minimum operating pressure of the bumper type.
∗3 Reduces the noise which is generated when the piston and adjustment bolt collide into each other.
∗4 Be careful if the rotation angle of a type with internal shock absorber is set below the value in the table 2, the piston stroke will be smaller than the shock absorber's effective stroke, resulting in decreased energy absorption ability.
∗5 If the high precision type is operated at a speed slower than 1.0 s/90°, set a supply pressure of 0.3 MPa or more.
∗6 When the rotation time of the type with an internal absorber is set longer than the time shown in the table 1, energy absorption of the shock absorber greatly decreases.

Table 2. Minimum rotation angle that will not allow decrease of energy absorption ability

Size	10	20	30	50
Minimum rotation angle that will not allow decrease of energy absorption ability	40°	35°	35°	47°

Table 3. Specifications <With external shock absorber type>

Size		10	20	30	50
Fluid		Air (non-lube)			
Maximum operating pressure		1MPa			
Minimum operating pressure		0.2MPa *3			
Ambient and fluid temperature		0 to 60°C (no freezing)			
Cushion		Shock absorber			
Allowable kinetic energy	For low energy	0.161J	0.574J	0.805J	1.310J
	For high energy	0.231J	1.060J	1.210J	1.820J
Angle adjustment range		Each rotation end ±3° *1			
Maximum rotation		96°, 186°			
Rotation time adjustment range		0.2 to 2.0 s/90° *2			
Cylinder bore size		Ø13	Ø16	Ø20	Ø22
Port size	End ports	M5x0.8		Rc1/8 , G1/8 NPT1/8 , NPTF1/8	
	Side ports	M5x0.8			

∗1 For external absorber type there are two rotating angles, 90° specification and 180° specification.
∗2 The values in the table indicate the time from the start of rotation until the shock absorber acts, reducing the speed. After deceleration, the time required to reach the rotating end is about 0.2 to 2s. However, it varies according to the operating conditions (moment of inertia for load, rotating speed, operating pressure). The shock absorber acts in the range between the rotating end and the angles shown table 4.
∗3 If the high precision type is operated at a speed slower than 1.0 s/90°, set a supply pressure of 0.3 MPa or more.

Table 4. Rotating angle at which the shock absorber acts

Size	10	20	30	50
For low energy	7.3°	7.1°	6.4°	9.6°
For high energy	8.8°	8.3°	7.5°	10.5°

Weight

Table 5. <Standard type> [g]

Size		10	20	30	50
Basic type	Cushion pad	375	680	930	1500
	Bumper				
	Internal shock absorber	440	795	1130	1810
High precision type	Cushion pad	395	695	950	1555
	Bumper				
	Internal shock absorber	460	815	1160	1865

∗ Values excluding the weight of auto switch
∗ For With table type and Interchangeable mounting type, add the mass in Table 7 to the weight in Table 5.

Table 6. < With External shock absorber > [g]

Size		10	20	30	50
Basic type	90° specification	480	910	1205	2000
	180° specification	455	860	1145	1880
High precision type	90° specification	495	905	1200	2000
	180° specification	470	855	1145	1880

∗ Values excluding the weight of auto switch
∗ For Interchangeable mounting type, add the mass in Table 7 to the weight in Table 6.

Table 7. With table / Interchangeable mounting type Parts Addition Weight [g]

Size			10	20	30	50
Standard type	Basic type High precision type	With table	30	65	80	135
	Basic type	Interchangeable mounting type	70	160	120	220
	High precision type		90	225	200	320
With External shock absorber	Basic type	Interchangeable mounting type	40	100	40	90
	High precision type		60	160	120	180

Effective torque

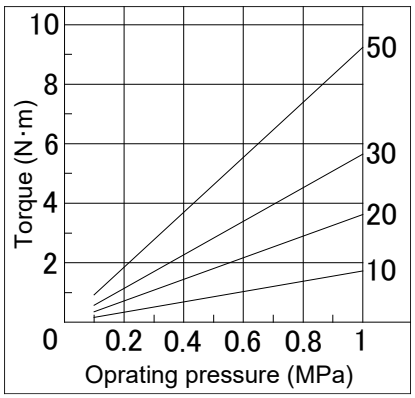

Internal construction and parts

MSQ∗10 to 50∗

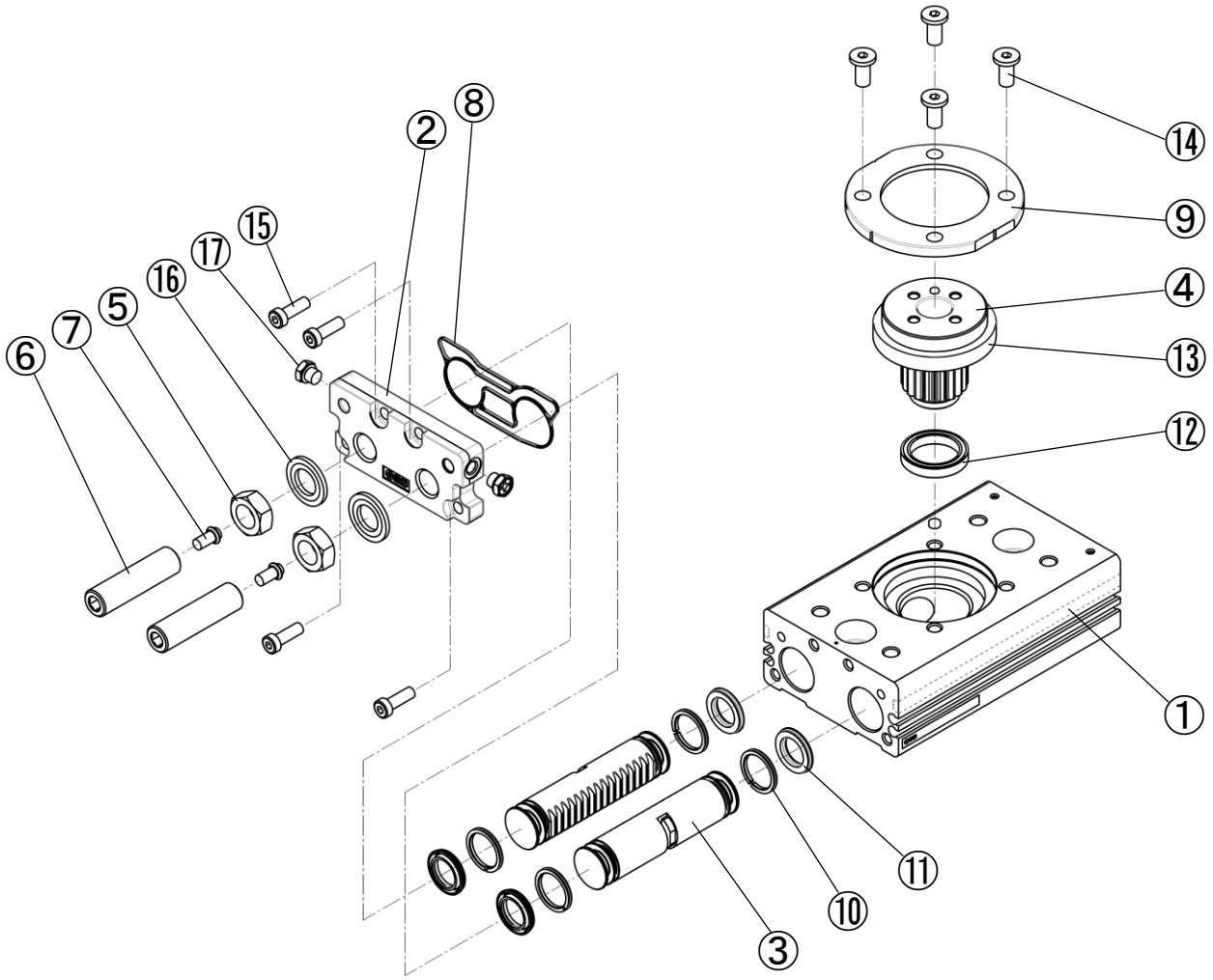

No.	Description	Qty.	Note
17	M5 Plug assembly	2	
16	Seal washer	2	
15	Hexagon socket thin head cap screw	3	4pcs. for size 20, 30, 50
14	Hexagon socket super thin head cap screw	4	
13	Cross roller bearing	1	High precision type
	Bearing		Basic type
12	Bearing	1	
11	Piston seal	4	
10	Wear ring	4	
9	Bearing retainer	1	
8	Gasket	1	
7	Cushion pad or bumper	2	Not included in the internal absorber type
6	Adjustment bolt or shock absorber	2	
5	Compact hexagon nut	2	
4	Table pinion	1	
3	Piston	2	
2	End cover	1	
1	Body	1	

With external shock absorber

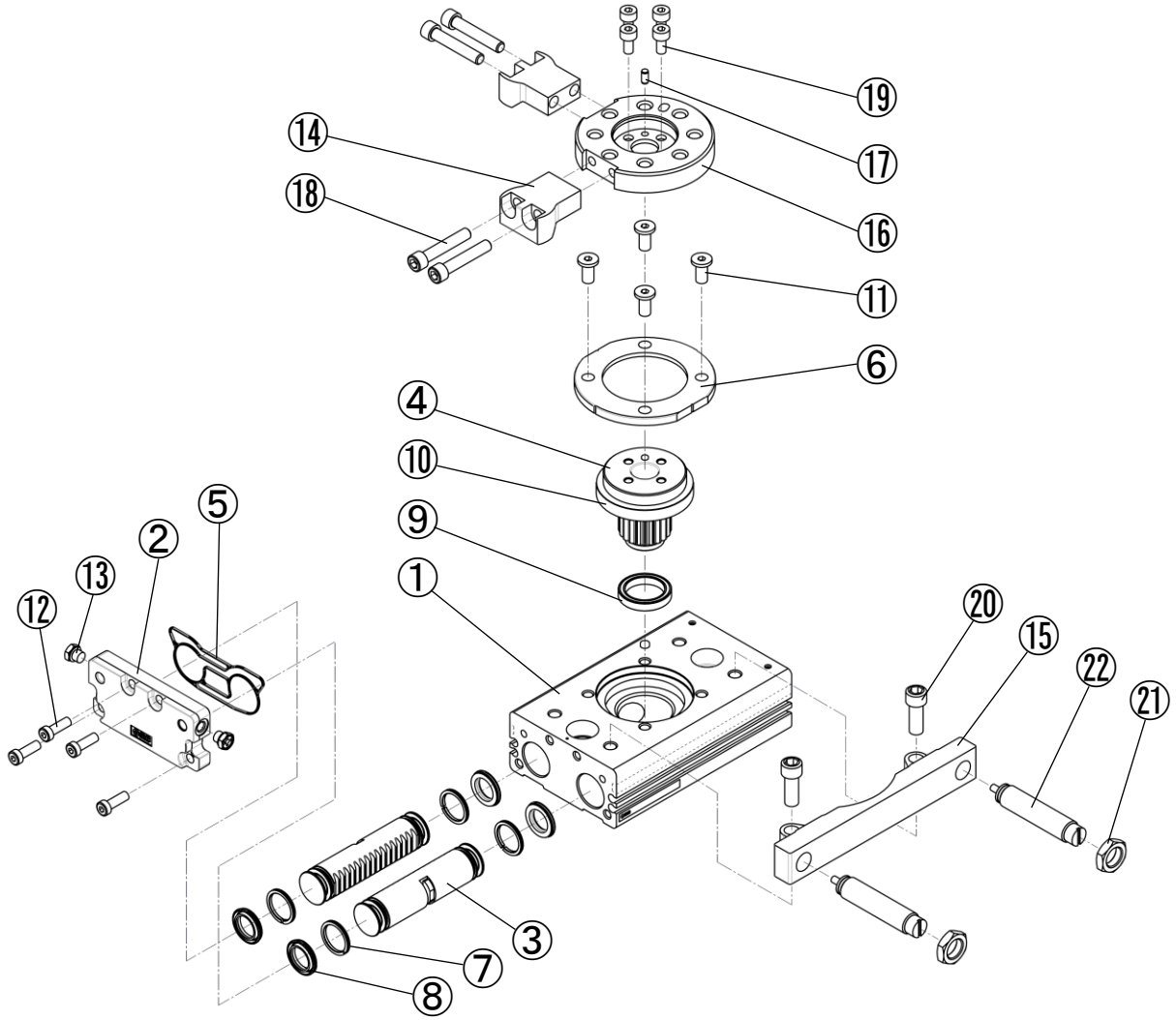

No.	Description	Qty.	Note
22	Shock absorber	2	
21	Hexagon nut	2	
20	Hexagon socket head cap screw	2	
19	Hexagon socket head cap screw	4	
18	Hexagon socket head cap screw		4pcs. for 90°, 2pcs. for 180°
17	Parallel pin	1	
16	Table for external absorber	1	
15	Shock absorber holder	1	
14	Arm		2pcs. for 90°, 1pc. for 180°
13	M5 Plug assembly	2	
12	Hexagon socket thin head cap screw	3	4pcs. for size 20, 30, 50
11	Hexagon socket super thin head cap screw	4	
10	Cross roller bearing	1	High precision type
	Bearing		Basic type
9	Bearing	1	
8	Piston seal	4	
7	Wear ring	4	
6	Bearing retainer	1	
5	Gasket	1	
4	Table pinion	1	
3	Piston	2	
2	End cover	1	
1	Body	1	

With table / Interchangeable mounting type

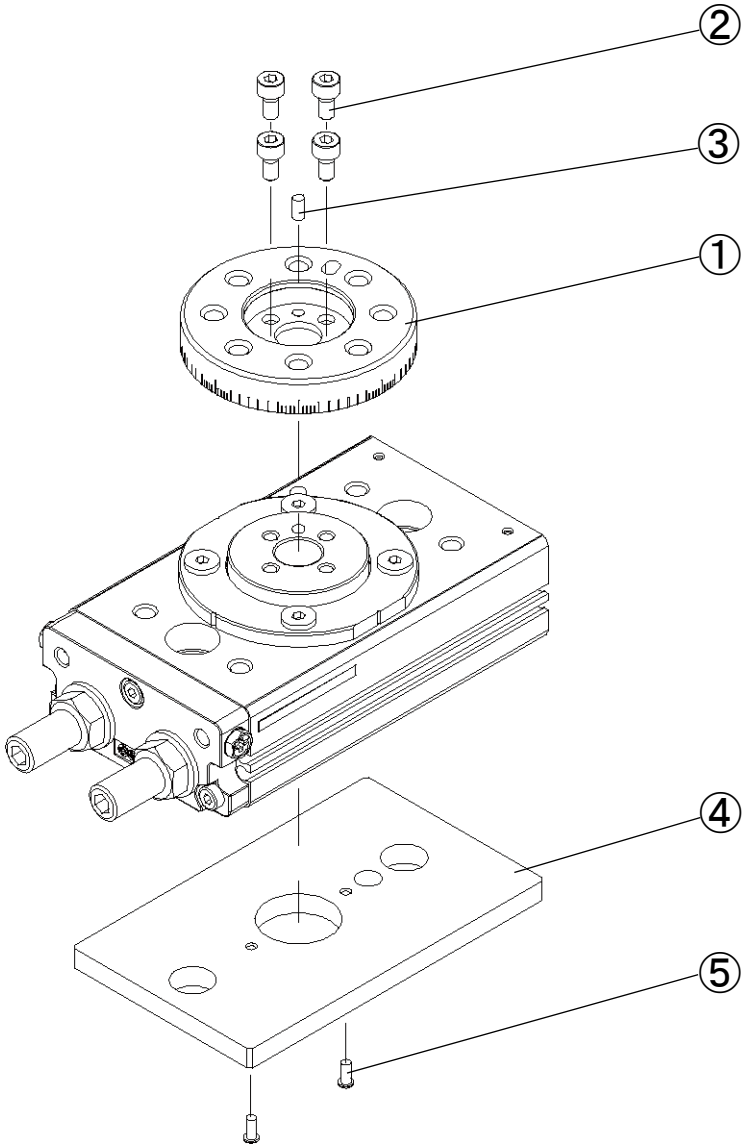

No.	Description	Qty.	Applicable Specifications
5	Cross recessed head machine screw for precision instruments	2	Interchangeable mounting type
4	Plate	1	Interchangeable mounting type
3	Parallel pin	1	With table, Interchangeable mounting type
2	Hexagon socket head cap screw	4	With table, Interchangeable mounting type
1	Table	1	With table, Interchangeable mounting type

∗ Refer to page 23, 24 for the components other than those above.

∗ With external absorber type is available only parts 4 and 5 can be installed.

Basic circuit

Circuit structure

The basic circuit used for operating the rotary table with an air filter, regulator, solenoid valve, and speed controller is shown in Figure 1.

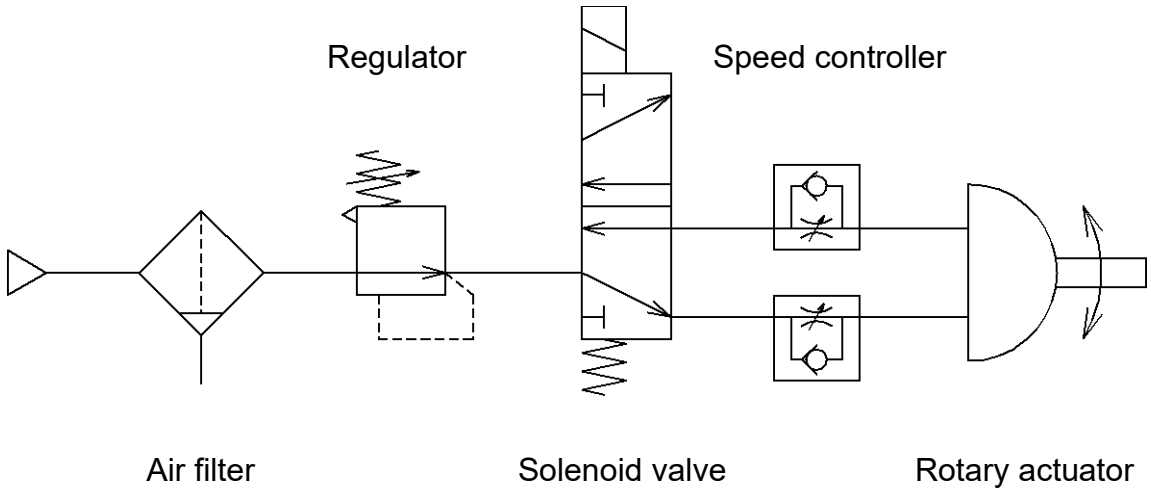

Fig.1 Basic circuit

Recommended models

Recommended models for the standard circuit in Figure 1 are shown in Table 7 below.

Table 7. Recommended models

Size	Solenoid valve (CV value)	Speed controller	Tubing
10	0.15 to 0.2	AS1000 series	Ø4 or more
20			
30		AS2000 series	
50			

Mounting

Load restrictions

Set the load and moment to be applied to the table within the allowable values shown in the table below. (Values exceeding the allowable range will cause excessive play, reduce accuracy, and shorten service life.)

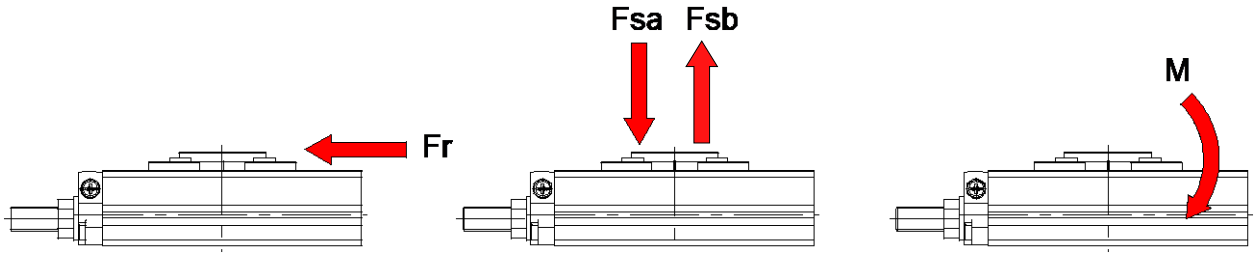

Fig. 2

Table 8. Allowable Load

<Basic type> [N]

Size	Load direction			
	Fsa	Fsb	Fr	M[N·m]
10	78	74	78	2.4
20	137	137	147	4.0
30	363	197	196	5.3
50	451	296	314	9.7

<High precision type > [N]

Size	Load direction			
	Fsa	Fsb	Fr	M[N·m]
10	128	74	103	3.5
20	236	137	199	5.8
30	478	197	280	7.7
50	620	296	454	13.2

Bolts for mounting product

When mounting the body, use screws of the appropriate length.

1. Top mounting (Through hole)

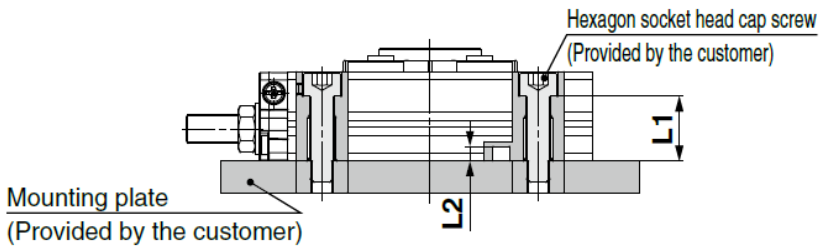

Size	L1		L2	
	Screw	Length [mm]	Pin [mm]	Effective depth [mm]
10	M6 x 1	23.5	Ø 3	3.5
20	M8 x 1.25	22.5	Ø 4	4.5
30	M8 x 1.25	29.5	Ø 4	4.5
50	M10 x 1.5	32.5	Ø 5	5.5

2. Bottom mounting (Body tapped)

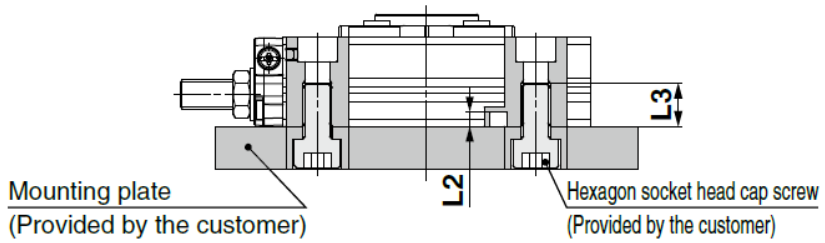

Size	L2		L3	
	Pin [mm]	Effective depth [mm]	Screw	Max. screw-in depth [mm]
10	Ø 3	3.5	M8 x 1.25	12
20	Ø 4	4.5	M10 x 1.5	15
30	Ø 4	4.5	M10 x 1.5	15
50	Ø 5	5.5	M12 x 1.75	18

3. Top mounting (Body tapped)

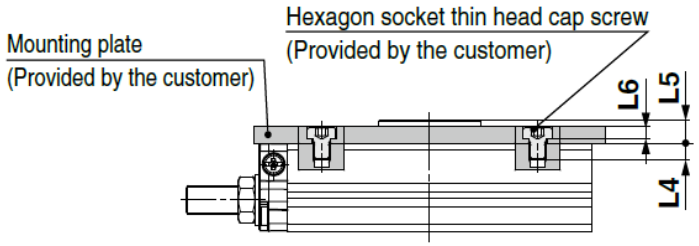

Size	L4		L5	L6
	Screw	Max. screw-in depth [mm]	Height [mm]	Counterbore depth [mm]
10	M5 x 0.8	6	6	3.9
20	M6 x 1	6	8	4.5
30	M6 x 1	6	8	4.5
50	M8 x 1.25	8	8.5	5.6

■ Interchangeable mounting type

4. Top mounting (Through hole)

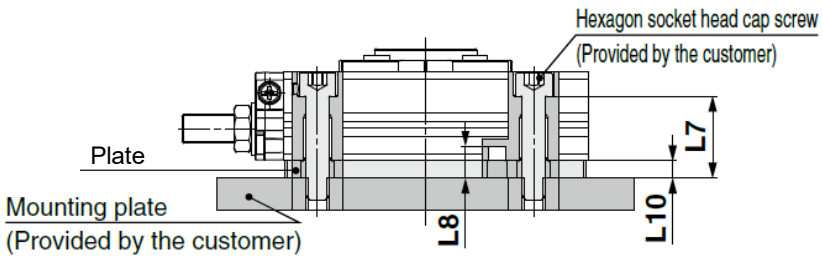

Size	L7		L8		L10
	Screw	Length [mm]	Pin [mm]	Depth*1 [mm]	Plate thickness [mm]
10	M6 x 1	28	Ø 3	8	4.5
20	M8 x 1.25	28.5	Ø 4	10.5	6
30	M8 x 1.25	31.5	Ø 4	6.5	2
50	M10 x 1.5	35.5	Ø 5	8.5	3

*1 The effective depth of the pin is the depth obtained by subtracting the plate thickness (L10) from the L8 depth.

* Refer to page 48 for the tightening torque of the interchangeable parts.

5. Bottom mounting (Body tapped)

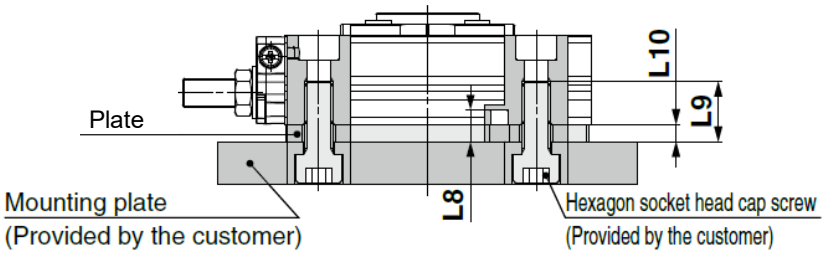

Size	L8		L9		L10
	Pin [mm]	Depth*1 [mm]	Screw	Max. screw-in depth [mm]	Plate thickness [mm]
10	Ø 3	8	M8 x 1.25	16.5	4.5
20	Ø 4	10.5	M10 x 1.5	21	6
30	Ø 4	6.5	M10 x 1.5	17	2
50	Ø 5	8.5	M12 x 1.75	21	3

*1 The effective depth of the pin is the depth obtained by subtracting the plate thickness (L10) from the L8 depth.

* Refer to page 48 for the tightening torque of the interchangeable parts.

Rotation direction and rotation angle <Standard type>

- When the cylinder is pressurized from port B, the table rotates clockwise. (Please note that this product differs from the conventional MSQ series.)
- To obtain the desired rotation angle, the rotation ends can be set within the range shown in the diagram by regulating the adjustment bolt or shock absorber.

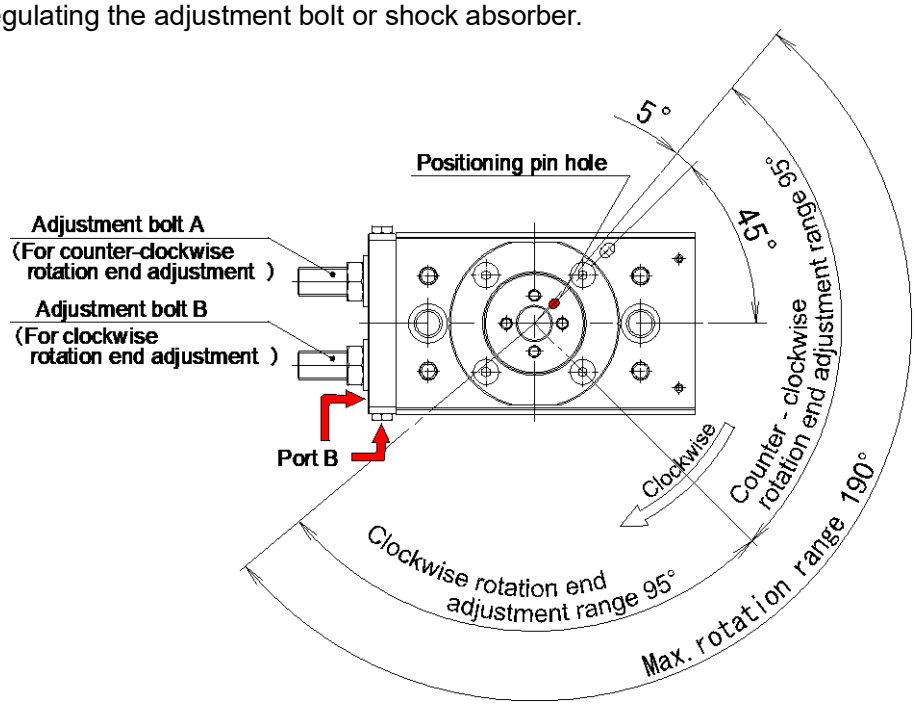

Fig. 3 Rotation direction and rotation angle

Note)
- The drawing shows the rotation range of the positioning pin hole.
- The pin hole position in the drawing shows counter-clockwise rotation end when the rotation angle is set at 180° by equally tightening the adjusting bolts A and B.
- Refer to the setting example of the rotation angle range. (Fig.4)

Table 9 shows adjusting angle per one rotation of adjust bolt (shock absorber).

Table 9. With adjustment bolt

Size	10	20	30	50
Rotation adjustment per single rotation of rotation adjustment screw	8.0°	5.7°	5.7°	6.4°

Note)
- Since the end of adjustment bolt of MSQ Series has a built-in cushion pad (or a bumper), when angle adjustment is made, push the piston completely while pressurizing (minimum operating pressure for cushion pad : 0.1MPa or more, minimum operating pressure for bumper : 0.3MPa or more) as shown in Figure 4. Please refer to page 50 for details.
- Adjustment of with internal shock absorber types should also be made by pushing the piston rod of shock absorber completely.

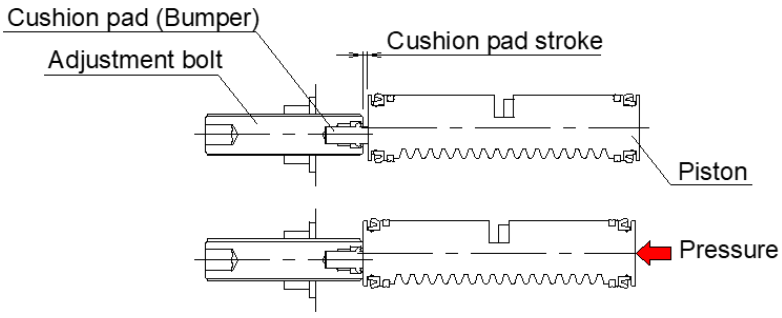

Fig. 4

Rotating range examples

[Standard type]

- Various rotation ranges are possible as shown in the drawings below using adjustment bolts A and B. (The drawings show the rotation range of the positioning pin hole.)
- The rotation angle can also be set on a type with internal shock absorber.

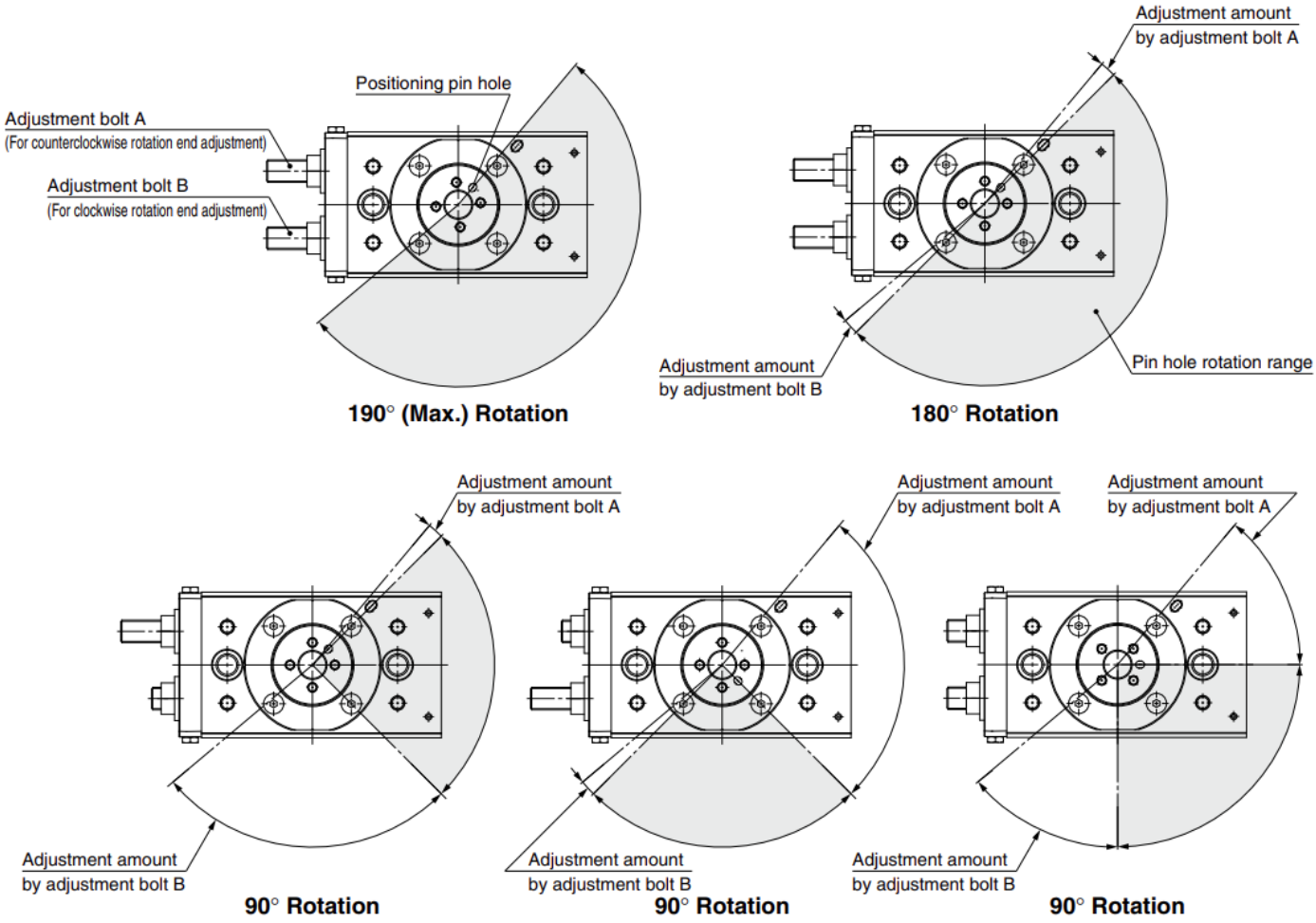

Fig. 5

[With external shock absorber type]

By adjusting shock absorber, the rotation end can be set within the ranges shown in the drawing.
(The drawings show the rotation range for the top positioning pin hole of the table.)

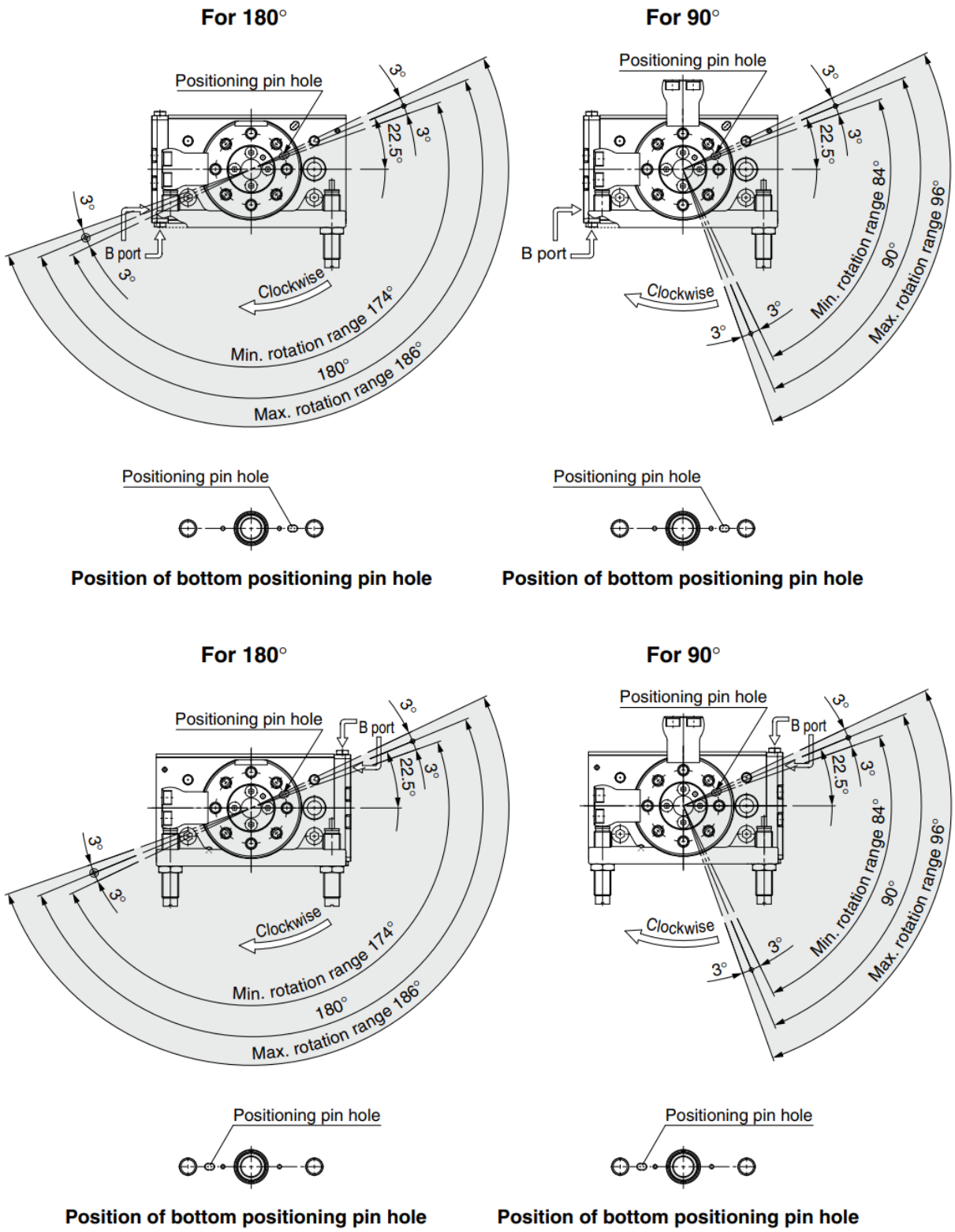

Fig. 6

Special angle adjustment tool

If it is difficult to adjust the angle with normal tools due to the installed condition, use the special tool specified below.

Table 10 shows the part number of the special angle adjustment tool and Table 11 shows the dimensions of the special tool.

※Please note that depending on the shape of the installed fitting, it may interfere with the tool and become unusable.

Table 10. Part number of special angle adjustment tool

Size	Part number
10	P8910195
20, 30	P8910295
50	P8910495

Table 11. Special tool dimensions [mm]

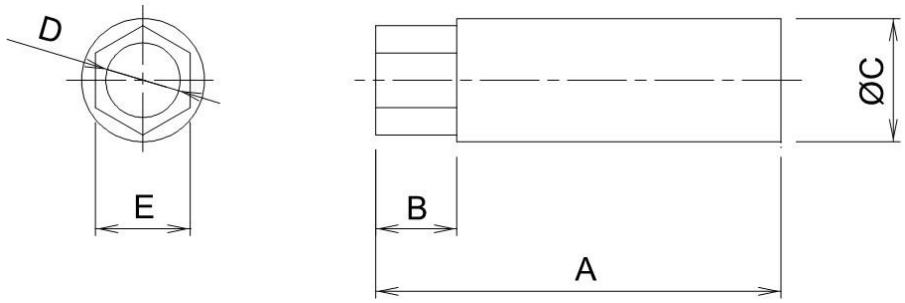

Part number	A	B	C	D	E
P8910195	50	10	16	10	12
P8910295	60	12	18.2	11	14
P8910495	80	15	24	17	19

Angle adjustment using the special tool

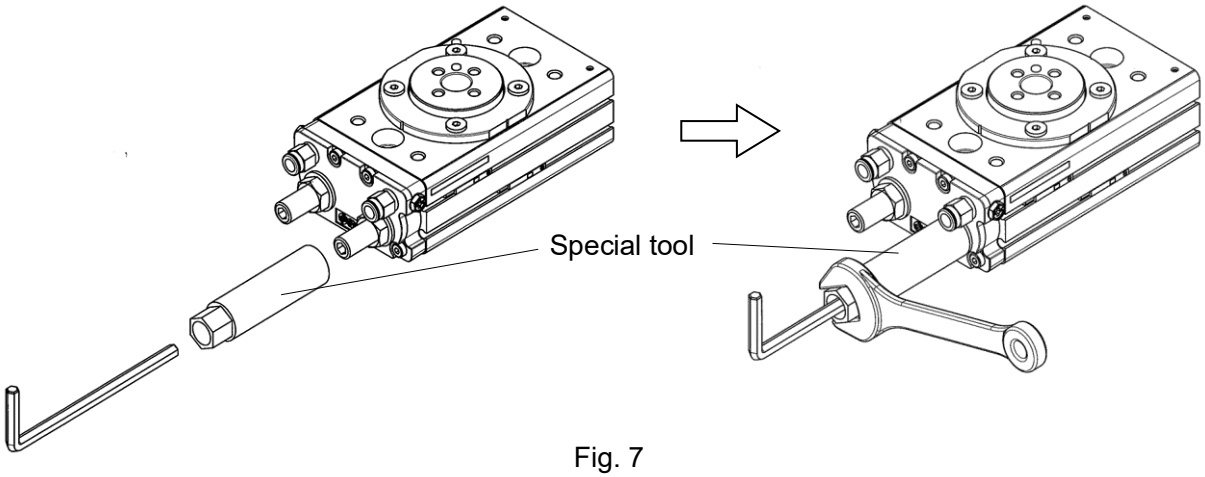

Fig. 7

Piping

Figure 8 and Table 12 show locations and sizes of piping ports.
Ports can be selected from two sides. Plug the ports that are not used.

Table 12. Port size

Size	Port size A1, B1	Port size A2, B2
10	M5x0.8	M5x0.8
20		
30	Rc1/8, G1/8 NPT1/8, NPTF1/8	
50		

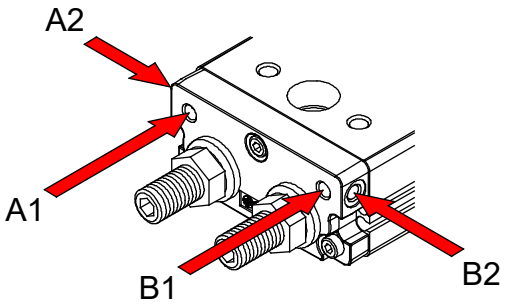

Fig. 8

Rotary table ports have a fixed orifice. Do not make the diameter of this hole larger by additional processing.
If the hole diameter is made larger, rotation speed and impact will increase, which may cause breakage of the product.

Preparation before piping.

a) Before piping is connected, it should be thoroughly blown out with air to remove dust and scale from inside the pipe. Dust and scale on the inlet side of the filter can be removed, but those on the outlet side cannot be removed, so they can enter the solenoid valve or rotary table, which causes malfunction or shortens product life.

b) When screwing piping or fittings into ports, ensure that chips from the pipe threads or sealing material do not enter the piping. Also, if pipe tape is used, leave 1.5 to 2 thread ridges exposed at the end of the threads.

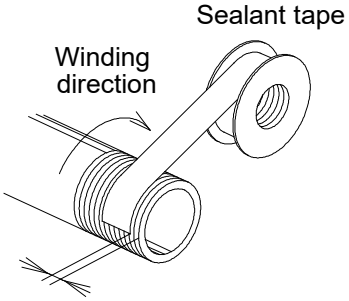

Fig. 9 Wrapping of pipe tape

Air supply

Air supplied to the rotary actuator shall be cleaned by the filter.
MSQ series is lubrication free.

Setting of rotation time

It is necessary to calculate the inertial load and kinetic energy in the application prior to setting the speed of the actuator. The inertial load generated in the application may be high even if the torque required in the application is low, this may lead to damage to the internal components of the actuator.

Moment of inertia

The moment of inertia indicates how hard it is to rotate an object, and also how hard it is to stop the object once it is rotating.
Any object rotated by a rotary table will have an inertial force.
When the rotary table stops at the stroke end, the actuator will receive a big impact (kinetic energy) due to the inertial force.
Please refer below for calculation of kinetic energy.

$$E = \frac{1}{2} \cdot I \cdot \omega^2$$

E: Kinetic energy [J]

I: Moment of inertia [$kg \cdot m^2$]

ω: Angle speed [rad/s]

Allowable kinetic energy for the rotary actuator is limited. The limit of rotation time is obtained by calculating the moment of inertia.
Please refer below to calculate the moment of inertia.

Basic moment of inertia

$$I = m \cdot r^2$$

m : Weight [kg]
r : Distance of rotational axis and load center of gravity [m]

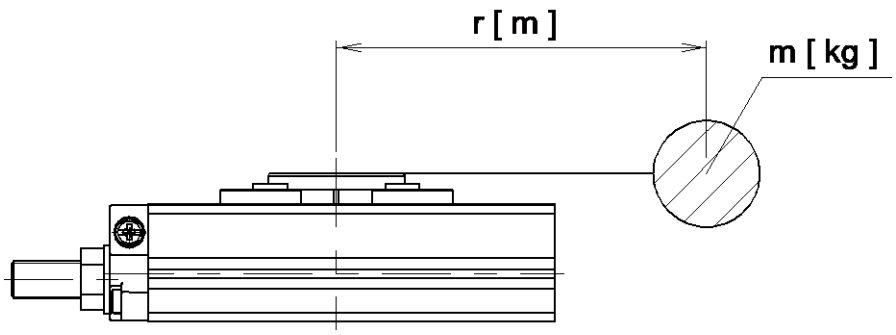

Fig. 10

This shows moment of inertia of “m (weight)” at “r” distance from the axis of rotation.
The calculation for the moment of inertia depends on the shape of the object.
Please refer to the table on the next page for the moment of inertia calculations.

Calculation formulae for moment of inertia

I: Moment of inertia [kg・m ²] m: Load mass [kg]

1. Thin shaft

Position of rotational axis: Perpendicular to the shaft through the center of gravity

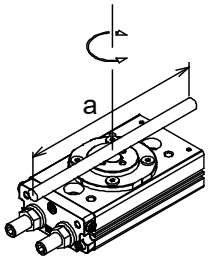

$$I = m \cdot \frac{a^2}{12}$$

2. Thin rectangular plate

Position of rotational axis: Parallel side b and through the center of gravity

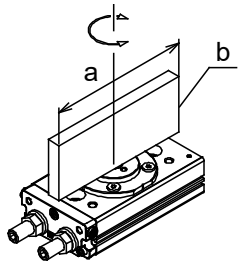

$$I = m \cdot \frac{a^2}{12}$$

3. Thin rectangular plate (Including Rectangular parallelepiped)

Position of rotational axis: Perpendicular to the plate through the center of gravity

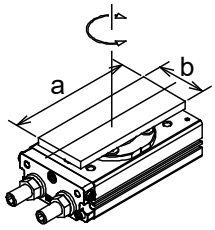

$$I = m \cdot \frac{a^2 + b^2}{12}$$

4. Round plate (Including column)

Position of rotational axis: Through the center axis

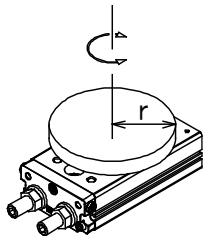

$$I = m \cdot \frac{r^2}{2}$$

5. Solid sphere

Position of rotational axis: Through the center of diameter

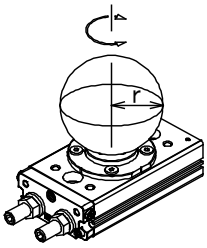

$$I = m \cdot \frac{2r^2}{5}$$

6. Thin round plate

Position of rotational axis: Through the center of diameter

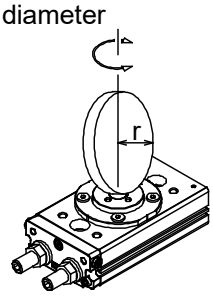

$$I = m \cdot \frac{r^2}{4}$$

7. Cylinder

Position of rotational axis: Through the center of diameter and gravity

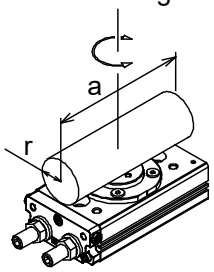

$$I = m \cdot \frac{3r^2 + a^2}{12}$$

8. When the rotational axis and load center of gravity are not consistent

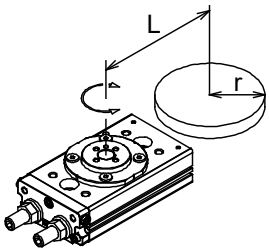

$$I = K + m \cdot L^2$$

K: Moment of inertia around the load center of gravity

4.Round plate $K = m \cdot \frac{r^2}{2}$

9. Gear transmission

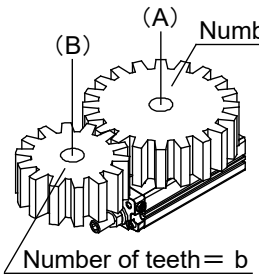

1. Find the moment of inertia I_B for the rotation of shaft (B).
2. I_B is converted to the rotation of the shaft (A).

$$I_A = \left(\frac{a}{b}\right)^2 \cdot I_B$$

Kinetic energy

Table 13 shows the allowable kinetic energy of the rotary table.
The end angle speed ω is obtained by:

$$\omega = \frac{2\theta}{t}$$

θ : Rotation angle [rad]
t : Rotation time [s]

Table 13. Allowable kinetic energy [J]

Size	Allowable kinetic energy				
	Cushion pad	Bumper	Internal shock absorber	External shock absorber	
				Low energy	High energy
10	0.007	0.014	0.039	0.161	0.231
20	0.025	0.050	0.116	0.574	1.060
30	0.048	0.096	0.116	0.805	1.210
50	0.081	0.162	0.294	1.310	1.820

Kinetic energy E is obtained by:

$$E = \frac{1}{2} \times I \times \omega^2$$

Therefore, the rotary table rotation time is:

$$t \geqq \sqrt{\frac{2 \times I \times \theta^2}{E}}$$

E: Allowable kinetic energy [J]
θ : Rotation angle [rad]
I: Moment of inertia [kg・m^2]

During uniform acceleration, the angle speed ω after t seconds can be found as follows.

$$\omega = \dot{\omega} \cdot t \qquad \cdots (1)$$

$$\theta = \int \dot{\omega} t dt = \frac{1}{2}\dot{\omega} t^2 + C \qquad \cdots (2)$$

C : Integration constant

When $t = 0$, rotation angle θ =0, so the integration constant is C=0.

$$\theta = \frac{1}{2}\dot{\omega} t^2 = \frac{1}{2}\omega t$$

thus,

$$\omega = \frac{2\theta}{t}$$

Auto switch

The rotary table has a magnet mounted on its piston and an auto switch on the outside of the body to detect the piston position (table position). Rotary tables have a short piton stroke, so detection should be done at the stroke end.
Refer to page 18, 19 for mountable auto switches.

Internal structure and operation principle

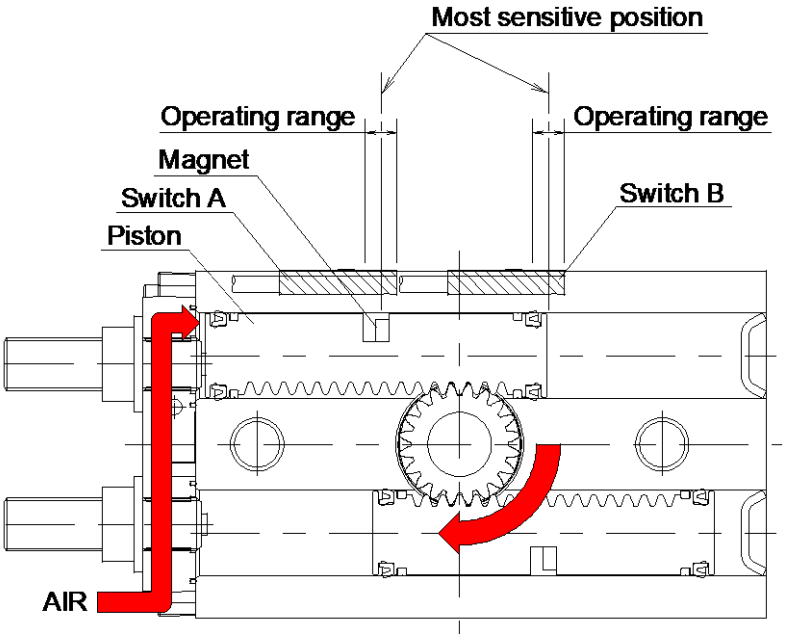

Fig. 11

When switch A is turned on and pressure is supplied in the direction indicated by the arrows in Fig. 11, the piston moves and the table rotates clockwise.
At this point, magnet A goes out of switch A's operation range to turn off switch A. Then the piston moves further, and the magnet goes into switch B's operation range to turn on switch B.

Mounting of auto switch

When tightening the auto switch mounting screw, use a precision screwdriver with a handle of 5 to 6 mm in diameter.
Table 14 shows the recommended tightening torque.
Use the designated slotted set screw (M2.5×4L) to mount the auto switch.

Table 14. Recommended tightening torque

Auto switch model	Recommended tightening torque [N・m]
D-M9□	0.05 to 0.15
D-M9□A (Water resistant)	0.05 to 0.10
D-A9□	0.10 to 0.20

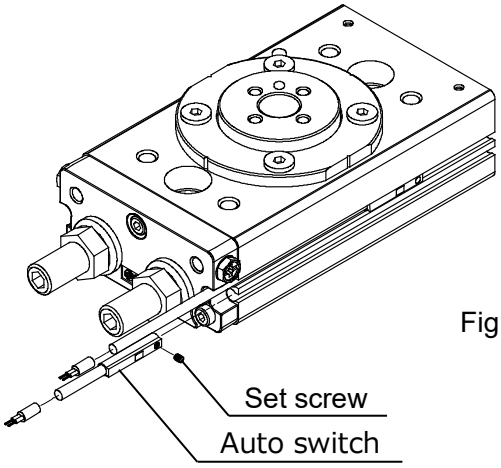

Fig. 12

Auto switch proper mounting position at rotation end

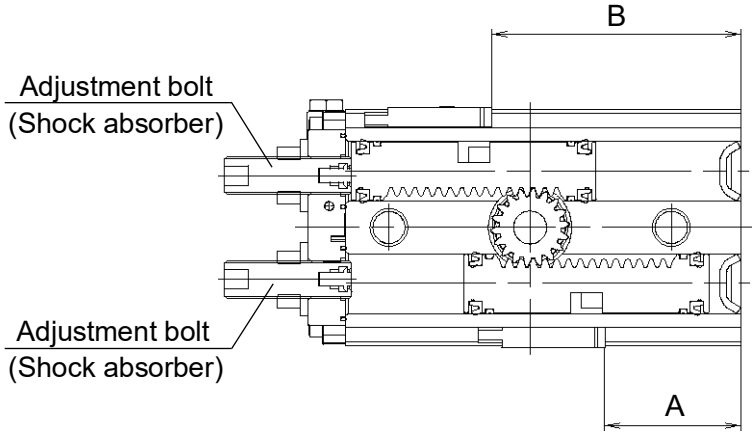

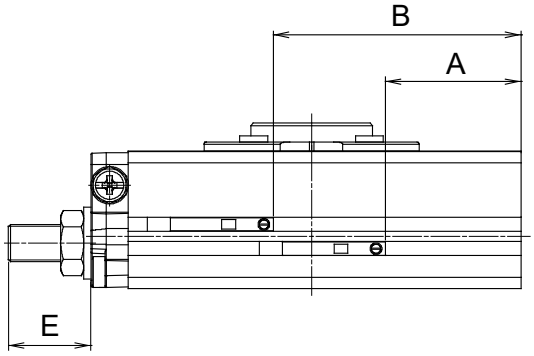

Table 15. Dimension E [mm]

Size	Adjust-ment bolt	Shock absorber
10	17	31
20	25	35
30	23	33
50	33	53

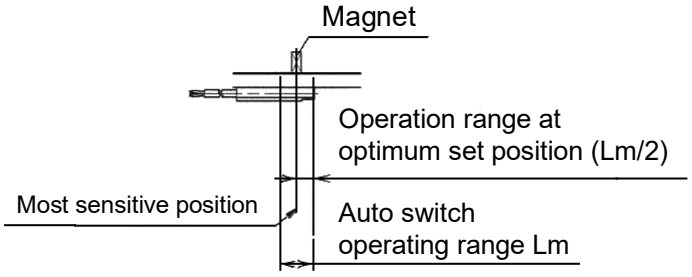

Fig. 13

Table 16. Auto Switch Proper mounting position / Operating range / Hysteresis

Size	Rotation angle (deg)	Solid state switch				Reed switch			
		A (mm)	B (mm)	Operating range θm(deg)	Hysteresis range(deg)	A (mm)	B (mm)	Operation range θm(deg)	Hysteresis range(deg)
10	180	26 to 29	49 to 51	27	3	22 to 25	45 to 47	50	4
20	180	34 to 37	66 to 68	21	2	30 to 33	62 to 64	42	4
30	180	39 to 41	70 to 73	24	2	35 to 37	66 to 69	44	4
50	180	46 to 48	88 to 91	19	2	42 to 44	84 to 87	31	3

Operating range θm: The value in which the auto switch operating range “Lm” is converted to axis rotating value.
Hysteresis range : Value of auto switch hysteresis converted to an angle.

Note) ・The above values are only provided as a guideline, and they are not guaranteed.
In the actual setting, adjust them after confirming the auto switch operating condition.
・The values above show the position when the adjustment bolt (or shock absorber) is screwed in by the same amount (Refer to Table 15).

Maintenance and Inspection

Periodic inspection is necessary for optimal performance. In general, annual inspection is recommended or the rotary table. Even if no issues are found, replacement of the seal components is recommended every three years. If components such as the table pinion, piston, or bearings are damaged, the actuator may have been operated outside the specified conditions. Please review your operating conditions. In such cases, please return the defective actuator to SMC and be sure to request repair from us.

Regular check

Check the following for periodic inspection

(1) If the rotary actuator set screw has become loose
(2) If the rotary actuator set frame has become loose
(3) Is the operation smooth?
(4) Is there any leakage to outside?

If any items are found during the inspection that require repairing or tightening, either tighten the loose components or the rotary table must be replaced.

Replacement procedure of the seal kit

■Cautions for disassembly

(1) The high precision type cannot be disassembled because some of its components are press-fitted during assembly.
(2) Disassembling the product will avoid SMC's warranty. If disassembly is really necessary it is recommended to fully understand the internal construction before disassembling the products.
(3) Disassemble in a clean and spacious workplace.
(4) Cover the rotary actuator pipe inlet and the end of rubber hose after removing the rotary table.
(5) Be careful to ensure not to damage internal sliding surface of the rotary table when disassembling it.
(6) Please consult with us when you have any questions on disassembling and inspection.

Table 17. Replacement parts (For Standard type)

Description	Size											
	10			20			30			50		
Seal kit	P891010-5			P891020-5			P891030-5			P891040-5		
Parts included in seal kit	No.	Description	Qty.	No.	Description	Qty.	No.	Description	Qty.	No.	Description	Qty.
	9	Gasket	1	9	Gasket	1	9	Gasket	1	9	Gasket	1
	12	Wear ring	4	12	Wear ring	4	12	Wear ring	4	12	Wear ring	4
	13	Piston seal	4	13	Piston seal	4	13	Piston seal	4	13	Piston seal	4
	18	Seal washer	2	18	Seal washer	2	18	Seal washer	2	18	Seal washer	2

Please refer to Page 23 for the product construction.

Table 18. Replacement parts (For With external shock absorber type)

Description	Size											
	10			20			30			50		
Seal kit	P891010-10			P891020-10			P891030-10			P891040-10		
Parts included in seal kit	No.	Description	Qty.	No.	Description	Qty.	No.	Description	Qty.	No.	Description	Qty.
	6	Gasket	1	6	Gasket	1	6	Gasket	1	6	Gasket	1
	9	Wear ring	4	9	Wear ring	4	9	Wear ring	4	9	Wear ring	4
	10	Piston seal	4	10	Piston seal	4	10	Piston seal	4	10	Piston seal	4

Please refer to Page 24 for the product construction.

Each replacement part is supplied with a grease pack (10g).
When only a grease pack is needed, order with the following part number.
Grease pack part number : GR-L-010

■Disassembly procedure

(Only the basic type, the high precision type cannot be disassembled.)

Standard type

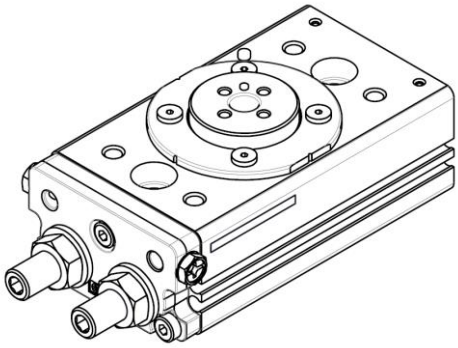

With table

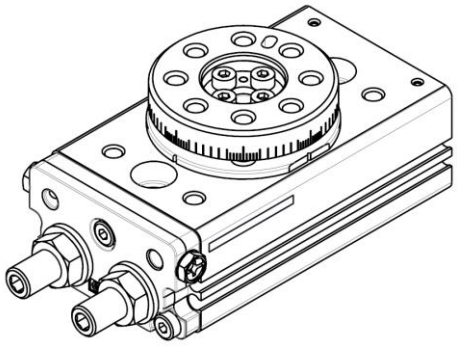

Interchangeable mounting type

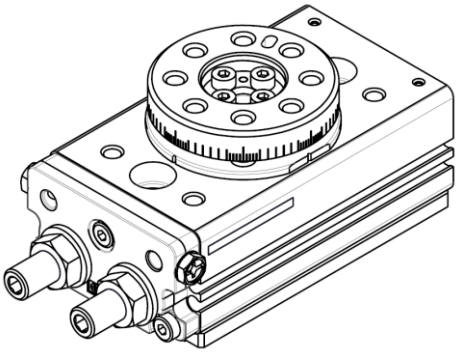

With external shock absorber

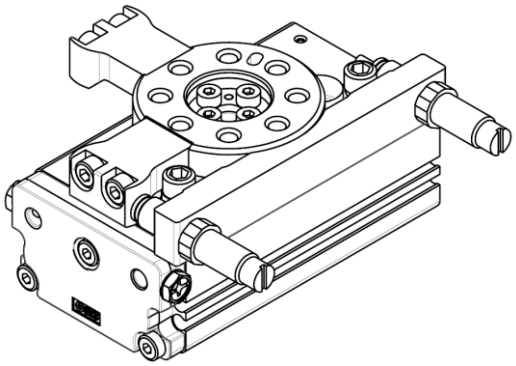

Fig. 14

(1) Loosen the hexagon socket head cap screws and remove the table and parallel pin (already pressed in to the table).

∗For With external shock absorber type, With table type, and Interchangeable mounting type.

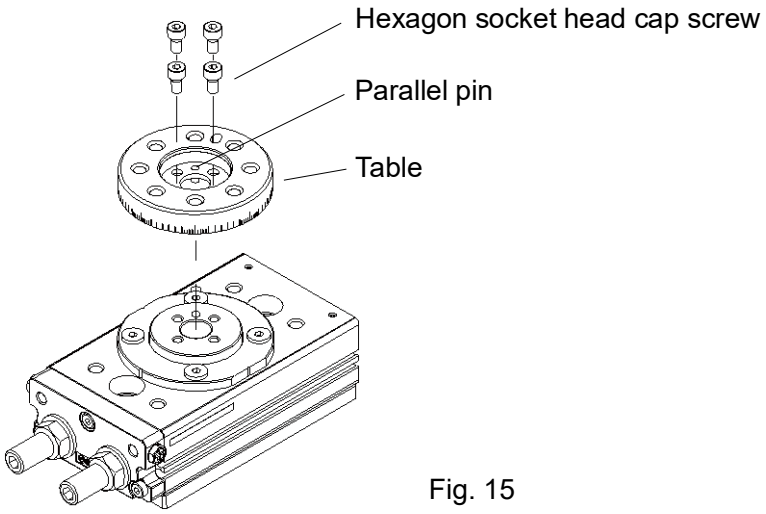

Fig. 15

(2) Loosen hexagon socket super thin head cap screw to remove the bearing retainer.

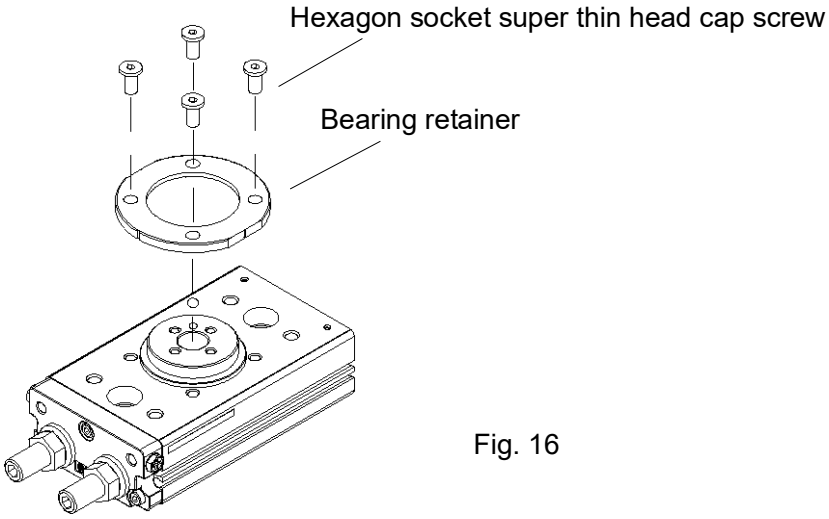

Fig. 16

(3) Pull out the table pinion from the body.

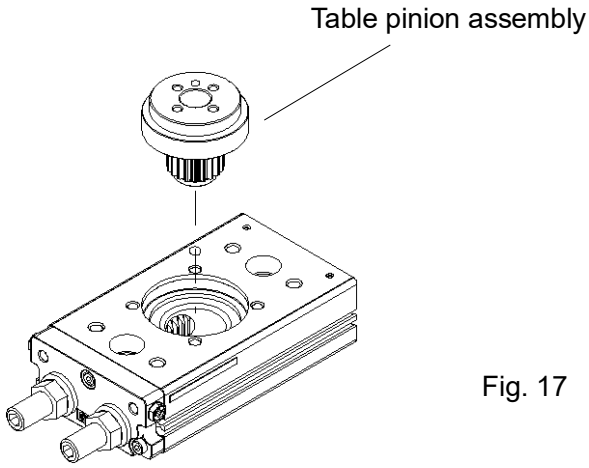

Fig. 17

(4) Loosen the hexagon socket thin head cap screw to remove the end cover assembly.

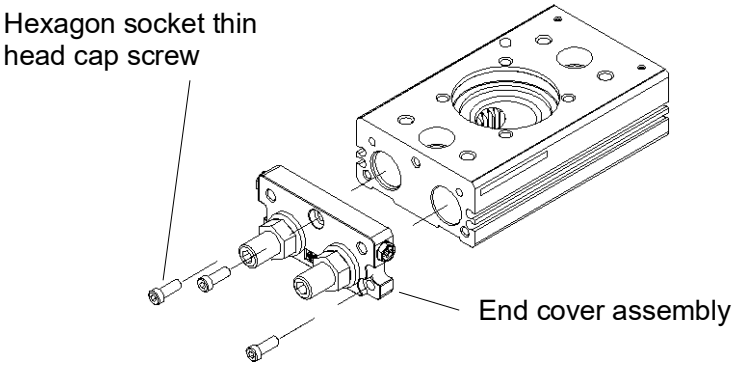

Fig. 18

(5) Pull out the 2 piston assemblies by hooking the piston rack. (Piston assemblies are visible from the center hole of the body.)

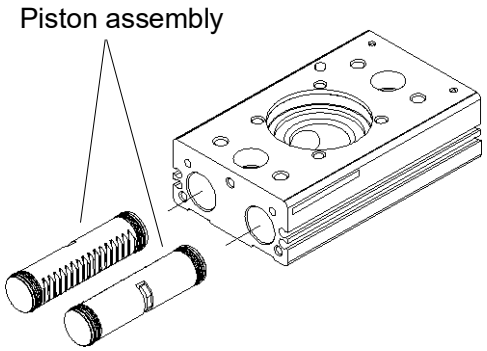

Fig. 19

(6) Take out the bearing from the body.

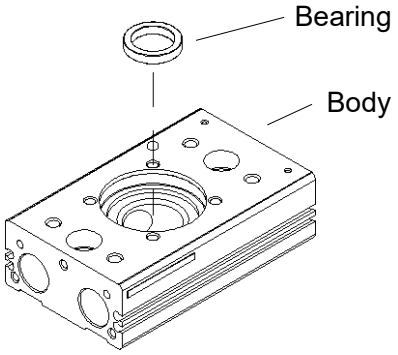

Fig. 20

■Assembly procedure

(1) Clean each component sufficiently before assembly to prevent dust from sticking to them.
Apply the grease which is included in the seal kit to each part shown in Table 19 The correct amount of grease to be applied should be enough so there is a thin film on the surface of components which is shiny to the eye.

Table 19. Parts where grease is to be applied

Grease applied parts	Grease
Cylinder internal surface	GR-L-010
Piston packing groove	
Piston seal	
Gasket	

Body assembly

Apply grease after wiping the inside of the cylinder with alcohol and mount the bearing on the housing.

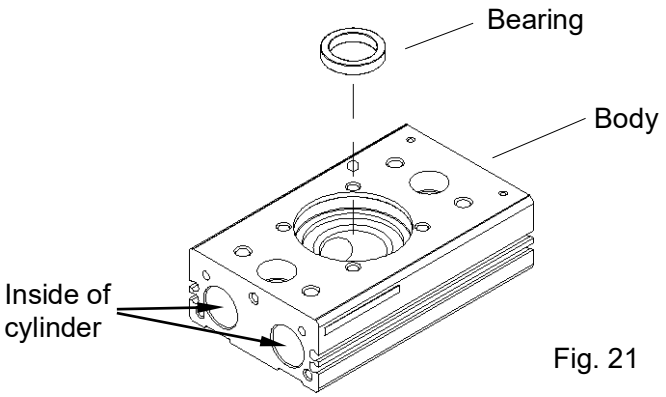

Fig. 21

Piston assembly

Pay attention to the installation direction of the piston seal as the direction is specified.
Then mount the piston seal to the piston, taking care not to damage the piston seal.
Pay attention to the direction of the piston seal and wear ring (size 50 only).

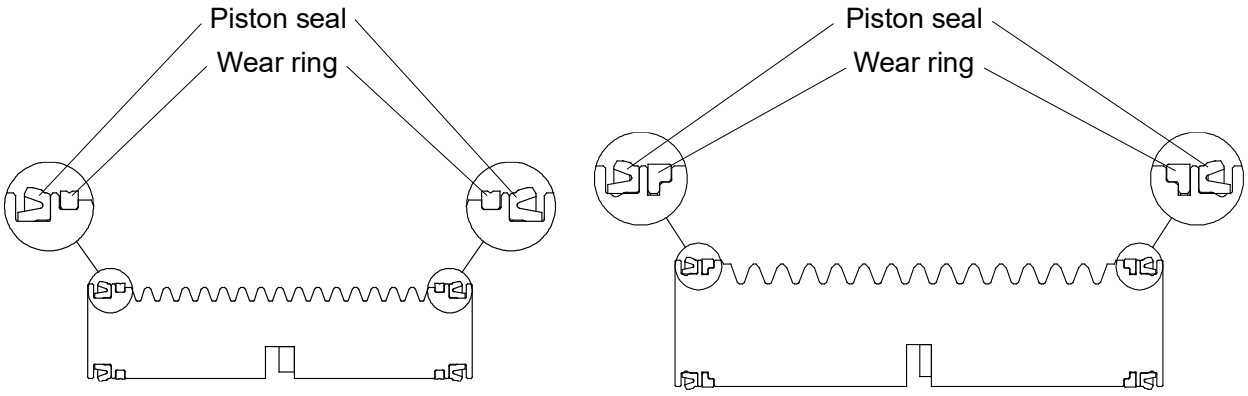

Size 10・20・30 Size 50

Fig. 22

End cover assembly

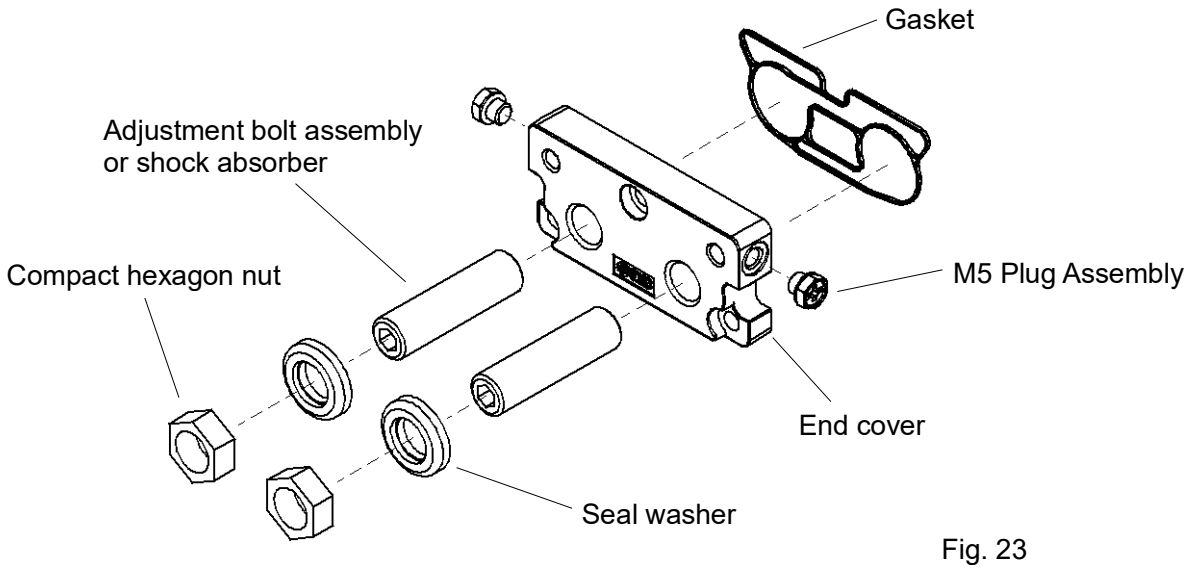

Fig. 23

Table 20

Size	Recommended tightening torque [N・m]	
	Adjustment bolt assembly Shock absorber	M5 plug assembly
10	1.00 to 1.67	1.30 to 1.50
20,30	1.88 to 3.14	
50	6.48 to 10.8	

(2) Insert the piston assembly into the body assembly. At this time, the piston seals pass the center hole of the body and should be pressed inward not to be cut on the edge of bore.
Also, pay attention to the piston assembly does not hit the head cap.

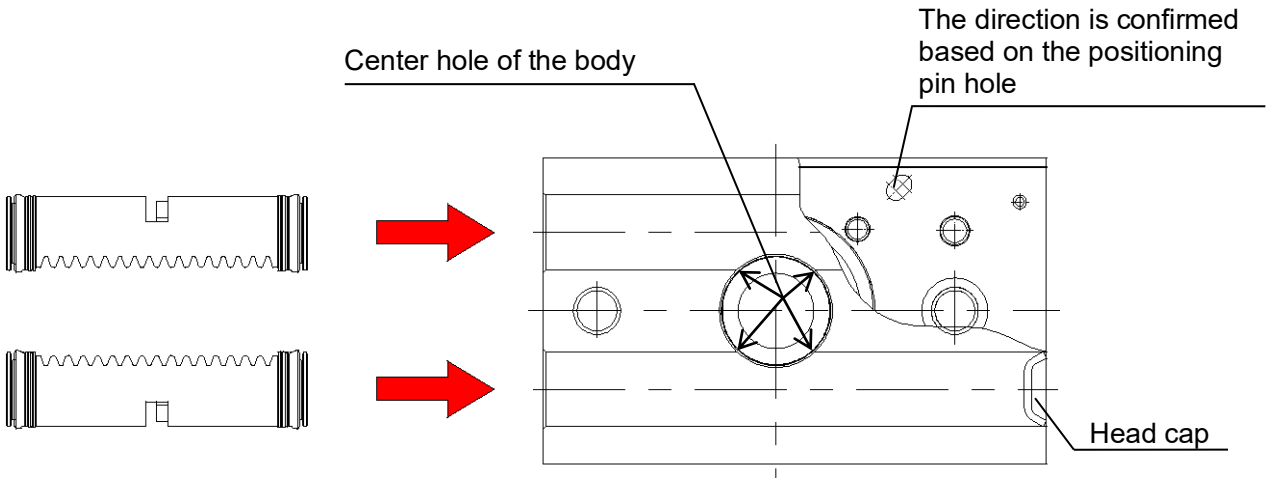

Fig. 24

(3) Hold the piston in place and install the pinion gear on the piston.
Figure 25 shows the piston position and Figure 26 shows the table pinion assembly angle.

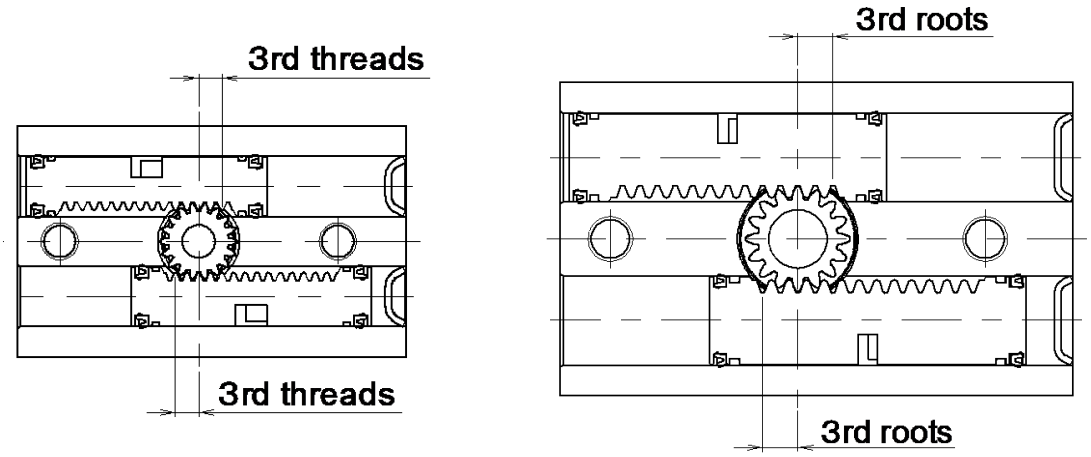

Size 10・20

Size 30・50

Fig. 25

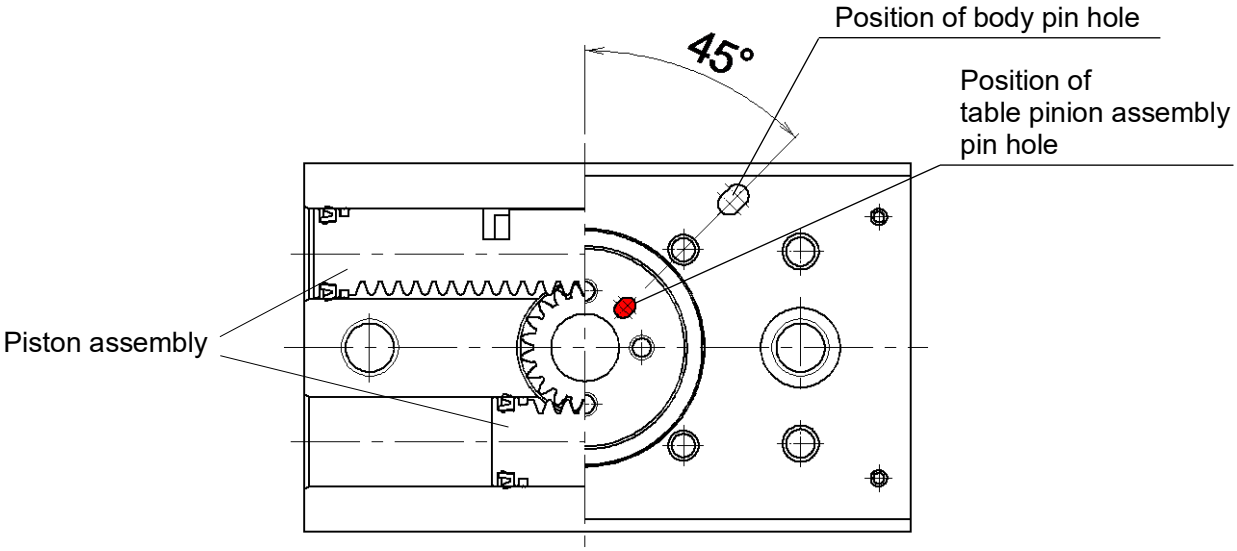

Fig. 26

(4) Mount the table pinion and bearing retainer on the body.
Pay attention to the direction of the bearing retainer.

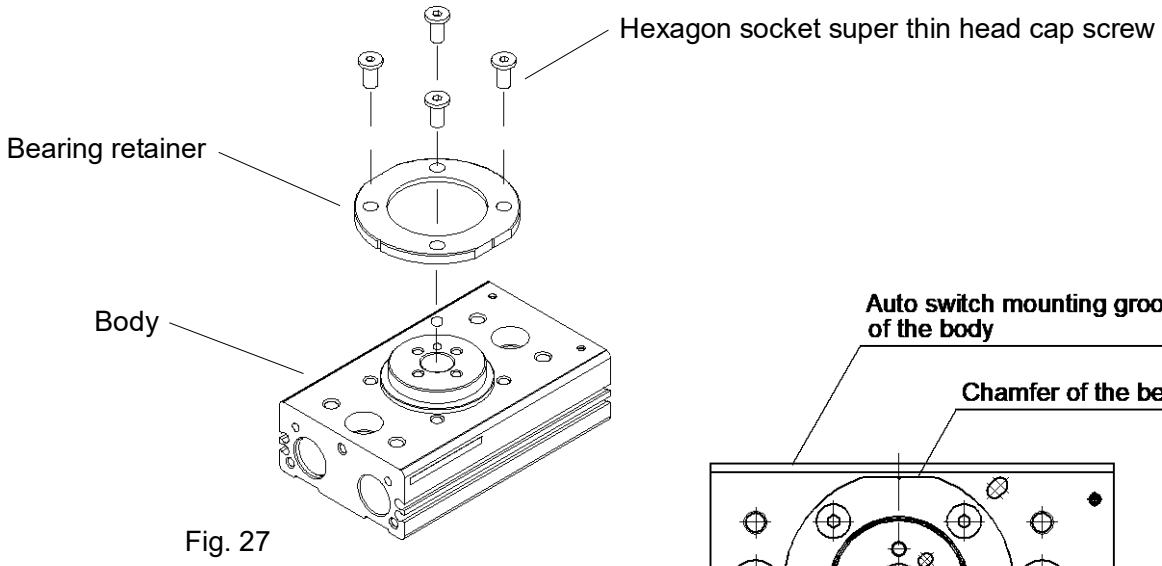

Fig. 27

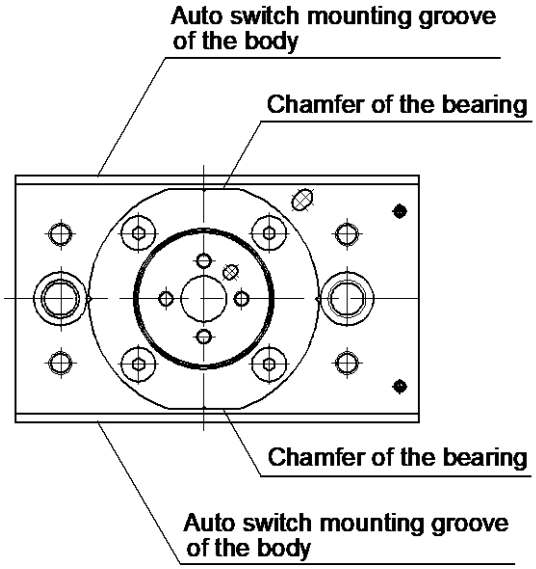

Fig. 29

Table 21

Size	Recommended tightening torque [N・m]
10	0.56 to 1.00
20,30	1.94 to 3.50
50	2.78 to 5.00

(5) Mount the end cover assembly on the body.

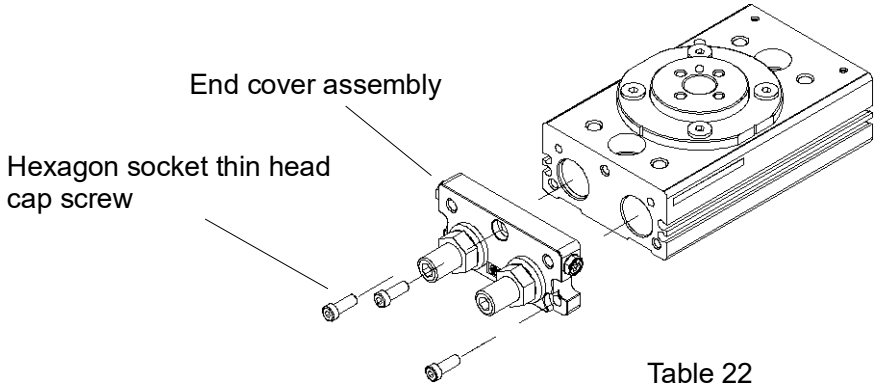

Fig. 29

Table 22

Size	Recommended tightening torque [N・m]
10,20,30	1.50 to 2.70
50	3.00 to 5.40

(6) Mount the table and parallel pin (already pressed in to the table) to the table pinion assembly.
∗For With external shock absorber type, With table type, and Interchangeable mounting type.

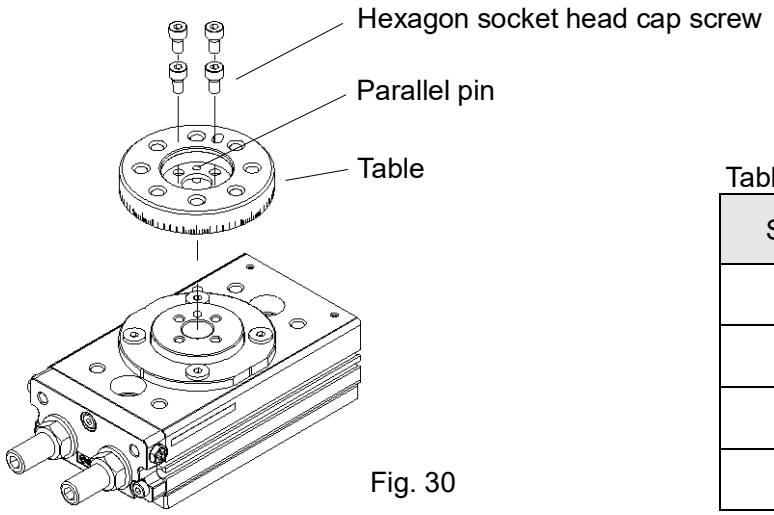

Fig. 30

Table 23

Size	Recommended tightening torque [N・m]
10	1.10 to 3.10
20	2.90 to 4.90
30	4.90 to 6.90
50	7.40 to 9.80

(7) When retrofitting the plate unit, ensure that the plate is assembled in the correct orientation.

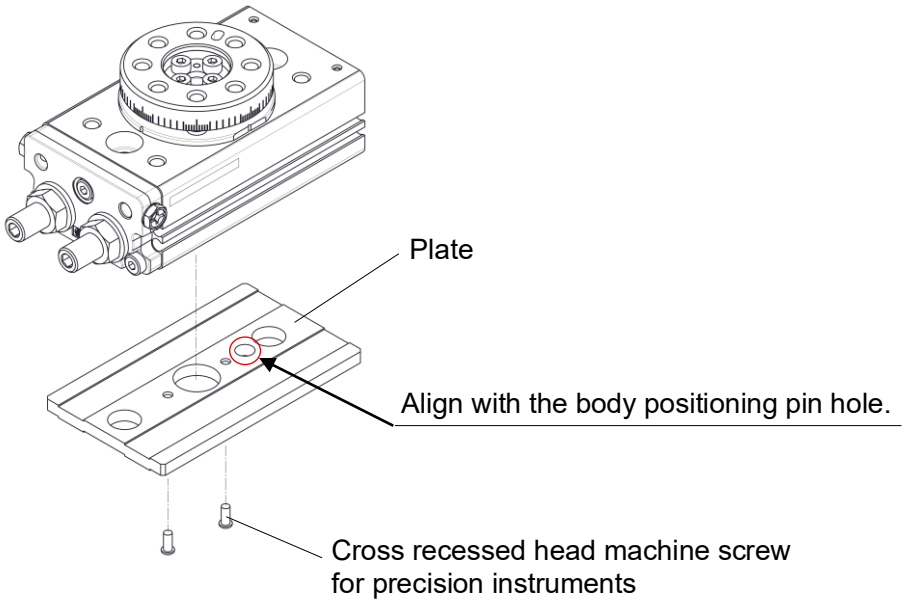

Fig. 31

Table 24

Size	Recommended tightening torque [N・m]
10 to 50	0.4 to 0.5

(8) Perform operation test after assembling and check external leakage.

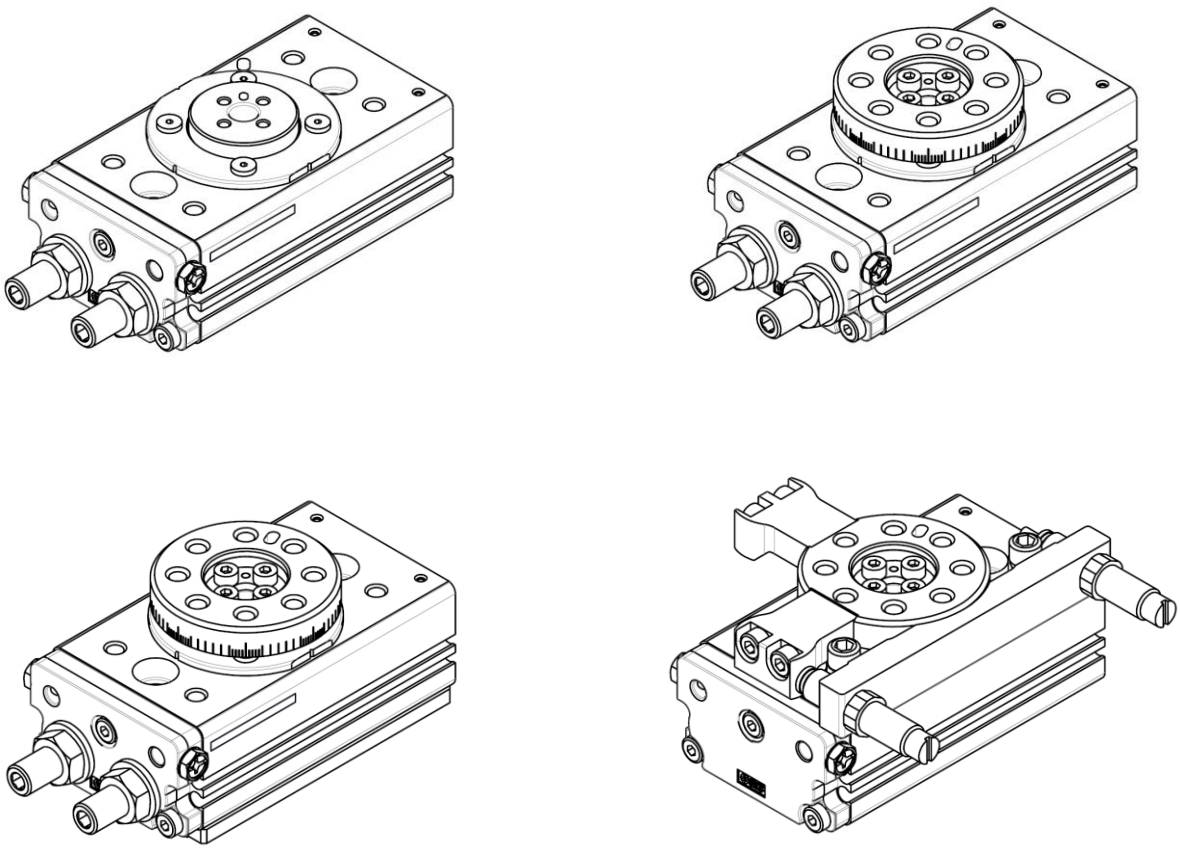

Fig. 32

Specific product precautions

Speed Adjustment

⚠ Caution

1. When operating at high speed with a large load weight, a large amount of energy is applied to the actuator and can cause damage. Calculate a correct operation time by referencing the model selection procedure.

2. Supply pressure should be 0.3MPa or more when the product is used at its maximum operating speed (Min. rotation time of around 0.2s/90°)

Lubrication

⚠ Caution

1. Use the product without lubrication.

This product is lubricated with grease at the factory, and further lubrication will result in a failure to meet the product's specifications.

Effective torque

⚠ Caution

1. The effective torque at the end of the rotation is half the effective torque generated during rotation. This is because one of the pistons of the double rack mechanism determines the angle by coming into contact with an adjustment bolt or a shock absorber at the rotation end.

Rotating angle adjustment

⚠ Caution

1. As a standard feature, the rotary table is equipped with an angle adjustment mechanism (adjustment bolt or shock absorber) that can be used to adjust the rotating angle. Refer to page 30 to 32 for the rotation direction, rotating angle, and rotating angle range examples.

2. Take the complete compression into consideration when the rotation angle of bumper type is adjusted.

The product of bumper type is operational even when the complete compression force is not reached. When the accuracy at the rotation end is necessary, use it with a pressure of 0.3MPa or more.

The table on the right shows the rotation angle corresponding to the complete compression of the bumper allowing the piston to reach the end of stroke.
The values in the table are for reference only.

Size	Angle
10	16°
20	12°
30	12°
50	15°

3. For with external shock absorber, the angle must be adjusted before mounting the load depending on the shape of the load. (Refer to page 32 for angle adjustment.)

Absorption of kinetic energy

⚠ Caution

1. Three types of cushion are available for the product. Cushion pad, bumper and shock absorber. These are for protecting the product by absorbing the kinetic energy of the workload. Not for a smooth stopping operation. For smooth stopping of the workload, it is necessary to install an appropriately sized shock absorber externally on the product based on the operating conditions.

Cushion pad and bumper

⚠ Caution

1. The material of the piston is different between products with cushion pads or bumpers and products with shock absorbers.
Since it may damage the piston, do not attach shock absorbers to products with cushion pads or bumpers.

Adjustment bolt assembly

Size	Part no.	
	Cushion pad	Bumper
10	P391010-3	P891010-3
20	P391020-3	P891020-3
30		
50	P391040-3	P891040-3

*Two sets are required for each product.
*Refer to page 45, for the replacement procedure.

Shock absorber

⚠ Caution

1. Never rotate the bottom screw of the shock absorber.(It is not an adjustment screw.)
This may cause oil leakage.

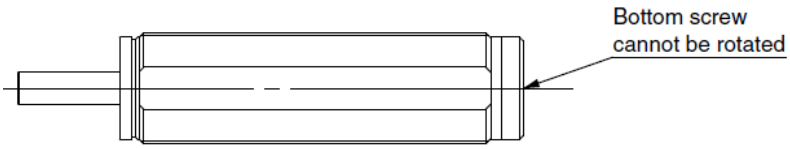

2. Shock absorbers are consumable parts.
When a decrease in energy absorption capacity is noticed, it must be replaced.
Allowable operation time under the specifications set in this catalog is 1 million.

∗ Specified service life (suitable replacement period) is the value at room temperature (20 to 25°C).
The period may vary depending on the temperature and other conditions. In some cases the absorber may need to be replaced before the allowable operation time above.

Size	Shock absorber model		
	With internal shock absorber	With external shock absorber	
		For low energy	For high energy
10	RBA0805-X692	RB0805	RB0806
20	RBA1006-X692	RB1006	RB1007
30			
50	RBA1411-X692	RB1411	RB1412

* Two sets are required for each product.
* Refer to page 45, for the replacement procedure.
* Pay attention that the hexagon nuts of the shock absorbers for size 10 external absorbers are directional. Mount it so that the surface without chamfers is the seating surface.

Mounting

⚠ Caution

1. Keep away from objects which are influenced by magnets.
Since this product has a built-in magnet, do not allow close contact with magnetic disk, cards, or tapes. Data may be erased.

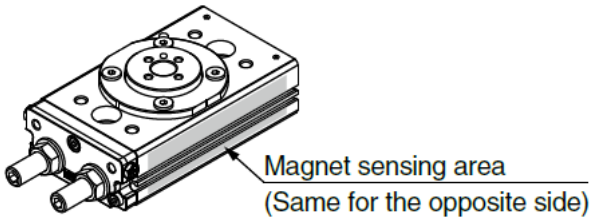

2. When using the center hole for piping, take care that the tube O.D., auto switch lead wire, etc., do not contact the mounting plate.

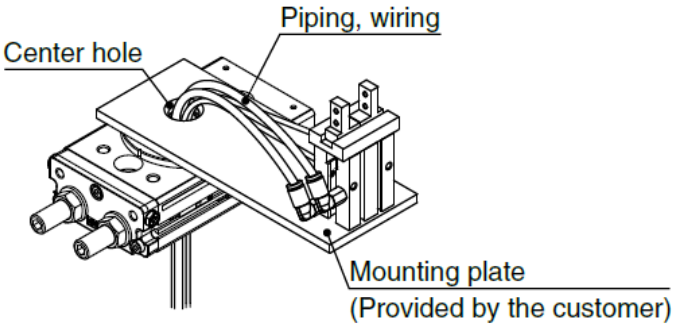

External shock absorber

⚠ Warning

1. Never place your hands or fingers between the arm and the shock absorber.
Be very careful to prevent your hands or fingers from getting caught in the gap between the arm and the shock absorber when air is applied.

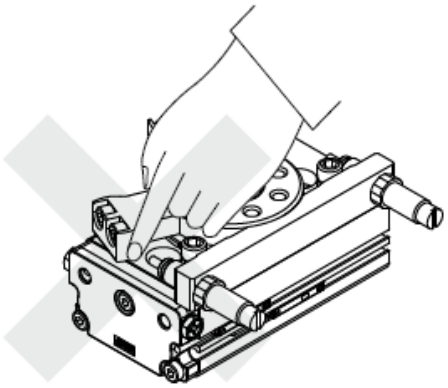

⚠ Caution

1. Abrasion powder may be generated from the part where the shock absorber collides with the arm. Do not use the product in a place where abrasion powder may affect adversely.

Troubleshooting

Problem	Possible cause	Solution
Rotary table does not move	Supply pressure is not applied correctly.	Correctly set the regulator at the supply pressure side.
	The directional switching valve (such as a solenoid valve) does not switch.	Correctly apply a signal to the directional switching valve (such as a solenoid valve).
	Air leakage from piping.	Inspect the piping and stop the leakage.
	The restrictor in the port is clogged.	Clean the restrictor. Take the following countermeasures: (1) Blow air through the piping again. (2) Inspect the air filter.
Operation is not smooth. (stick-slip)	The load has some friction.	Reduce the friction resistance.
	The rotation table and the item used with it are not aligned.	Align the two centers or use a flexible fitting.
	Insufficient output due to a low supply pressure.	To obtain stable operation, adjust the supply pressure to make the load ratio appropriate.
	Speed controller is restricted too much.	Adjust the speed controller so that the rotating marks will be in the adjusting range.
Extreme rotating angle changes.	Internal parts are broken.	Replace the rotary table with the new one. After that, take the measures below. ・Calculate the kinetic energy applied to the rotary table and adjust the load and rotation speed to make the value within the allowable kinetic energy. ・Mount an external stopper or shock absorber to absorb the impact force. In this case, adjust so that the adjusting bolt does not come into contact with the piston. Set the rotation end with an external stopper.

Problem	Possible cause	Solution
Air leakage from the table	Piston seal is worn out.	The seal parts need to be replaced. Contact SMC.
The pinion gear is broken.	Excessive kinetic energy was applied to the rotary table.	Replace the rotary table with the new one. After that, take the measures below. ・Calculate the kinetic energy applied to the rotary table and adjust the load and rotation speed to make the value within the allowable kinetic energy. ・Mount an external stopper or shock absorber to absorb the impact force. In this case, adjust so that the adjusting bolt does not come into contact with the piston. Set the rotation end with an external stopper. ・Do not apply external torque to the product that exceeds the rated output.
	Excessive external torque was applied to the rotary table.	
Insufficient rotating Angle.	The adjustment bolt for angle adjustment is set at a smaller angle than required.	Set the adjustment bolt correctly.
The auto switch will not operate or operates incorrectly.	The auto switch is mounted in an inappropriate position.	Mount the auto switch in the correct position.
	Effect of an external magnetic field.	Check that there is no strong magnetic field present.
	Trouble with the electrical circuit	Check that there is no trouble with the electrical circuit.
	Trouble with the electrical specification	Check there is no trouble with the electrical specification.

Revision history
C: Initial release. D: Added bumper type variations. E: Added external shock absorber type variations. F: Revised safety instructions. G: Added high precision type variations.

SMC Corporation

Tel: + 81 3 5207 8249 Fax: +81 3 5298 5362
URL https://www.smcworld.com

Note: Specifications are subject to change without prior notice and any obligation on the part of the manufacturer.
© SMC Corporation All Rights Reserved