Doc. no. LEC-OM07102

Operation Manual

PRODUCT NAME

AC Servo Motor Driver

MODEL / Series/ Product Number

LECYU Series

SMC Corporation

Introduction

This manual describes information required for designing, testing, adjusting, and maintaining LECYU Series driver.
Keep this manual in a location where it can be accessed for reference whenever required. Manuals outlined on the following page must also be used as required by the application.

- Description of Technical Terms
  The following table shows the meanings of terms used in this manual.

Term	Meaning
M-III Model	MECHATROLINK-III communications reference used for driver interface
Servo ON	Power to motor ON
Servo OFF	Power to motor OFF
Base Block (BB)	Power supply to motor is turned OFF by shutting off the base current to the power transistor in the current amplifier.
Servo Lock	A state in which the motor is stopped and is in position loop with a position reference of 0.
Main Circuit Cable	Cables which connect to the main circuit terminals, including main circuit power supply cables, control power supply cables, motor cables, and others.
Transmission Cycle	The transmission cycle is the cycle in the MAC (Media Access Control) layer. It is the communication cycle for physically sending data to the transmission path. The transmission cycle is unaffected by the services pro- vided by the application layer.
Communication Cycle	The communication cycle is the cycle for application layer. The communication cycle is set to an integral multiple of the transmission cycle.
Synchronous Commands (Classification S)	For commands of this type, commands are sent and response are received every communication cycle. The WDT (Watchdog Timer) in the frames are refreshed and checked every communication cycle. Synchronous commands can be used only during synchronous communications (Phase 3).
Asynchronous Commands (Classification A)	For commands of this type, commands are sent and response are received asynchronously to the communication cycle. Subsequent commands can be sent after confirming the completion of processing of the slave station that received the command. The WDT (Watchdog Timer) in the frames are not checked.
Common Commands	Commands that are common for MECHATROLINK-III communications, independent of profiles
Servo Commands	Commands that are defined in the standard servo profile and specific to DRIVERs
Motion Commands	Among servo commands, the following commands are called motion commands. INTERPOLATE, POSING, FEED, EX_FEED, EX_POSING, ZRET, VELCTRL, TRQCTRL

- Notation Used in this Manual

  - Notation for Reverse Signals

    The names of reverse signals (i.e., ones that are valid when low) are written with a forward slash (/) before the signal name.

    Notation Example

    $\overline{\text{BK}}$ = /BK

  - Notation for Parameters

    The notation depends on whether the parameter requires a value setting (parameter for numeric settings) or requires the selection of a function (parameter for selecting functions).

  - Parameters for Numeric Settings

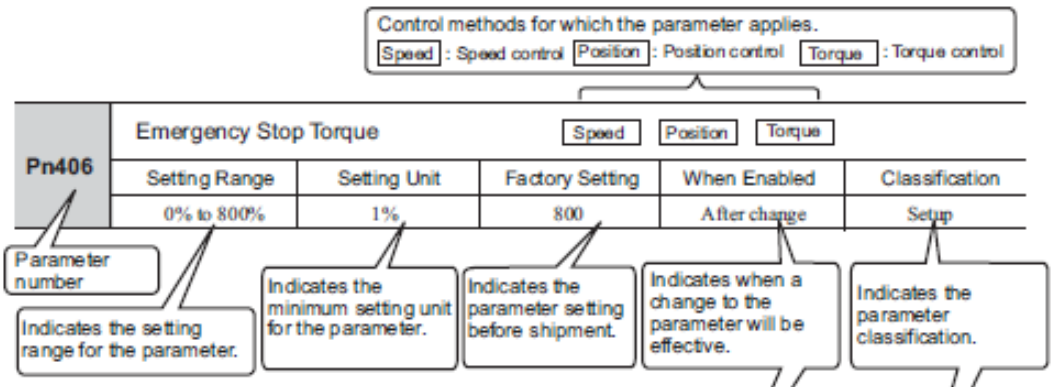

  - Parameters for Selecting Functions

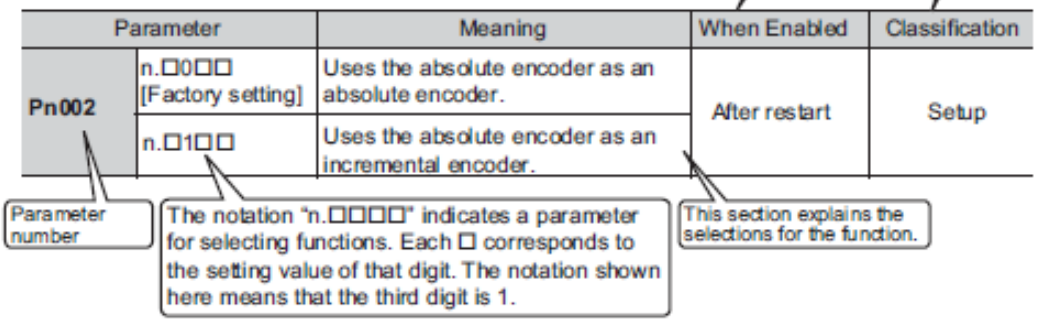

- Use the Sigma Win+

Select ΣV as an object series when you use Sigma Win+.
Refer to the table for the following type when you select the model (parameter edit at offline etc.).

Driver type	Driver select		Motor select	
	SMC	Sigma Win+	SMC	Sigma Win+
MECHATROLINK Ⅱ	LECYM2-**	SGDV-****11* Y572AA	V5	SGDV-R90A11B
			V7	SGDV-1R6A11B
			V8	SGDV-2R8A11B
			V9	SGDV-5R5A11A
MECHATROLINKⅢ	LECYU2-**	SGDV-****21* Y572AA	V5	SGDV-R90A21B
			V7	SGDV-1R6A21B
			V8	SGDV-2R8A21B
			V9	SGDV-5R5A21A

- Trademarks

MECHATROLINK is a trademark of the MECHATROLINK Members Association.

LECYU2-□□ Series / Driver Safety Instructions

These safety instructions are intended to prevent hazardous situations and/or equipment damage.
These instructions indicate the level of potential hazard with the labels of “Caution,” “Warning” or “Danger.”
They are all important notes for safety and must be followed in addition to International Standards (ISO/IEC), Japan Industrial Standards (JIS)*1) and other safety regulations*2).

*1) ISO 4414: Pneumatic fluid power -- General rules relating to systems
ISO 4413: Hydraulic fluid power -- General rules relating to systems
IEC 60204-1: Safety of machinery -- Electrical equipment of machines (Part 1: General requirements)
ISO 10218-1992: Manipulating industrial robots -- Safety
JIS B 8370: General rules for pneumatic equipment.
JIS B 8361: General rules for hydraulic equipment.
JIS B 9960-1: Safety of machinery – Electrical equipment for machines. (Part 1: General requirements)
JIS B 8433-1993: Manipulating industrial robots - Safety. etc.

*2) Labor Safety and Sanitation Law, etc.

Caution	**Caution** indicates a hazard with a low level of risk which, if not avoided, could result in minor or moderate injury.
Warning	**Warning** indicates a hazard with a medium level of risk which, if not avoided, could result in death or serious injury.
Danger	**Danger** indicates a hazard with a high level of risk which, if not avoided, will result in death or serious injury.
IMPORTANT	Indicates **important** information that should be memorized, as well as precautions, such as alarm displays, that do not involve potential damage to equipment.

⚠Warning

1. The compatibility of the product is the responsibility of the person who designs the equipment or decides its specifications.
Since the product specified here is used under various operating conditions, its compatibility with specific equipment must be decided by the person who designs the equipment or decides its specifications based on necessary analysis and test results.
The expected performance and safety assurance of the equipment will be the responsibility of the person who has determined its compatibility with the product.
This person should also continuously review all specifications of the product referring to its latest catalog information, with a view to giving due consideration to any possibility of equipment failure when configuring the equipment.

2. Only personnel with appropriate training should operate machinery and equipment.
The product specified here may become unsafe if handled incorrectly.
The assembly, operation and maintenance of machines or equipment including our products must be performed by an operator who is appropriately trained and experienced.

3. Do not service or attempt to remove product and machinery/equipment until safety is confirmed.
The inspection and maintenance of machinery/equipment should only be performed after measures to prevent falling or runaway of the driven objects have been confirmed.
When the product is to be removed, confirm that the safety measures as mentioned above are implemented and the power from any appropriate source is cut, and read and understand the specific product precautions of all relevant products carefully.
Before machinery/equipment is restarted, take measures to prevent unexpected operation and malfunction.

4. Contact SMC beforehand and take special consideration of safety measures if the product is to be used in any of the following conditions.
1) Conditions and environments outside of the given specifications, or use outdoors or in a place exposed to direct sunlight.

2) Installation on equipment in conjunction with atomic energy, railways, air navigation, space, shipping, vehicles, military, medical treatment, combustion and recreation, or equipment in contact with food and beverages, emergency stop circuits, clutch and brake circuits in press applications, safety equipment or other applications unsuitable for the standard specifications described in the product catalog.
3) An application which could have negative effects on people, property, or animals requiring special safety analysis.
4) Use in an interlock circuit, which requires the provision of double interlock for possible failure by using a mechanical protective function, and periodical checks to confirm proper operation.

Note that the ⚠CAUTION level may lead to a serious consequence according to conditions. Please follow the instructions of both levels because they are important to personnel safety.

What must not be done and what must be done are indicated by the following diagrammatic symbols.

⃠	**Prohibition**	Indicates what must not be done. For example, "No Fire" is indicated by
●	**Compulsion**	Indicates what must be done. For example, grounding is indicated by

In this Instruction Manual, instructions at a lower level than the above, instructions for other functions, and so on are classified into "POINT".

After reading this installation guide, always keep it accessible to the operator.

LECYU2-□□ Series / Driver
1. Safety Instructions

⚠Caution

The product is provided for use in manufacturing industries.
The product herein described is basically provided for peaceful use in manufacturing industries.
If considering using the product in other industries, consult SMC beforehand and exchange specifications or a contract if necessary.
If anything is unclear, contact your nearest sales branch.

Limited warranty and Disclaimer/Compliance Requirements

The product used is subject to the following “Limited warranty and Disclaimer” and “Compliance Requirements”.
Read and accept them before using the product.

Limited warranty and Disclaimer

The warranty period of the product is 1 year in service or 1.5 years after the product is delivered.*3) Also, the product may have specified durability, running distance or replacement parts. Please consult your nearest sales branch.

For any failure or damage reported within the warranty period which is clearly our responsibility, a replacement product or necessary parts will be provided.
This limited warranty applies only to our product independently, and not to any other damage incurred due to the failure of the product.

Prior to using SMC products, please read and understand the warranty terms and disclaimers noted in the specified catalog for the particular products.

***3) Vacuum pads are excluded from this 1 year warranty.**
A vacuum pad is a consumable part, so it is warranted for a year after it is delivered.
Also, even within the warranty period, the wear of a product due to the use of the vacuum pad or failure due to the deterioration of rubber material are not covered by the limited warranty.

Compliance Requirements

When the product is exported, strictly follow the laws required by the Ministry of Economy, Trade and Industry (Foreign Exchange and Foreign Trade Control Law).

This section describes important precautions that must be followed during storage, transportation, installation, wiring, operation, maintenance, inspection, and disposal. Be sure to always observe these precautions thoroughly.

⚠Warning

- Never touch any electric actuators during operation.
  Failure to observe this warning may result in injury.
- Before starting operation with a machine connected, make sure that an emergency stop can be applied at any time.
  Failure to observe this warning may result in injury or damage to the equipment.
- Never touch the inside of the driver.
  Failure to observe this warning may result in electric shock.
- Do not remove the cover of the power supply terminal block while the power is ON.
  Failure to observe this warning may result in electric shock.
- After the power is turned OFF or after a voltage resistance test, do not touch terminals while the CHARGE lamp is ON.
  Residual voltage may cause electric shock.
- Follow the procedures and instructions provided in the manuals for the products being used in the trial operation.
  Failure to do so may result not only in faulty operation and damage to equipment, but also in personal injury.
- The multiturn limit value need not be changed except for special applications.
  Changing it inappropriately or unintentionally can be dangerous.
- If the Multiturn Limit Disagreement alarm occurs, check the setting of parameter Pn205 in the DRIVER to be sure that it is correct.
  If Fn013 is executed when an incorrect value is set in Pn205, an incorrect value will be set in the encoder. The alarm will disappear even if an incorrect value is set, but incorrect positions will be detected, resulting in a dangerous situation where the machine will move to unexpected positions.
- Do not remove the top front cover, cables, connectors, or optional items from the DRIVER while the power is ON.
  Failure to observe this warning may result in electric shock.
- Do not damage, pull, exert excessive force on, or place heavy objects on the cables.
  Failure to observe this warning may result in electric shock, stopping operation of the product, or fire.
- Do not modify the product.
  Failure to observe this warning may result in injury, damage to the equipment, or fire.
- Provide appropriate brake devices on the machine side to ensure safety. The holding lock on a electric actuators with a lock is not a braking device for ensuring safety.
  Failure to observe this warning may result in injury.
- Do not come close to the machine immediately after resetting an instantaneous power interruption to avoid an unexpected restart. Take appropriate measures to ensure safety against an unexpected restart.
  Failure to observe this warning may result in injury.

- Connect the ground terminal according to local electrical codes (100 Ω or less for a DRIVER with a 100 V, 200 V power supply).
  Improper grounding may result in electric shock or fire.

- Installation, disassembly, or repair must be performed only by authorized personnel.
  Failure to observe this warning may result in electric shock or injury.
- The person who designs a system using the safety function (Hard Wire Baseblock function) must have full knowledge of the related safety standards and full understanding of the instructions in this manual. Failure to observe this warning may result in injury or damage to the equipment.

· Storage and Transportation

⚠Caution

- Do not store or install the product in the following locations.
  Failure to observe this caution may result in fire, electric shock, or damage to the equipment.
  - Locations subject to direct sunlight
  - Locations subject to temperatures outside the range specified in the storage/installation temperature conditions
  - Locations subject to humidity outside the range specified in the storage/installation humidity conditions
  - Locations subject to condensation as the result of extreme changes in temperature
  - Locations subject to corrosive or flammable gases
  - Locations subject to dust, salts, or iron dust
  - Locations subject to exposure to water, oil, or chemicals
  - Locations subject to shock or vibration
- Do not hold the product by the cables, motor while transporting it.
  Failure to observe this caution may result in injury or malfunction.
- Do not place any load exceeding the limit specified on the packing box.
  Failure to observe this caution may result in injury or malfunction.
- If disinfectants or insecticides must be used to treat packing materials such as wooden frames, pallets, or plywood, the packing materials must be treated before the product is packaged, and methods other than fumigation must be used.
  Example: Heat treatment, where materials are kiln-dried to a core temperature of 56°C for 30minutes or more.
  If the electronic products, which include stand-alone products and products installed in machines, are packed with fumigated wooden materials, the electrical components may be greatly damaged by the gases or fumes resulting from the fumigation process. In particular, disinfectants containing halogen, which includes chlorine, fluorine, bromine, or iodine can contribute to the erosion of the capacitors.

• Installation

⚠Caution

- Never use the product in an environment subject to water, corrosive gases, flammable gases, or combustibles.
  Failure to observe this caution may result in electric shock or fire.
- Do not step on or place a heavy object on the product.
  Failure to observe this caution may result in injury or malfunction.
- Do not cover the inlet or outlet ports and prevent any foreign objects from entering the product.
  Failure to observe this caution may cause internal elements to deteriorate resulting in malfunction or fire.
- Be sure to install the product in the correct direction.
  Failure to observe this caution may result in malfunction.
- Provide the specified clearances between the DRIVER and the control panel or with other devices.
  Failure to observe this caution may result in fire or malfunction.
- Do not apply any strong impact.
  Failure to observe this caution may result in malfunction.

- Wiring

⚠Caution

- Be sure to wire correctly and securely.
  Failure to observe this caution may result in electric actuators overrun, injury, or malfunction.
- Do not connect a commercial power supply to the U, V, or W terminals for the motor cable connection.
  Failure to observe this caution may result in injury or fire.
- Securely connect the main circuit terminals.
  Failure to observe this caution may result in fire.
- Do not bundle or run the main circuit cables together with the I/O signal cables or the encoder cables in the same duct. Keep the main circuit cables separated from the I/O signal cables and the encoder cables with a gap of at least 30 cm.
  Placing these cables too close to each other may result in malfunction.
- Use shielded twisted-pair cables or screened unshielded twisted-pair cables for I/O signal cables and the encoder cables.
- The maximum wiring length is 3 m for I/O signal cables, 50 m for encoder cables or servomotor main circuit cables.
- Do not touch the power supply terminals while the CHARGE lamp is ON after turning power OFF because high voltage may still remain in the DRIVER.
  Make sure the charge indicator is OFF first before starting to do wiring or inspections.
- Be sure to observe the following precautions when wiring the DRIVER main circuit terminal blocks.
  - Do not turn the DRIVER power ON until all wiring, including the main circuit terminal blocks, has been completed.
  - Remove detachable main circuit terminals from the DRIVER prior to wiring.
  - Insert only one power line per opening in the main circuit terminals.
  - Make sure that no part of the core wire comes into contact with (i.e., short-circuits) adjacent wires.
- Install a battery at either the host controller or the DRIVER, but not both.
  It is dangerous to install batteries at both ends simultaneously, because that sets up a loop circuit between the batteries.
- Always use the specified power supply voltage.
  An incorrect voltage may result in fire or malfunction.
- Make sure that the polarity is correct.
  Incorrect polarity may cause ruptures or damage.
- Take appropriate measures to ensure that the input power supply is supplied within the specified voltage fluctuation range. Be particularly careful in places where the power supply is unstable. An incorrect power supply may result in damage to the equipment.
- Install external breakers or other safety devices against short-circuiting in external wiring.
  Failure to observe this caution may result in fire.
- Take appropriate and sufficient countermeasures for each form of potential interference when installing systems in the following locations.
  - Locations subject to static electricity or other forms of noise
  - Locations subject to strong electromagnetic fields and magnetic fields
  - Locations subject to possible exposure to radioactivity
  - Locations close to power supplies

  Failure to observe this caution may result in damage to the equipment.
- Do not reverse the polarity of the battery when connecting it.
  Failure to observe this caution may damage the battery, the DRIVER or electric actuaters, or cause an explosion.
- Wiring or inspection must be performed by a technical expert.
- Use a 24-VDC power supply with double insulation or reinforced insulation.

- Operation

⚠Caution

- Always use the electric actuators and DRIVER in one of the specified combinations.
  Failure to observe this caution may result in fire or malfunction.
- During trial operation, confirm that the holding lock works correctly. Furthermore, secure system safety against problems such as signal line disconnection.
- Before starting operation with a machine connected, change the parameter settings to match the parameters of the machine.
  Starting operation without matching the proper settings may cause the machine to run out of control or malfunction.
- Do not turn the power ON and OFF more than necessary.
  Do not use the DRIVER for applications that require the power to turn ON and OFF frequently. Such applications will cause elements in the DRIVER to deteriorate.
  As a guideline, at least one hour should be allowed between the power being turned ON and OFF once actual operation has been started.
- When carrying out JOG operation (Fn002), origin search (Fn003), or EasyFFT (Fn206), forcing movable machine parts to stop does not work for forward overtravel or reverse overtravel. Take necessary precautions.
  Failure to observe this caution may result in damage to the equipment.
- When using the electric actuators for a vertical axis, install safety devices to prevent workpieces from falling due to alarms or overtravels. Set the servomotor so that it will stop in the zero clamp state when overtravel occurs.
  Failure to observe this caution may cause workpieces to fall due to overtravel.
- When not using the turning-less function, set the correct moment of inertia ratio (Pn103).
  Setting an incorrect moment of inertia ratio may cause machine vibration.
- Do not touch the DRIVER heat sinks, regenerative option, or servomotor while power is ON or soon after the power is turned OFF.
  Failure to observe this caution may result in burns due to high temperatures.
- Do not make any extreme adjustments or setting changes of parameters.
  Failure to observe this caution may result in injury or damage to the equipment due to unstable operation.
- When an alarm occurs, remove the cause, reset the alarm after confirming safety, and then resume operation.
  Failure to observe this caution may result in damage to the equipment, fire, or injury.
- Do not use the holding lock of the electric actuators for braking.
  Failure to observe this caution may result in malfunction.
- An alarm or warning may occur if communications are performed with the host controller while the SigmaWin+ is operating. If an alarm or warning occurs, it may stop the current process and stop the system.

- Maintenance and Inspection

⚠Caution

- Do not disassemble the DRIVER and the servomotor.
  Failure to observe this caution may result in electric shock or injury.
- Do not attempt to change wiring while the power is ON.
  Failure to observe this caution may result in electric shock or injury.
- When replacing the DRIVER, resume operation only after copying the previous DRIVER parameters to the new DRIVER.
  Failure to observe this caution may result in damage to the equipment.

- Disposal

⚠Caution
· When disposing of the products, treat them as ordinary industrial waste.

- General Precautions

⚠Caution
• The products shown in illustrations in this manual are sometimes shown without covers or protective guards. Always replace the cover or protective guard as specified first, and then operate the products in accordance with the manual. The drawings presented in this manual are typical examples and may not match the product you received.

Harmonized Standards

- European Directives

	Model	European Directives	Harmonized Standards
DRIVER	LECY□□-V□ (SGDV)	Machinery Directive 2006/42/EC	EN ISO13849-1: 2008 EN 954-1
		EMC Directive 2004/108/EC	EN 55011 /A2 group 1, class A EN 61000-6-2 EN 61800-3
		Low Voltage Directive 2006/95/EC	EN 50178 EN 61800-5-1
Servomotor	LE-V□-□ (SGMJV)	EMC Directive 2004/108/EC	EN 55011 /A2 group 1, class A EN 61000-6-2 EN 61800-3
		Low Voltage Directive 2006/95/EC	EN 60034-1 EN 60034-5

- Safety Standards

	Model	Safety Standards	Standards
DRIVER	LECY□□-V□ (SGDV)	Safety of Machinery	EN ISO13849-1: 2008 EN 954-1 IEC 60204-1
		Functional Safety	IEC 61508 series IEC 62061 IEC 61800-5-2
		EMC	IEC 61326-3-1

- Safe Performance

Items	Standards	Performance Level
Safety Integrity Level	IEC 61508	SIL2
	IEC 62061	SILCL2
Probability of Dangerous Failure per Hour	IEC 61508 IEC 62061	PFH $\Leftarrow 1.7\times10^{-9}$ [1/h] (0.17% of SIL2)
Category	EN 954-1	Category 3
Performance Level	EN ISO 13849-1	PL d (Category 3)
Mean Time to Dangerous Failure of Each Channel	EN ISO 13849-1	MTTFd: High
Average Diagnostic Coverage	EN ISO 13849-1	DCave: Low
Stop Category	IEC 60204-1	Stop category 0
Safety Function	IEC 61800-5-2	STO
Proof test Interval	IEC 61508	10 years

Contents

1. Outline

1.1 LECY Series DRIVERs

The LECY Series DRIVERs are designed for applications that require frequent high-speed, high-precision positioning. The DRIVER makes the most of machine performance in the shortest time possible, thus contributing to improving productivity.

1.2 Part Names

This section describes the part names of LECYU DRIVER for MECHATROLINK-III communications reference.

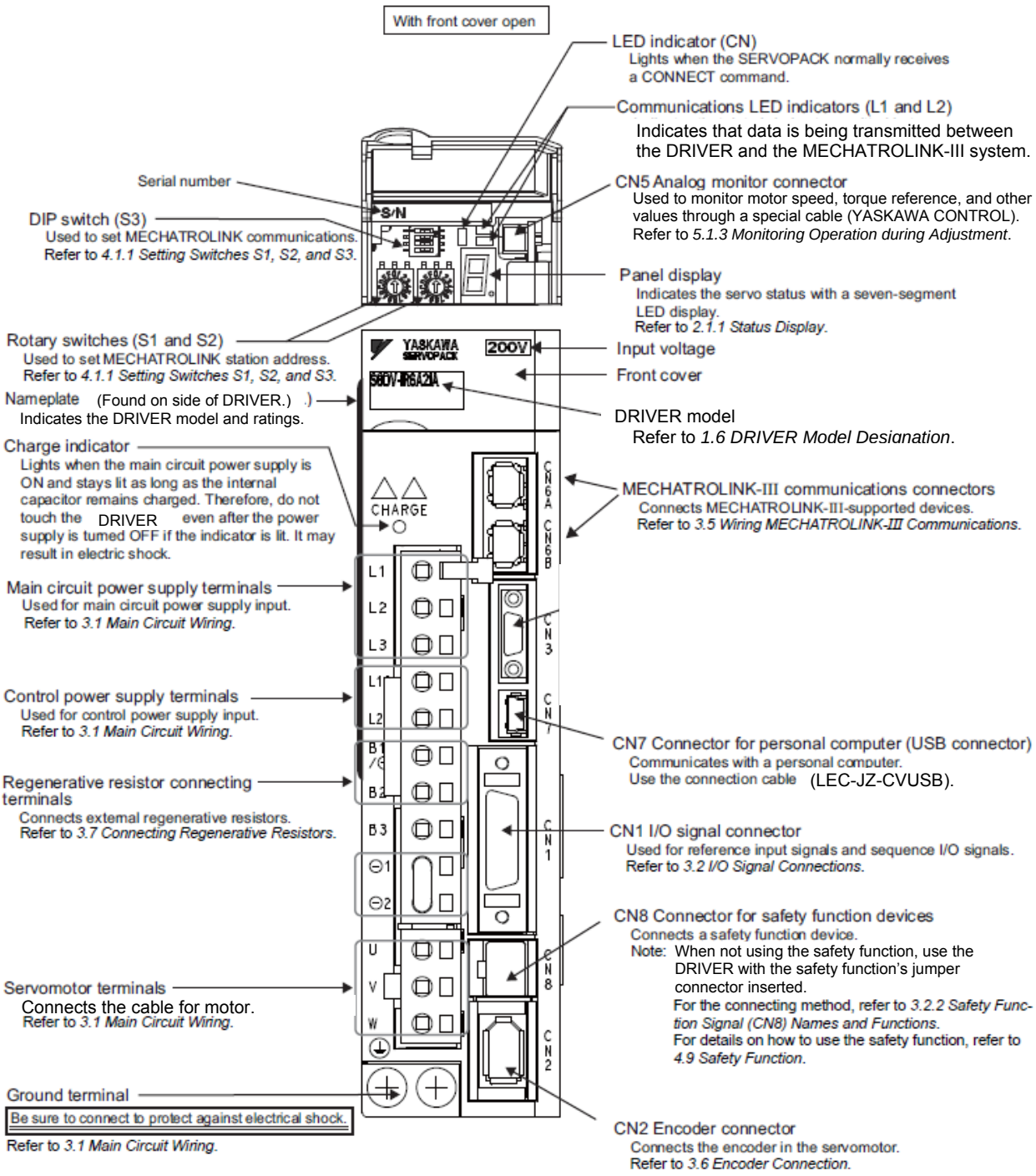

1.3 DRIVER Ratings and Specifications

This section describes the ratings and specifications of DRIVERs.

1.3.1 Ratings

Ratings of DRIVERs are as shown below.

LECYU (Three Phase, 200 V)	V5	V7	V8	V9
Continuous Output Current [Arms]	0.91	1.6	2.8	5.5
Instantaneous Max. Output Current [Arms]	2.9	5.8	9.3	16.9
Regenerative Resistor *	None or external			Built-in or external
Main Circuit Power Supply	Three-phase, 200 to 230 VAC,–15% to +10% 50/60 Hz			
Control Power Supply	Single-phase, 200 to 230 VAC,–15% to +10% 50/60 Hz			
Overvoltage Category	III			

∗ Refer to *3.7 Connecting Regenerative resistors* for details.

1.3.2 Basic Specifications

Basic specifications of DRIVERs are shown below.

Drive Method			Sine-wave current drive with PWM control of IGBT	
Feedback			Encoder: 20-bit (absolute)	
Operating Conditions	Surrounding Air Temperature		0˚C to +55˚C	
	Storage Temperature		-20˚C to +85˚C	
	Ambient Humidity		90% RH or less	With no freezing or condensation
	Storage Humidity		90% RH or less	
	Vibration Resistance		4.9 m/s^2	
	Shock Resistance		19.6 m/s^2	
	Protection Class		IP10	An environment that satisfies the following conditions. • Free of corrosive or flammable gases • Free of exposure to water, oil, or chemicals • Free of dust, salts, or iron dust
	Pollution Degree		2	
	Altitude		1000 m or less	
	Others		Free of static electricity, strong electromagnetic fields, magnetic fields or exposure to radioactivity	
Harmonized Standards			EN50178, EN55011/A2 group1 classA, EN61000-6-2, EN61800-3, EN61800-5-1, EN954-1, IEC61508-1 to 4	
Mounting			Base-mounted	
Performance	Speed Control Range		1:5000 (The lower limit of the speed control range must be lower than the point at which the rated torque does not cause the servomotor to stop.)	
	Speed Regulation*1	Load Regulation	0% to 100% load: ±0.01% max. (at rated speed)	
		Voltage Regulation	Rated voltage ±10%: 0% (at rated speed)	
		Temperature Regulation	25 ± 25 ˚C: ±0.1% max. (at rated speed)	
	Torque Control Tolerance (Repeatability)		±1%	
	Soft Start Time Setting		0 to 10 s (Can be set individually for acceleration and deceleration.)	

(cont'd)

I/O Signals	Encoder Output Pulse		Phase A, B, C: line driver Encoder output pulse: any setting ratio (Refer to *4.4.5*.)	
	Sequence Input	Input Signals which can be allocated	Number of Channels	7 ch
			Functions	• Homing deceleration switch (/DEC) • External latch (/EXT 1 to 3) • Forward run prohibited (P-OT), reverse run prohibited (N-OT) • Forward external torque limit (/P-CL), reverse external torque limit (/N-CL) Signal allocations can be performed, and positive and negative logic can be changed.
	Sequence Output	Fixed Output	Servo alarm (ALM) output	
		Output Signals which can be allocated	Number of Channels	3 ch
			Functions	• Positioning completion (/COIN) • Speed coincidence detection (/V-CMP) • Rotation detection (/TGON) • Servo ready (/S-RDY) • Torque limit detection (/CLT) • Speed limit detection (/VLT) • Brake (/BK) • Warning (/WARN) • Near (/NEAR) Signal allocations can be performed, and positive and negative logic can be changed.
Communi - cations Function	RS422A Commu-nications (CN3)	Interface	personal computer (can be connected with SigmaWin+)	
		1:N Communica-tions	N = Up to 15 stations possible at RS422A	
		Axis Address Setting	Set by parameter	
	USB Commu-nications (CN7)	Interface	Personal computer (can be connected with SigmaWin+)	
		Communica-tions Standard	Complies with standard USB1.1. (12 Mbps)	
LED Display			Panel display (seven-segment), CHARGE, L1, L2, and CN indicators	
MECHATROLINK-III Communications Setting Switches			Rotary Switch (S1 and S2)	Position: 16 positions × 2 (Refer to *4.1.1*)
			DIP Switch (S3)	Number of pins: Four pins (Refer to *4.1.1*)
Analog Monitor (CN5)			Number of points: 2 Output voltage: ± 10VDC (linearity effective range ± 8 V) Resolution: 16 bits Accuracy: ± 20 mV (Typ) Max. output current: ± 10 mA Settling time (± 1%): 1.2 ms (Typ)	
Dynamic Brake (DB)			Activated when a servo alarm or overtravelling occurs or when the power supply for the main circuit or servomotor is OFF.	
Regenerative Processing			Included *2	
Overtravel Prevention (OT)			Dynamic brake stop, deceleration to a stop, or free run to a stop at P-OT or N-OT	
Protective Function			Overcurrent, overvoltage, insufficient voltage, overload, regeneration error, and so on.	

(cont'd)

Utility Function		Gain adjustment, alarm history, JOG operation, origin search, and so on.
Safety Function	Input	/HWBB1, /HWBB2: Baseblock signal for power module
	Output	EDM1: Monitoring status of internal safety circuit (fixed output)
	Standards *3	EN954 Category 3, IEC61508 SIL2

∗1. Speed regulation by load regulation is defined as follows:

$$\text{Speed regulation} = \frac{\text{No-load motor speed} - \text{Total load motor speed}}{\text{Rated motor speed}} \times 100\%$$

∗2. Refer to *1.3.1 Ratings* for details on regenerative resistors.

∗3. Perform risk assessment for the system and be sure that the safety requirements are fulfilled.

1.3.3 MECHATROLINK-III Function Specifications

The following table shows the specifications of MECHATROLINK-III.

Function		Specifications
MECHATROLINK-III Communication	Communication Protocol	MECHATROLINK-III
	Station Address	03H to EFH (Max. number of stations: 62) Use the rotary switches S1 and S2 to set the station address.
	Baud Rate	100 Mpbs
	Transmission Cycle	125 μs, 250 μs, 500 μs, 750 μs, and 1.0 ms to 4.0 ms (increments of 0.5 ms)
	Number of Transmission Bytes	16, 32, or 48 bytes per station Use the DIP switch S3 to select the number of words.
Reference Method	Control Method	Position, speed, or torque control with MECHATROLINK-II communication
	Reference Input	MECHATROLINK-I, MECHATROLINK-II commands (sequence, motion, data setting/reference, monitoring, or adjustment)
	Profile	MECHATROLINK-III standard servo profile MECHATROLINK-II-compatible profile

1.4 DRIVER Internal Block Diagrams

1.4.1 Three-phase 200 V, LECYU2-V5, LECYU2-V7 Models

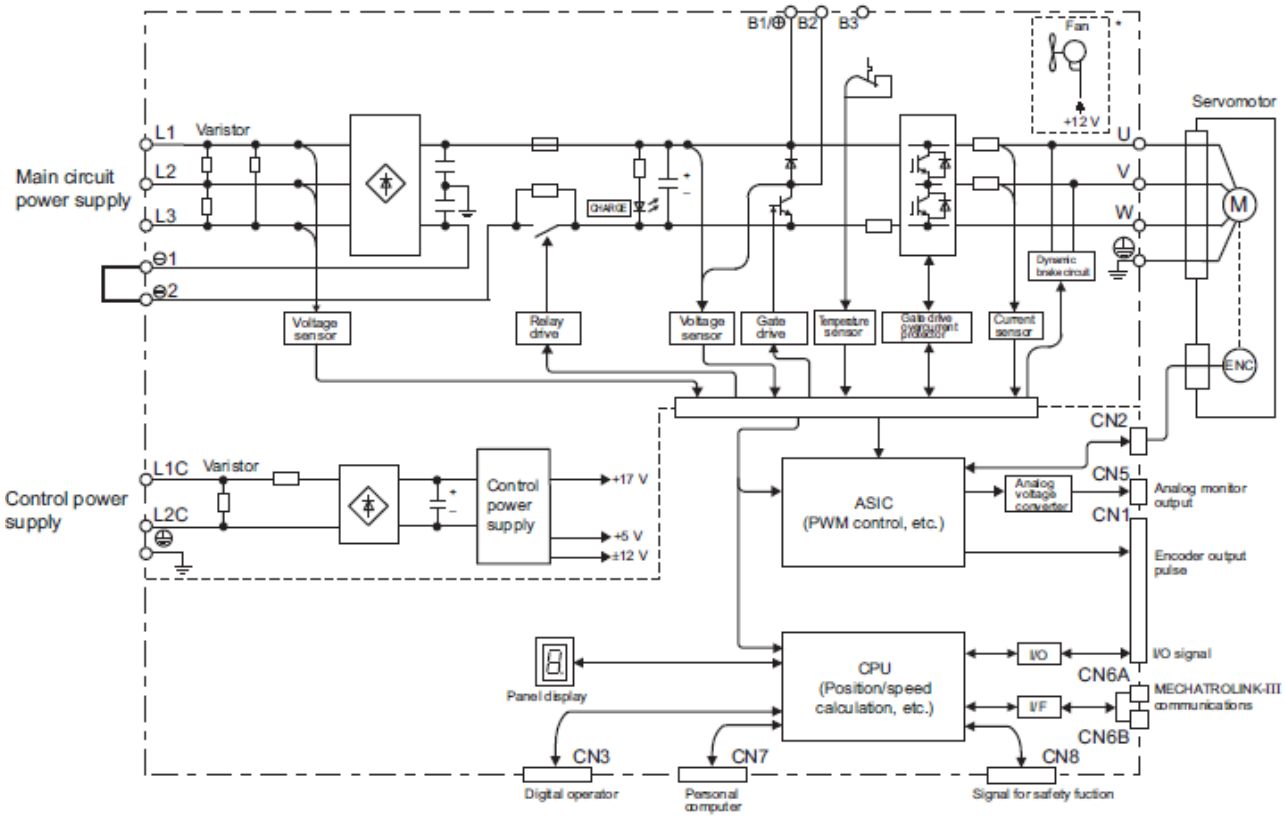

1.4.2 Three-phase 200 V, LECYU2-V8 Model

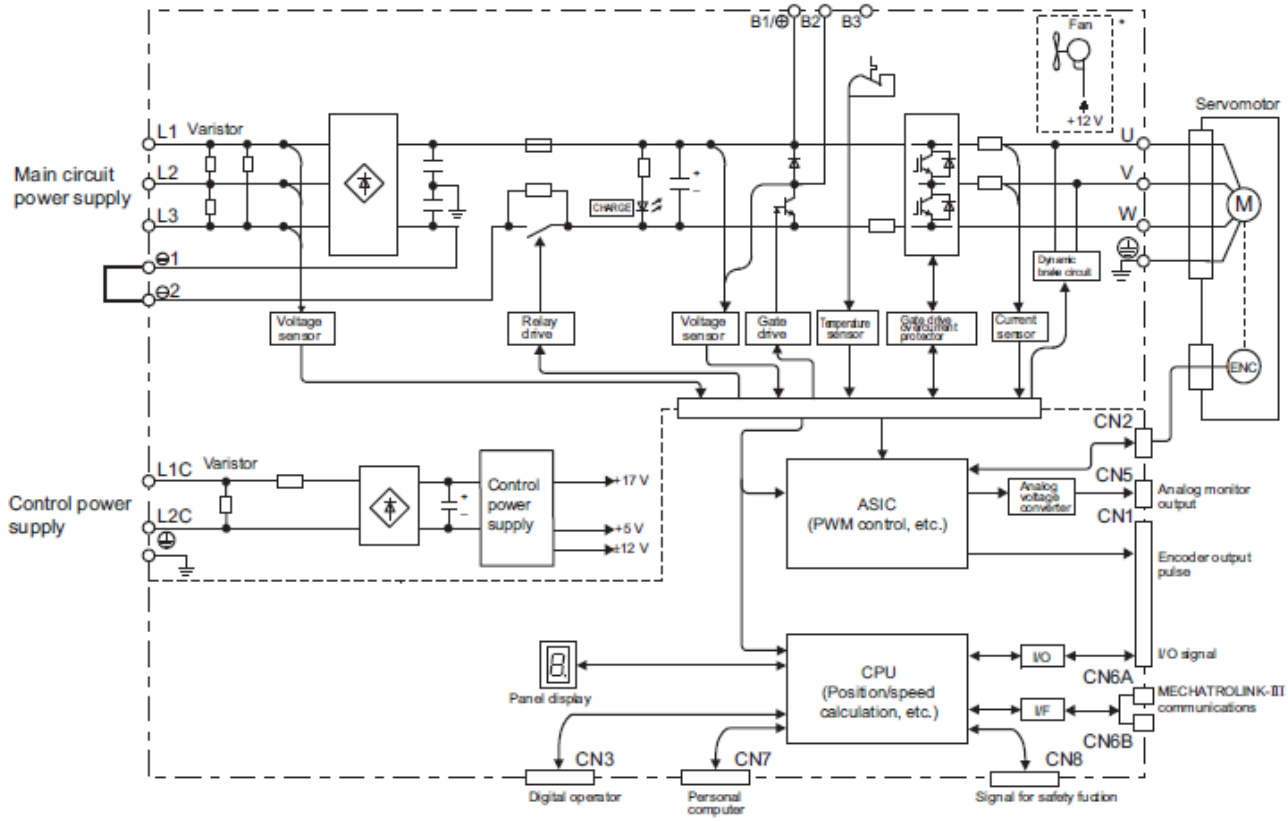

1.4.3 Three-phase 200 V, LECYU2-V9 Models

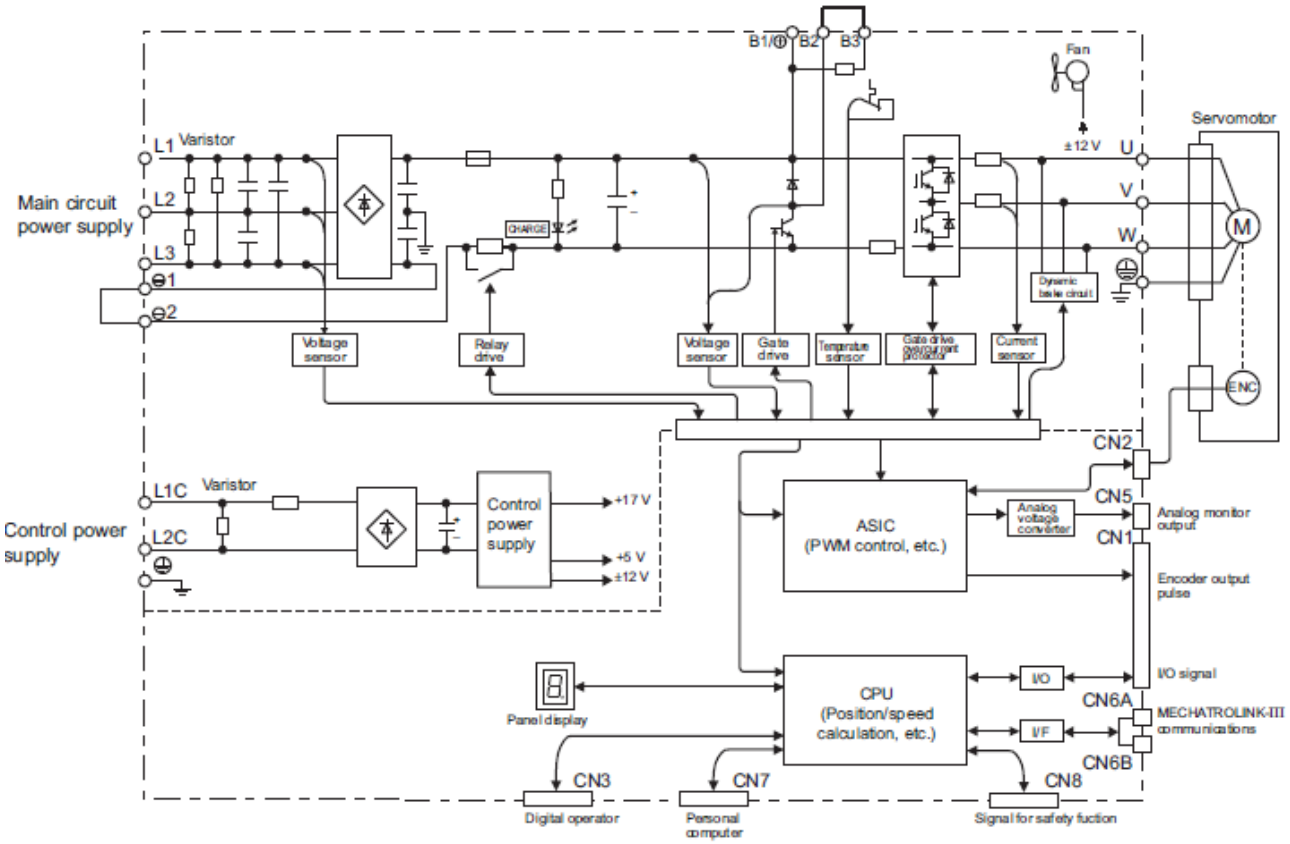

1.5 Examples of Servo System Configurations

This section describes examples of basic servo system configuration.

1.5.1 Connecting to LECYU2-V□ DRIVER

(1) Using a Three-phase, 200-V Power Supply

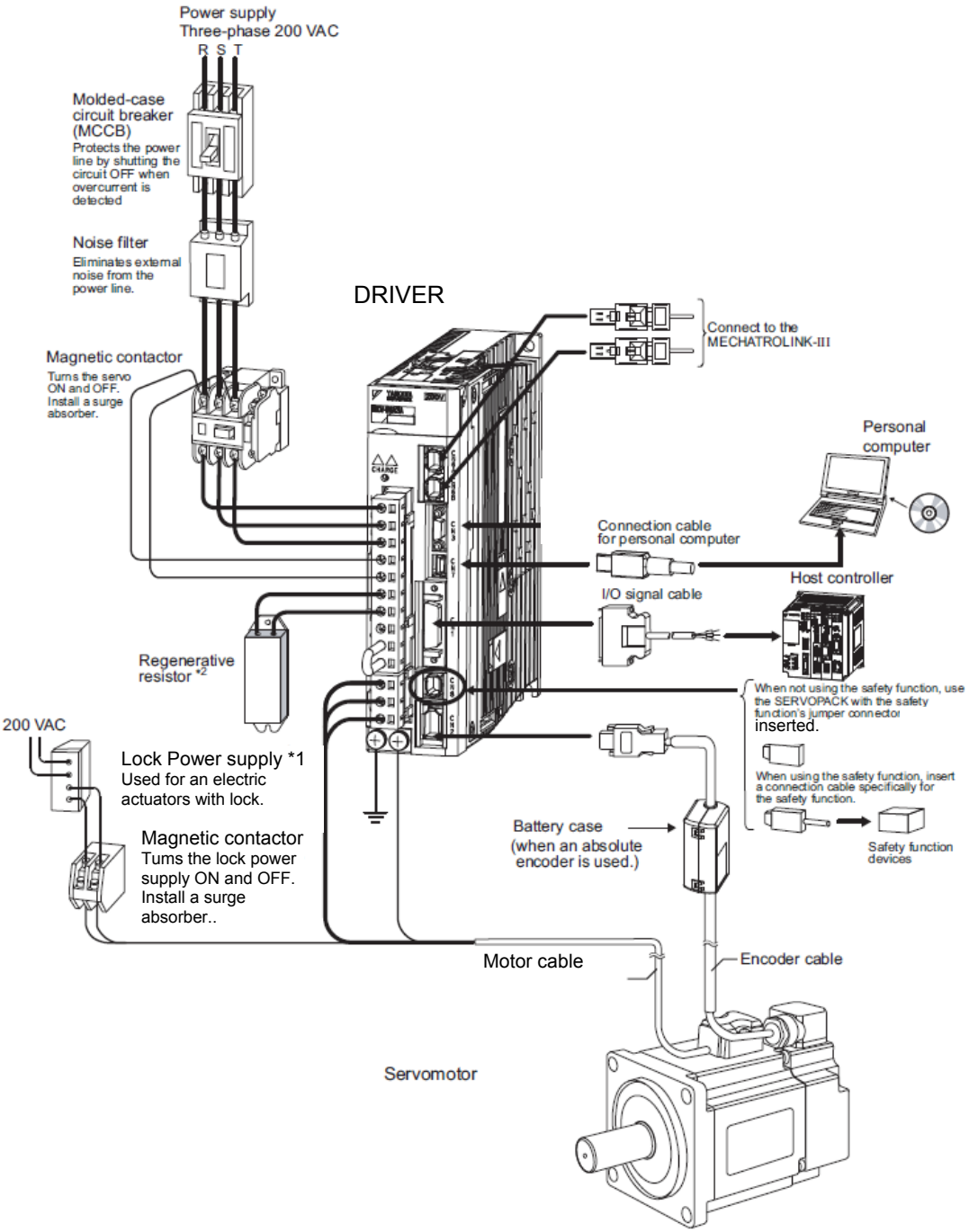

∗1. Use a 24-VDC power supply. (Not included.)

∗2. Before connecting an external regenerative resistors to the DRIVER, refer to *3.7 Connecting Regenerative Resistors*.

(2) Using a Single-phase, 200-V Power Supply

The LECY Series 200 V DRIVER generally specifies a three-phase power input but some models can be used with a single-phase 200 V power supply. Refer to *3.1.3 Using the DRIVER with Single-phase, 200 V Power Input* for details.

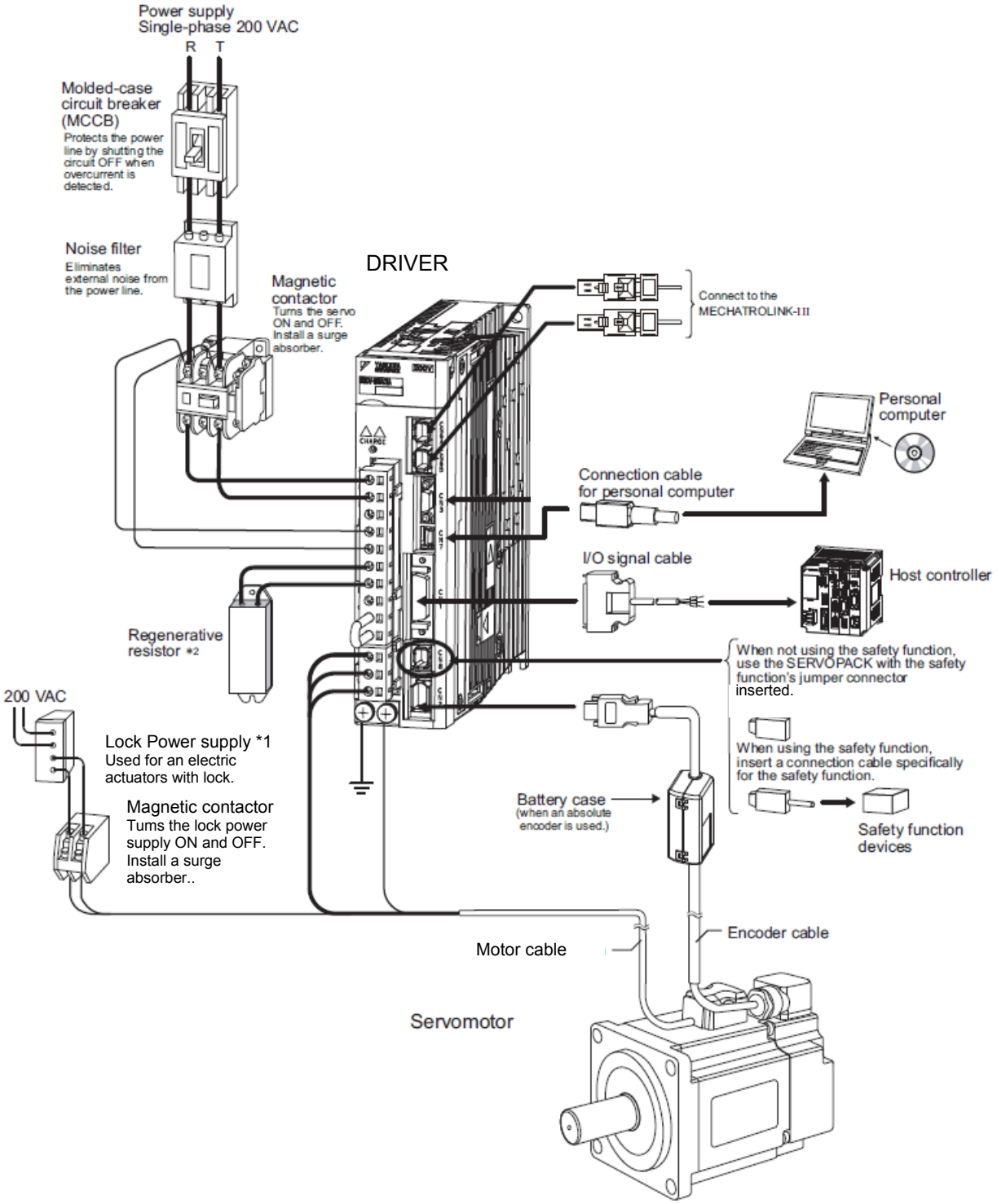

∗1. Use a 24-VDC power supply. (Not included.)

∗2. Before connecting an external regenerative option to the DRIVER, refer to *3.7 Connecting Regenerative Resistors*.

1.6 DRIVER Model Designation

This section shows DRIVER model designation.

LECY U 2 — V5

Compatible motor type

	Type	Capacity	Encoder
V5	AC servo motor (V6)	100W	Absolute
V7	AC servo motor (V7)	200W	
V8	AC servo motor (V8)	400W	
V9 *1	AC servo motor (V9)	750W	

Driver type

M	MECHATROLINK-Ⅲ type (For absolute encoder)

Power supply voltage

2 *2	200 to 230 VAC, 50/60Hz

*1. The lineup is done the standard item.
*2. These amplifiers can be powered with single or three-phase.
*If the I/O connector (CN1) is required, please order product code "LE-CYNA". (The I/O connector is not included)

1.7 Inspection and Maintenance

This section describes the inspection and maintenance of DRIVER.

(1) DRIVER Inspection

For inspection and maintenance of the DRIVER, follow the inspection procedures in the following table at least once every year. Other routine inspections are not required.

Item	Frequency	Procedure	Comments
Exterior	At least once a year	Check for dust, dirt, and oil on the surfaces.	Clean with compressed air.
Loose Screws		Check for loose terminal block and connector screws.	Tighten any loose screws.

(2) DRIVER's Parts Replacement Schedule

The following electric or electronic parts are subject to mechanical wear or deterioration over time. To avoid failure, replace these parts at the frequency indicated.

Refer to the standard replacement period in the following table and contact your Yaskawa representative. After an examination of the part in question, we will determine whether the parts should be replaced or not.

IMPORTANT

The parameters of any DRIVERs overhauled by SMC are reset to the factory settings before shipping. Be sure to confirm that the parameters are properly set before starting operation.

Part	Standard Replacement Period	Operating Conditions
Cooling Fan	4 to 5 years	• Surrounding Air Temperature: Annual average of 30°C • Load Factor: 80% max. • Operation Rate: 20 hours/day max.
Smoothing Capacitor	7 to 8 years	
Other Aluminum Electrolytic Capacitor	5 years	
Relays	–	
Fuses	10 years	
Battery	3 years*	

* It is a standard value in the state of no energizing (state not to turn on power to the driver).
The lifetime changes by condition and environment.

1.8 Installation Environment and Applicable Standards

1.8.1 DRIVER Installation Environment

- Surrounding air temperature: 0 to 55°C
- Ambient humidity: 90% RH or less (with no condensation)
- Altitude: 1,000 m or less
- Vibration resistance: 4.9 m/s^2
- Shock resistance: 19.6 m/s^2

- Installation Precautions
  - Mounting in a Control Panel

    To prevent the temperature around the DRIVER from exceeding 55°C, take into account the size of the control panel, the layout of the DRIVER, and the cooling method. For details, refer to 1.9 DRIVER Installation.

  - Mounting Near a Heating Unit

    To prevent the temperature around the DRIVER from exceeding 55°C, suppress radiant heat from the heating unit and temperature rise due to convection.

  - Mounting Near a Vibration Source

    To prevent vibration from being transmitted to the DRIVER, install a vibration isolator underneath the DRIVER.

  - Mounting to a Location Exposed to Corrosive Gas

    Take measures to prevent exposure to corrosive gas. Corrosive gases will not immediately affect the DRIVER, but will eventually cause electronic components and contactor-related devices to malfunction.

  - Other Locations

    Do not mount the DRIVER in locations subject to high temperatures, high humidity, dripping water, cutting oil, dust, iron filings, or radiation.

    <Note>
    When storing the DRIVER with the power OFF, store it in an environment with the following temperature and humidity:
    • -20 to +85°C, 90% RH or less. (with no condensation)

1.8.2 Installation Conditions for Applicable Standards

Applicable Standards	EN50178, EN55011/A2 group1 classA, EN61000-6-2, EN61800-3, EN61800-5-1, EN954-1, IEC61508-1 to 4
Operating Conditions	Overvoltage Category: III Pollution degree: 2 Protection class: IP10
Installation Conditions	Low Voltage Directive: Satisfy the conditions outlined in *1.8.3 Conditions Corresponding to Low Voltage Directive* of this manual. EMC Directive: Certification is required after installation in the user's machine under the conditions outlined in *3.8.3 EMC Installation Conditions* of this manual.

1.8.3 Conditions Corresponding to Low Voltage Directive

To adapt DRIVERs to the Low Voltage Directive, make sure that the following environmental conditions are met.

- Installation category: III
- Pollution degree: 2
- Protection class: 10
- Altitude: 1000 m max.

Be sure to install a fuse for the main circuit power-supply as well as meeting these environmental conditions. To choose the fuse capacity, refer to *3.1.2 Using a Standard Power Supply (Three-phase 200 V)*.

1.9 DRIVER Installation

1.9.1 Orientation

Mount the DRIVER with a vertical orientation.
Firmly secure the DRIVER to the mounting surface, using either two or four mounting holes depending on the DRIVER capacity.

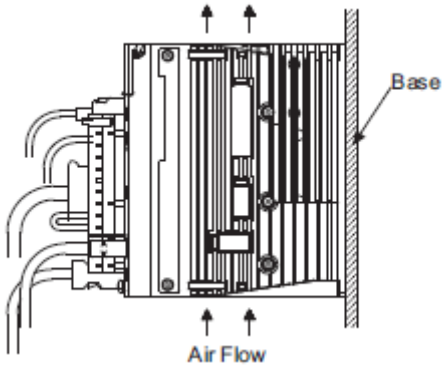

1.9.2 Installation Standards

Observe the standards for mounting DRIVERs in control panels, including those for the mounting DRIVERs side by side in one control panel as shown in the following illustration.

• DRIVER Mounting Orientation

Mount the DRIVER vertically to the wall, with the front panel (the side with the panel operator display) facing out.

• Cooling

Refer to the following diagram and leave sufficient space for cooling by fans and natural convection.

• Mounting DRIVERs Side by Side in a Control Panel

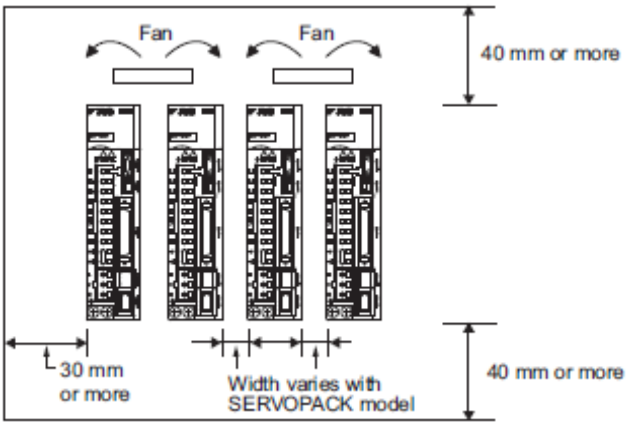

Leave sufficient space on each side and at the top and the bottom of each DRIVER.
The width on each side varies in accordance with the models of the DRIVERS used.

DRIVER Model LECY□2-	Side		Top and bottom
	Left	Right	
V5, V7, V8	1 mm or more		40 mm or more
V9	1 mm or more	10 mm or more	

Also install cooling fans above the DRIVERs to disperse local pockets of warmer air around the DRIVERs.

• Inside the Control Panel

The conditions inside the control panel should be the same as the environmental conditions of the DRIVER. Refer to *1.8.1 DRIVER Installation Environment*.

The DRIVERs have an Installation Environment monitor. With this monitor, operation conditions in the nstallation environment can be observed and measured.

The value shown on this monitor should be equal to or less than 100% for optimum operating conditions. If this value is over 100%, one of the following measures must be taken to ensure safe operation and a long product life.

• Improve air circulation around DRIVERs.

Minimum Air Circulation Rate

Top (10 mm): 0.5 m/s

Bottom (10 mm): 0.2 m/s

To improve the air circulation to meet these minimum standards and to lower the percentage shown on the monitor, widen the space between the DRIVERs or lower the temperature of the surrounding air.

<Note>

For every increase of 10°C, the percentage shown on the monitor will also increase by approximately ten.

2. Panel Display and Operation of SigmaWin+

2.1 Panel Display

The servo status can be checked on the panel display of the DRIVER. Also, if an alarm or warning occurs, its alarm or warning number is displayed.

2.1.1 Status Display

The display shows the following status.

Display	Meaning
	Rotation Detection (/TGON) Lights if motor speed exceeds the value set in Pn502. (Factory setting: 20 min^{-1})
	Baseblock Lights for baseblock (Servomotor power OFF).
	Reference Input Lights when a reference is being input.
	CONNECT Lights during connection.

2.1.2 Alarm and Warning Display

If an alarm or warning occurs, the display will change in the following order.

Example: Alarm A.E60

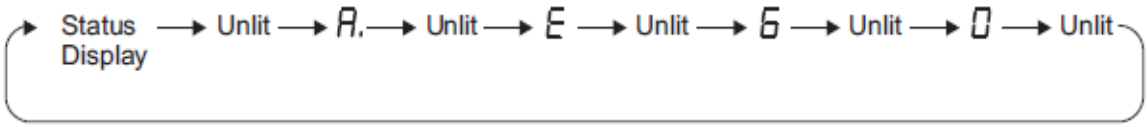

"6" of the figure, "b" of the alphabet, and "d" are displayed as follows.

6→  b→  d→ 

2.1.3 Hard Wire Base Block Display

If a hard wire base block (HWBB) occurs, the display will change in the following order.

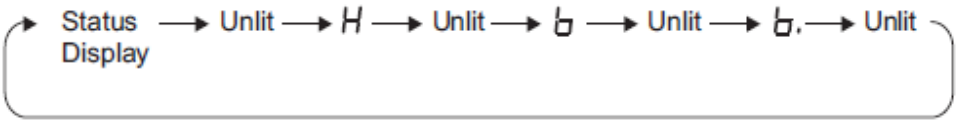

2.1.4 Overtravel Display

If overtravelling occurs, the display will change in the following order.

① Overtravel at forward rotation (P-OT)

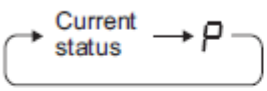

② Overtravel at reverse rotation (N-OT)

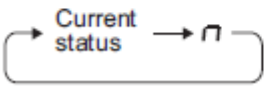

③ Overtravel at forward/reverse rotation

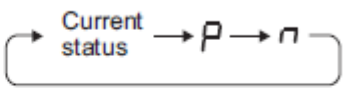

2.2 Operation of SigmaWin+ TM

SigmaWin+ is a setup software for setup and optimum DRIVER tuning of LECY series.
Please download the install program from our home page.

SigmaWin+TM is the registered trademarks of YASKAWA ELECTRIC Corporation.

2.2.1 Compatible Devices

- LECYM series
- LECYU series

2.2.2 Hardware requirements

When using setup software (SigmaWin+TM), use a DOS/V PC/AT compatible PC that meets the following operating conditions.

Equipment		Description
PC *1 *2 *3 *4	OS	・Windows® XP *5 ・Windows® Vista ・Windows® 7 (32 bit/ 64 bit)
	Hard Disk	350 MB or more of free space (When the software is installed, 400MB or more is empty recommended.)
	Communication interface	Use USB port
Display		XVGA monitor (1024×768 or more, “The small font is used.”) 256 color or more (65536 color or more is recommended) Connectable with the above personal computer.
Keyboard		Connectable with the above personal computer.
Mouse		Connectable with the above personal computer.
Printer		Connectable with the above personal computer.
USB cable		LEC-JZ-CVUSB *6
Other		Adobe Reader Ver.5.0 or more (∗Ver.6.0 is excluded.)

*1. Windows, Windows Vista and Windows 7 are the registered trademarks of Microsoft Corporation in the United States and other countries.
*2. On some personal computers, SigmaWin+ may not run properly.
*3. 64-bit Windows® XP and 64-bit Windows® Vista are not supported.
*4. Use Windows® XP: Please use it by the administrator authority (When installing and using it.).
*5. In PC that uses the program to correct the problem of HotfixQ328310, it is likely to fail in the installation. In that case, please use the program to correct the problem of HotfixQ329623.
*6. Order USB cable separately.

2.2.3 Installing SigmaWin+ Program

To install SigmaWin+, run the setup file for SigmaWin+. And the installation process will begin. In this process, SigmaWin+ and the related files will be installed, or stored on the hard disk.
Operating conflicts may arise with the other programs during installation. Be sure to close all other programs before installing SigmaWin+.
Install the program using the following procedure.

1. Please download the install program from our home page.

2. "SETUP.EXE" of the file is double-clicked.

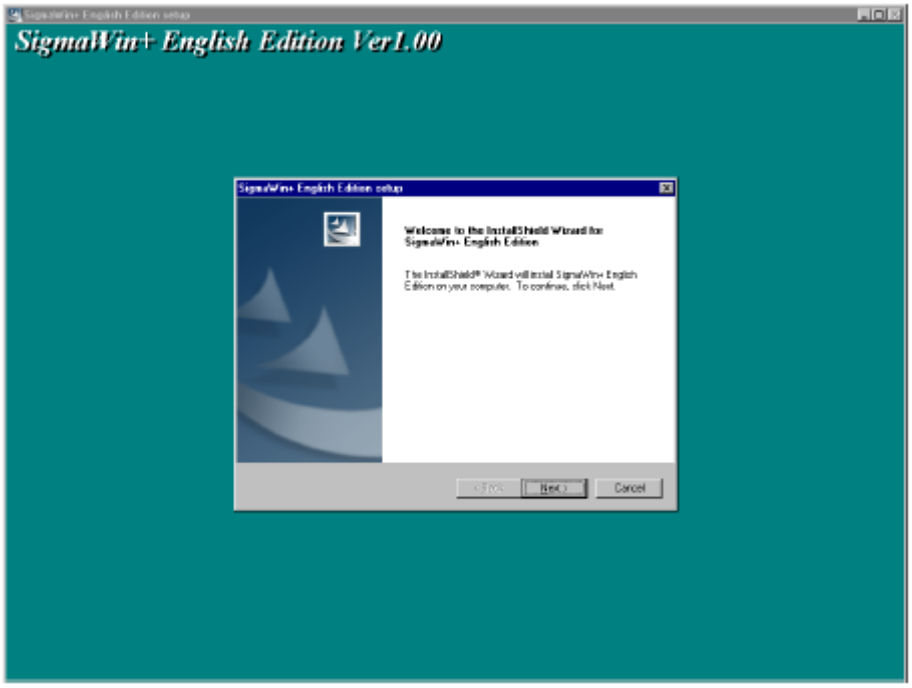

A message will appear, welcoming you to the SigmaWin+ program.

3. Click Next to continue.s

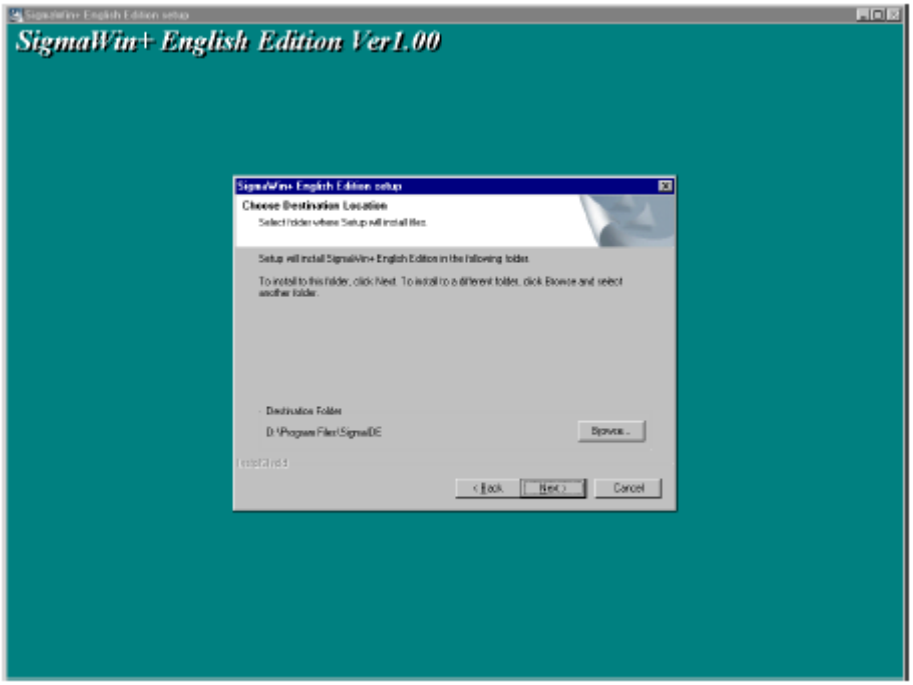

4. Follow the onscreen instructions to choose a destination folder to copy the SigmaWin+ file to, and click Next to continue.

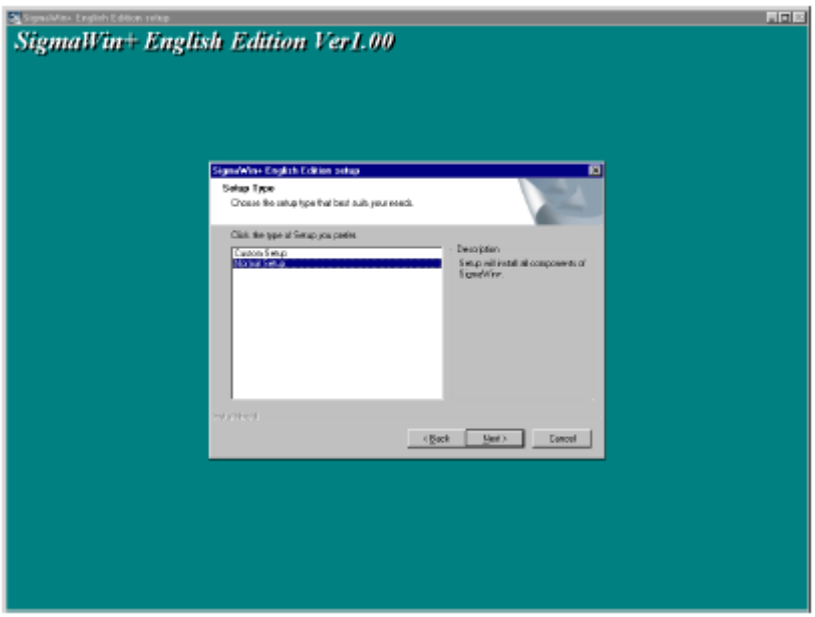

5. Select the setup type. Choose "Normal Setup" and click **Next**.

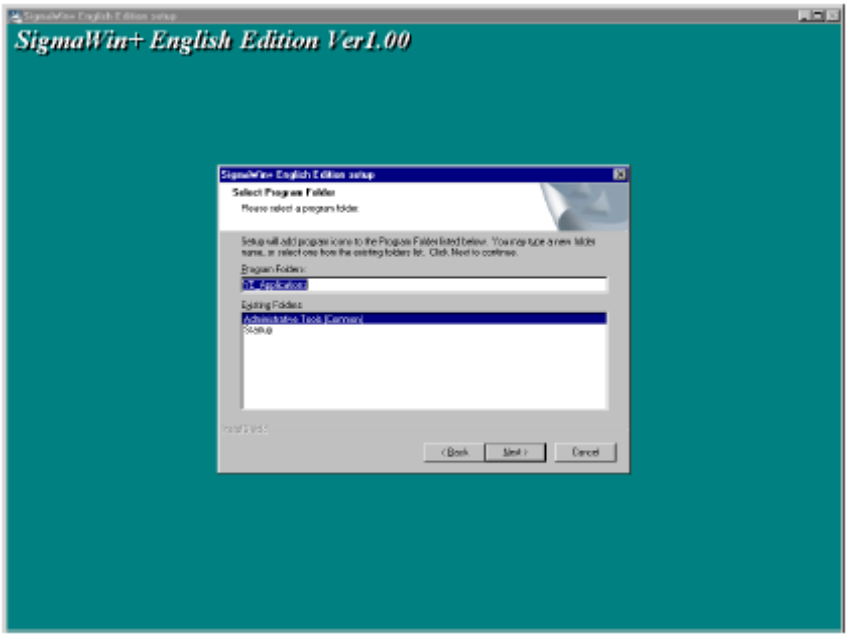

6. Select the program group to create the SigmaWin+ icon. "YE_Applications" is the default setting. After selecting the program group or folder, click **Next** to continue.

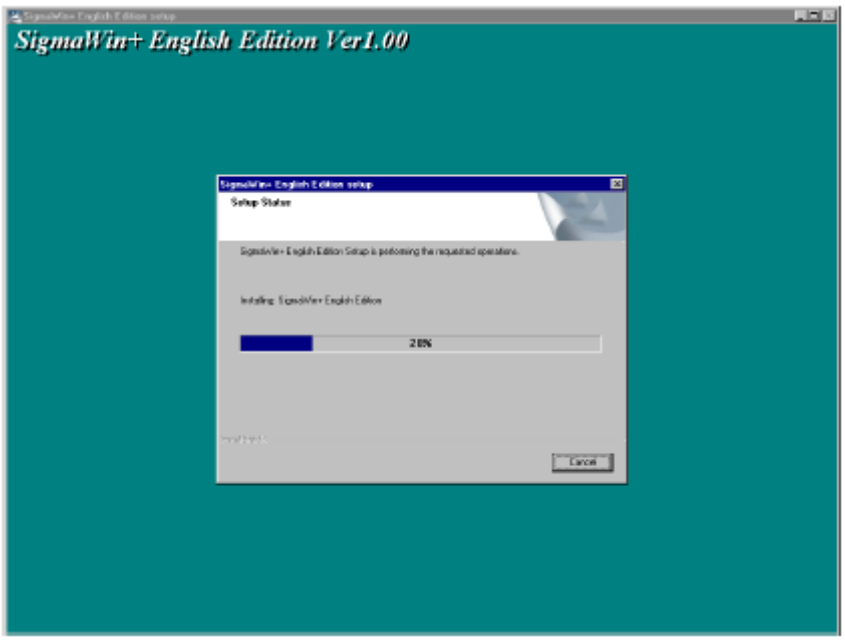

Then the PC files are copied. The percentage of the copying that has been completed is shown.

Note: If new versions of the PC support files are needed to install SigmaWin+, a window will appear asking whether to overwrite the current version or to cancel the installation. SigmaWin+ may not run correctly if the new versions of the support files are not installed.

If SigmaWin+ has been successfully installed, one of two dialog boxes is displayed.

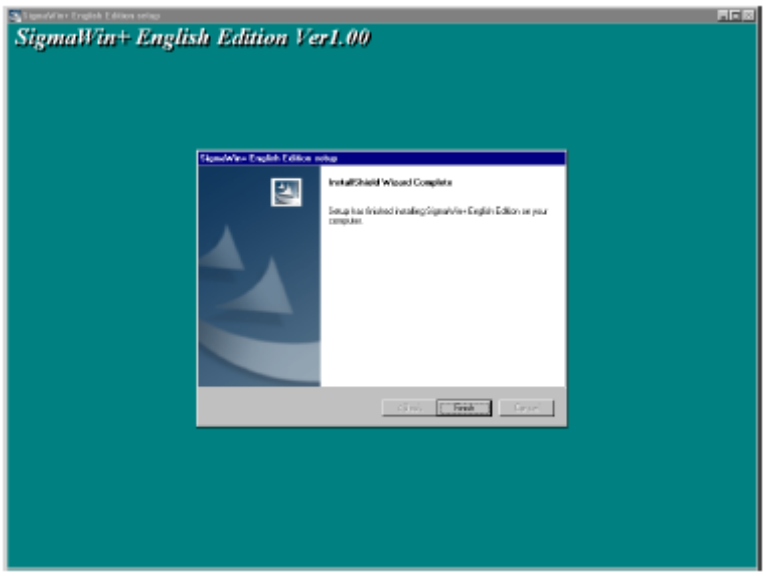

(a)

If dialog box (a) is displayed, click **Finish** to complete the setup.

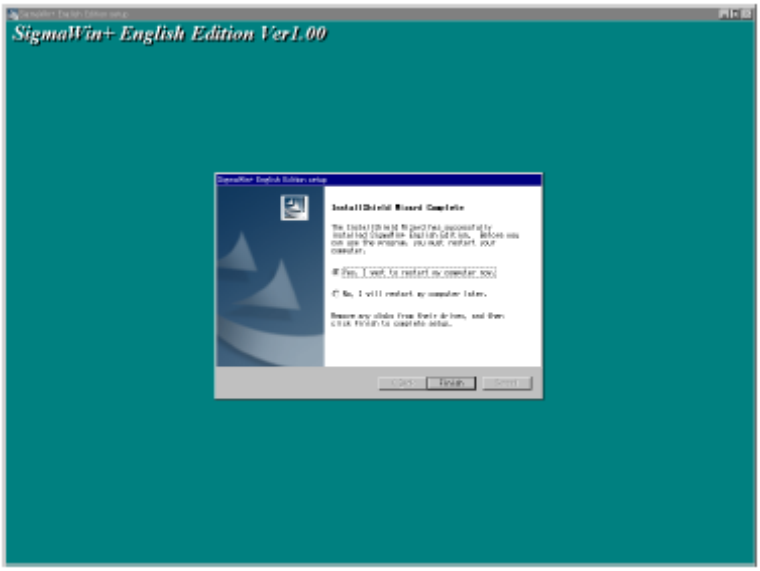

(b)

7. If dialog box (b) is displayed, select **Yes** when asked if you want to restart the computer and then click **Finish** to complete the setup.

The LECY* USB driver cannot be installed by using the SigmaWin+ installer.
When a SigmaWin+ equipped PC is connected to the LECY* through a USB connection, use the following procedure to install the USB driver.
The installation method will vary depending on the operating system (hereinafter referred to as OS). Use the correct procedure for your OS.
The installation procedure is explained assuming that the SigmaWin+ installed folder directory is "C:¥Program Files¥SigmaIDE" and that the CD-ROM drive is D drive. Use the folder directory and drive according to the settings of your PC.

- For Windows 7/Vista

1. Turn on the power to the PC to start Windows 7 or Vista.
2. Confirm that SigmaWin+ has been installed. If it has not yet been installed, please install.
3. Connect the LECY* to the PC using a USB cable, and then turn on the power to the LECY*. The following message will appear.

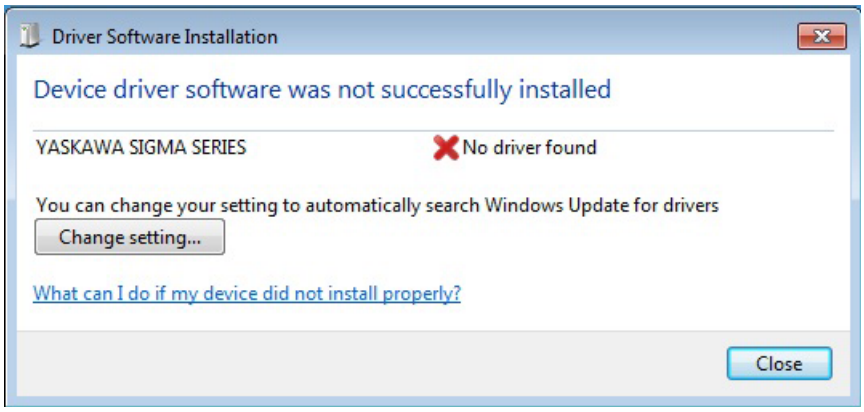

4. Click **Close**.
5. On the **Start** menu, right-click **Computer** and select **Properties**. The property window will appear.
6. Select **Device Manager**. The following window will appear.

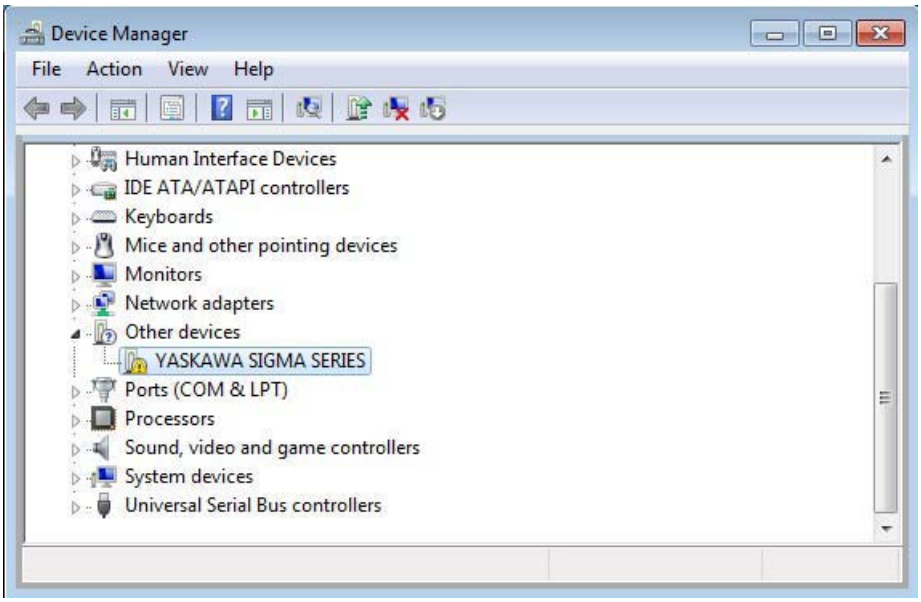

7. Right-click YASKAWA SIGMA SERIES and select Update Drive Software...
8. Select Browse my computer for driver software. The following window will appear.

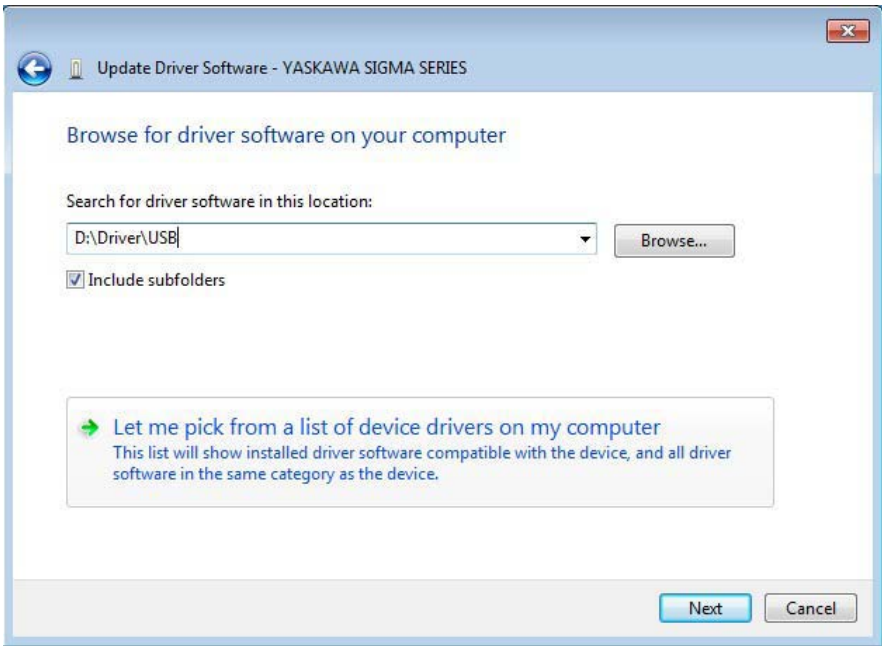

9. Select the **Include subfolders** check box. Click **Browse** to select the folder.
   < For Windows 7 (32 bit) or Windows Vista >
   "C:¥Program Files¥SigmaIDE¥SigmaWinPlus¥Driver¥USB"
   < For Windows 7 (64 bit) >
   "C:¥Program Files (x86)¥SigmaIDE¥SigmaWinPlus¥Driver¥USB¥x64"
10. Click **Next**.
    Installation starts by copying the necessary files. Wait until a message appears informing you that the installation is finished.
    < If a Security Error Message is Displayed >
    Select **Install this driver software anyway**.

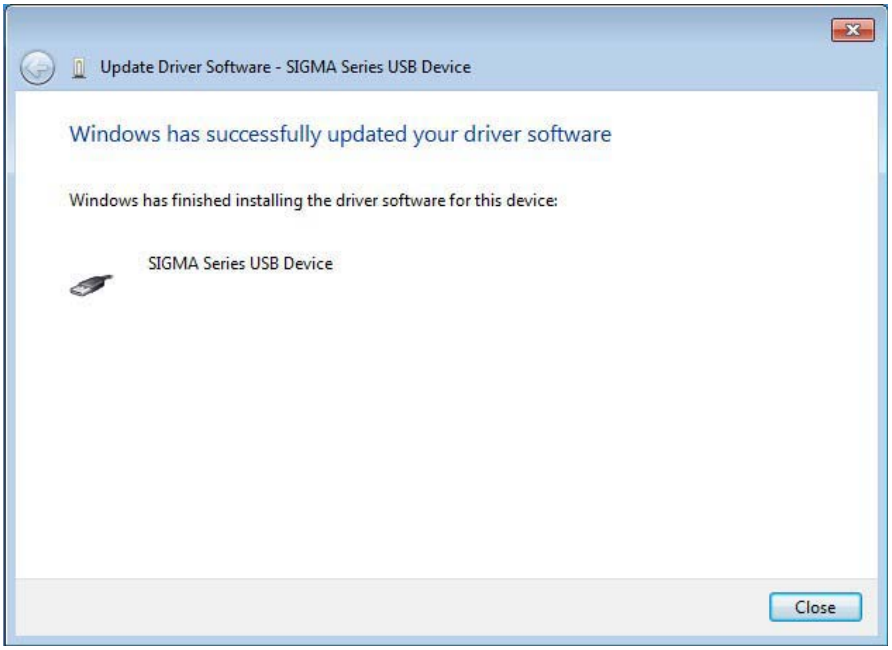

11. When the installation is finished, click **Close**. This completes the driver installation.

- For Windows XP

1. Turn on the power to the PC to start Windows XP.
2. Confirm that SigmaWin+ has been installed. If it has not yet been installed, please install.
3. Connect the LECY* to the PC using a USB cable, and then turn on the power to the LECY*. The Found New Hardware Wizard will appear.

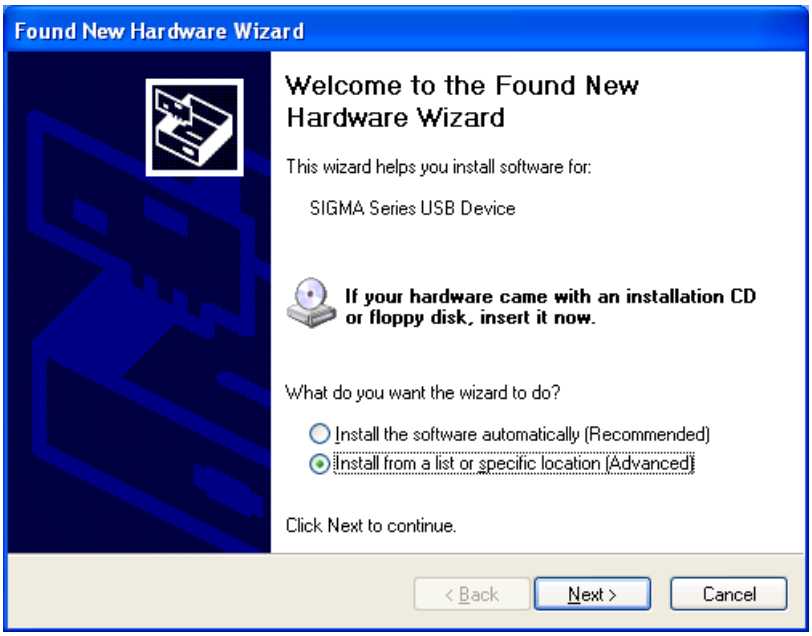

4. Confirm that the Install from a list or specified location [Advanced] option is selected, and then click Next. The next Wizard will appear.

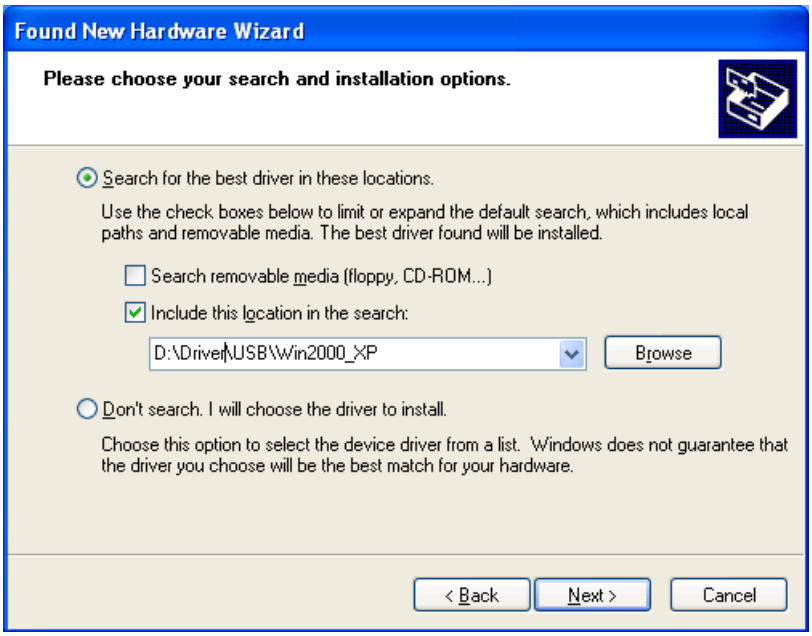

5. Select the **Search for the best driver in these locations.** option and then select the **Include this location in the search:** check box. Click **Browse** to select the folder "C:¥Program Files¥SigmaIDE¥SigmaWinPlus¥Driver¥USB".
6. Click **Next**. The Wizard starts installation by copying the necessary files. Wait until a message appears informing you that the installation is finished.

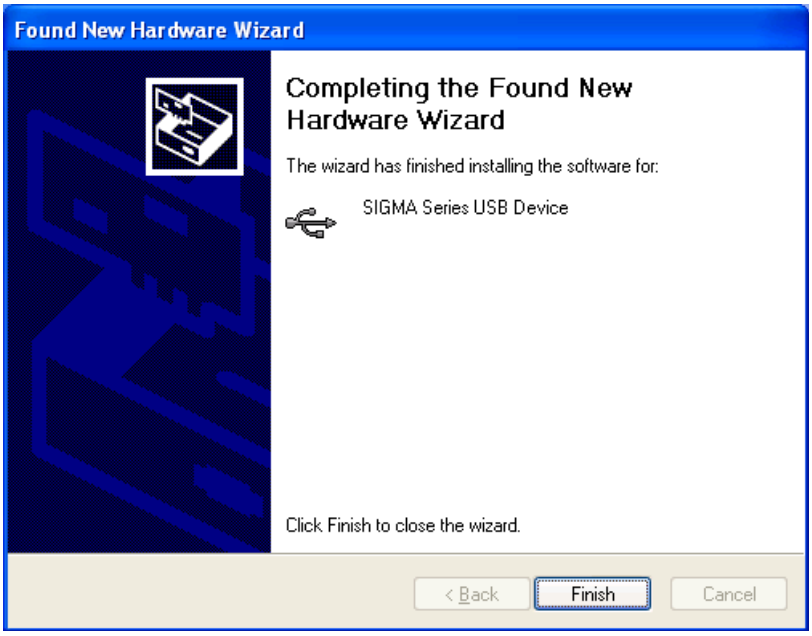

7. When the installation is finished, click **Finish**. This completes the driver installation.

- Confirming the Installation Status

Use the following procedure to make sure that the system recognizes the LECY* as a USB device and that the USB driver is installed correctly.

1. Click the **Start** button, point to **Settings,** and click **Control Panel**.
2. Double-click the **System** icon. The System Properties window will appear.
3. Click the **Hardware** tab and then click **Device Manager.** The Device Manager window will appear.

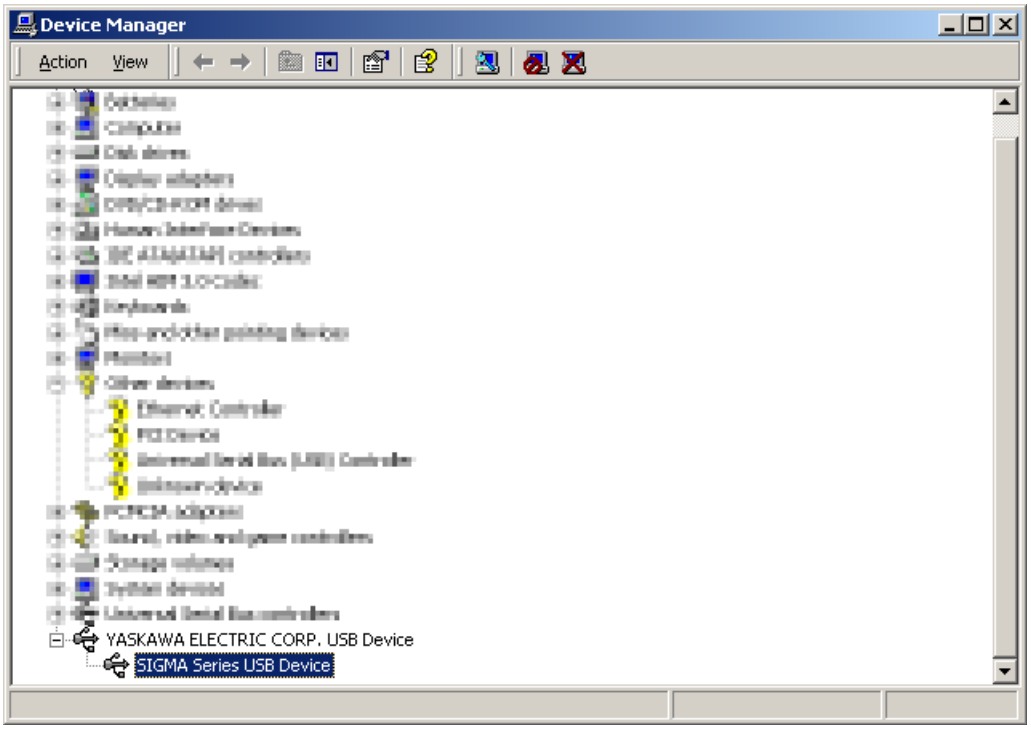

4. Double-click SIGMA Series USB Device in the YASKAWA ELECTRIC CORP. USB Device folder. The SIGMA Series USB Device Properties window will appear.

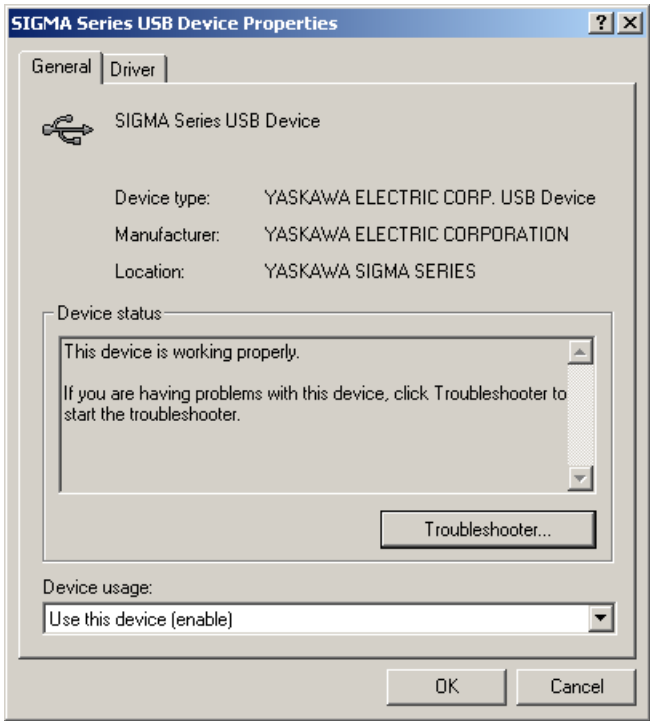

5. Make sure "This device is working properly." is displayed in the **Device status** field.
   When "This device is working properly." is displayed, the LECY* is ready to be used through a USB connection. If it is not displayed, reinstall the USB driver.

2.2.4 Starting SigmaWin+

(1) Start SigmaWin+

Start SigmaWin+:

- from the Start menu
- from a shortcut

- From the Start Menu

To start SigmaWin+ from the Start menu:

1. Click the Start button, and point to Programs.
2. Open the YE_Applications folder.
3. Click SigmaWin+.

- From a Shortcut

To start SigmaWin+ from a shortcut on the desktop:

1. Open the YE_Applications folder on the desktop.
2. Click SigmaWin+.

(2) Selecting a DRIVER

When SigmaWin+ is in initially started, the Connect dialog box appears. Enter the settings for communications between SigmaWin+ and the DRIVER by means of a communication port.

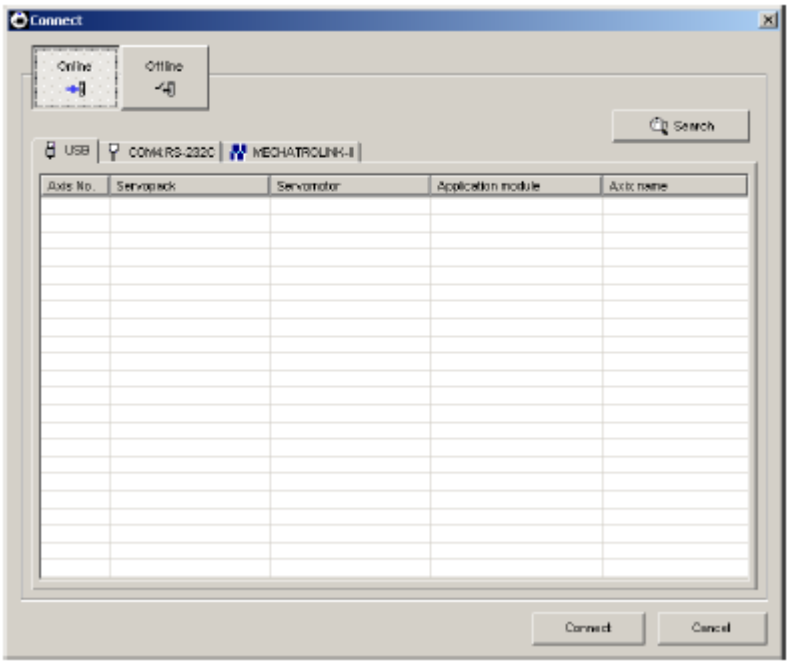

Select the method to set up the DRIVER: online or offline. Online is the default setting.

Online: Select when setting up or tuning the servo drive with the DRIVER connected

Offline: Select when editing parameters or checking screens for tracing or mechanical analysis without the DRIVER connected

<When Offline is selected>

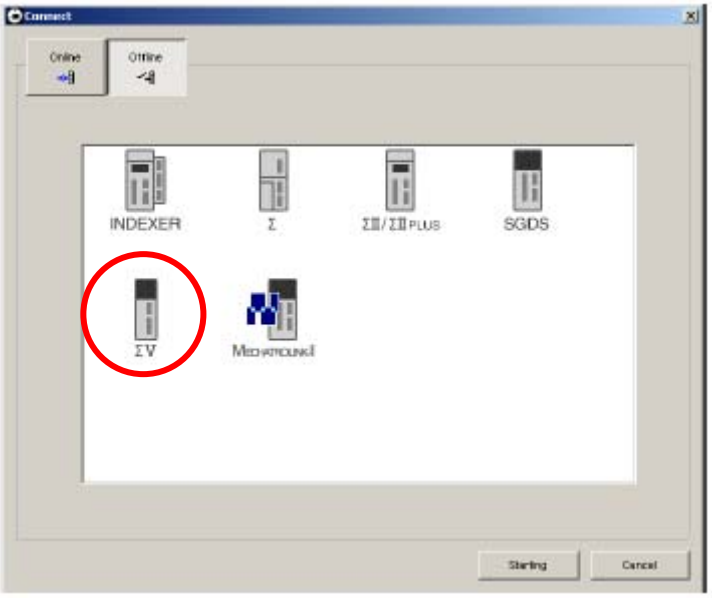

Select the ΣV and click Starting. The SigmaWin+ main window will appear.

<When Online is selected>

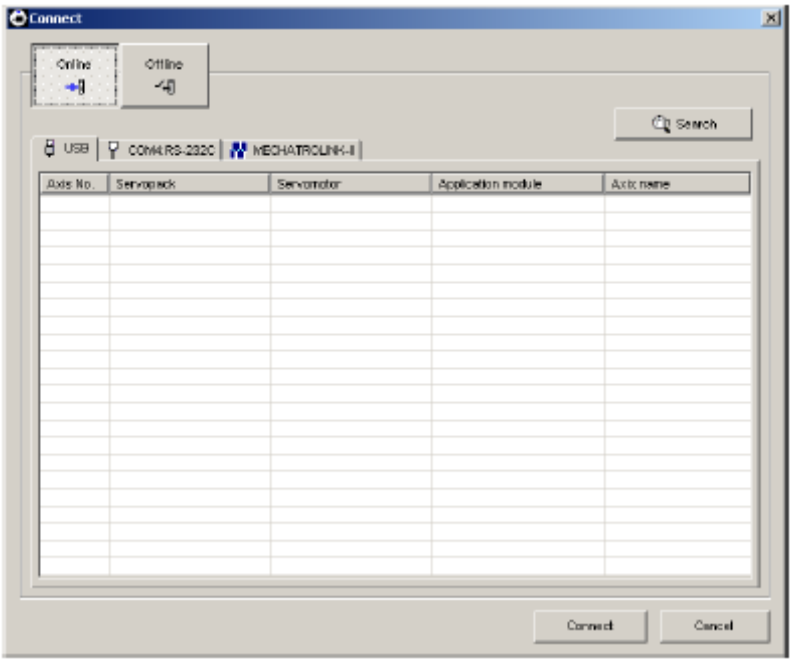

Enter the necessary settings for communication setup.

(1) Click Search.

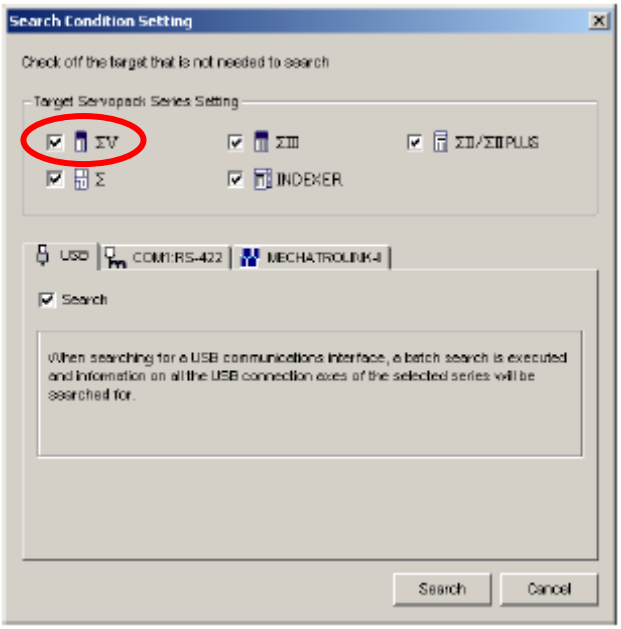

(2) Click ΣV. Then Click Search.
After the DRIVERs have been successfully connected to SigmaWin+, a list of the connected DRIVERs will appear on the screen.

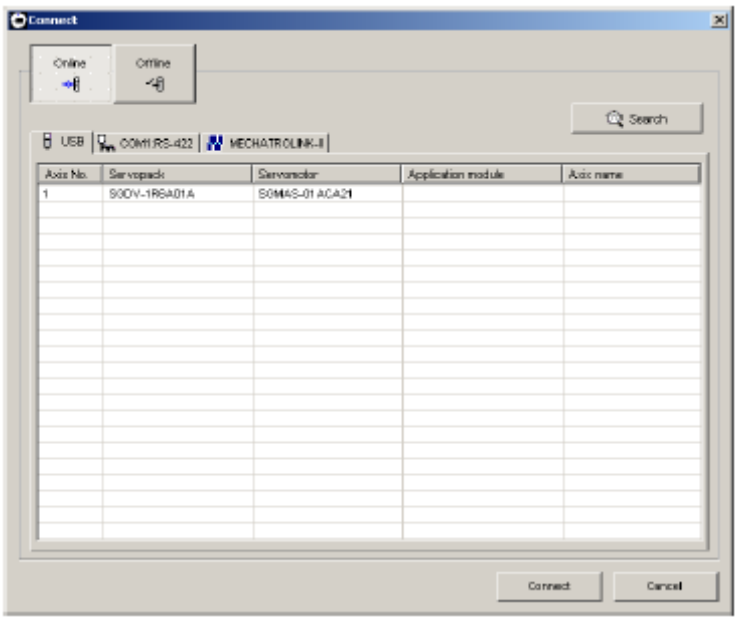

DRIVER Selection Box

(3) Select the DRIVER to be connected and then click Connect, or just doubleclick the DRIVER to be connected. The SigmaWin+ main window will appear.
Click Cancel to close the dialog box.

Operation examples of utility functions, parameters and monitor displays when using a SigmaWin+ are described in this chapter.

For more information on the usage of the SigmaWin+, refer to AC Servo Drives Engineering Tool Sigma Win+ ONLINE MANUAL Σ-V Component.

2.3 Utility Functions

The utility functions are related to the setup and adjustment of the DRIVER.
Refer to *6 utility functions* for details.

2.4 Parameters

This section describes the classifications, methods of notation, and settings for parameters given in this manual.

2.4.1 Parameter Classification

Parameters of the LECY Series DRIVER are classified into two types of parameters. One type of parameters is required for setting up the basic conditions for operation and the other type is required for tuning parameters that are required to adjust servomotor characteristics.

Classification	Meaning	Display Method	Setting Method
Setup Parameters	Parameters required for setup.	Always displayed (Factory setting: Pn00B.0 = 0)	Set each parameter individually.
Tuning Parameters	Parameters for tuning control gain and other parameters.	Set Pn00B.0 to 1.	There is no need to set each parameter individually.

There are two types of notation used for parameters, one for parameter that requires a value setting (parameter for numeric settings) and one for parameter that requires the selection of a function (parameter for selecting functions).
The notation and settings for both types of parameters are described next.

2.4.2 Notation for Parameters

(1) Parameters for Numeric Settings

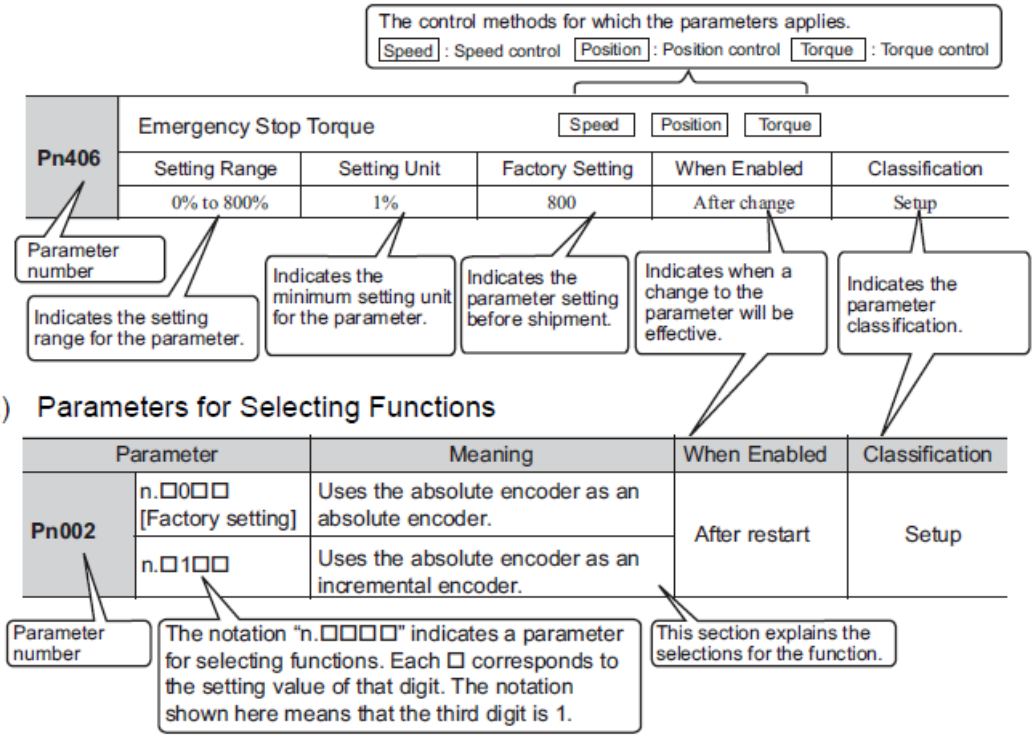

2.4.3 Setting Parameters

In the SigmaWin+ Σ-V component main window, click **Parameters** and then click **Edit Parameters**. The Parameter Editing window for the online mode appears.
For more information on the usage of the setting parameters, refer to AC Servo Drives Engineering Tool Sigma Win+ ONLINE MANUAL Σ-V Component.

2.5 Monitor Displays

The monitor displays can be used for monitoring the reference values, I/O signal status, and DRIVER internal status.
The System Monitor window will automatically open when the SigmaWin+ starts. Or, in the SigmaWin+ Σ-V component window, click **Monitor**, point to **Monitor**, and then click **System Monitor**.
For more information on the usage of the monitor display, refer to AC Servo Drives Engineering Tool Sigma Win+ ONLINE MANUAL Σ-V Component.

3. Wiring and Connection

3.1 Main Circuit Wiring

The names and specifications of the main circuit terminals are given below.
Also this section describes the general precautions for wiring and precautions under special environments.

3.1.1 Main Circuit Terminals

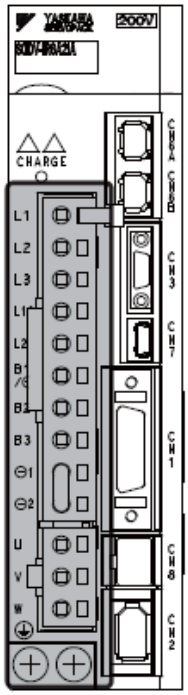

: Main circuit terminals

Terminal Symbols	Name	Specification
L1, L2, L3	Main circuit power input terminals	Three-phase 200 to 230 V, +10% to -15% (50/60 Hz)
L1C, L2C	Control power input terminals	Single-phase 200 to 230 V, +10% to -15% (50/60 Hz)
B1/⊕, B2*1	Regenerative resistor connection terminals	If the internal regenerative resistor is insufficient, connect a regenerative resistor between B1/⊕ and B2. If LECYM2-V9 is used, remove the lead or shorting bar between B2 and B3, and connect a regenerative resistor between B1/⊕ and B2. Note: The Regenerative resistor is not included.
⊖1, ⊖2	DC reactor connection terminal for power supply harmonic suppression	connection terminals are short-circuited when the DRIVER is shipped from the factory: ⊖1 and ⊖2.
B1/	Main circuit positive terminal	Use when DC power supply input is used.
⊖2 or⊖	Main circuit negative terminal	
U, V, W	Servomotor connection terminals	Use for connecting to the servomotor.
⏚	Ground terminals (× 2)	Use for connecting the power supply ground terminal and servomotor ground terminal.

∗1. Do not short-circuit between B1/⊕ and B2. It may damage the DRIVER.

3.1.2 Using a Standard Power Supply (Three-phase 200 V)

(1) Wire Types

Use the following type of wire for main circuit.

Cable Type		Allowable Conductor Temperature ˚C
Symbol	Name	
IV	600 V grade polyvinyl chloride insulated wire	60
HIV	600 V grade heat-resistant polyvinyl chloride insulated wire	75

The following table shows the wire sizes and allowable currents for three wires. Use wires with specifications equal to or less than those shown in the table.

- 600 V grade heat-resistant polyvinyl chloride insulated wire (HIV)

AWG Size	Wire size (Nominal Cross Section Area) (mm^2)	Configuration (Number of Wires/mm^2)	Conductive Resistance (Ω/km)	Allowable Current at Surrounding Air Temperature (A)		
				30˚C	40˚C	50˚C
20	0.5	19/0.18	39.5	6.6	5.6	4.5
19	0.75	30/0.18	26.0	8.8	7.0	5.5
18	0.9	37/0.18	24.4	9.0	7.7	6.0
16	1.25	50/0.18	15.6	12.0	11.0	8.5
14	2.0	7/0.6	9.53	23	20	16

Note: The values in the table are for reference only.

(2) Main Circuit Wires

This section describes the main circuit wires for DRIVERs.

IMPORTANT

- The specified wire sizes are for use when the three lead cables are bundled and when the rated electric current is applied with a surrounding air temperature of 40°C.
- Use a wire with a minimum withstand voltage of 600 V for the main circuit.
- If cables are bundled in PVC or metal ducts, take into account the reduction of the allowable current.
- Use a heat-resistant wire under high surrounding air or panel temperatures, where polyvinyl chloride insulated wires will rapidly deteriorate.

- Three-phase, 200 V

Terminal Symbols	Name	LECYM2-□□			
		V5	V7	V8	V9
L1, L2, L3	Main circuit power input terminals	HIV1.25		HIV2.0	
L1C, L2C	Control power input terminals	HIV1.25			
U, V, W	Servomotor connection terminals	HIV1.25		HIV2.0	
B1/⊕, B2	External regenerative resistor connection terminals	HIV1.25			
⏚	Ground terminal	HIV2.0 or larger			

(3) Typical Main Circuit Wiring Examples

Note the following points when designing the power ON sequence.

- Design the power ON sequence so that main power is turned OFF when a servo alarm signal (ALM) is output.
- The ALM signal is output for a maximum of five seconds when the control power is turned ON. Take this into consideration when designing the power ON sequence. Design the sequence so the ALM signal is activated and the alarm detection relay (1Ry) is turned OFF to stop the main circuit's power supply to the DRIVER.

- Select the power supply specifications for the parts in accordance with the input power supply.

IMPORTANT

- When turning ON the control power supply and the main circuit power supply, turn them ON at the same time or turn the main circuit power supply after the control power supply. When turning OFF the power supplies, first turn the power for the main circuit OFF and then turn OFF the control power supply.

The typical main circuit wiring examples are shown below.

⚠ WARNING

- Do not touch the power supply terminals after turning OFF the power. High voltage may still remain in the DRIVER, resulting in electric shock. When the voltage is discharged, the charge indicator will turn OFF. Make sure the charge indicator is OFF before starting wiring or inspections.

- Three-phase 200 V, LECYU2-V□

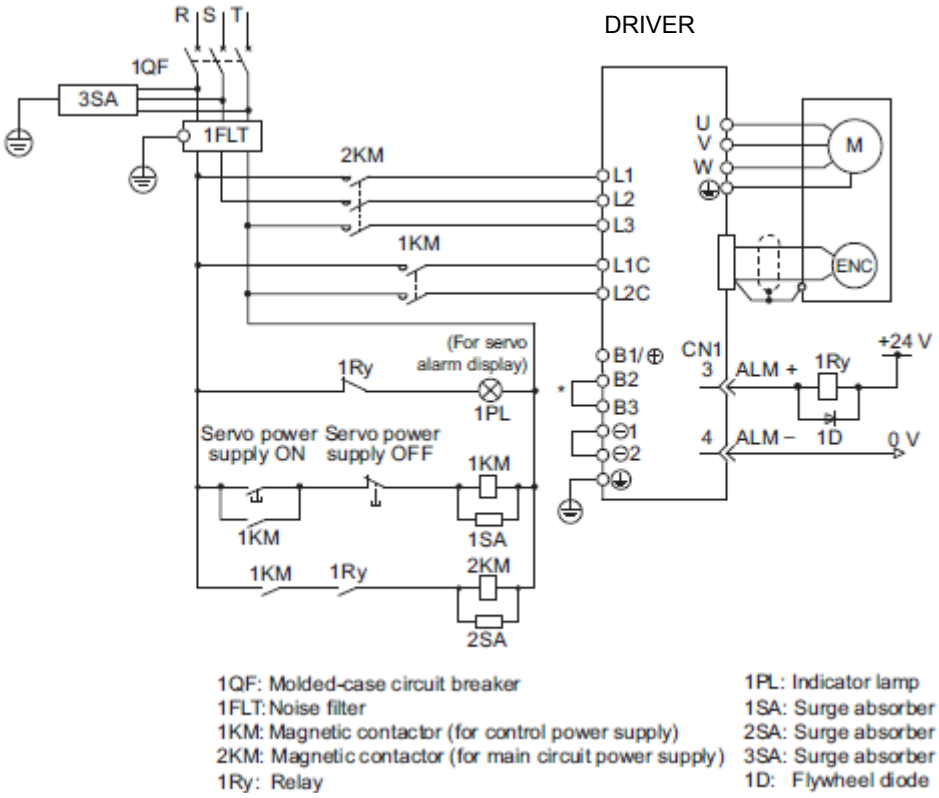

∗ For the LECYU2-V5, V7, V8, terminals B2 and B3 are not short-circuited.
Do not short-circuit these terminals.

(4) Power Supply Capacities and Power Losses

The following table shows the DRIVER's power supply capacities and power losses.

Main Circuit Power Supply	Maximum Applicable Servomotor Capacity [kW]	DRIVER Model LECYU2-□□	Power Supply Capacity per DRIVER [kVA]	Output Current [Arms]	Main Circuit Power Loss [W]	Regenerative Resistor Power Loss [W]	Control Circuit Power Loss [W]	Total Power Loss [W]
Three-phase, 200 V	0.1	V5	0.3	0.91	7.3	-	17	24.3
	0.2	V7	0.6	1.6	13.5			30.5
	0.4	V8	1	2.8	24.0			41.0
	0.75	V9	1.6	5.5	43.8	8		68.8

Note 1. LECYU2-V5, V7, and V8 do not have built-in regenerative resistors. Connect an external regenerative resistors if the regenerative energy exceeds the specified value.
2. Regenerative resistor power losses are the allowable losses. Take the following actions if this value is exceeded.
•Remove the lead or shorting bar between terminals B2 and B3 on the DRIVER main circuit for LECYU2-V9.
•Install an external regenerative resistors. Refer to *3.7 Connecting Regenerative Resistors* for details.
3. Both the regenerative resistor unit and the external regenerative resistors are not included.

(5) How to Select Molded-case Circuit Breaker and Fuse Capacities

The following table shows the DRIVER's current capacities and inrush current. Select a molded-case circuit breaker and fuses in accordance with these specifications.

Main Circuit Power Supply	Maximum Applicable Servomotor Capacity [kW]	DRIVER Model LECYU2 -□□	Power Supply Capacity per DRIVER [kVA]	Current Capacity		Inrush Current	
				Main Circuit [Arms]	Control Circuit [Arms]	Main Circuit [A0-p]	Control Circuit [A0-p]
Three-phase, 200 V	0.1	V5	0.3	1.0	0.2	33	70
	0.2	V7	0.6	2.0			
	0.4	V8	1	3.0			
	0.75	V9	1.6	6.0			33

Note 1. To comply with the EU low voltage directive, connect a fuse to the input side as protection against accidents caused by short-circuits.
Select fuses or molded-case circuit breakers that are compliant with UL standards.
The table above also provides the net values of current capacity and inrush current. Select a fuse and a molded-case circuit breaker which meet the breaking characteristics shown below.
- Main circuit, control circuit: No breaking at three times the current values shown in the table for 5 s.
- Inrush current: No breaking at the current values shown in the table for 20 ms.

3.1.3 Using the DRIVER with Single-phase, 200 V Power Input

LECYU2 series three-phase 200 V power input DRIVER can be used also with a single-phase 200 V power supply.

When using the DRIVER with single-phase, 200 V power input, set parameter Pn00B.2 to 1.

(1) Parameter Setting

- Single-phase Power Input Selection

Parameter		Meaning	When Enabled	Classification
Pn00B	n.□0□□ [Factory setting]	Enables use of three-phase power supply for three-phase DRIVER.	After restart	Setup
	n.□1□□	Enables use of single-phase power supply for three-phase DRIVER.		

⚠ WARNING

- If single-phase 200 V is input to a DRIVER without changing the set- ting of Pn00B.2 to 1 (single-phase power input), a main circuit cable open phase alarm (A.F10) will be detected.
- When using a single-phase 200 V power supply, the DRIVER may not be able to produce the same servomotor torque-speed characteristics as using a three- phase 200 V power input. Refer to the diagram of each servomotor torque-speed characteristics.

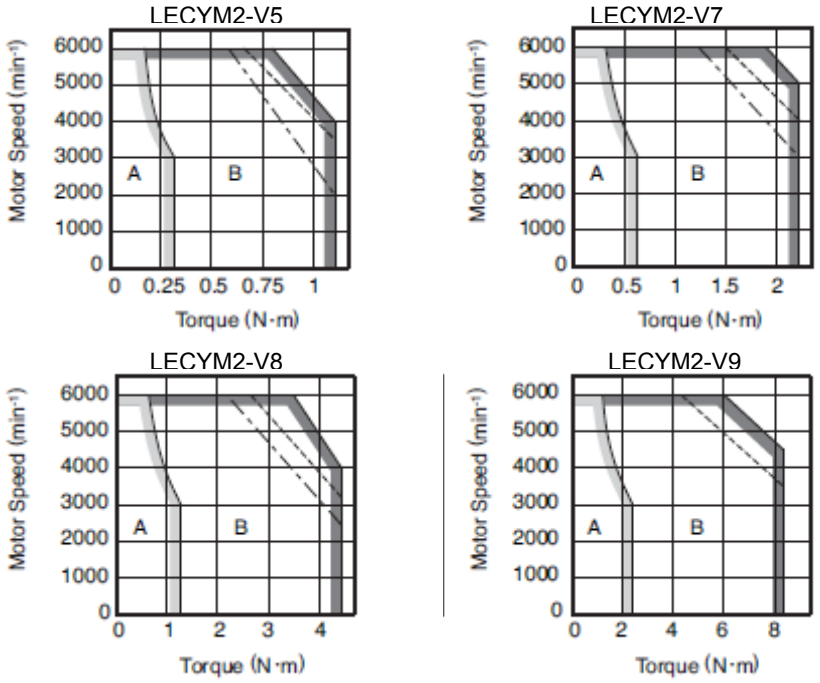

(2) Main Circuit Power Input Terminals

Connect a single-phase 200 V power supply of the following specifications to L1 and L2 terminals.

The specifications of the power supplies other than the main circuit power supply are the same as for three- phase power supply input.

Terminal Sym-bols	Name	Specifications
L1, L2	Main circuit power input terminals	Single-phase 200 V to 230 V, +10% to -15% (50/60 Hz)
L3*1	–	None

*1. Do not use L3 terminal.

(3) Main Circuit Wire for DRIVERs

Terminal Symbols	Name	Model LECYU2-□□ (Unit: mm^2)			
		V5	V7	V8	V9
L1, L2	Main circuit power input terminals	HIV1.25		HIV2.0	
L1C, L2C	Control power input terminals	HIV1.25			
U, V, W	Servomotor connection terminals	HIV1.25			HIV2.0
B1/⊕, B2	External regenerative resistors con- nection terminals	HIV1.25			
⏚	Ground terminal	HIV2.0 or larger			

(4) Wiring Example with Single-phase 200-V Power Supply Input
- DRIVER with Single-phase, 200-V Power Supply

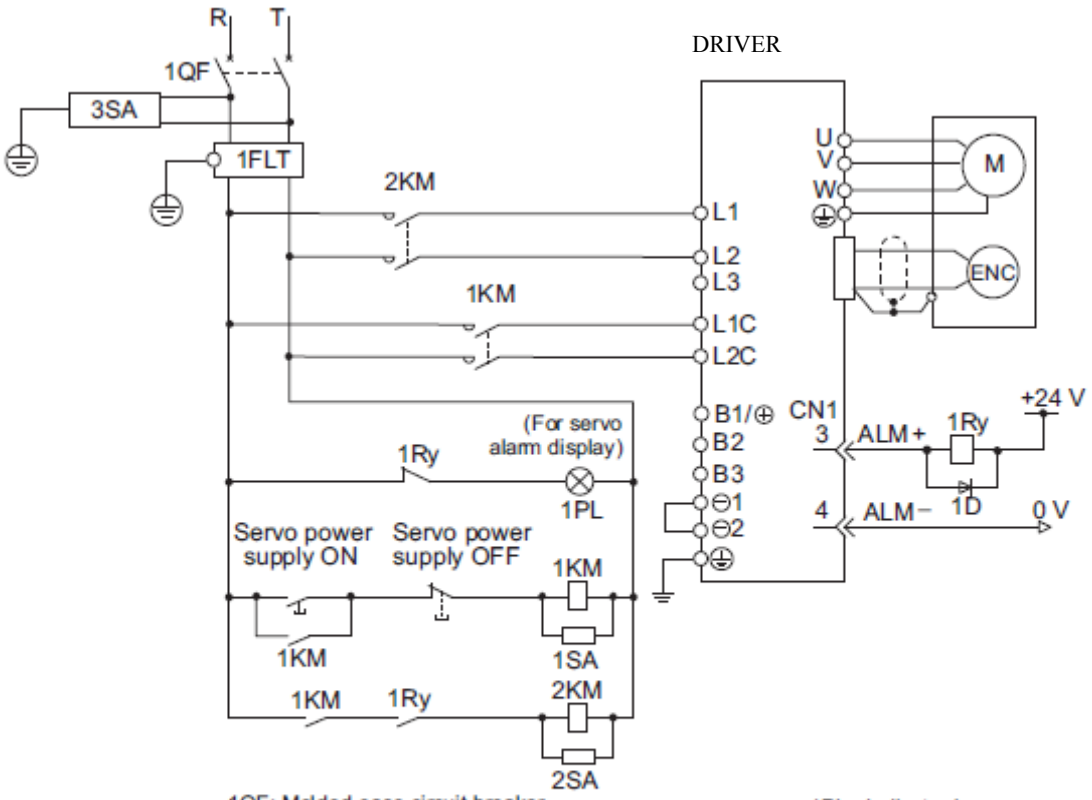

(5) Power Supply Capacities and Power Losses

The following table shows DRIVER's power supply capacities and power losses when using single- phase 200 V power supply.

Main Circuit Power Supply	Maximum Applicable Servomotor Capacity [kW]	DRIVER Model LECYU2-□□	Power Supply Capacity per DRIVER [kVA]	Output Current [Arms]	Main Circuit Power Loss [W]	Regenerative Resistor Power Loss [W]	Control Circuit Power Loss [W]	Total Power Loss [W]
Single-phase, 200 V	0.1	V5	0.3	0.91	7.4	-	17	24.4
	0.2	V7	0.7	1.6	13.7			30.7
	0.4	V8	1.2	2.8	24.9			41.9
	0.75	V7	1.9	5.5	52.7	8		77.7

Note 1. LECYU2-V5, V7, and V8 DRIVERs do not have built-in regenerative resistors. If the regenerative energy exceeds the specified value, connect an external regenerative resistors between B1/⊕ and B2.

2. Regenerative resistor power losses are allowable losses. Take the following action if this value is exceeded.
- Remove the lead or shorting bar between terminals B2 and B3 on the DRIVER main circuit of LECYU2-V7 DRIVER.
- Install an external regenerative resistors between external regenerative resistors connection terminals B1/⊕ and B2.

(6) How to Select Molded-case Circuit Breaker and Fuse Capacities

The following table shows the DRIVER's current capacities and inrush current when using single-phase 200 V power supply. Select a molded-case circuit breaker and fuses in accordance with these specifications.

Main Circuit Power Supply	Maximum Applicable Servomotor Capacity [kW]	DRIVER Model LECYU2-□□	Power Supply Capacity per DRIVER [kVA]	Current Capacity		Inrush Current	
				Main Circuit [Arms]	Control Circuit [Arms]	Main Circuit [A0-p]	Control Circuit [A0-p]
Single-phase, 200 V	0.1	V1	0.3	2	0.2	33	70
	0.2	V2	0.7	3			
	0.4	V4	1.2	5			
	0.75	V7	1.9	9			33

Note 1. To comply with the EU low voltage directive, connect a fuse to the input side as protection against accidents caused by short-circuits. Select the fuse for the input side that are compliant with UL standards.
The table above also provides the net values of current capacity and inrush current. Select a fuse and a molded- case circuit breaker which meet the breaking characteristics shown below.
•Main circuit, control circuit: No breaking at three times the current values shown in the table for 5 s.
•Inrush current: No breaking at the current values shown in the table for 20 ms.

3.1.4 Using the DRIVER with a DC Power Input

(1) Parameter Setting

When using a DC power supply, make sure to set the parameter Pn001.2 to 1 (DC power input supported) before inputting DC power.

Parameter		Meaning	When Enabled	Classification
Pn001	n.□0□□	Enables use of AC power input.	After restart	Setup
	n.□1□□	Enables use of DC power input.		

Observe the following precautions.

⚠ WARNING

- Either AC or DC power can be input to the 200-V DRIVERs. Always set Pn001.2 to 1 to specify a DC power input before inputting DC power. If DC power is input without changing the parameter setting, the DRIVER's internal elements will burn and may cause fire or damage to the equipment.
- With a DC power input, time is required to discharge electricity after the main power supply is turned OFF. A high residual voltage may remain in the DRIVER after the power supply is turned OFF. Be careful not to get an electric shock.
- Install fuses on the wires if DC power is used.
- Servomotor returns a regenerated energy to the power supply. The DRIVER that can use a DC power supply is not capable of processing the regenerated energy. Provide measures to process the regenerated energy on the power supply.
- With a DC power input, connect an external inrush current limit circuit.
  Failure to observe this caution may result in damage to the equipment.

(2) DC Power Supply Input Terminals for the Main and Control Circuits

Terminal Symbols	Name	Specifications
B1/⊕	Main circuit positive terminal	270 to 320 VDC
⊖2	Main circuit negative terminal	0 VDC
L1C, L2C	Control power input terminal	200 to 230 VAC

(3) Wiring Example with DC Power Supply Input

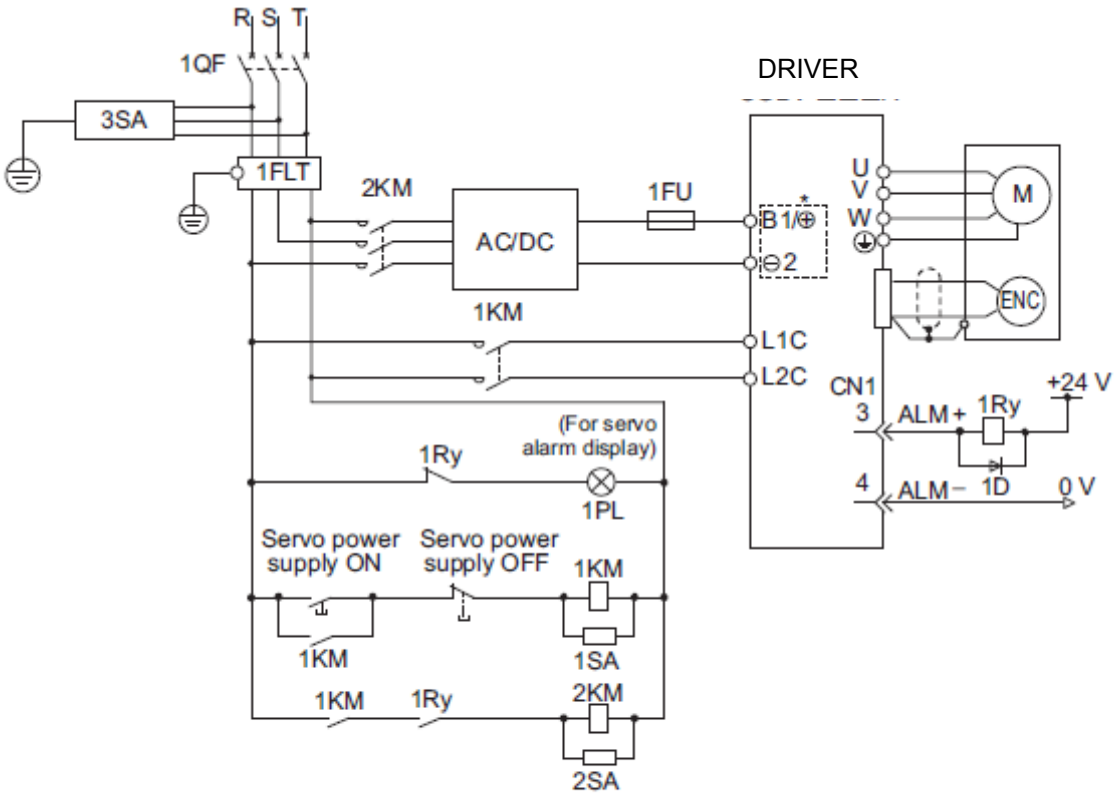

1QF: Molded-case circuit breaker
1FLT: Noise filter
1KM: Magnetic contactor (for control power supply)
2KM: Magnetic contactor (for main circuit power supply)
1Ry: Relay
1PL: Indicator lamp
1SA: Surge absorber
2SA: Surge absorber
3SA: Surge absorber
1D: Flywheel diode

3.1.5 Using More Than One DRIVER

This section shows an example of the wiring and the precautions when more than one DRIVER is used.

(1) Wiring Example

Connect the alarm output (ALM) terminals for three DRIVERs in series to enable alarm detection relay 1RY to operate. When the alarm occurs, the ALM output signal transistor is turned OFF.

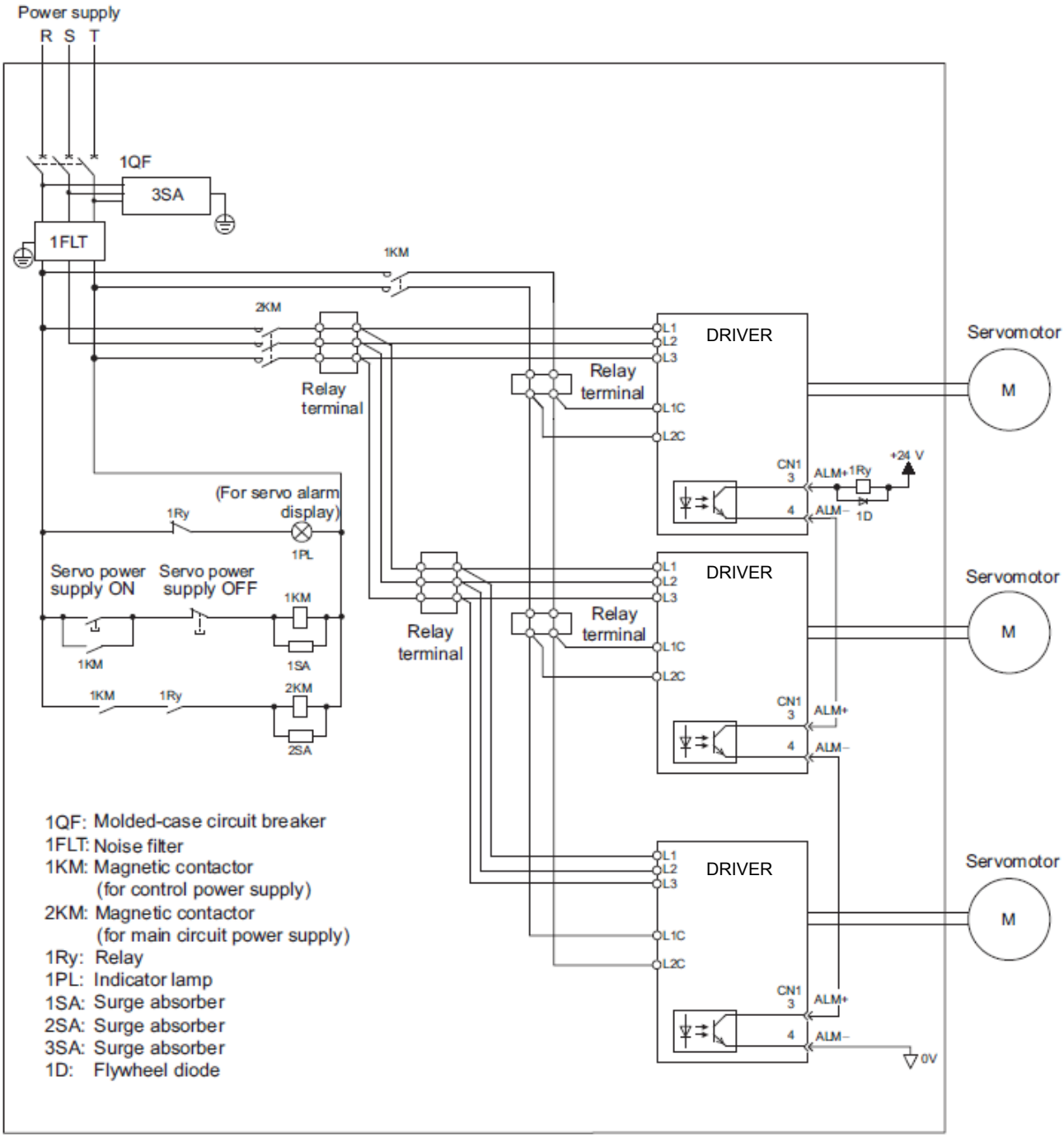

(2) Precautions

Multiple DRIVERs can share a single molded-case circuit breaker (1QF) or noise filter. Always select a molded-case circuit breaker or noise filter that has enough capacity for the total power supply capacity (load conditions) of the DRIVERs.

3.1.6 General Precautions for Wiring

IMPORTANT

- Use a molded-case circuit breaker (1QF) or fuse to protect the main circuit.
  The DRIVER connects directly to a commercial power supply; it is not isolated through a transformer or other device.
  Always use a molded-case circuit breaker (1QF) or fuse to protect the servo system from accidents involving different power system voltages or other accidents.
- Install a ground fault detector.
  The DRIVER does not have a built-in protective circuit for grounding.
  To configure a safer system, install a ground fault detector against overloads and short-circuiting, or install a ground fault detector combined with a molded-case circuit breaker.
- Do not turn the power ON and OFF more than necessary.
- Do not use the DRIVER for applications that require the power to turn ON and OFF frequently. Such applications will cause elements in the DRIVER to deteriorate.
- As a guideline, at least one hour should be allowed between the power being turned ON and OFF once actual operation has been started.

To ensure safe, stable application of the servo system, observe the following precautions when wiring.
Design and arrange the system so that each cable will be as short as possible.

- Use shielded twisted-pair cables or screened unshielded twisted-pair cables for I/O signal cables and encoder cables.
- The maximum wiring length is 3 m for I/O signal cables, 50 m for encoder cables or motor cables.

Observe the following precautions when wiring the ground.

- Use a cable as thick as possible (at least 2.0 mm^2).
- Grounding to a resistance of 100 Ω or less for 200-V DRIVER is recommended.
- Be sure to ground at only one point.
- Ground the servomotor directly if the servomotor is insulated from the machine.

The signal cable conductors are as thin as 0.2 mm^2 or 0.3 mm^2. Do not impose excessive bending force or tension.

3.1.7 Specifications of motor cables and encoder cables

Name	Lock	Servo motor Rated Output	Length	Order No. Standard LE-CY□-S□A-□	Order No. Robot LE-CY□-R□A-□	Specifications	Details
Motor cable	without lock	100W	3m	LE-CYM-S3A-5	LE-CYM-R3A-5	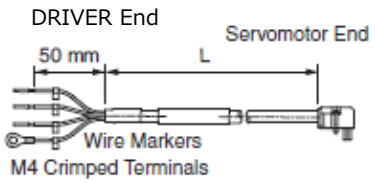	(1)
			5m	LE-CYM-S5A-5	LE-CYM-R5A-5		
			10m	LE-CYM-SAA-5	LE-CYM-RAA-5		
			20m	LE-CYM-SCA-5	LE-CYM-RCA-5		
		200W 400W	3m	LE-CYM-S3A-7	LE-CYM-R3A-7		
			5m	LE-CYM-S5A-7	LE-CYM-R5A-7		
			10m	LE-CYM-SAA-7	LE-CYM-RAA-7		
			20m	LE-CYM-SCA-7	LE-CYM-RCA-7		
		750W	3m	LE-CYM-S3A-9	LE-CYM-R3A-9		
			5m	LE-CYM-S5A-9	LE-CYM-R5A-9		
			10m	LE-CYM-SAA-9	LE-CYM-RAA-9		
			20m	LE-CYM-SCA-9	LE-CYM-RCA-9		
Motor cable for with lock	with lock	100W	3m	LE-CYB-S3A-5	LE-CYB-R3A-5	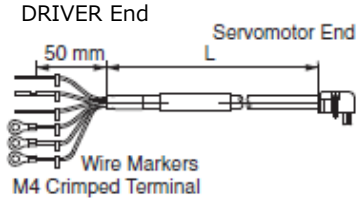	(2)
			5m	LE-CYB-S5A-5	LE-CYB-R5A-5		
			10m	LE-CYB-SAA-5	LE-CYB-RAA-5		
			20m	LE-CYB-SCA-5	LE-CYB-RCA-5		
		200W 400W	3m	LE-CYB-S3A-7	LE-CYB-R3A-7		
			5m	LE-CYB-S5A-7	LE-CYB-R5A-7		
			10m	LE-CYB-SAA-7	LE-CYB-RAA-7		
			20m	LE-CYB-SCA-7	LE-CYB-RCA-7		
		750W	3m	LE-CYB-S3A-9	LE-CYB-R3A-9		
			5m	LE-CYB-S5A-9	LE-CYB-R5A-9		
			10m	LE-CYB-SAA-9	LE-CYB-RAA-9		
			20m	LE-CYB-SCA-9	LE-CYB-RCA-9		
Encoder cable	100W 200W 400W 750W		3m	LE-CYE-S3A	LE-CYE-R3A	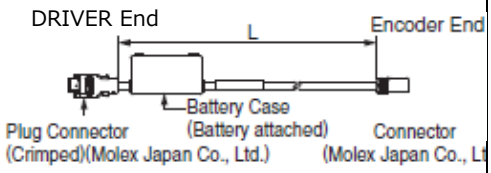	(3)
			5m	LE-CYE-S5A	LE-CYE-R5A		
			10m	LE-CYE-SAA	LE-CYE-RAA		
			20m	LE-CYE-SCA	LE-CYE-RCA		

(1) Wiring Specifications for Motor cable

DRIVER-end Leads

Wire Color	Signal
Green/yellow	FG
Blue	Phase W
White	Phase V
Red	Phase U

Servomotor-end Connector

Signal	Pin No.
FG	1
Phase W	2
Phase V	3
Phase U	4
–	5
–	6

(2) Wiring Specifications for Motor cable with lock

DRIVER-end Leads

Wire Color	Signal
Green/yellow	FG
Blue	Phase W
White	Phase V
Red	Phase U
Black	ロック
Black	ロック

Servomotor-end Connector

Signal	Pin No.
FG	1
Phase W	2
Phase V	3
Phase U	4
ロック	5
ロック	6

Note: No polarity for connection to a lock.

(3) Wiring Specifications for Encoder cable

- Standard type

DRIVER End

Pin No.	Signal
6	/PS
5	PS
4	BAT (–)
3	BAT (+)
2	PG 0V
1	PG 5V
Shell	FG

Encoder (Servomotor) End

Pin No.	Wire Color
5	Light blue/white
4	Light blue
8	Orange/white
9	Orange
3	Black
6	Red
Shell	FG

Shield Wire

Battery Case

Pin No.	Signal
2	BAT (–)
1	BAT (+)

- Robot type

DRIVER End

Pin No.	Signal
6	/PS
5	PS
4	BAT (–)
3	BAT (+)
2	PG 0V
1	PG 5V
Shell	FG

Encoder (Servomotor) End

Pin No.	Wire Color
5	Black/pink
4	Red/pink
8	Black/light blue
9	Red/light blue
3	Green
6	Orange
Shell	FG

Shield Wire

Battery Case

Pin No.	Signal
2	BAT (–)
1	BAT (+)

3.2 I/O Signal Connections

This section describes the names and functions of I/O signals (CN1). Also connection examples by control method are shown.

3.2.1 /O Signal (CN1) Names and Functions

The following table shows the names and functions of I/O signals (CN1).

(1) Input Signals

Signal	Pin No.	Name	Function	Refer-ence Section
P-OT (/SI1) N-OT (/SI2)	7 8	Forward run prohibited, Reverse run prohibited	With overtravel prevention: Stops servomotor when movable part travels beyond the allowable range of motion.	4.3.1
/DEC (/SI3)	9	Homing deceleration switch signal	Connects the deceleration limit switch for homing.	–
/EXT 1 (/SI4) /EXT 2 (/SI5) /EXT 3 (/SI6)	10 11 12	External latch signal 1 External latch signal 2 External latch signal 3	Connects the external signals that latch the current feedback pulse counter.	–
/SI0	13	General-purpose input signal	Used for general-purpose input. Monitored in the I/O monitor field of MECHATROLINK-II.	–
+24VIN	6	Control power supply for sequence signal	Control power supply input for sequence signals. Allowable voltage fluctuation range: 11 to 25 V Note: The 24 VDC power supply is not included.	3.4.1
/P-CL /N-CL	Can be allocated	Forward external torque limit Reverse external torque limit	The allocation of an input signal to a pin can be changed in accordance with the function required.	–

Note 1. The allocation of the input signals (/SI1 to /SI6) can be changed. For details, refer to *3.3.1 Input Signal Allocations*.

2. If the Forward run prohibited/ Reverse run prohibited function is used, the DRIVER is stopped by software controls, not by electrical or mechanical means. If the application does not satisfy the safety requirements, add an external circuit for safety reasons as required.

(2) Output Signals

Signal	Pin No.	Name	Function	Reference Section
ALM+ ALM-	3 4	Servo alarm output signal	Turns OFF when an error is detected.	–
/BK+ (/SO1+) /BK- (/SO1-)	1 2	Lock interlock signal	Controls the lock. The lock is released when the signal turns ON. Allocation can be changed to general-purpose output signals (/SO1+, /SO1-).	4.3.2
/SO2+ /SO2- /SO3+ /SO3-	23 24 25 26	General-purpose output signal	Used for general-purpose output. Note: Set the parameter to allocate a function.	–
/COIN /V-CMP /TGON /S-RDY /CLT /VLT /WARN /NEAR	Can be allocated	Positioning completion Speed coincidence detection Rotation detection servo ready Torque limit Speed limit detection Warning Near	The allocation of an output signal to a pin can be changed in accordance with the function required.	–
PAO /PAO	17 18	Phase-A signal	Encoder output pulse signals for two-phase pulse train with 90° phase differential	4.4.4 4.7.8
PBO /PBO	19 20	Phase-B signal		
PCO /PCO	21 22	Phase-C signal	Origin pulse output signal	
SG	16	Signal ground	Connects to the 0 V pin on the control circuit of the PC or PLC...etc.	–
FG	Shell	Frame ground	Connected to frame ground if the shielded wire of the I/O signal cable is connected to the connector shell.	–

Note: The allocation of the output signals (/SO1 to /SO3) can be changed. For details, refer to *3.3.2 Output Signal Allocations.*

3.2.2 Safety Function Signal (CN8) Names and Functions

The following table shows the terminal layout of safety function signals (CN8).

Signal Name	Pin No.	Function	
/HWBB1+	4	Hard wire baseblock input 1	For hard wire baseblock input. Baseblock (motor current off) when OFF.
/HWBB1-	3		
/HWBB2+	6	Hard wire baseblock input 2	
/HWBB2-	5		
EDM1+	8	Monitored circuit status output 1	ON when the /HWBB1 and the /HWBB2 signals are input and the DRIVER enters a baseblock state.
EDM1-	7		
–	1*	–	
–	2*	–	

∗ Do not use pins 1 and 2 because they are connected to the internal circuits.

3.2.3 Example of I/O Signal Connections

The following diagram shows a typical connection example.

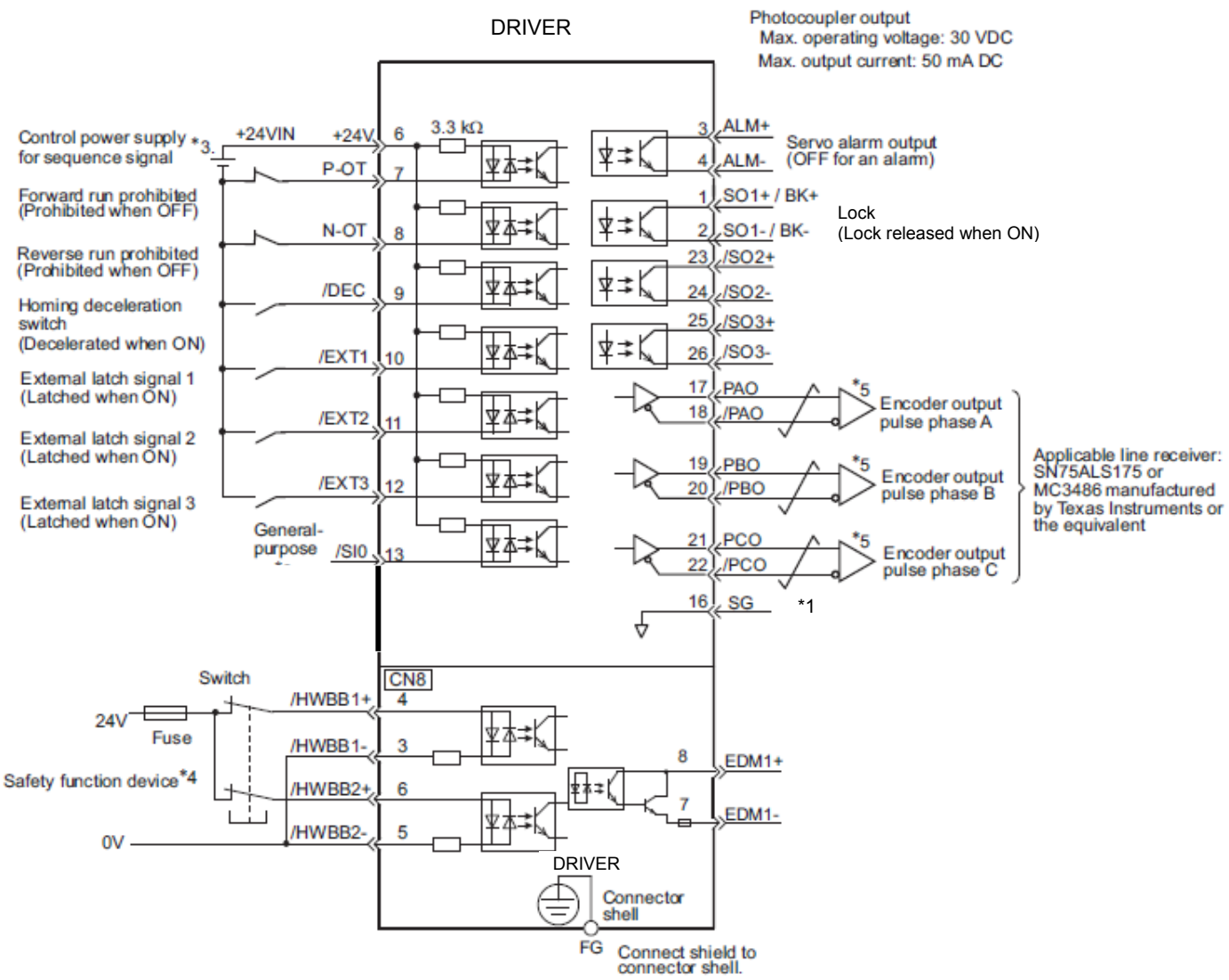

∗1. represents twisted-pair wires.

∗3. The 24-VDC power supply is not included. Use a 24-VDC power supply with double insulation or reinforced insulation.

∗4. When using the safety function, a safety function device must be connected and the wiring that is necessary to activate the safety function must be done to turn ON the servomotor power. When not using the safety function, use the DRIVER with the Safety Jumper Connector (provided as an accessory) inserted into the CN8.

∗5. Always use line receivers to receive the output signals.

Note: The functions allocated to the input signals /DEC, P-OT, N-OT, /EXT1, /EXT2, and /EXT3 and the output signals /SO1, /SO2, and /SO3 can be changed by using the parameters. Refer to *3.3.1 Input Signal Allocations* and *3.3.2 Output Signal Allocations*.

3.3 I/O Signal Allocations

This section describes the I/O signal allocations.

3.3.1 Input Signal Allocations

IMPORTANT

- Inverting the polarity of the forward run prohibited and reverse run prohibited signals from the factory setting will prevent the overtravel function from working in case of signal line disconnections or other failures.
  If this setting is absolutely necessary, check the operation and confirm that there are no safety problems.
- When two or more signals are allocated to the same input circuit, input signal level is valid for all allocated signals, resulting in an unexpected machine operation.

Input signals are allocated as shown in the following table.

Refer to the *Interpreting the Input Signal Allocation Tables* and change the allocations accordingly.

<Interpreting the Input Signal Allocation Tables>

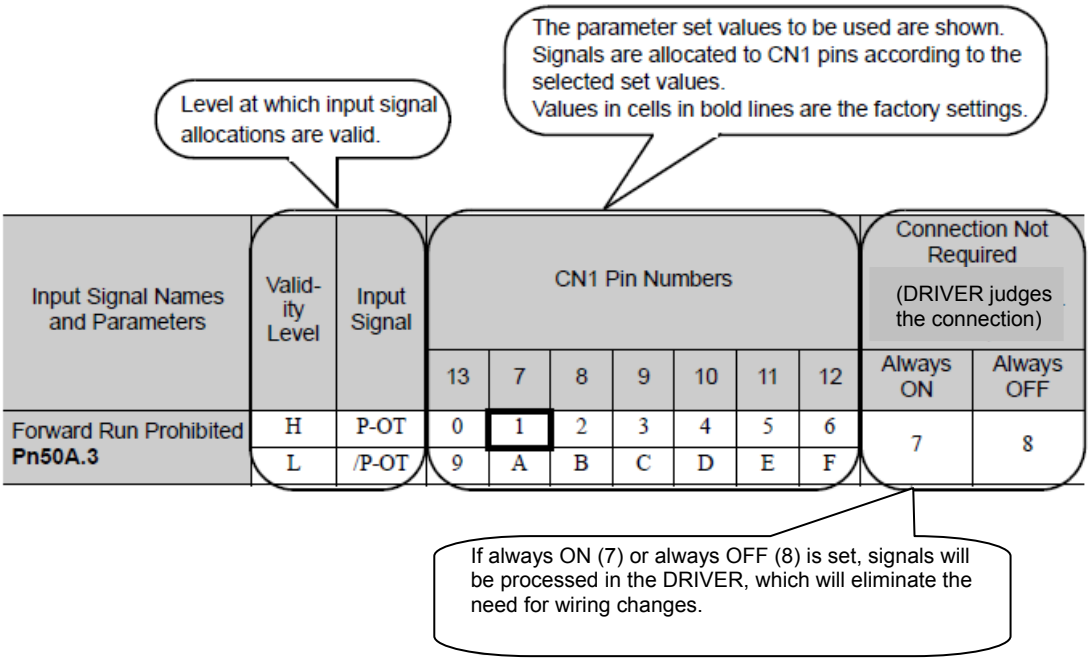

Input Signal Names and Parameters	Validity Level	Input Signal	CN1 Pin Numbers							Connection Not Required (DRIVER judges the connection)	
			13	7	8	9	10	11	12	Always ON	Always OFF
Forward Run Prohibited **Pn50A.3**	H	P-OT	0	**1**	2	3	4	5	6	7	8
	L	/P-OT	9	A	B	C	D	E	F		

Input Signal Names and Parameters	Validity Level	Input Signal	CN1 Pin Numbers							Connection Not Required (DRIVER judges the connection)	
			13	7	8	9	10	11	12	Always ON	Always OFF
Forward Run Prohibited **Pn50A.3**	H	P-OT	0	1	2	3	4	5	6	7	8
	L	/P-OT	9	A	B	C	D	E	F		
Reverse Run Prohibited **Pn50B.0**	H	N-OT	0	1	2	3	4	5	6	7	8
	L	/N-OT	0	A	B	C	D	E	F		
Forward External Torque Limit **Pn50B.2**	L	/P-CL	0	1	2	3	4	5	6	7	8
	H	P-CL	9	A	B	C	D	E	F		
Reserve External Torque Limit **Pn50B.3**	L	/N-CL	0	1	2	3	4	5	6	7	8
	H	N-CL	9	A	B	C	D	E	F		
Homing Deceleration LS **Pn511.0**	L	/DEC	0	1	2	3	4	5	6	7	8
	H	DEC	9	A	B	C	D	E	F		
External Latch Signal 1 **Pn511.1**	L	EXT1	*	*	*	*	4	5	6	7	8
	H	/EXT1	*	*	*	*	D	E	F		
External Latch Signal 2 **Pn511.2**	L	EXT2	*	*	*	*	4	5	6	7	8
	H	/EXT2	*	*	*	*	D	E	F		
External Latch Signal 3 **Pn511.3**	L	EXT3	*	*	*	*	4	5	6	7	8
	H	/EXT3	*	*	*	*	D	E	F		

∗ Always set to "Invalid."

3.3.2 Output Signal Allocations

IMPORTANT

- The signals not detected are considered as "Invalid." For example, Positioning Completion (/COIN) signal in speed control is "Invalid."
- Inverting the polarity of the lock signal (/BK), i.e. positive logic, will prevent the holding lock from working in case of its signal line disconnection.
  If this setting is absolutely necessary, check the operation and confirm that there are no safety problems.
- When two or more signals are allocated to the same output circuit, a signal is output with OR logic circuit.

Output signals are allocated as shown in the following table.

Refer to the *Interpreting the Output Signal Allocation Tables* and change the allocations accordingly.

<Interpreting the Output Signal Allocation Tables>

The parameter set values to be used are shown.
Signals are allocated to CN1 pins according to the selected set values.
Values in cells in bold lines are the factory settings.

Output Signal Names and Parameters	Output Signal	CN1 Pin Numbers			Invalid (not use)
		1/ (2)	23/ (24)	25/ (26)	
Lock **Pn50F.2**	/BK	1	2	3	0

Output Signal Names and Parameters	Output Signal	CN1 Pin Numbers			Invalid (not use)
		1/ (2)	23/ (24)	25/ (26)	
Positioning Completion **Pn50E.0**	/COIN	1	2	3	0
Speed Coincidence Detection **Pn50E.1**	/V-CMP	1	2	3	0
Rotation Detection **Pn50E.2**	/TGON	1	2	3	0
Servo Ready **Pn50E.3**	/S-RDY	1	2	3	0
Torque Limit Detection **Pn50F.0**	/CLT	1	2	3	0
Speed Limit Detection **Pn50F.1**	/VLT	1	2	3	0
Brake **Pn50F.2**	/BK	1	2	3	0
Warning **Pn50F.3**	/WARN	1	2	3	0
Near **Pn510.0**	/NEAR	1	2	3	0
Pn512.0=1	Polarity inversion of CN1-1(2)				0 (Not invert at factory setting)
Pn512.1=1	Polarity inversion of CN1-23(24)				
Pn512.2=1	Polarity inversion of CN1-25(26)				

3.4 Examples of Connection to PC or PLC...etc

This section shows examples of DRIVER I/O signal connection to the PC or PLC...etc.

3.4.1 Sequence Input Circuit

(1) Photocoupler Input Circuit

CN1 connector terminals 6 to 13 are explained below.

The sequence input circuit interface is connected through a relay or open-collector transistor circuit. When connecting through a relay, use a low-current relay. If a low-current relay is not used, a faulty contact may result.

Relay Circuit Example	Open-collector Circuit Example
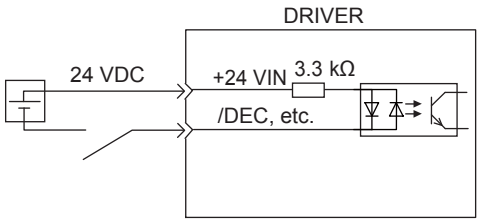	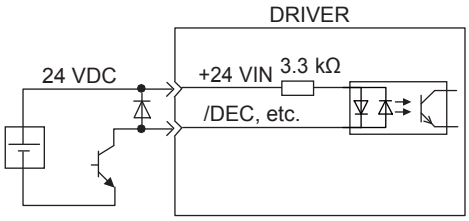

Note: The 24 VDC external power supply capacity must be 50 mA minimum.

The DRIVER's input circuit uses bidirectional photocoupler. Select either the sink circuit or the source circuit according to the specifications required for each machine.

Note: - The connection example in *3.2.3* shows sink circuits.
- The ON/OFF polarity differs between when a sink circuit is connected and when a source circuit is connected.

Sink Circuit	Source Circuit
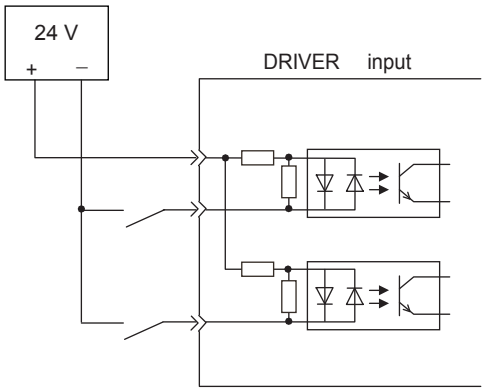	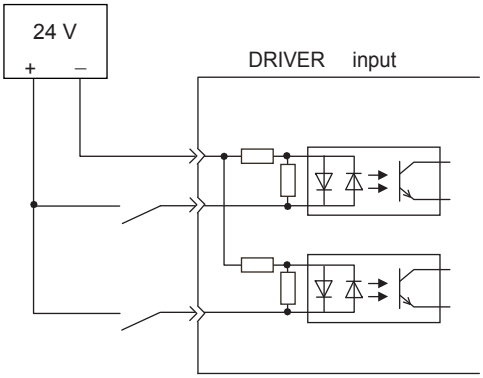

Input Signal Polarities				Input Signal Polarities			
Signal	Level	Voltage Level	Contact	Signal	Level	Voltage Level	Contact
ON	Low (L) level	0 V	Close	ON	High (H) level	24 V	Close
OFF	High (H) level	24 V	Open	OFF	Low (L) level	0 V	Open

(2) Safety Input Circuit

As for wiring input signals for safety function, input signals make common 0 V. It is necessary to make an input signal redundant.

Input Signal Connection Example

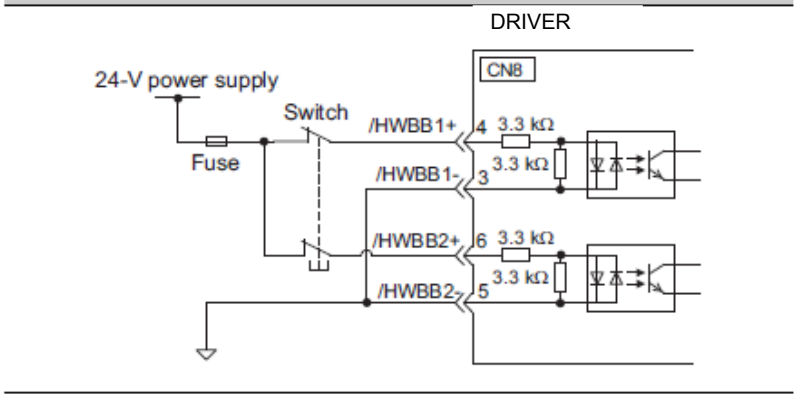

3.4.2 Sequence Output Circuit

Three types of DRIVER output circuit are available.

IMPORTANT	Incorrect wiring or incorrect voltage application to the output circuit may cause short-circuit. If a short-circuit occurs as a result of any of these causes, the holding lock will not work. This could damage the machine or cause an accident resulting in death or injury.

(1) Photocoupler Output Circuit

Photocoupler output circuits are used for servo alarm (ALM), servo ready (/S-RDY), and other sequence output signal circuits. Connect a photocoupler output circuit through a relay or line receiver circuit.

Relay Circuit Example	Line Receiver Circuit Example
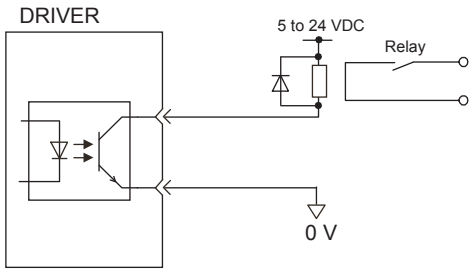	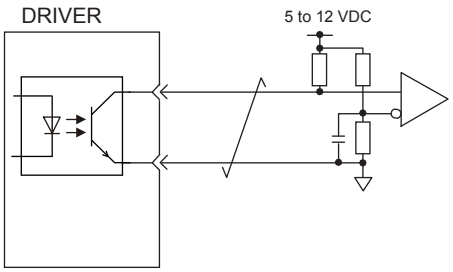

Note: The maximum allowable voltage and the allowable range of current capacity for photocoupler output circuits are as follows.
- Voltage: 30 VDC
- Current: 5 to 50 mA DC

(2) Line Driver Output Circuit

CN1 connector terminals, 17-18 (phase-A signal), 19-20 (phase-B signal), and 21-22 (phase-C signal) are explained below.

These terminals output the following signals via the line-driver output circuits.

- Output signals for which encoder serial data is converted as two phases pulses (PAO, /PAO, PBO, /PBO)
- Origin pulse signals (PCO, /PCO)

Connect the line-driver output circuit through a line receiver circuit at the PC or PLC...etc.

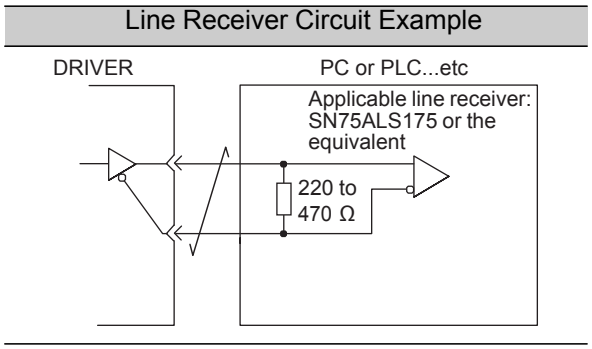

(3) Safety Output Circuit

The external device monitor (EDM1) for safety output signals is explained below.
A configuration example for the EDM1 output signal is shown in the following diagram.
Output signal is the source output. It is not able to use the sink output.

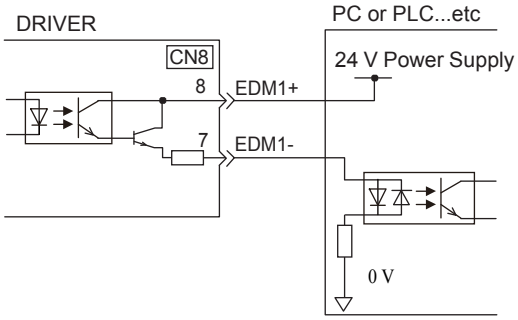

- Specifications

Type	Signal Name	Pin No.	Output Status	Meaning
Output	EDM1	CN8-8 CN8-7	ON	Both the /HWBB1 and /HWBB2 signals are working normally.
			OFF	The /HWBB1 signal, the /HWBB2 signal, or both are not working normally.

Electrical characteristics of EDM1 signal are as follows.

Items	Characteristic	Remarks
Maximum Allowable Voltage	30 VDC	–
Maximum Current	50 mADC	–
Maximum Voltage Drop at ON	1.0 V	Voltage between EDM1+ to EDM1- at current is 50 mA.
Maximum Delay Time	20 ms	Time from the change in /HWBB1 or /HWBB2 until the change in EDM1.

3.5 Wiring MECHATROLINK-III Communications

The following diagram shows an example of connections between a PC or PLC...etc and a DRIVER using MECHATROLINK-III communications cables (CN6A, CN6B).

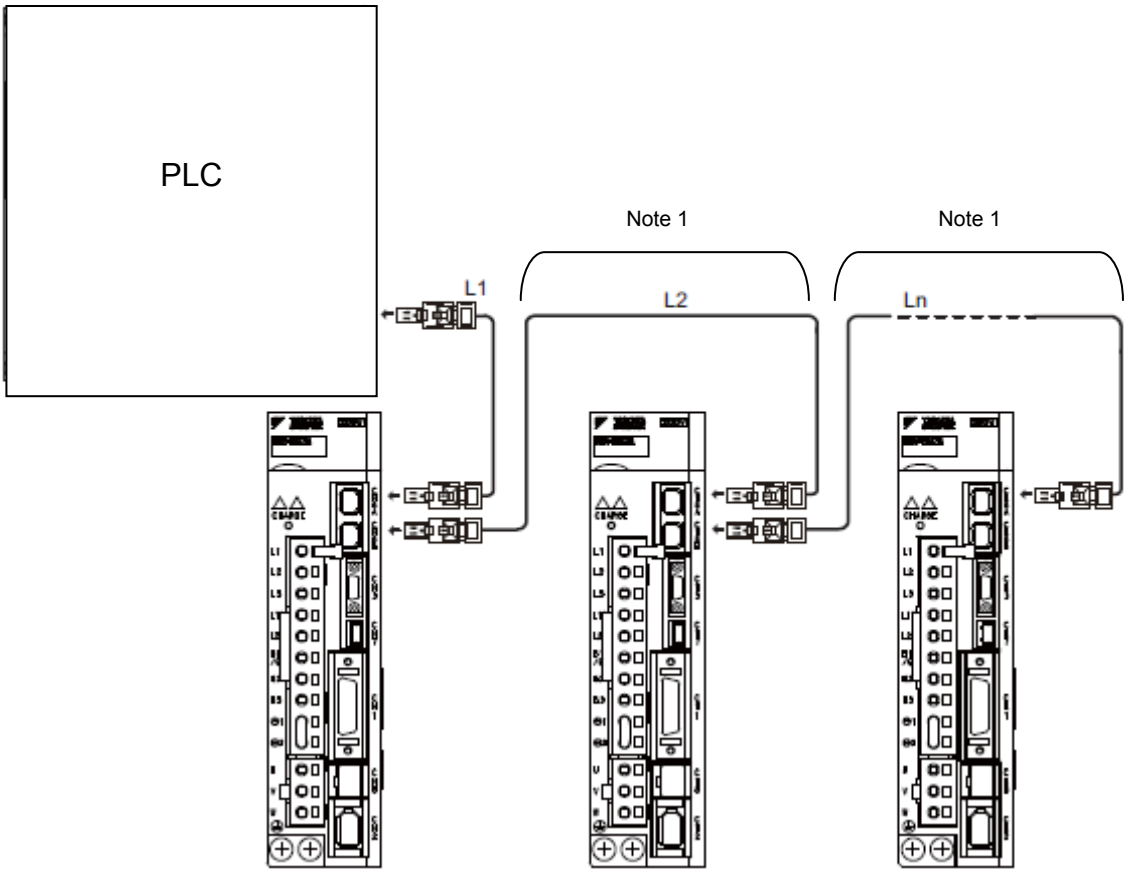

Note 1. The length of the cable between stations (L1, L2 ... Ln) must be 75 m maximum.

For removing the MECHATROLINK-III communications cable connectors from the DRIVER, refer to the following procedure.
Slide the lock injector of the connector to the DRIVER side to unlock and remove the MECHATROLINK-III communications cable connectors.

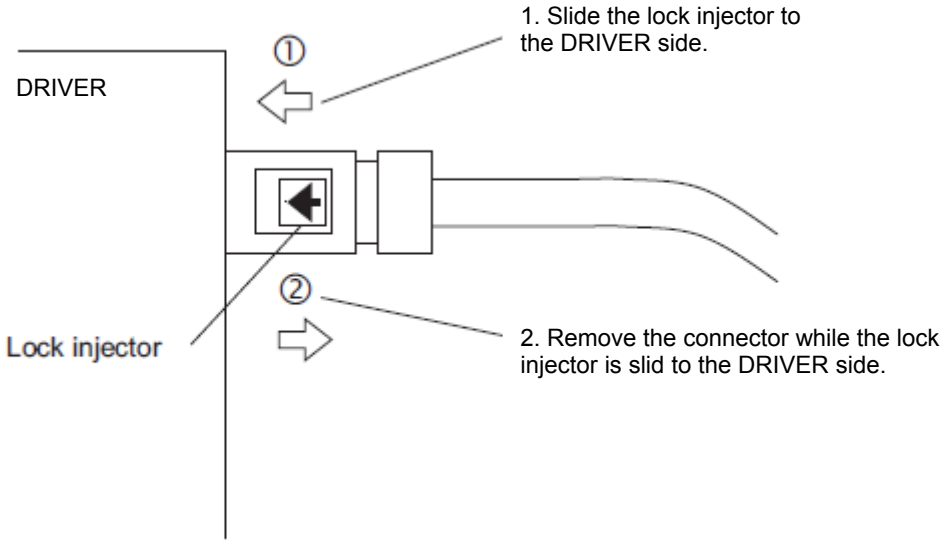

Note: The MECHATROLINK-III communications cable connector may be damaged if it is removed without being unlocking.

3.6 Encoder Connection

This section describes the encoder signal (CN2) names, functions, and connection examples.

3.6.1 Encoder Signal (CN2) Names and Functions

The following table shows the names and functions of encoder signals (CN2).

Signal Name	Pin No.	Function
PG 5 V	1	Encoder power supply +5 V
PG 0 V	2	Encoder power supply 0 V
BAT (+)	3	Battery (+)
BAT (-)	4	Battery (-)
PS	5	Serial data (+)
/PS	6	Serial data (-)
Shield	Shell	–

3.6.2 Encoder Connection Examples

The following diagrams show connection examples of the encoder, the DRIVER, and the PC or PLC...etc.

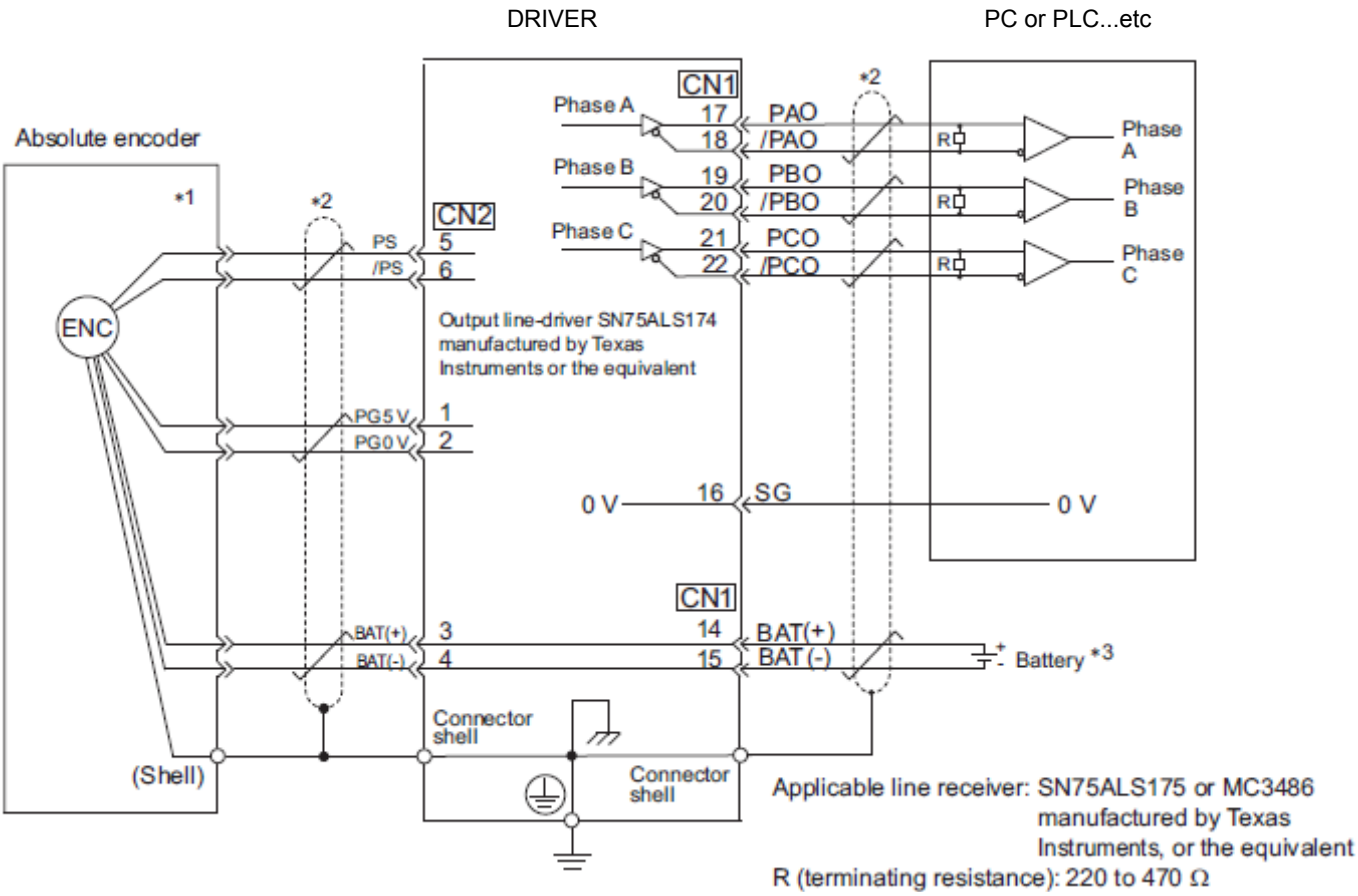

∗1. The pin arrangement for wiring connectors varies in accordance with the servomotor that is used.

∗2. 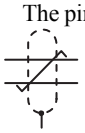 : represents shielded twisted-pair wires.

∗3. Do not connect the battery with 14 and 15 pins (CN1).

3.7 Connecting Regenerative resistors

If the built-in regenerative resistor is insufficient, connect an external regenerative resistor by one of the following methods and set the regenerative resistors capacity (Pn600). Precautions on selecting a regenerative resistor and its specifications are shown below.

⚠ WARNING

- Be sure to connect the regenerative resistor correctly. Do not short-circuit between B1/ ⊕and B2.
  Doing so may result in fire or damage to the regenerative resistor or DRIVER.

- Regenerative resistors Selection

Select regenerative resistors in the following manner. External regenerative resistors are to be provided by users.

Voltage	DRIVER Model LECYU2-□□	Built-in Regenerative Resistor	Necessity of External Regenerative resistors	Necessity of External Regenerative resistors
Three-phase 200 V	V5, V7, V8	None	Basically Not Required	No built-in regenerative resistor is provided. Install external Regenerative resistors when the smoothing capacitor in DRIVER cannot process all the regenerative power.
	V9	Standard Equipment *		A built-in regenerative resistor is provided as standard. Install external regenerative resistors when the built-in regenerative resistor cannot process all the regenerative power.

* For specifications of built-in regenerative resistors, refer to the next.

- Specifications of Built-in Regenerative Resistor

The following table shows the specifications of the DRIVER's built-in resistor and the amount of regenerative power (average values) that it can process.

Applicable DRIVER LECYU2-□□		Specifications of Built-in Resistor		Regenerative Power Processed by Built-in Resistor [W] *	Minimum Allowable Resistance [Ω]
		Resistance [Ω]	Capacity [W]		
Three-phase 200 V	V5, V7, V8	-	-	-	40
	V9	50	40	8	40

*1: The average regenerative power that can be handled is 20% of the rated capacity of the regenerative resistor built into the DRIVER.

3.7.1 Connecting Regenerative Resistors

The following instructions show how to connect the regenerative resistors and DRIVERs.

(1) DRIVERs: Model LECYU2-V5, V7, V8

Connect an external regenerative resistors between the B1/⊕ and B2 terminals on the DRIVER. After connecting a option, select the capacity. For more information on how to set the capacity of regenerative resistors, refer to *3.7.2 Setting Regenerative resistors Capacity*.

Enlarged View

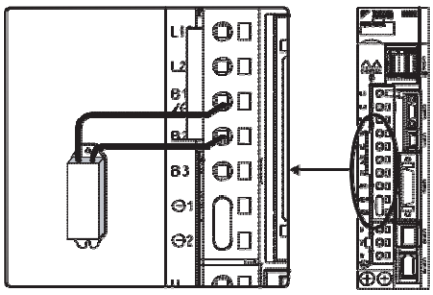

(2) DRIVER: Model LECYU2-V9

Disconnect the wiring between the DRIVER's B2 and B3 terminals and connect an external regenerative resistors between the B1/⊕ and B2 terminals. After connecting the option, select the capacity. For more information on how to set the capacity of regenerative resistors, refer to *3.7.2 Setting Regenerative resistors Capac ity*.

Note: Be sure to take out the lead wire between the B2 and B3 terminals.

Enlarged View

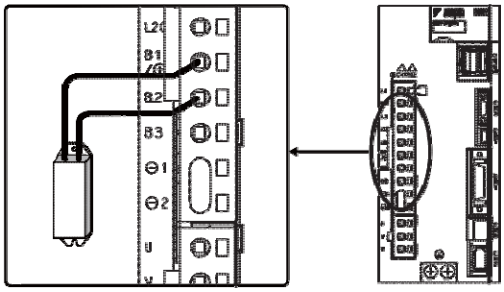

3.7.2 Setting Regenerative resistors Capacity

When using an external regenerative resistors, set the Pn600 so that the regenerative resistors capacity is equivalent to the resistor capacity.

⚠ WARNING

- If parameter Pn600 is set to 0 while an external regenerative resistors is connected, the regenerative overload alarm (A.320) may not be detected. If the regenerative overload alarm (A.320) is not detected correctly, the external regenerative resistors may be damaged and an injury or fire may result.

Pn600	Regenerative resistors Capacity Speed Position Torque				Classification
	Setting Range	Unit	Factory Setting	When Enabled	
	0 to DRIVER capacity	10 W	0	Immediately	Setup

Be sure to set the regenerative resistors capacity (Pn600) to a value that is in accordance with the allowable capacity of the actual external regenerative resistors being used.

The setting will vary with the cooling method of external regenerative resistors:

· For natural convection cooling: Set the value to a maximum 20% of the actually installed regenerative option capacity (W).

• For forced convection cooling: Set the value to a maximum 50% of the actually installed regenerative option capacity (W).

Example: Set 20 W (100 W × 20%) for the 100-W external regenerative resistors with natural convection cooling method: Pn600 = 2 (unit: 10 W)

Note 1. If Pn600 is not set to the optimum value, alarm A.320 will occur.
2. When set to the factory setting (Pn600 = 0), the DRIVER's built-in option has been used.

IMPORTANT

- When the external regenerative resistors for power are used at the rated load ratio, the resistor temperature increases to between 200 °C and 300 °C. The resistors must be used at or below the rated values. Check with the manufacturer for the resistor's load characteristics.
- For safety, use the external regenerative resistors with thermoswitches.

3.8 Noise Control and Measures for Harmonic Suppression

This section describes the wiring for noise control and the DC reactor for harmonic suppression.

3.8.1 Wiring for Noise Control

IMPORTANT

- Because the DRIVER is designed as an industrial device, it provides no mechanism to prevent noise interference.
- The DRIVER uses high-speed switching elements in the main circuit. Therefore peripheral devices may receive switching noise. If the equipment is to be used near private houses or if radio interference is a problem, take countermeasures against noise.
- If installation conditions by the EMC directive must be met, refer to 3.8.3 *EMC Installation Conditions*.

The DRIVER uses microprocessors. Therefore it may receive switching noise from peripheral devices.

To prevent the noise from the DRIVER or the peripheral devices from causing a malfunction of any one of these devices, take the following precautions against noise as required.

- Position the input reference device and noise filter as close to the DRIVER as possible.
- Always install a surge absorber in the relay, solenoid and electromagnetic contactor coils.
- Do not bundle or run the main circuit cables together with the I/O signal cables or the encoder cables in the same duct. Keep the main circuit cables separated from the I/O signal cables and the encoder cables with a gap of at least 30 cm.
- Do not share the power supply with an electric welder or electrical discharge machine. When the DRIVER is placed near a high-frequency generator, install a noise filter on the input side of the main circuit power supply cables and control power supply cables. As for the wiring of noise filter, refer to *(1) Noise Filter* shown below.
- Take the grounding measures correctly. As for the grounding, refer to *(2) Correct Grounding.*

(1) Noise Filter

The DRIVER has a built-in microprocessor (CPU), so protect it from external noise as much as possible by installing a noise filter in the appropriate place.

The following is an example of wiring for noise control.

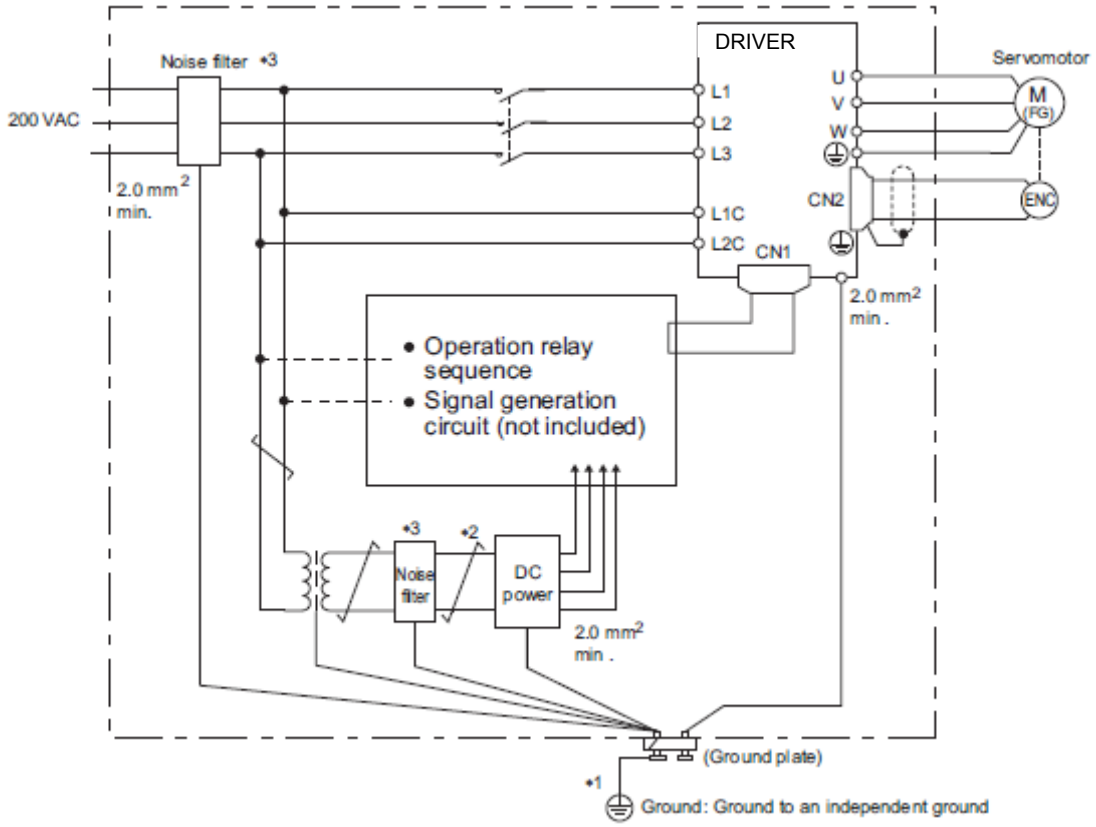

∗1. For ground wires connected to the ground plate, use a thick wire with a thickness of at least 2.0 mm^2 (preferably, plain stitch cooper wire).

∗2. ⊿ should be twisted-pair wires.

∗3. When using a noise filter, follow the precautions in *3.8.2 Precautions on Connecting Noise Filter*.

(2) Correct Grounding

Take the following grounding measures to prevent the malfunction due to noise.

- Grounding the Motor Frame

Always connect servomotor frame terminal FG to the DRIVER ground terminal ⏚ . Also be sure to ground the ground terminal ⏚.

If the servomotor is grounded via the machine, a switching noise current will flow from the DRIVER main circuit through servomotor stray capacitance. The above grounding is required to prevent the adverse effects of switching noise.

- Noise on the I/O Signal Cable

If the I/O signal cable receives noise, ground the 0 V line (SG) of the I/O signal cable. If the motor cable is accommodated in a metal conduit, ground the conduit and its junction box. For all grounding, ground at one point only.

3.8.2 Precautions on Connecting Noise Filter

This section describes the precautions on installing a noise filter.

(1) Noise Filter Brake Power Supply

Use the following noise filter at the brake power input for 400-W or less servomotors with holding locks.
MODEL: FN2070-6/07 (Manufactured by SCHAFFNER Electronic.)

(2) Precautions on Using Noise Filters

Always observe the following installation and wiring instructions.

IMPORTANT	Some noise filters have large leakage currents. The grounding measures taken also affects the extent of the leakage current. If necessary, select an appropriate leakage current detector or leakage current breaker taking into account the grounding measures that are used and leakage current from the noise filter. Contact the manufacturer of the noise filter for details.

Do not put the input and output lines in the same duct or bundle them together.

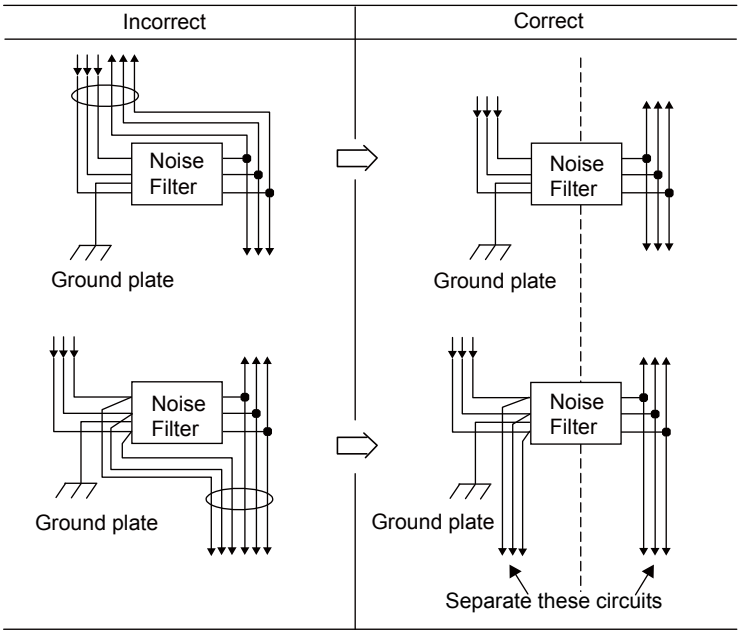

Separate the noise filter ground wire from the output lines.
Do not accommodate the noise filter ground wire, output lines and other signal lines in the same duct or bundle them together.

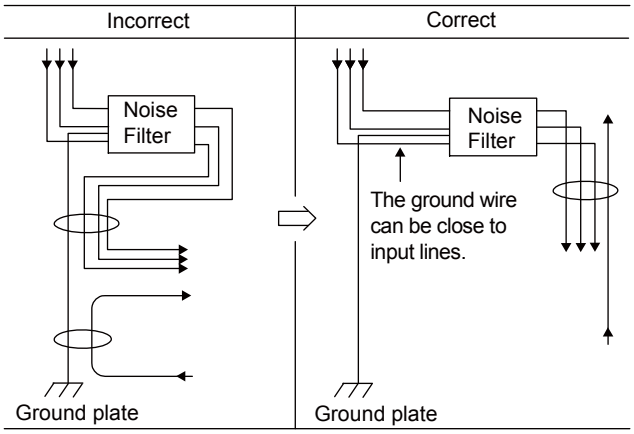

Connect the noise filter ground wire directly to the ground plate. Do not connect the noise filter ground wire to other ground wires.

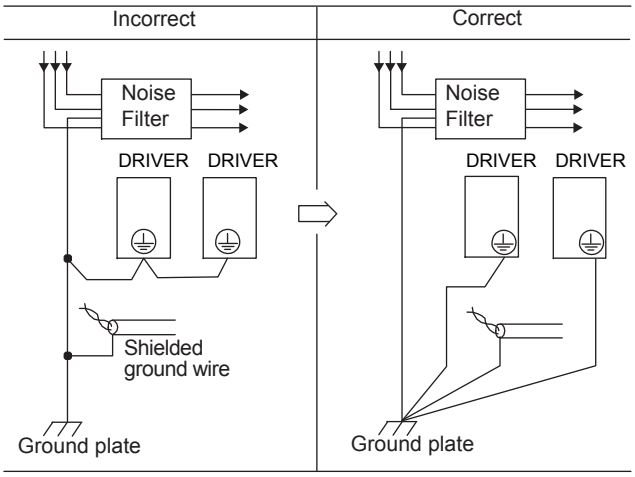

If a noise filter is located inside a control panel, first connect the noise filter ground wire and the ground wires from other devices inside the control panel to the ground plate for the control panel, then ground the plates.

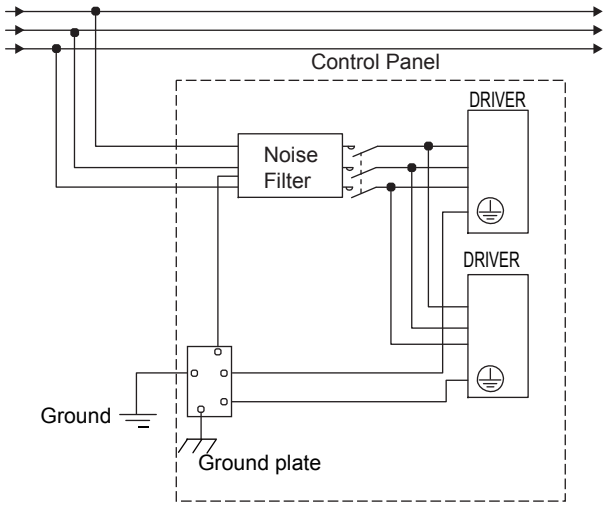

3.8.3 EMC Installation Conditions

This section describes the recommended installation conditions that satisfy EMC guidelines for each model of the DRIVER.

This section describes the EMC installation conditions. The actual EMC level may differ depending on the actual system's configuration, wiring, and other conditions. However, because this product is built-in, check that the following conditions are still met after being installed in the user's product.

The applicable standards are EN55011/A2 group 1 class A, EN61800-3, and EN61000-6-2.

(1) Three-phase 200V (LECYU2-V5, V7, V8)

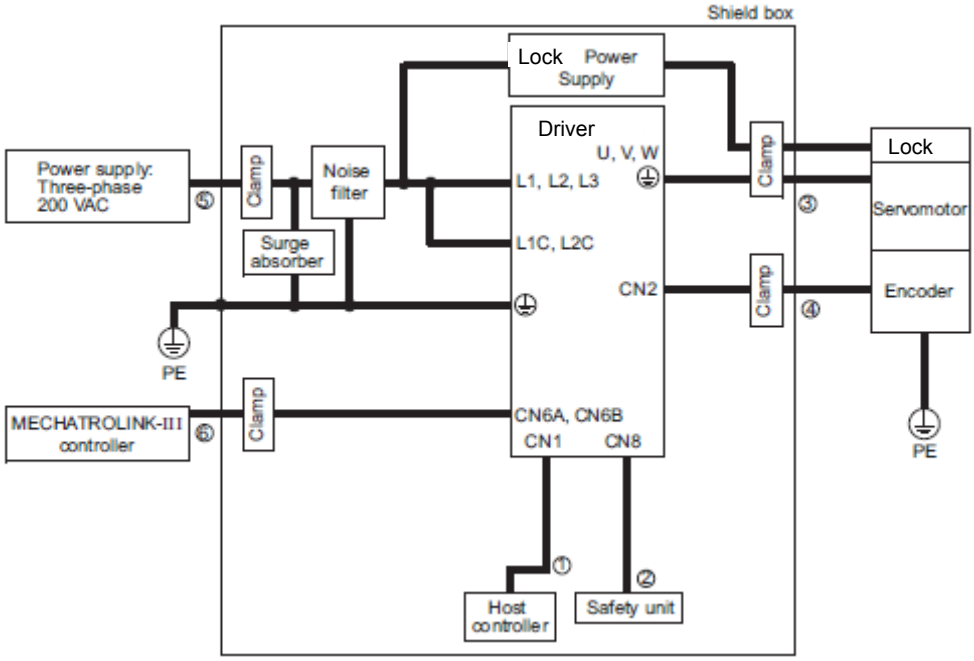

Symbol	Cable Name	Specification
①	I/O signal cable	Shield cable
②	Safety signal cable	Shield cable
③	Motor cable	Shield cable
④	Encoder cable	Shield cable
⑤	Main circuit cable	Shield cable
⑥	MECHATROLINK-III communication cable	Shield cable

(2) Three-phase 200V (LECYU2-V9)

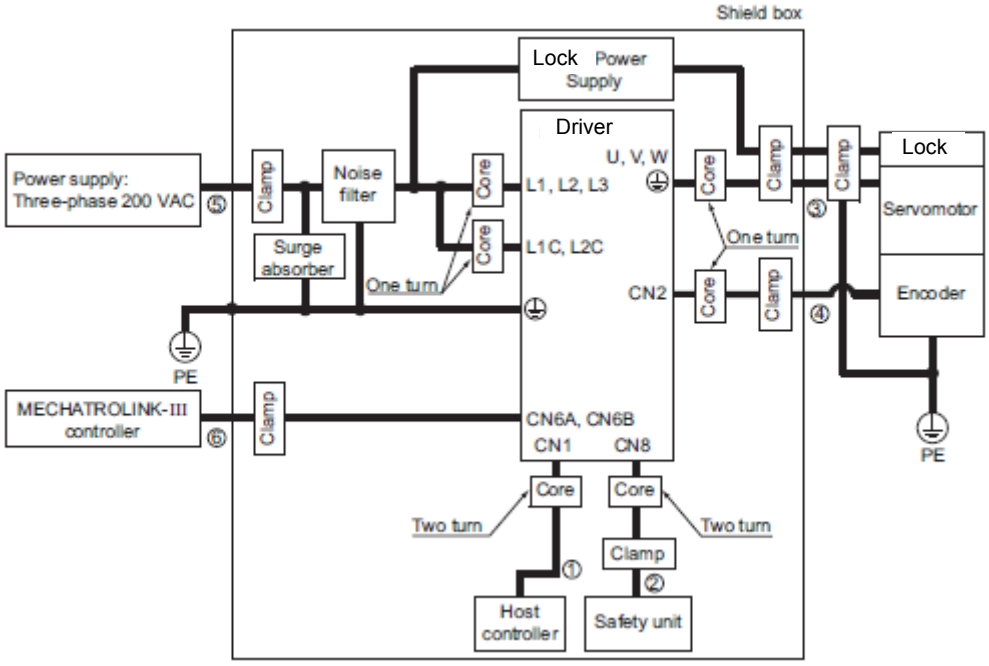

Symbol	Cable Name	Specification
①	I/O signal cable	Shield cable
②	Safety signal cable	Shield cable
③	Motor cable	Shield cable
④	Encoder cable	Shield cable
⑤	Main circuit cable	Shield cable
⑥	MECHATROLINK-III communication cable	Shield cable

(3) Other Precautions

- Attachment Methods of Ferrite Cores

One turn	Two turn
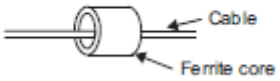	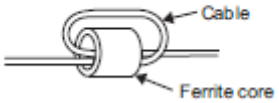

- Recommended Ferrite Core

Cable Name	Ferrite Core Model	Manufacturer
Motor cable	ESD-SR-250	NEC TOKIN Corp.

- Recommended Noise Filter

Noise Filter Selection

Main Circuit Power Supply	Driver Model LECYU2-	Recommended Noise Filter			Details
		Model	Specifications	Leakage Current	
Single-phase 200 V	V5, V7	FN2070-6/07	Single-phase 250V 6A	0.734 mA 230VAC/50Hz	[1]
	V8	FN2070-10/07	Single-phase 250V 10A		
	V9	FN2070-16/07	Single-phase 250V 16A		
Three-phase 200 V	V5, V7, V8	FN258L-7/07	Three-phase 80V 7A	0.5 mA 440VAC/50Hz	[2]
	V9	FN258L-16/07	Three-phase 480V 16A	0.8 mA 440VAC/50Hz	

Note: RoHS-compliant models are not available. Contact the manufactures when in need of a RoHS-compliant model.

IMPORTANT

Some noise filters have large amounts of leakage current. The grounding measures taken also affect the extent of the leakage current. If necessary, select an appropriate current detector or leakage current breaker taking into account the grounding measures that are used and leakage current from the noise filter. Contact the manufacturer of the noise filter for details.

External Dimensions (Units: mm)

[1] FN Type (by Schaffner EMC, Inc.)

Model	FN2070-6/07
Dimensional Drawings	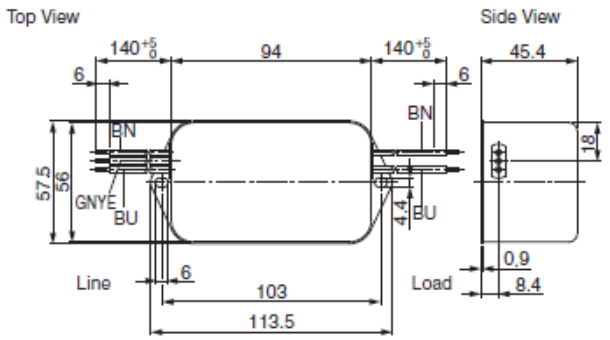

Model	FN2070-10/07
Dimensional Drawings	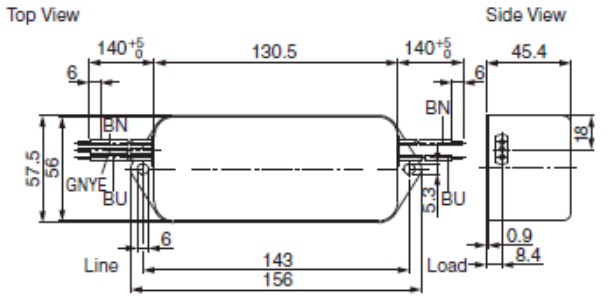

Model	FN2070-16/07
Dimensional Drawings	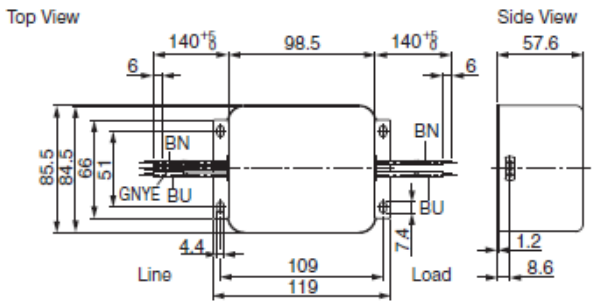

Cable Color	Terminal	
	Line	Load
Brown (BN)	P	P'
Blue (BU)	N	N'
Green/yellow (GNYE)	E	–

[2] FN Type

Model		FN Type [by Schaffner EMC, Inc.]	
		FN258L-7/07	FN258L-16/07
Dimensional Drawings		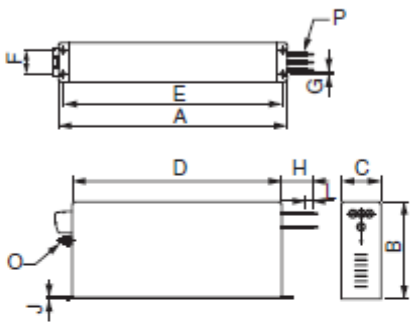	
External Dimensions	Code	Dimensions	
	A	255±1	305±1
	B	126±0.8	142±0.8
	C	50±0.6	55±0.6
	D	225±0.8	275±0.8
	E	240±0.5	290±0.5
	F	25±0.3	30±0.3
	G	6.5±0.2	
	H	300±10	
	J	1±0.1	
	K	–	
	L	9±1	
	M	–	
	N	–	
	O	M5	
	P	AWG16	AWG14
	Q	–	

- Recommended Surge Absorber

The surge absorber (for Lightning surge) absorbs lightning surge and prevents faulty operation in or damage to electronic circuits.

Main Circuit Power Supply	Recommended Surge Absorber
Single-phase 200V	LT-C12G801WS [by SOSHIN ELECTRIC CO., LTD.]
Three-phase 200V	LT-C32G801WS [by SOSHIN ELECTRIC CO., LTD.]

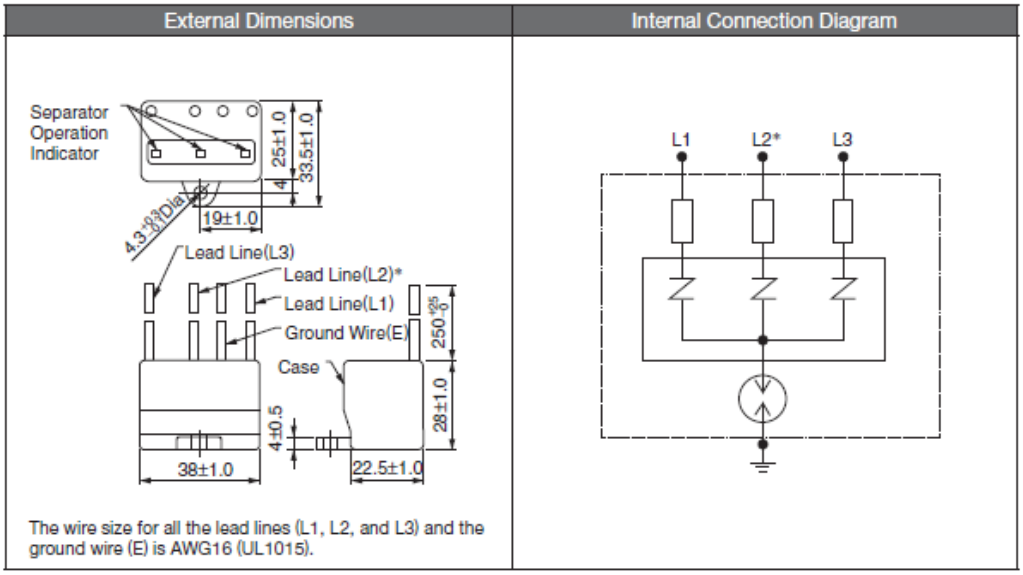

*: No L2 is on the LT-C12G801WS surge absorber.

- Fixing the Cable

Fix and ground the cable shield using a piece of conductive metal.

• Example of Cable Clamp

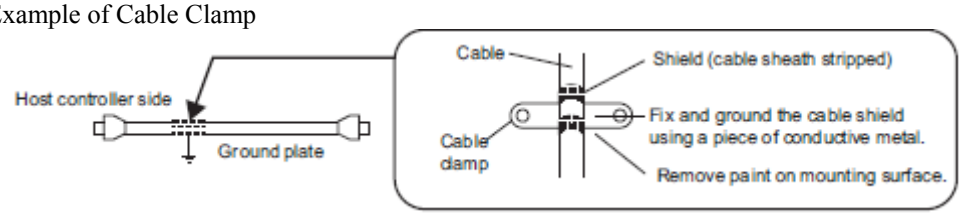

- Shield Box

A shield box, which is a closed metallic enclosure, is effective as reinforced shielding against electromagnetic interference (EMI) from DRIVERs. The structure of the box should allow the main body, door, and cooling unit to be attached to the ground.

The box opening should be as small as possible.

<Note>

Do not connect the the analog monitor cable to the DRIVER during operations. Connect them only when the machinery is stopped during maintenance.

3.9 Specification of option cables

- Cables for CN1 CN6 CN7 CN8 (MECHATROLINK-III Communications Reference DRIVERs)

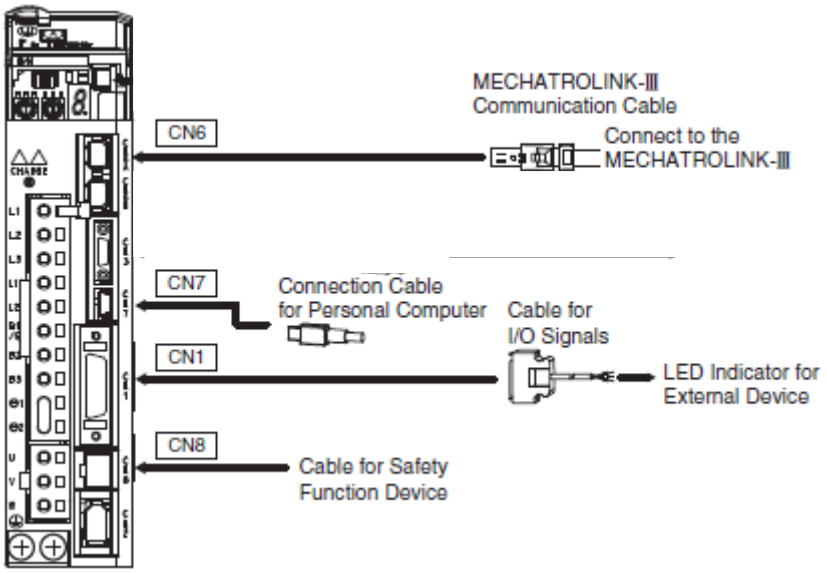

Name		Length	Order No.	Specifications	Details
CN1 Cables for I/O Signals	Connector Kit		LE-CYNA	Soldered 	(1)
CN7 Connection Cables for Personal Computer		2.5m	LEC-JZ-CVUSB	Cable with Connectors at Both Ends 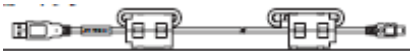	(2)
CN6A CN6B MECHATROLINK-III Communication Cable	Cables with Connectors at Both Ends	0.2m ～ 3.0m	LEC-CYU-□		(3)
CN8 Cable for Safety Function Device	Cables with Connector*1	3m	LEC-JZ-CVSAF	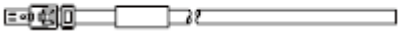	(4)

*1 : When using the safety function, connect this cable to the safety devices.
Even when not using the safety function, use DRIVERs with the Safe Jumper Connector connected.

(1) Connector Kit for CN1

Use the following connector and cable to assemble the cable.
The CN1 connector kit includes one case and one connector.

Connector Kit Model	Case		Connector	
	Model	Qty	Model	Qty
LE-CSNA	10326-52A0-008*	1 set	10126-3000PE* (Soldered)	1

* : Manufactured by Sumitomo 3M Ltd.

Cable Size

Item	Specifications
Cable	Use twisted-pair or twisted-pair shielded wire.
Applicable Wires	AWG24, 26, 28, 30
Cable Finished Diameter	16 dia. max.

· External Dimensions of Case (Units: mm)

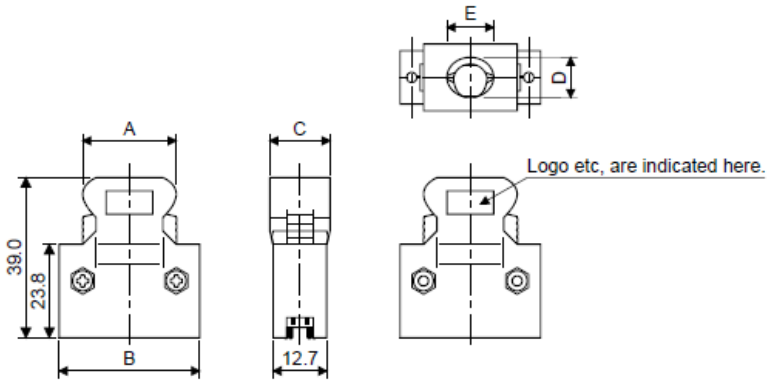

Each type of dimension				
A	B	C	D	E
25.8	37.2	14.0	10.0	12.0

· External Dimensions of Connector (Units: mm)

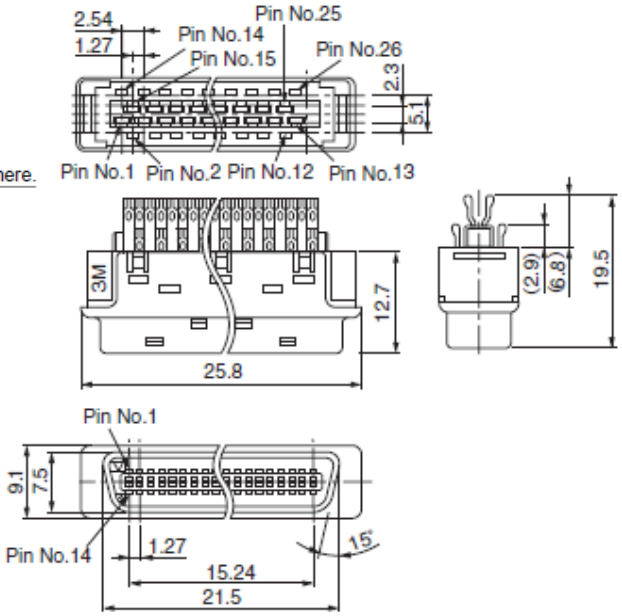

(2) Connection Cable for Personal Computer for CN7
(Model: LEC-JZ-CVUSB)
- External Dimensions (Units: mm)

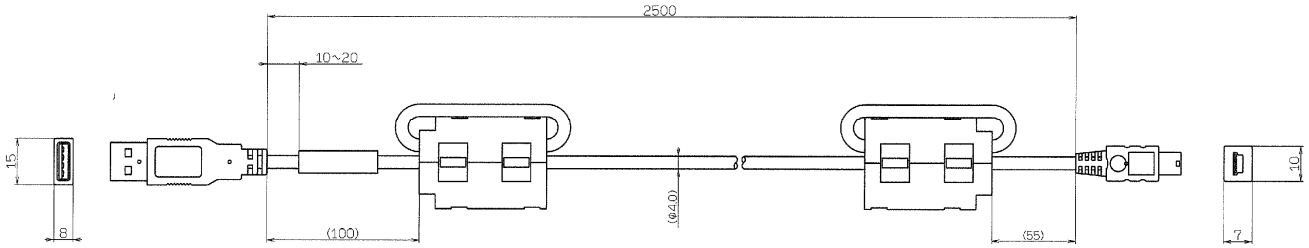

IMPORTANT

Use a cable specified by this company.
When using other cables, operation cannot be guaranteed.

(3) Cable with Connectors at Both Ends for CN6
(Model: LEC-CYU-□)
- External Dimensions (Units: mm)

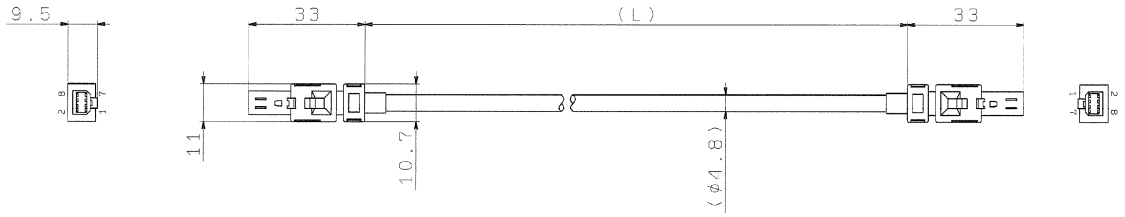

Model	Cable Length (L)
LEC-CYU-L	0.2m
LEC-CYU-J	0.5m
LEC-CYU-1	1m
LEC-CYU-3	3m

IMPORTANT

Use a MECHATROLINK-III communications cable specified by this company. When using other cables, noise resistance may be reduced, and operation cannot be guaranteed.

(4) Cable with Connector for CN8
(Model: LEC-JZ-CVSAF)
- External Dimensions (Units: mm)

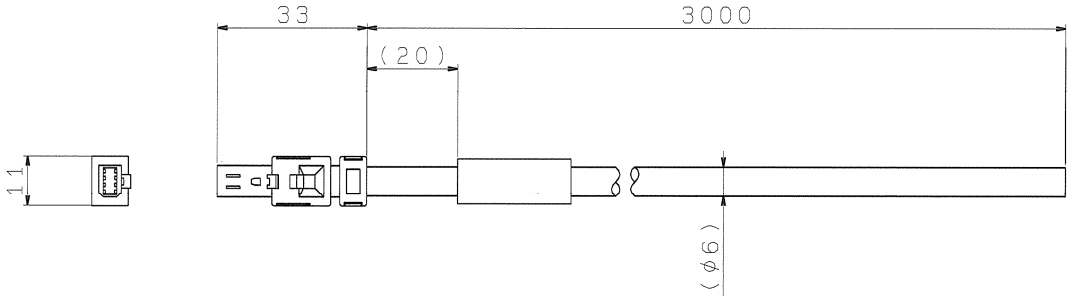

Pin Layout

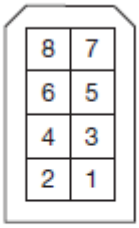

· Specifications

Pin No.	Signal	Lead Color	Marking Color
1	Not used	–	–
2	Not used	–	–
3	/HWBB1–	White	Black
4	/HWBB1+	White	Red
5	/HWBB2–	Gray	Black
6	/HWBB2+	Gray	Red
7	EDM1–	Orange	Black
8	EDM1+	Orange	Red

4. Operation

4.1 MECHATROLINK-III Communications Settings

This section describes the switch settings necessary for MECHATROLINK-III communications.

4.1.1 Setting Switches S1, S2, and S3

The DIP switch S3 is used to make the settings for MECHATROLINK-III communications.
The station address is set using the rotary switches S1 and S2.

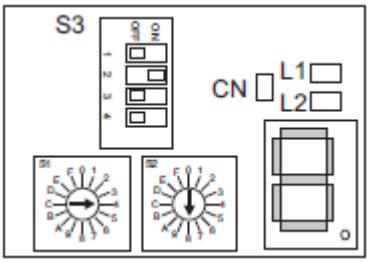

(1) Settings of the Rotary Switches S1 and S2

Set the station address using the rotary switches S1 and S2.

Station Address	S1	S2
00H to 02H: Disabled (Do not use these addresses.)	0	0 to 2
03H (Factory setting)	0	3
04H	0	4
・ ・ ・		
EFH	E	F
F0H to FFH: Disabled (Do not use these addresses.)	F	0 to F

(2) Settings of the DIP Switch S3

The following table shows the settings of the DIP switch (S3).

Switch No.	Function	Setting		Description	Factory setting
Pins 1 and 2	Sets the number of transmission bytes.	1	2	Number of transmission bytes	1: OFF 2: ON
		OFF	OFF	16 byte	
		ON	OFF	32 byte	
		OFF	ON	48 byte	
		ON	ON	Reserved. (Do not change.)	
Pin 3	Reserved. (Do not change.)				OFF
Pin 4	Reserved. (Do not change.)				OFF

IMPORTANT

- When using the MECHATROLINK-III standard servo profile, set the number of transmission bytes to either 32 or 48.
- When using the MECHATROLINK-II-compatible profile, set the number of transmission bytes to either 16 or 32.
- Turn the power OFF and then ON again to enable the new settings.

4.2 MECHATROLINK-III Commands

For information on the MECHATROLINK-III commands, refer to *8. Commands*.

4.3 Basic Functions Settings

4.3.1 Servomotor Rotation Direction

The servomotor rotation direction can be reversed with parameter Pn000.0 without changing the polarity of the speed/position reference. This causes the rotation direction of the servomotor to change, but the polarity of the signal, such as encoder output pulses, output from the DRIVER does not change. (refer to *4.4.4 Encoder Output Pulses*)

Parameter		Forward/ Reverse Reference	Direction of Motor Rotation and Encoder Output Pulse	Applicable Over-travel (OT)
Pn000	n.□□□0 Sets CCW as forward direction. [Factory setting]	Forward Reference	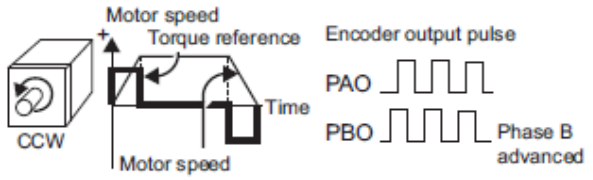	P-OT
		Reverse Reference	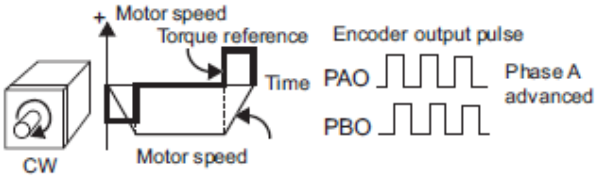	N-OT
	n.□□□1 Sets CW as forward direction. (Reverse Rotation Mode)	Forward Reference	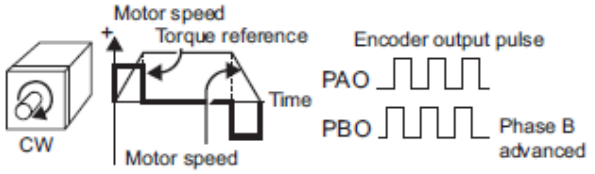	P-OT
		Reverse Reference	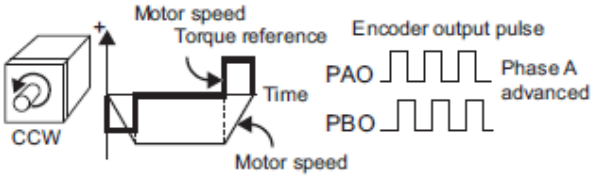	N-OT

Note: SigmaWin+ trace waveforms are shown in the above table.

4.3.2 Overtravel

The overtravel limit function forces movable machine parts to stop if they exceed the allowable range of motion and turn ON a limit switch.

⚠ CAUTION

- Installing limit switches
  For machines that move using linear motion, connect limit switches to P-OT and N-OT of CN1 as shown below to prevent machine damage. To prevent a contact fault or disconnection from causing accidents, make sure that the limit switches are normally closed.

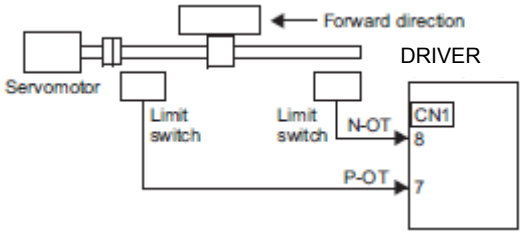

- Axes to which external force is applied in overtravel
  Vertical axes:
  Occurrence of overtravel may cause a workpiece to fall, because the /BK signal is on, that is when the lock is released. Set the parameter (Pn001 = n.□□1□) to bring the servomotor to zero clamp state after stopping to prevent a workpiece from falling.
  Other axes to which external force is applied:
  Overtravel will bring about a baseblock state after the servomotor stops, which may cause the servomotor to be pushed back by the load's external force. To prevent this, set the parameter (Pn001 = n.□□1□) to bring the servomotor to zero clamp state after stopping.
  For details on how to set the parameter, refer to *(3) Servomotor Stopping Method When Overtravel is Used.*

(1)Signal Setting

Type	Name	Connector Pin Number	Setting	Meaning
Input	P-OT	CN1-7	ON	Forward run allowed. Normal operation status.
			OFF	Forward run prohibited. Forward overtravel.
	N-OT	CN1-8	ON	Reverse run allowed. Normal operation status.
			OFF	Reverse run prohibited. Reverse overtravel.

Rotation in the opposite direction is possible during overtravel by inputting the reference.

(2)Overtravel Function Setting

Parameters Pn50A and Pn50B can be set to enable or disable the overtravel function.

If the overtravel function is not used, no wiring for overtravel input signals will be required.

Parameter		Meaning	When Enabled	Classification
Pn50A	n.1□□□ [Factory setting]	Inputs the Forward Run Prohibited (P-OT) signal from CN1-7.	After restart	Setup
	n.8□□□	Disables the Forward Run Prohibited (P-OT) signal. Allows constant forward rotation.		
Pn50B	n.□□□2 [Factory setting]	Inputs the Reverse Run Prohibited (N-OT) signal from CN1-8.		
	n.□□□8	Disables the Reverse Run Prohibited (N-OT) signal. Allows constant reverse rotation.		

A parameter can be used to re-allocate input connector number for the P-OT and N-OT signals. Refer to *3.3.1 Input Signal Allocations* for details.

(3)Servomotor Stopping Method When Overtravel is Used

There are three servomotor stopping methods when an overtravel is used.

- Dynamic brake
  By short-circuiting the electric circuits, the servomotor comes to a quick stop.
- Decelerate to a stop
  Stops by using emergency stop torque.
- Coast to a stop
  Stops naturally, with no control, by using the friction resistance of the servomotor in operation.

After servomotor stopping, there are two modes.

- Coast mode
  Stopped naturally, with no control, by using the friction resistance of the servomotor in operation.
- Zero clamp mode
  A mode forms a position loop by using the position reference zero.

The servomotor stopping method when an overtravel (P-OT, N-OT) signal is input while the servomotor is operating can be set with parameter Pn001.

Parameter		Stop Method	Mode After Stopping	When Enabled	Classification
Pn001	n.□□00 [Factory setting]	DB	Coast	After restart	Setup
	n.□□01				
	n.□□02	Coast			
	n.□□1□	Deceleration to a stop	Zero clamp		
	n.□□2□		Coast		

- A servomotor under torque control cannot be decelerated to a stop. The servomotor is stopped with the dynamic braking (DB) or coasts to a stop according to the setting of Pn001.0. After the servomotor stops, the servomotor will enter a coast state.
- For details on servomotor stopping methods after the SV_OFF command is received or an alarm occurs, refer to *4.3.5 Stopping Servomotors after SV_OFF Command or Alarm Occurrence*.

-When Servomotor Stopping Method is Set to Decelerate to Stop
  Emergency stop torque can be set with Pn406.

Pn406	Emergency Stop Torque			Speed Position Torque	Classification
	Setting Range	Setting Unit	Factory Setting	When Enabled	
	0 to 800	1%	800	Immediately	Setup

- The setting unit is a percentage of the rated torque.
- The factory setting is 800% so that the setting is large enough a value to operate the servomotor at maximum torque. The maximum value of emergency stop torque that is actually available, however, is limited to the maximum torque of the servomotor.

(4)Overtravel Warning Function

This function detects an overtravel warning (A.9A0) if overtravel occurs while the servomotor power is ON. Using this function enables notifying the host PC or PLC...etc when the DRIVER detects overtravel even if the overtravel signal is ON only momentarily.

To use the overtravel warning function, set digit 4 of Pn00D to 1 (detects overtravel warning).

Note: The overtravel warning function is supported by software version 001A or later. The software version can be checked with SigmaWin+. For details, refer to *6.13 Product Information Display (Fn012)*.

- Warning Output Timing

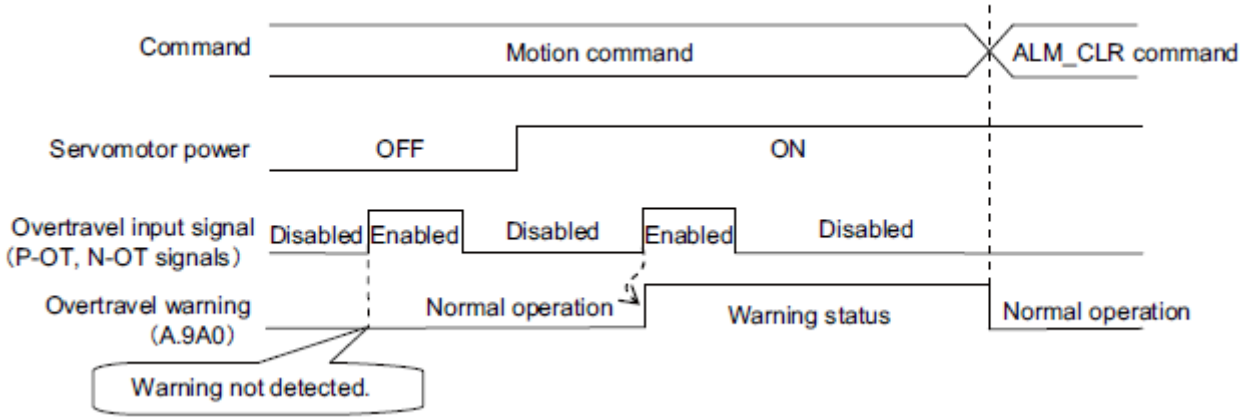

<Notes>

- Warnings are detected for overtravel in the same direction as the reference.
- Warnings are not detected for overtravel in the reverse direction from the reference.
  Example:A warning will not be output for a forward reference even if the N-OT signal (reverse run prohibited) turns ON.
- A warning can be detected in either the forward or reverse direction, when there is no reference.
- A warning will not be detected when the servomotor power is OFF even if overtravel occurs.
- A warning will not be detected when the servomotor power changes from OFF to ON even if overtravel status exists.
- To clear the overtravel warning, send a Clear Warning or Alarm command (ALM_CLR) regardless of the status of the servomotor power and the overtravel signal. If the warning is cleared by this method during an overtravel state, the occurrence of the warning will not be indicated until the overtravelling is corrected and reset.
- The overtravel warning will be detected when the software limit is in effect.

⚠ CAUTION

- The overtravel warning function only detects warnings. It does not affect on stopping for overtravel or motion operations at the host PC or PLC...etc. The next step (e.g., the next motion or other command) can be executed even if an overtravel warning exists. However, depending on the processing specifications and programming for warnings in the host PC or PLC...etc, operation may be affected when an overtravel warning occurs (e.g., motion may stop or not stop). Confirm the specifications and programming in the host PC or PLC...etc.
- When an overtravel occurs, the DRIVER will perform stop processing for overtravel. Therefore, when an overtravel warning occurs, the servomotor may not reach the target position specified by the host PC or PLC...etc. Check the feedback position to make sure that the axis is stopped at a safe position.

-Related Parameter

Parameter		Meaning	When Enabled	Classification
Pn00D	n.0□□□ [Factory setting]	Does not detect overtravel warning.	Immediately	Setup
	n.1□□□	Detects overtravel warning.		

4.3.3 Software Limit Settings

The software limits set limits in software for machine movement that do not use the overtravel signals (P-OT and N-OT). If a software limit is exceeded, an emergency stop will be executed in the same way as it is for overtravel.

(1)Software Limit Function

The software limit function can be enabled or disabled.

Use the parameter Pn801.0 to enable the software limit function.

The software limit function can be enabled under the following conditions. Under all other circumstances, the software limits will not be enabled even if a software limit is exceeded.

- The ZRET command has been executed.
- REFE = 1 using the POS_SET command.

Enable or disable the software limits using one of the following settings.

Parameter		Description	When Enabled	Classification
Pn801	n.□□□0	Software limits enabled in both direction.	Immediately	Setup
	n.□□□1	Forward software limit enabled.		
	n.□□□2	Reverse software limit enabled.		
	n.□□□3 [Factory setting]	Both software limits disabled.		

(2)Software Limit Check using References

Enable or disable software limit checks when target position references such as POSING or INTERPOLATE are input. When the input target position exceeds the software limit, a deceleration stop will be performed from the software limit set position.

Parameter		Description	When Enabled	Classification
Pn801	n.□0□□ [Factory setting]	No software limit check using references.	Immediately	Setup
	n.□1□□	Software limit check using references.		

(3)Software Limit Setting

Set software limits value in the positive and negative directions.

Because the limit zone is set according to the forward or reverse direction, the reverse limit must be less than the forward limit.

Pn804	Forward Software Limit			Position	Classification
	Setting Range	Setting Unit	Factory Setting	When Enabled	
	-1073741823 to 1073741823	1 Reference Unit	819191808	Immediately	Setup
Pn806	Reverse Software Limit			Position	Classification
	Setting Range	Setting Unit	Factory Setting	When Enabled	
	-1073741823 to 1073741823	1 Reference Unit	-819191808	Immediately	Setup

4.3.4 Holding Locks

A holding lock is a lock used to hold the position of the movable part of the machine when the DRIVER is turned OFF so that movable part does not move due to gravity or external forces. Holding locks are built into servomotors with locks.

The holding lock is used in the following cases.

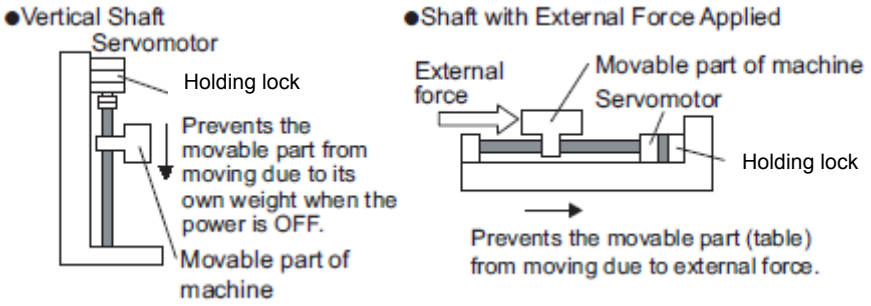

> **IMPORTANT**
> - The brake built into the servomotor with brakes is a de-energization brake, which is used only to hold and cannot be used for braking.
> - Use the holding lock only to hold a stopped servomotor.

There is a delay in the braking operation. Set the following ON/OFF timing.

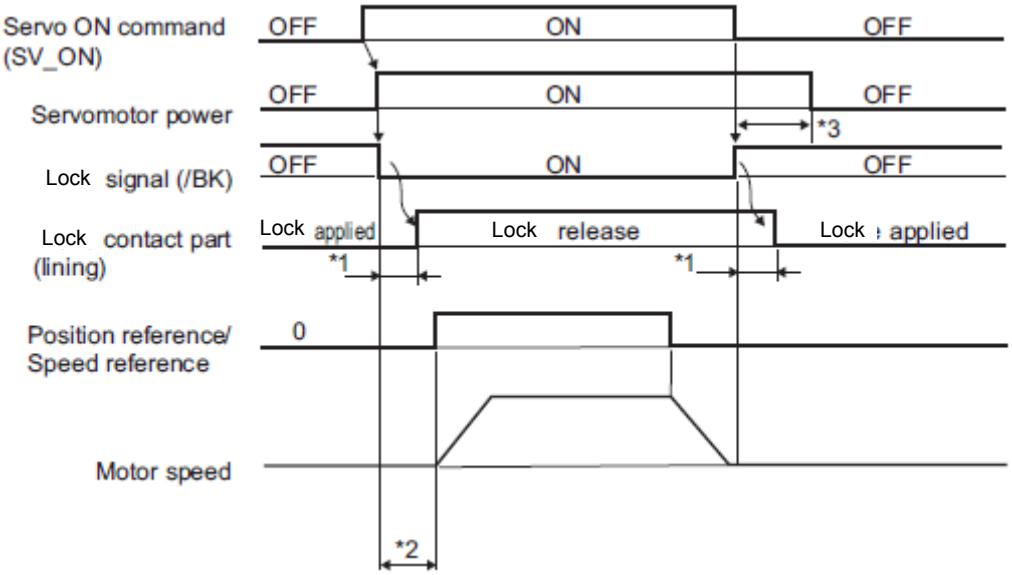

∗1. The operation delay time of the lock depends on the model. For details, refer to *Lock Operation Delay Time* shown below.

∗2. After the SV_ON command has been sent and 50 ms has passed since the lock was released, output the reference from the host PC or PLC...etc to the DRIVER.

∗3. Use Pn506, Pn507, and Pn508 to set the timing of when the lock will be activated and when the servomotor power will be turned OFF.

Lock Operation Delay Time

Model	Voltage	Lock Release Time (ms)	Lock Applied Time (ms)
LECYU2-V5, V7, V8	24 VDC	60	100
LECYU2-V9		80	100

Note: The above operation delay time is an example when the power supply is turned ON and OFF on the DC side.
Be sure to evaluate the above times on the actual equipment before using the application.

(1) Wiring Example

Use the lock signal (/BK) and the lock power supply to form a lock ON/OFF circuit. The following diagram shows a standard wiring example.

The timing can be easily set using the lock signal (/BK).

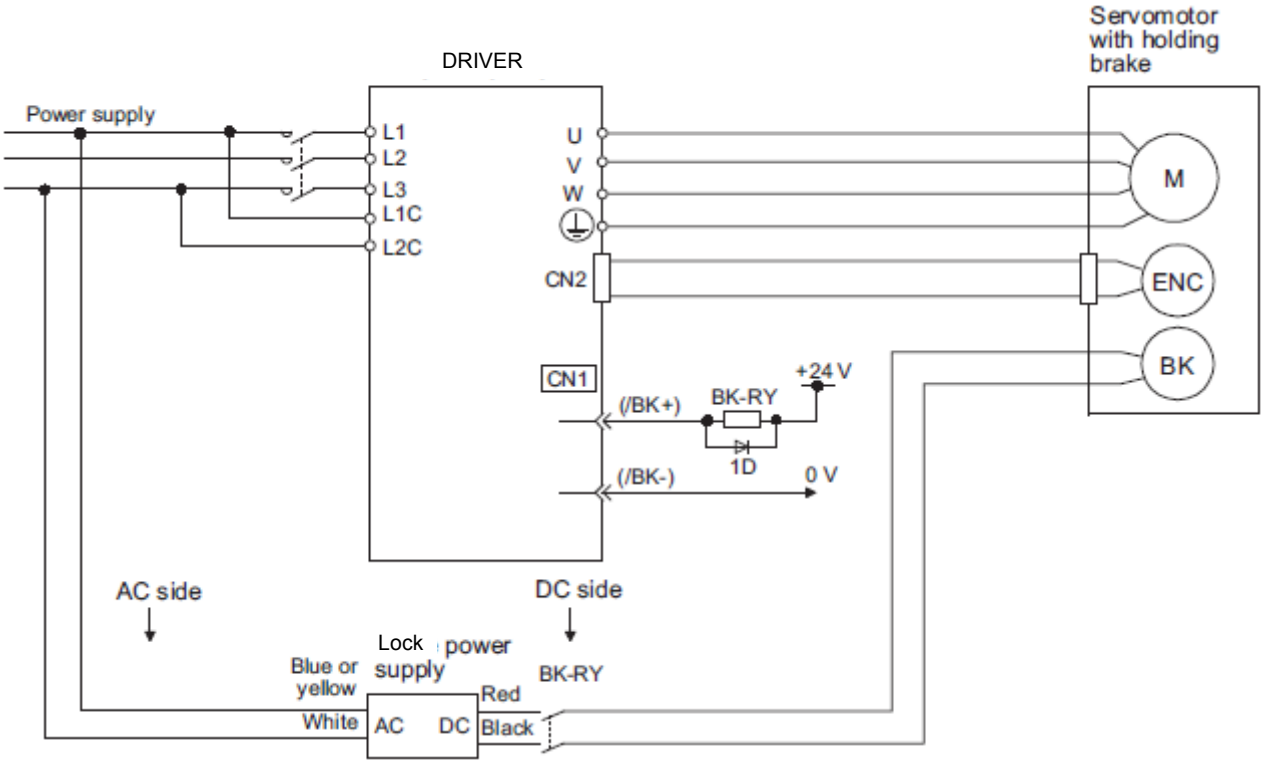

BK-R Y: Lock control relay
24 VDC power supply is not included.

IMPORTANT

- Select the optimum surge absorber in accordance with the applied lock current and lock power supply.
  When using the 24-V power supply: Z15D121 (Made by SEMITEC Corporation)
- After the surge absorber is connected, check the total time the lock is applied for the system. Depending on the surge absorber, the total time the lock is applied can be changed.
- Configure the relay circuit to apply the holding lock by the emergency stop.

Relay Circuit Example

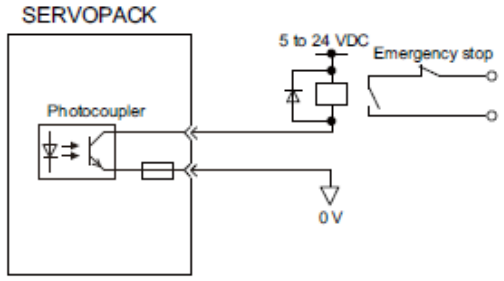

- The allocation of the /BK signal can be changed. Refer to *(3) Lock signal (/BK) Allocation* to set the parameter Pn50F.
- When using a 24-V lock, separate the 24-VDC power supply from other power supplies, such as the one used for the I/O signals of CN1 connectors. Always install the 24-VDC power supply separately. If the power supply is shared, the I/O signals might malfunction.

(2) Lock signal (/BK) Setting

This output signal controls the lock. The allocation of the /BK signal can be changed. Refer to *(3) Lock Sig- nal (/BK) Allocation* for allocation.

The /BK signal turns OFF (applies the lock) when an alarm is detected or the SV_OFF command is received. The lock OFF timing can be adjusted with Pn506.

Type	Name	Connector Pin Number	Setting	Meaning
Output	/BK	CN1-1, CN1-2	ON (closed)	Releases the lock.
			OFF (open)	Applies the lock.

IMPORTANT

The /BK signal is still ON during overtravel and the lock is still released.

(3) Lock signal (/BK) Allocation

Use parameter Pn50F.2 to allocate the /BK signal.

Parameter		Connector Pin Number		Meaning	When Enabled	Classifica - tion
		+ Terminal	- Terminal			
Pn50F	n.□0□□	–	–	The /BK signal is not used.	After restart	Setup
	n.□1□□ [Factory setting]	CN1-1	CN1-2	The /BK signal is output from output terminal CN1-1, 2.		
	n.□2□□	CN1-23	CN1-24	The /BK signal is output from output terminal CN1-23, 24.		
	n.□3□□	CN1-25	CN1-26	The /BK signal is output from output terminal CN1-25, 26.		

IMPORTANT

When multiple signals are allocated to the same output terminal, the signals are output with OR logic. For the /BK signal, do not use the output terminal that is already being used for another signal.

(4) Lock ON Timing after the Servomotor Stops

When the servomotor stops, the /BK signal turns OFF at the same time as the SV_OFF command is received. Use parameter Pn506 to change the timing to turn OFF the servomotor power after the SV_OFF command has been received.

Pn506	Lock Reference-Servo OFF Delay Time			Speed Position Torque	Classification
	Setting Range	Setting Unit	Factory Setting	When Enabled	
	0 to 50	10 ms	0	Immediately	Setup

- When using the servomotor to control a vertical axis, the machine movable part may shift slightly depending on the lock ON timing due to gravity or an external force. To eliminate this slight shift, set parameter so that the power to the servomotor turns OFF after the lock is applied.
- This parameter changes the lock ON timing while the servomotor is stopped.

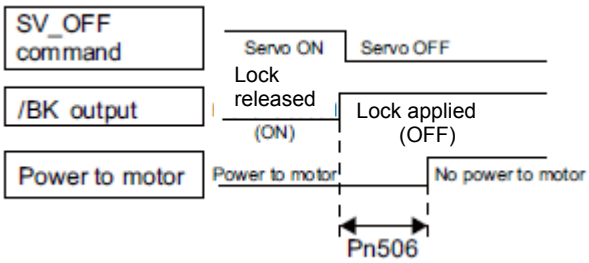

IMPORTANT

The servomotor will turn OFF immediately when an alarm occurs, regardless of the setting of this parameter. The machine movable part may shift due to gravity or external force before the lock operates.

(5) Lock signal (/BK) Output Timing during Servomotor Rotation

If an alarm occurs while the servomotor is rotating, the servomotor will come to a stop and the lock signal (/BK) will be turned OFF. The timing of lock signal (/BK) output can be adjusted by setting the lock reference output speed level (Pn507) and the waiting time for lock signal when motor running (Pn508).

Note: If the servomotor is set so that it comes to a zero-speed stop for an alarm, follow the information in *(4) Lock ON Timing after the Servomotor Stops* after the servomotor comes to a stop for a zero position reference.

Pn507	Lock Reference Output Speed Level			Speed Position Torque	Classification
	Setting Range	Setting Unit	Factory Setting	When Enabled	
	0 to 10000	1 min^{-1}	100	Immediately	Setup
Pn508	Waiting Time for Lock signal When Motor Running			Speed Position Torque	Classification
	Setting Range	Setting Unit	Factory Setting	When Enabled	
	10 to 100	10 ms	50	Immediately	Setup

/BK Signal Output Conditions When Servomotor Rotating

The /BK signal goes to high level (lock ON) when either of the fol- lowing conditions is satisfied:

- When the motor speed falls below the level set in Pn507 after the power to the servomotor is turned OFF.
- When the time set in Pn508 is exceeded after the power to the servomotor is turned OFF.

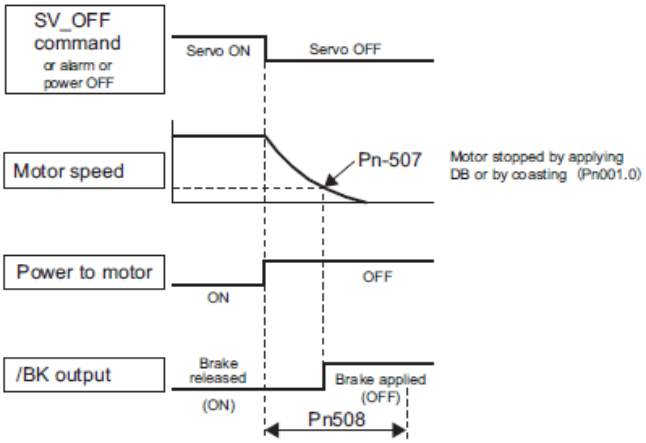

IMPORTANT

- The servomotor will be limited to its maximum speed even if the value set in Pn507 is higher than the maximum speed.
- Do not allocate the rotation detection signal (/TGON) and the lock signal (/BK) to the same terminal. The /TGON signal will otherwise be turned ON by the falling speed on a vertical axis, and the lock may not operate.
  For the /BK signal, do not use the terminal that is already being used for another signal.

4.3.5 Stopping Servomotors after SV_OFF Command or Alarm Occurrence

The servomotor stopping method can be selected after the SV_OFF command is received or an alarm occurs.

IMPORTANT

- Dynamic braking (DB) is used for emergency stops. The DB circuit will operate frequently if the power is turned ON and OFF or the SV_ON command and SV_OFF command are received with a reference input applied to start and stop the servomotor, which may result in deterioration of the internal elements in the DRIVER. Use speed input references or position references to start and stop the servomotor.
- If the main circuit power supply or the control power supply is turned OFF but the SV_OFF command has not been received, the stopping method for servomotor cannot be set in the parameters. Use the following method to stop the servomotor.

  If turning OFF the main circuit power supply, but the SV_OFF command has not been received, the servomotor will be stopped by dynamic braking.
- If turning OFF the control power supply, the servomotor will be stopped by dynamic braking.
- If the servomotor must be stopped by coasting rather than by dynamic braking when the main circuit power supply or the control power supply is turned OFF but the SV_OFF command has not been received, arrange the sequence externally so the current will be cut off for servomotor wires U, V, and W.
- To minimize the coasting distance of the servomotor to come to a stop when an alarm occurs, the zero-speed stopping method is factory-set for alarms to which the zero-speed stop method is applicable. The DB stopping method may be more suitable than the zero-speed stopping method, however, depending on the application.
  For example, for multiple axes coupling operation (a twin-drive operation), machinery damage may result if a zero-speed stop alarm occurs for one of the coupled shafts and the other shaft stops by dynamic brake. In such cases, change the method to the DB stopping method.

(1) Stopping Method for Servomotor after SV_OFF Command is Received

Use Pn001.0 to select the stopping method for the servomotor after the SV_OFF command is received.

Parameter		Stop Mode	Mode After Stopping	When Enabled	Classification
Pn001	n.□□□0 [Factory setting]	DB	DB	After restart	Setup
	n.□□□1		Coast		
	n.□□□2	Coast	Coast		

Note: Similar to the Coast Mode, the n.□□□0 setting (which stops the servomotor by dynamic braking and then holds it in Dynamic Brake Mode) does not generate any braking force when the servomotor stops or when it rotates at very low speed.

(2) Stopping Method for Servomotor When an Alarm Occurs

There are two types of alarms (Gr.1 and Gr.2) that depend on the stopping method when an alarm occurs. Select the stopping method for the servomotor when an alarm occurs using Pn001.0 and Pn00B.1.

The stopping method for the servomotor for a Gr.1 alarm is set to Pn001.0.
The stopping method for the servomotor for a Gr.2 alarm is set to Pn00B.1.

Refer to the information on alarm stopping methods in *9.1.1 List of Alarms*.

- Stopping Method for Servomotor for Gr.1 Alarms

The stopping method of the servomotor when a Gr.1 alarm occurs is the same as that in *(1) Stopping Method for Servomotor after SV_OFF Command is Received*.

Parameter		Stop Mode	Mode After Stopping	When Enabled	Classification
Pn001	n.□□□0 [Factory setting]	DB	DB	After restart	Setup
	n.□□□1		Coast		
	n.□□□2	Coast	Coast		

- Stopping Method for Servomotor for Gr.2 Alarms

Parameter		Stop Mode	Mode After Stopping	When Enabled	Classification
Pn00B	Pn001				
n.□□0□ [Factory setting]	n.□□□0 [Factory setting]	Zero-speed stopping*	DB	After restart	Setup
	n.□□□1		Coast		
	n.□□□2				
n.□□1□	n.□□□0 [Factory setting]	DB	DB		
	n.□□□1		Coast		
	n.□□□2	Coast			

∗ Zero-speed stopping: The speed reference is set to 0 to stop quickly.
Note: The setting of Pn00B.1 is effective for position control and speed control. Pn00B.1 will be ignored for torque control and only the setting of Pn001.0 will be valid.

4.3.6 Instantaneous Power Interruption Settings

Determines whether to continue operation or turn OFF the servomotor's power when the power supply voltage to the DRIVER's main circuit is interrupted.

Pn509	Instantaneous Power Cut Hold Time			Speed Position Torque	Classification
	Setting Range	Setting Unit	Factory Setting	When Enabled	
	20 to 1000	1 ms	20	Immediately	Setup

If the power interruption time is shorter than the set value in Pn509, the servomotor will continue operation. If it is longer than the set value, the servomotor's power will be turned OFF during the power interruption. The servomotor is turned ON when power supply to the main circuit recovers.

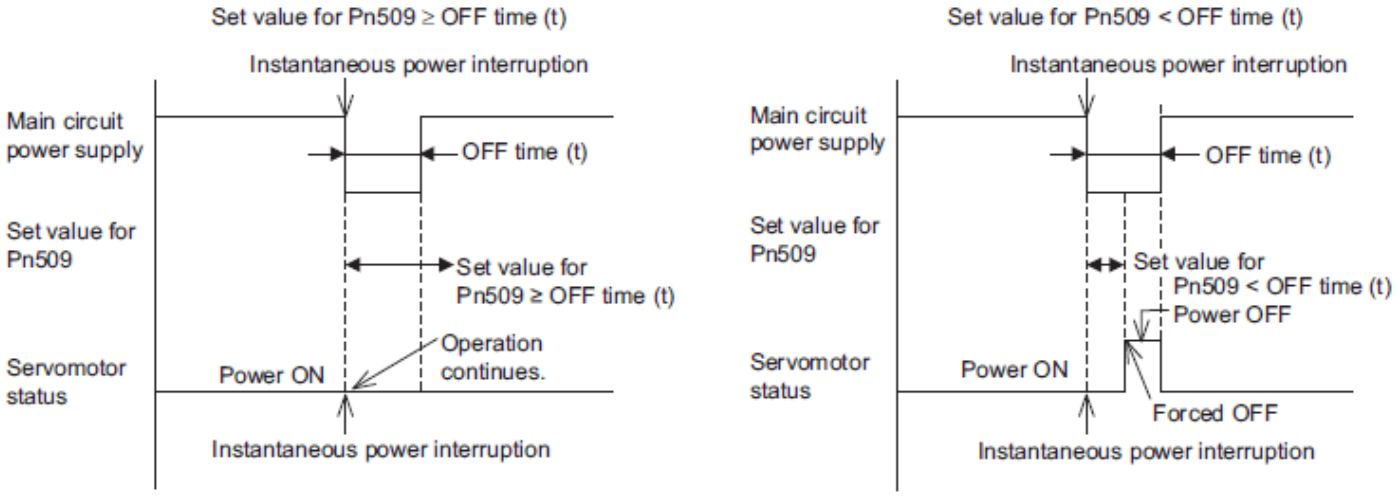

Note: If the instantaneous power interruption is longer than the set value of Pn509, the /S-RDY signal turns OFF.

IMPORTANT

- The holding time of the control power supply for the 200-V DRIVERs is approximately 100 ms. If the control power supply makes control impossible during an instantaneous power interruption, the same operation will be performed as for normally turning OFF the power supply, and the setting of Pn509 will be ignored.
- The holding time of the main circuit power supply varies with the output of the DRIVER. If the load on the servomotor is large and an undervoltage alarm (A.410) occurs, the setting of Pn509 will be ignored.

If the uninterruptible power supplies are used for the control power supply and main circuit power supply, the DRIVER can withstand an instantaneous power interruption period in excess of 1000 ms.

4.3.7 SEMI F47 Function (Torque Limit Function for Low DC Power Supply Voltage for Main Circuit)

The torque limit function detects an undervoltage warning and limits the output current if the DC power sup- ply voltage for the main circuit in the DRIVER drops to a specified value because the power was momentarily interrupted or the power supply voltage for the main circuit was temporality lowered.

This function complies with SEMI F47 standards for semiconductor production equipment.

Combining this function with the parameter for Instantaneous Power Cut Hold Time allows the servomotor to continue operating without stopping for an alarm or without recovery work even if the power supply voltage drops.

IMPORTANT

- This function is able to cope with instantaneous power interruptions in the voltage and time ranges stipulated in SEMI F47. An uninterruptible power supply (UPS) is required as a backup for instantaneous power interruptions that exceed these voltage and time ranges.
- This function is intended for voltage drops in the main circuit power supply.
- Set the host PC or PLC...etc and DRIVER torque limit so that a torque reference that exceeds the specified acceleration will not be output when the power supply for the main circuit is restored.
- Do not limit the torque to values lower than the holding torque for the vertical axis.
- This function limits torque within the range of the DRIVER's capability when the power is cut. It is not intended for use under all load and operating conditions. Use the actual machine to set parameters while confirming correct operation.
- Setting the Instantaneous Power Cut Hold Time lengthens the amount of time from when the power supply is turned OFF until the motor current turns OFF. Send the SV_OFF command to instantly stop the motor current.

(1) Execution Method

This function can be executed either with the host PC or PLC...etc and the DRIVER or with the DRIVER only.

– With the Host PC or PLC...etc and the DRIVER

The host PC or PLC...etc limits the torque in response to an undervoltage warning.
The host PC or PLC...etc removes the torque limit after the undervoltage warning is cleared.

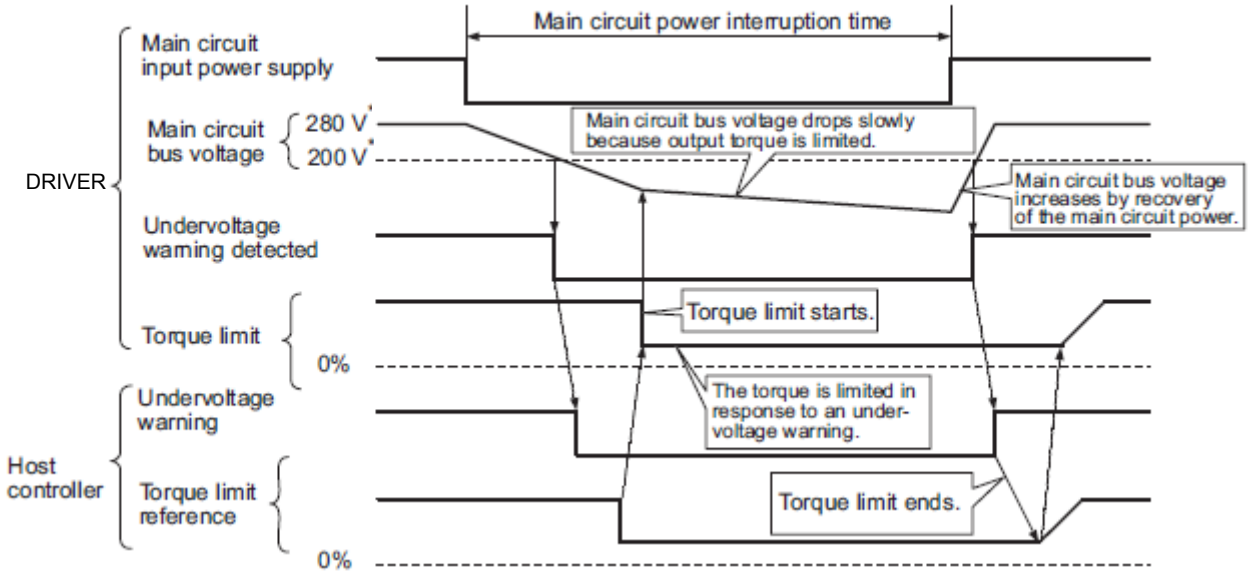

- With the DRIVER only

The torque is limited in the DRIVER in response to an undervoltage warning.
The DRIVER controls the torque limit value in the set time after the undervoltage warning is cleared.
Use Pn008.1 to specify whether the function is executed by the host PC or PLC...etc and DRIVER or by the DRIVER only.

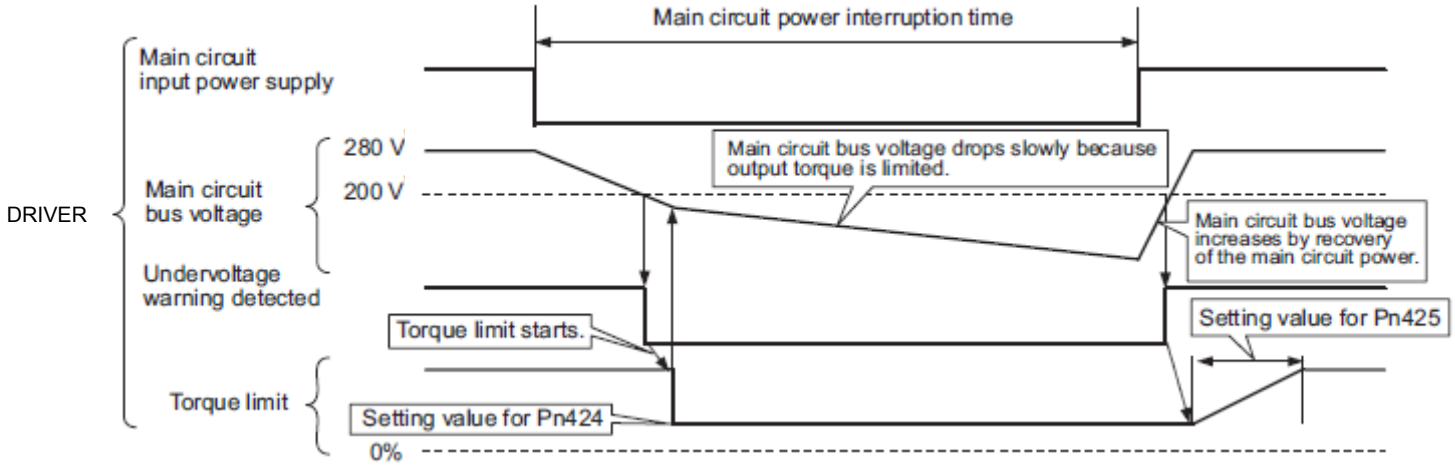

(2) Related Parameters

Parameter		Meaning	When Enabled	Classification
Pn008	n.□□0□ [Factory setting]	Does not detect undervoltage.	After restart	Setup
	n.□□1□	Detects warning and limits torque by host PC or PLC...etc.		
	n.□□2□	Detects warning and limits torque by Pn424 and Pn425. (Only in the DRIVER)		

Pn424	Torque Limit at Main Circuit Voltage Drop		Speed Position Torque		Classification
	Setting Range	Setting Unit	Factory Setting	When Enabled	
	0 to 100	1%*	50	Immediately	Setup
Pn425	Release Time for Torque Limit at Main Circuit Voltage Drop		Speed Position Torque		Classification
	Setting Range	Setting Unit	Factory Setting	When Enabled	
	0 to 1000	1 ms	100	Immediately	Setup

∗ The setting unit is a percentage of the rated torque.

Pn509	Instantaneous Power Cut Hold Time		Speed Position Torque		Classification
	Setting Range	Setting Unit	Factory Setting	When Enabled	
	20 to 1000	1 ms	20	Immediately	Setup

Note: When using SEMI F47 function, set 1000 ms.

4.3.8 Setting Motor Overload Detection Level

In this DRIVER, the detection timing of the warnings and alarms can be changed by changing how to detect an overload warning (A.910) and overload (low load) alarm (A.720).
The overload characteristics and the detection level of the overload (high load) alarm (A.710) cannot be changed.

(1) Changing Detection Timing of Overload Warning (A.910)

The overload warning level is set by default to 20% so that an overload warning is detected in 20% of the time required to detect an overload alarm. The time required to detect an overload warning can be changed by changing the setting of the overload warning level (Pn52B). This protective function enables the warning out- put signal (/WARN) to serve as a protective function and to be output at the best timing for your system.
The following graph shows an example of the detection of an overload warning when the overload warning level (Pn52B) is changed from 20% to 50%. An overload warning is detected in half of the time required to detect an overload alarm.

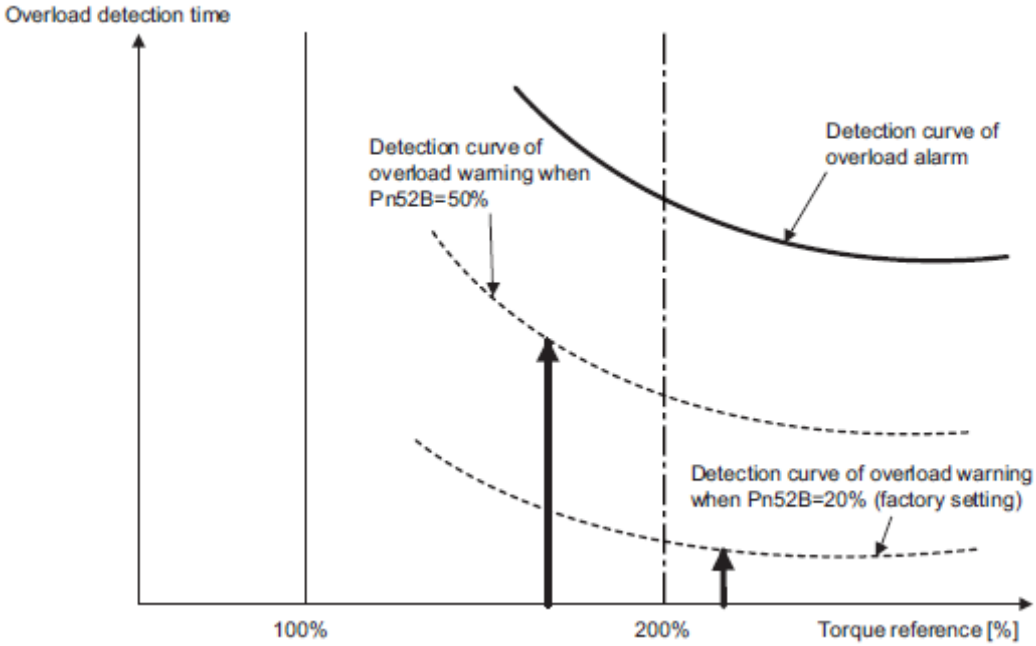

Pn52B	Overload Warning Level			Speed Position Torque	Classification
	Setting Range	Setting Unit	Factory Setting	When Enabled	
	1 to 100	1%	20	Immediately	Setup

Overload characteristics for LECYU2 series

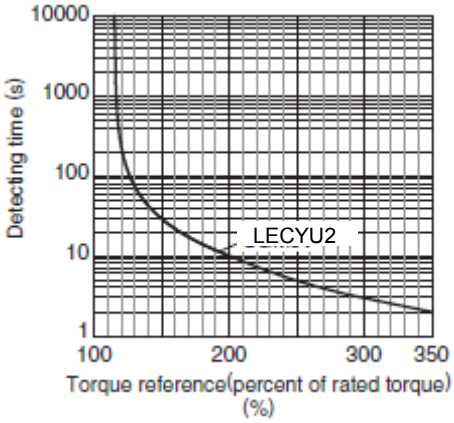

(2) Changing Detection Timing of Overload (Low Load) Alarm (A.720)

An overload (low load) alarm (A.720) can be detected earlier to protect the servomotor from overloading. The time required to detect an overload alarm can be shortened by using the derated motor base current obtained with the following equation.

Note: The detection level of the overload (high load) alarm (A.710) cannot be changed.

Motor base current × Derating of base current at detecting overload of motor (Pn52C)
= Derated motor base current

Motor base current: Threshold value of motor current to start calculation for overload alarm
Derating of base current at detecting overload of motor (Pn52C): Derating of motor base current

The following graph shows an example of the detection of an overload alarm when Pn52C is set to 50%. The calculation for the overload of motors starts at 50% of the motor base current and then an overload alarm will be detected earlier.
Changing the setting of Pn52C will change the detection timing of the overload alarm, so the time required to detect the overload warning will also be changed.

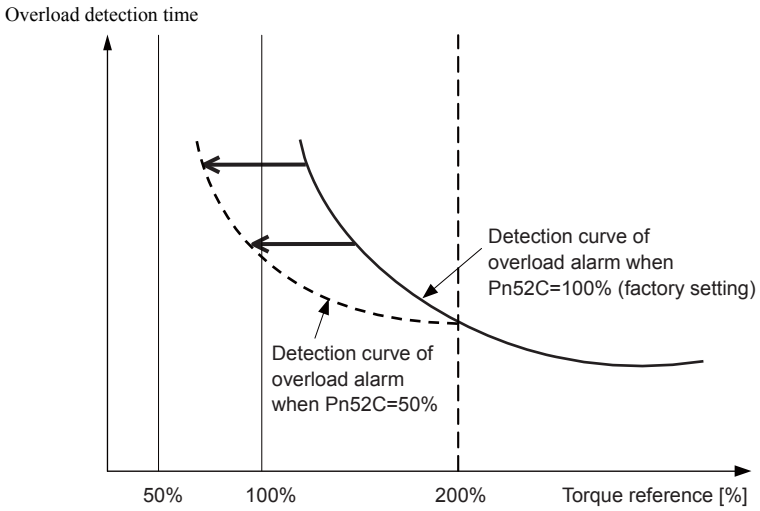

Note: Refer to *Overload Characteristics* listed in the *(1) Changing Detection Timing of Overload Warning (A.910)*.

Pn52C	Derating of Base Current at Detecting Overload of Motor			Speed Position Torque	Classification
	Setting Range	Setting Unit	Factory Setting	When Enabled	
	10 to 100	1%	100	After restart	Setup

As a guideline of motor heating conditions, the relationship between the heat sink sizes and deratings of base current is shown in a graph.
Set Pn52C to a value in accordance with the heat sink size and derating shown in the graph, so that an overload alarm can be detected at the best timing to protect the servomotor from overloading.

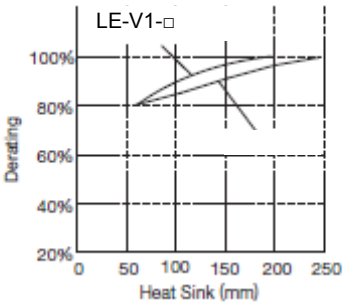

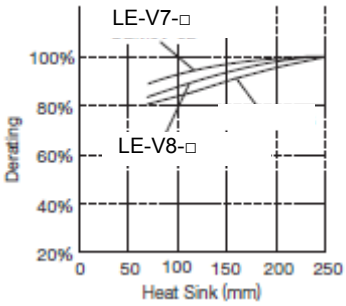

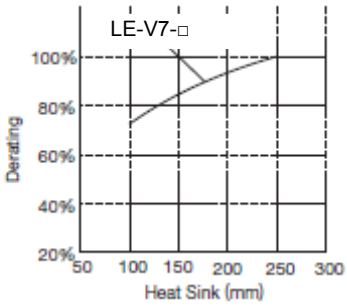

4.4 Trial Operation

This section describes a trial operation using MECHATROLINK-III communications.

4.4.1 Inspection and Checking before Trial Operation

To ensure safe and correct trial operation, inspect and check the following items before starting trial operation.

(1) DRIVERs

Inspect and check the following items, and take appropriate measures before performing trial operation if any problem exists.

- Are all wiring and connections correct?
- Is the correct power supply voltage being supplied to the DRIVER?

4.4.2 Trial Operation via MECHATROLINK-III

The following table provides the procedures for trial operation via MECHATROLINK-III.

Step	Description	Reference
1	Confirm that the wiring is correct, and then connect the I/O signal connector (CN1 connector).	*3 Wiring and Connection*
2	Turn ON the power to the DRIVER. And then, turn ON the power of the host PC or PLC...etc. If the power is supplied to the DRIVER's control circuit, the seven-segment LED indicator will light up as shown here.  If the power is supplied to the DRIVER's main circuit, the CHARGE indicator on the DRIVER will light up. If communications are established, the L1 and L2, LED indicators corresponding to the connector CN6A and CN6B connected to the MECHATROLINK- III cable will light up. If the L1 and L2, LED indicators do not light up, recheck the settings of MECHATROLINK-III setting switches S1, S2, and S3, and then turn the power OFF and ON again.	–
3	Send the CONNECT command from the host PC or PLC...etc. If the DRIVER correctly receives the CONNECT command, the CN, LED indicator will light up. If the CN does not light up, the set value of the CONNECT command is incorrect. Reset the CONNECT command, and then resend it from the host PC or PLC...etc.	*8 MECHATROLINK-III Commands*
4	Check the product type using an ID_RD command. A reply showing the product type is received from the DRIVER.	
5	Set the following items to the necessary settings for a trial operation. • Electronic gear settings • Rotational direction of servomotor • Overtravel	*4.4.3 Electronic Gear* *4.3.1 Servomotor Rotation Direction* *4.3.2 Overtravel*
6	Save these settings (step 5). • If saving the settings in the host PC or PLC...etc, use the SVPRM_WR command(set the mode to RAM area). • If saving settings in the DRIVER, use the SVPRM_WR command (set the mode to the non-volatile memory area).	*8 MECHATROLINK-III Commands*
7	Send the CONFIG command to enable the settings.	
8	Send the SENS_ON command to obtain the position data (encoder ready response).	
9	Send the SV_ON command. A reply showing that the servomotor has switched to Drive status and that SVON=1 (servomotor power is ON) is received.	
10	Run the servomotor at low speed. <Example using a positioning command> Command used: POSING Command setting: Option = 0, Positioning position =10000 (If using the absolute encoder, add 10000 to the present position), rapid traverse speed= 400	–
11	Check the following points while running the servomotor at low speed (step 10). • Confirm that the rotational direction of the servomotor correctly coincides with the forward rotation or reverse rotation reference. If they do not coincide, reset the direction. • Confirm that no unusual vibrations, noises, or temperature rises occur. If any abnormalities are seen, correct the conditions. Note: Because the running-in of the load machine is not sufficient at the time of the trial operation, the servomotor may become overloaded.	*4.3.1 Servomotor Rotation Direction* *9.4 Troubleshooting Malfunction Based on Operation and Conditions of the Servomotor*

4.4.2 Electronic Gear

The electronic gear enables the workpiece travel distance per reference unit input from the host PC or PLC...etc. The minimum unit of the position data moving a load is called a reference unit.

The section indicates the difference between using and not using an electronic gear when a workpiece is moved 10 mm in the following configuration.

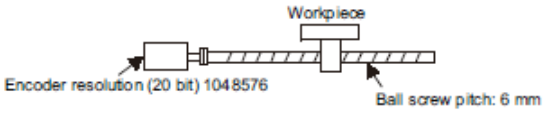

When the Electronic Gear is Not Used:

① Calculate the revolutions.
1 revolution is 6 mm. Therefore, 10 ÷ 6 = 10/6 revolutions.

② Calculate the required reference units.
1048576 reference units is 1 revolution. Therefore, 10/6 × 1048576 = 1747626.66 reference units.

③ Input 1747627 references as reference units.

Reference units must be calculated per reference. → complicated

When the Electronic Gear is Used:

The reference unit is 1 µm. Therefore, to move the workpiece 10 mm (10000 µm),
1 reference unit = 1 µm, so 10000 ÷ 1 = 10000 reference units.
Input 10000 reference units.

Calculation of reference units per reference is not required. → simplified

(1) Electronic Gear Ratio

Set the electronic gear ratio using Pn20E and Pn210.

Pn20E	Electronic Gear Ratio (Numerator)			Position	Classification
	Setting Range	Setting Unit	Factory Setting	When Enabled	
	1 to 1073741824	1	4	After restart	Setup
Pn210	Electronic Gear Ratio (Denominator)			Position	Classification
	Setting Range	Setting Unit	Factory Setting	When Enabled	
	1 to 1073741824	1	1	After restart	Setup

If the gear ratio of the servomotor and the load shaft is given as n/m where m is the rotation of the servomotor and n is the rotation of the load shaft,

$$\text{Electronic gear ratio: } \frac{B}{A} = \frac{Pn20E}{Pn210} = \frac{\text{Encoder resolution}}{\text{Travel distance per load shaft revolution (reference units)}} \times \frac{m}{n}$$

- Encoder Resolution

Encoder resolution is 1048576.

> **IMPORTANT**
>
> Electronic gear ratio setting range: 0.001 ≤ Electronic gear ratio (B/A) ≤ 4000
> If the electronic gear ratio is outside this range, a parameter setting error 1 (A.040) will be output.

(2) Electronic Gear Ratio Setting Examples

The following examples show electronic gear ratio settings for different load configurations.

Step	Operation	Ball Screw
		Reference unit: 0.001 mm 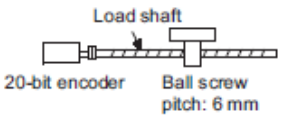
1	Check machine specifications.	· Ball screw pitch: 6 mm · Gear ratio: 1/1
2	Check the encoder resolution.	1048576 (20-bit)
3	Determine the reference unit used.	Reference unit: 0.001 mm (1 μm)
4	Calculate the travel distance per load shaft revolution. (Reference unit)	6 mm/0.001 mm=6000
5	Calculate the electronic gear ratio.	$\frac{B}{A} = \frac{1048576}{6000} \times \frac{1}{1}$
6	Set parameters.	Pn20E: 1048576 Pn210: 6000

4.4.4 Encoder Output Pulses

The encoder pulse output is a signal that is output from the encoder and processed inside the DRIVER. It is then output externally in the form of two phase pulse signal (phases A and B) with a 90˚ phase differential. It is used as the position feedback to the host PC or PLC...etc.

Signals and output phase form are as shown below.

(1) Signals

Type	Signal Name	Connector Pin Number	Name	Remarks
Output	PAO	CN1-17	Encoder output pulse: phase A	These encoder pulse output pins output the number of pulses per motor revolution that is set in Pn212. Phase A and phase B are different from each other in phase by an electric angle of 90˚.
	/PAO	CN1-18		
	PBO	CN1-19	Encoder output pulse: phase B	
	/PBO	CN1-20		
	PCO	CN1-21	Encoder output pulse: phase C	One pulse is output per motor rotation.
	/PCO	CN1-22		

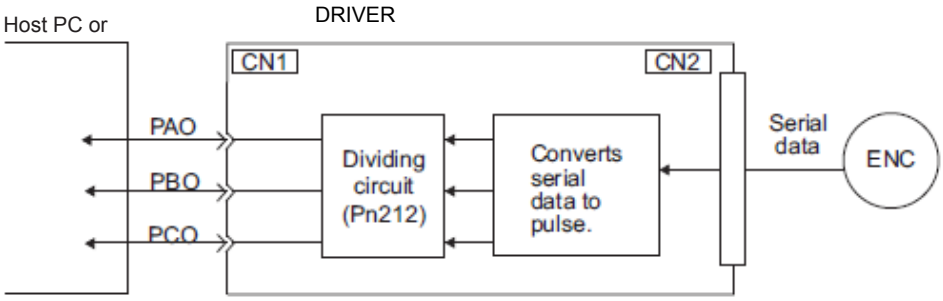

(2) Output Phase Form

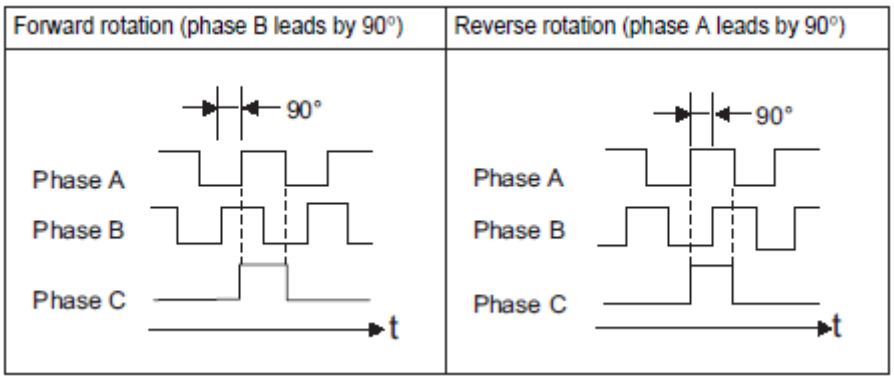

Note: The pulse width for phase C (origin pulse) changes according to the setting of the encoder output pulses (Pn212) and becomes the same as that for phase A.
Even in reverse rotation mode (Pn000.0 = 1), the output phase form is the same as that for the standard setting (Pn000.0 = 0) above.

IMPORTANT

If using the DRIVER's phase-C pulse output for a zero point return, rotate the servomotor two or more times before starting a zero point return. If the servomotor cannot be rotated two or more times, perform a zero point return at a motor speed of 600 min^{-1} or below. If the motor speed is faster than 600 min^{-1}, the phase-C pulse may not be output correctly.

4.4.5 Setting Encoder Output Pulse

Set the encoder output pulse using the following parameter.

Pn212	Encoder Output Pulses			Speed Position Torque	Classification
	Setting Range	Setting Unit	Factory Setting	When Enabled	
	16 to 1073741824	1 P/rev	2048	After restart	Setup

Pulses from the encoder per revolution are divided inside the DRIVER by the number set in this parame- ter before being output. Set the number of encoder output pulses according to the system specifications of the machine or host PC or PLC...etc.

According to the encoder resolution, the number of encoder output pulses are limited.

Setting Range of Encoder Output Pulses (P/Rev)	Setting Unit	Encoder Resolution	Upper Limit of Servomotor Speed for Set Encoder Output Pulses (min^{-1})
		20 bits (1,048,576 pulses)	
16 to 2048	1	–	6000
16 to 16384	1	○	6000
16386 to 32768	2	○	3000
32772 to 65536	4	○	1500
65544 to 131072	8	○	750
131088 to 262144	16	○	375

Note 1. The setting range varies with the encoder resolution for the servomotor used.
An encoder output pulse setting error (A.041) will occur if the setting is outside the allowable range or does not satisfy the setting conditions.
Pn212 = 25000 (P/Rev) is accepted, but
Pn212 = 25001 (P/Rev) is not accepted. The alarm A.041 is output because the setting unit differs from that in the above table.

2. The upper limit of the pulse frequency is approx. 1.6 Mpps.
The servomotor speed is limited if the setting value of the encoder output pulses (Pn212) is large.
An overspeed of encoder output pulse rate alarm (A.511) will occur if the motor speed exceeds the upper limit specified in the above table.

Output Example: When Pn212 = 16 (16-pulse output per one revolution), PAO and PBO are output as shown below.

Preset value: 16

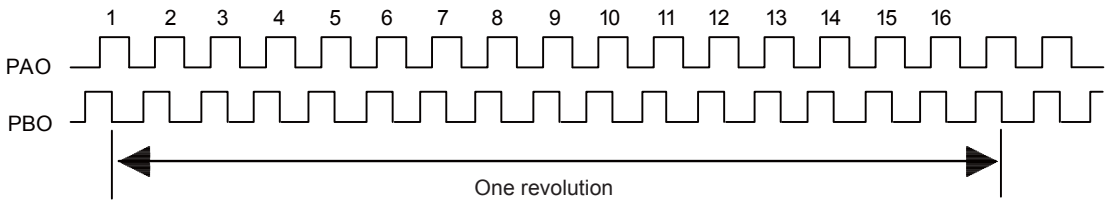

4.5 Test Without Motor Function

The test without a motor is used to check the operation of the host PC or PLC...etc and peripheral devices by simulating the operation of the servomotor in the DRIVER, i.e., without actually operating a servomotor. This function enables you to check wiring, verify the system while debugging, and verify parameters, thus shortening the time required for setup work and preventing damage to the machine that may result from possible mal- functions. The operation of the motor can be checked during performing this function regardless of whether the motor is actually connected or not.

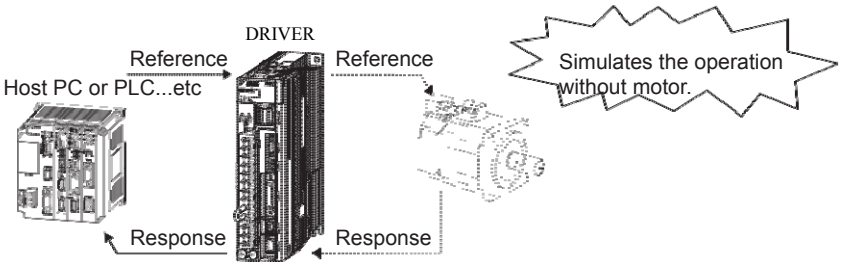

Use Pn00C.0 to enable or disable the test without a motor.

Parameter		Meaning	When Enabled	Classification
Pn00C	n.□□□0 [Factory setting]	Disables the test without a motor.	After restart	Setup
	n.□□□1	Enables the test without a motor.		

4.5.1 Motor Information

The motor information that is used for a test without a motor is given below.

(1) When Motor is Connected

If a motor is connected, the information from the connected motor is used for the motor and encoder scale information. The set values of Pn00C.1 and Pn00C.2 are not used.

(2) When Motor is Not Connected

The information for the virtual motor that is stored in the DRIVER is used. The set values of Pn00C.1 and Pn00C.2 are used for the encoder information.

-Encoder Resolution

The encoder information for the motor is set in Pn00C.1.

Parameter		Meaning	When Enabled	Classification
Pn00C	n.□□0□ [Factory setting]	Sets the encoder resolution for the test without a motor to 13 bits.	After restart	Setup
	n.□□1□	Sets the encoder resolution for the test without a motor to 20 bits.		

-Encoder Type

The encoder information for the motor is set in Pn00C.2.

Parameter		Meaning	When Enabled	Classification
Pn00C	n.□0□□ [Factory setting]	Sets an incremental encoder as an encoder type for the test without a motor.	After restart	Setup
	n.□1□□	Sets an absolute encoder as an encoder type for the test without a motor.		

4.5.2 Motor Position and Speed Responses

For the test without a motor, the following responses are simulated for references from the host PC or PLC...etc according to the gain settings for position or speed control.

- Servomotor position
- Servomotor speed

The load model, however, will be a rigid system with the moment of inertia ratio that is set in Pn103.

4.5.3 Limitations

The following functions cannot be used during the test without a motor.

- Regeneration and dynamic brake operation
- Brake output signal (The brake output signal can be checked with the I/O signal monitor function of the SigmaWin+.)
- Items marked with "×" in the following utility function table.

Contents	Can be used or not	
	Motor not connected	Motor connected
Alarm history display	○	○
JOG operation	○	○
Origin search	○	○
Program JOG operation	○	○
Initializing parameter settings	○	○
Clearing alarm history	○	○
Absolute encoder multiturn reset and encoder alarm reset	×	○
Offset adjustment of analog monitor output	○	○
Gain adjustment of analog monitor output	○	○
Automatic offset-signal adjustment of the motor current detection signal	×	○
Manual offset-signal adjustment of the motor current detection signal	×	○
Write prohibited setting	○	○
Product Information display	○	○
Multiturn limit value setting change when a multiturn limit disagreement alarm occurs	×	○
Resetting configuration error in option modules	○	○
Vibration detection level initialization	×	×
Origin setting	×	○
Software reset	○	○
Tuning-less levels setting	×	×
Advanced autotuning	×	×
Advanced autotuning by reference	×	×
One-parameter tuning	×	×
Anti-resonance control adjustment function	×	×
Vibration suppression function	×	×
EasyFFT	×	×
Online vibration monitor	×	×

Note: ○: Can be used
× : Cannot be used

4.6 Limiting Torque

The DRIVER provides the following four methods for limiting output torque to protect the machine.

Limiting Method	Description	Reference Section
Internal torque limit	Always limits torque by setting the parameter.	4.6.1
External torque limit	Limits torque by input signal from the host PC or PLC...etc.	4.6.2
Torque limit with the command data (TLIM) *	Limits torque by using the command data (TLIM) for torque limiting function settable commands.	–
Torque limit with P_CL and N_CL signals of the servo command output signals (SVCMD_IO) *	Limits torque by using P_CL and N_CL signals of the servo command output signals (SVCMD_IO).	–

∗ For details, refer to *8 MECHATROLINK-III Commands*.

Note: The maximum torque of the servomotor is used when the set value exceeds the maximum torque.

4.6.1 Internal Torque Limit

This function always limits maximum output torque by setting values of following parameters.

Pn402	Forward Torque Limit			Speed Position Torque	Classification
	Setting Range	Setting Unit	Factory Setting	When Enabled	
	0 to 800	1%	800	Immediately	Setup
Pn403	Reverse Torque Limit			Speed Position Torque	Classification
	Setting Range	Setting Unit	Factory Setting	When Enabled	
	0 to 800	1%	800	Immediately	Setup

The setting unit is a percentage of the rated torque.

Note: If the settings of Pn402 and Pn403 are too low, the torque may be insufficient for acceleration or deceleration of the servomotor.

Torque waveform

No Internal Torque Limit (Maximum torque can be output)	Internal Torque Limit
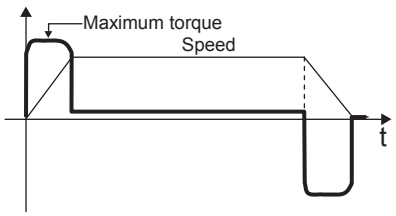	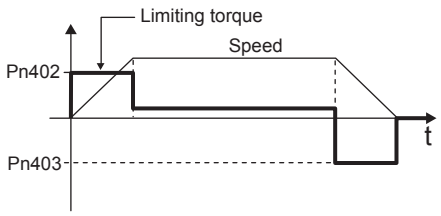

4.6.2 External Torque Limit

Use this function to limit torque by inputting a signal from the host PC or PLC...etc at specific times during machine operation. For example, some pressure must continually be applied (but not enough to damage the workpiece) when the robot is holding a workpiece or when a device is stopping on contact.

(1) Input Signals

Use the following input signals to limit a torque by external torque limit.

Type	Signal Name	Connector Pin Number	Setting	Meaning	Limit value
Input	/P-CL	Must be allocated	ON (closed)	Forward external torque limit ON	The smaller value of these settings: Pn402 or Pn404
			OFF (open)	Forward external torque limit OFF	Pn402
Input	/N-CL	Must be allocated	ON (closed)	Reverse external torque limit ON	The smaller value of these settings: Pn403 or Pn405
			OFF (open)	Reverse external torque limit OFF	Pn403

Note: Use parameter Pn50B.2 and Pn50B.3 to allocate the /P-CL signal and the /N-CL signal for use. For details, refer to *3.3.1 Input Signal Allocations.*

(2) Related Parameters

Set the following parameters for external torque limit.

Pn402	Forward Torque Limit		Speed Position Torque		Classification
	Setting Range	Setting Unit	Factory Setting	When Enabled	
	0 to 800	1%	800	Immediately	Setup
Pn403	Reverse Torque Limit		Speed Position Torque		Classification
	Setting Range	Setting Unit	Factory Setting	When Enabled	
	0 to 800	1%	800	Immediately	Setup
Pn404	Forward External Torque Limit		Speed Position Torque		Classification
	Setting Range	Setting Unit	Factory Setting	When Enabled	
	0 to 800	1%	100	Immediately	Setup
Pn405	Reverse External Torque Limit		Speed Position Torque		Classification
	Setting Range	Setting Unit	Factory Setting	When Enabled	
	0 to 800	1%	100	Immediately	Setup

The setting unit is a percentage of the rated torque.

Note: If the settings of Pn402, Pn403, Pn404, and Pn405 are too low, the torque may be insufficient for acceleration or deceleration of the servomotor.

(3) Changes in Output Torque during External Torque Limiting

The following diagrams show the change in output torque when the internal torque limit is set to 800%. In this example, the servomotor rotation direction is Pn000.0 = 0 (Sets CCW as forward direction).

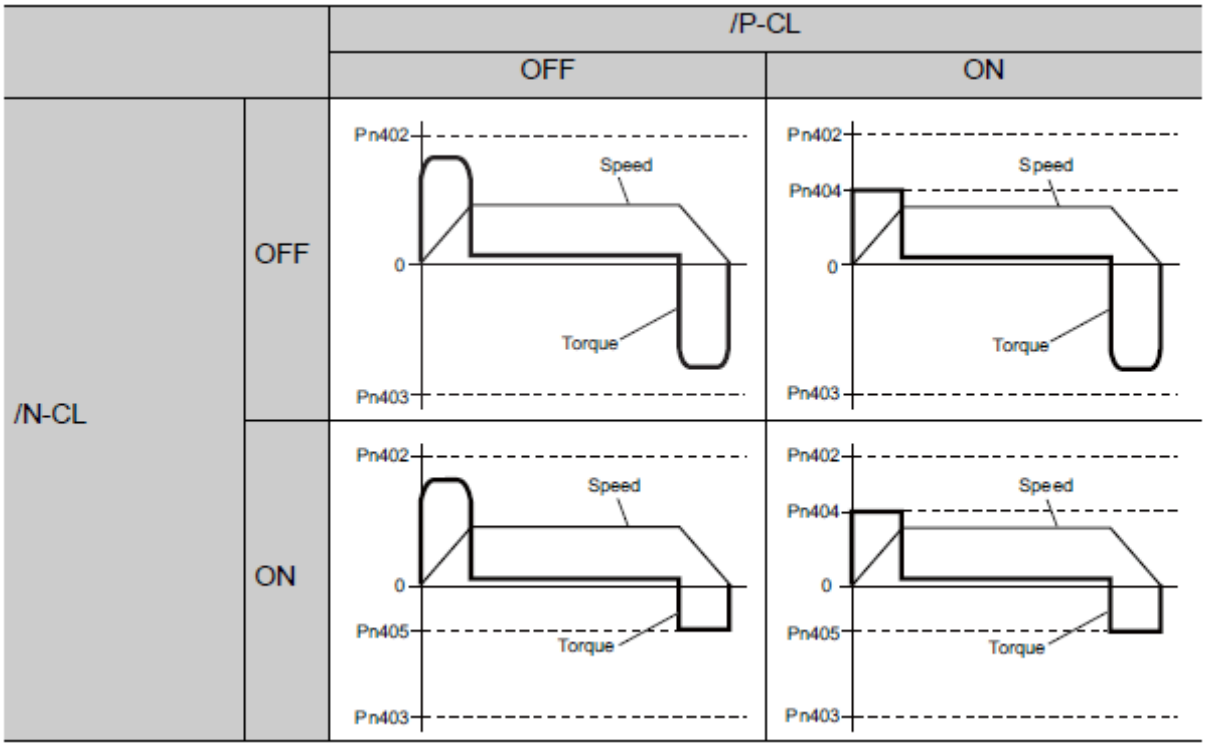

4.6.3 Checking Output Torque Limiting during Operation

The following signal can be output to indicate that the servomotor output torque is being limited.

Type	Signal Name	Connector Pin Number	Setting	Meaning
Output	/CLT	Must be allocated	ON (closed)	Servomotor output torque is being limited.
			OFF (open)	Servomotor output torque is not being limited.

Note: Use parameter Pn50F.0 to allocate the /CLT signal for use. For details, refer to *3.3.2 Output Signal Allocations*.

4.7 Absolute Encoders

If using an absolute encoder, a system to detect the absolute position can be designed for use with the host PC or PLC...etc. As a result, an operation can be performed without a zero point return operation immediately after the power is turned ON.

A battery case is required to save position data in the absolute encoder. The battery is attached to the battery case of the encoder cable.

Set Pn002.2 to 0 (factory setting) to use the absolute encoder.

Parameter		Meaning	When Enabled	Classification
Pn002	n.□0□□ [Factory setting]	Uses the absolute encoder as an absolute encoder.	After restart	Setup
	n.□1□□	Uses the absolute encoder as an incremental encoder.		

A battery is not required when using the absolute encoder as an incremental encoder.

4.7.1 Connecting the Absolute Encoder

The following diagram shows the connection between a servomotor with an absolute encoder, the DRIVER, and the host PC or PLC...etc.

(1) Using an Encoder Cable with a Battery Case

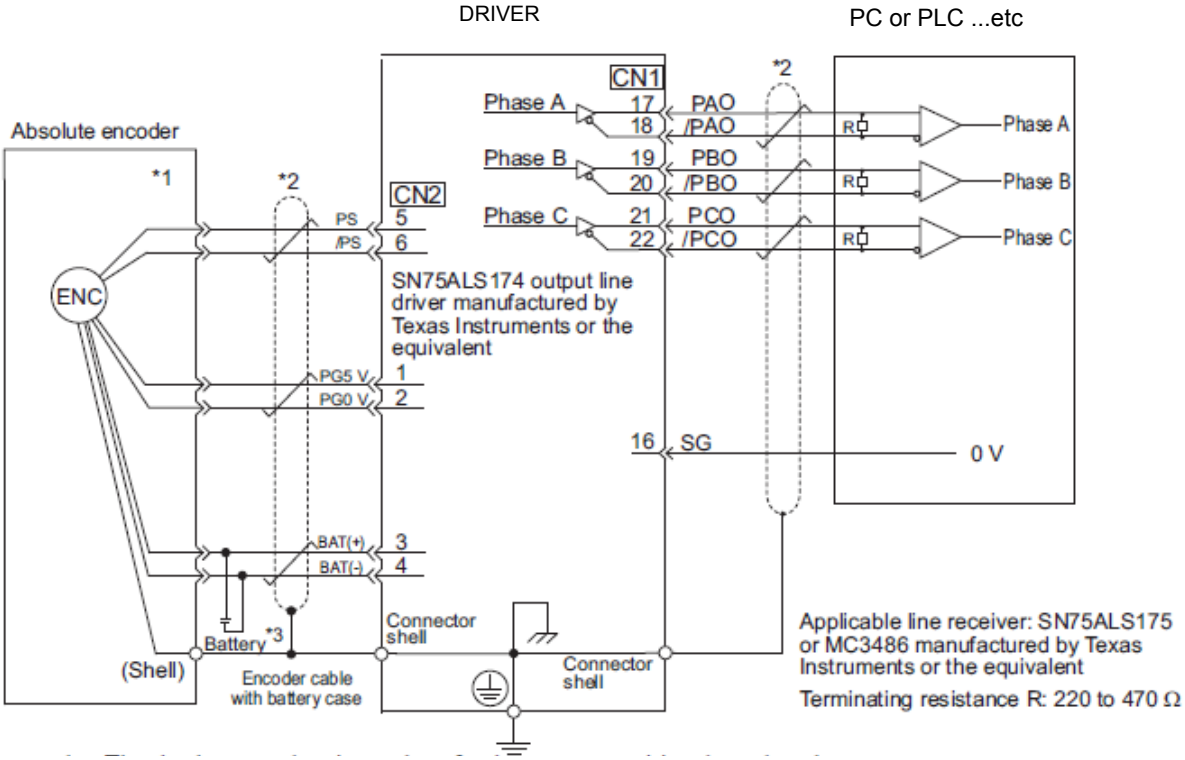

∗1. The absolute encoder pin numbers for the connector wiring depend on the servomotors.

∗2. : represents shielded twisted-pair wires.

∗3. When using an absolute encoder, provide power by installing an encoder cable with a Battery Case.

4.7.2 Absolute Data Request (SENS ON Command)

The Turn Sensor ON command (SENS_ON) must be sent to obtain absolute data as an output from the DRIVER.

The SENS_ON command is sent at the following timing.

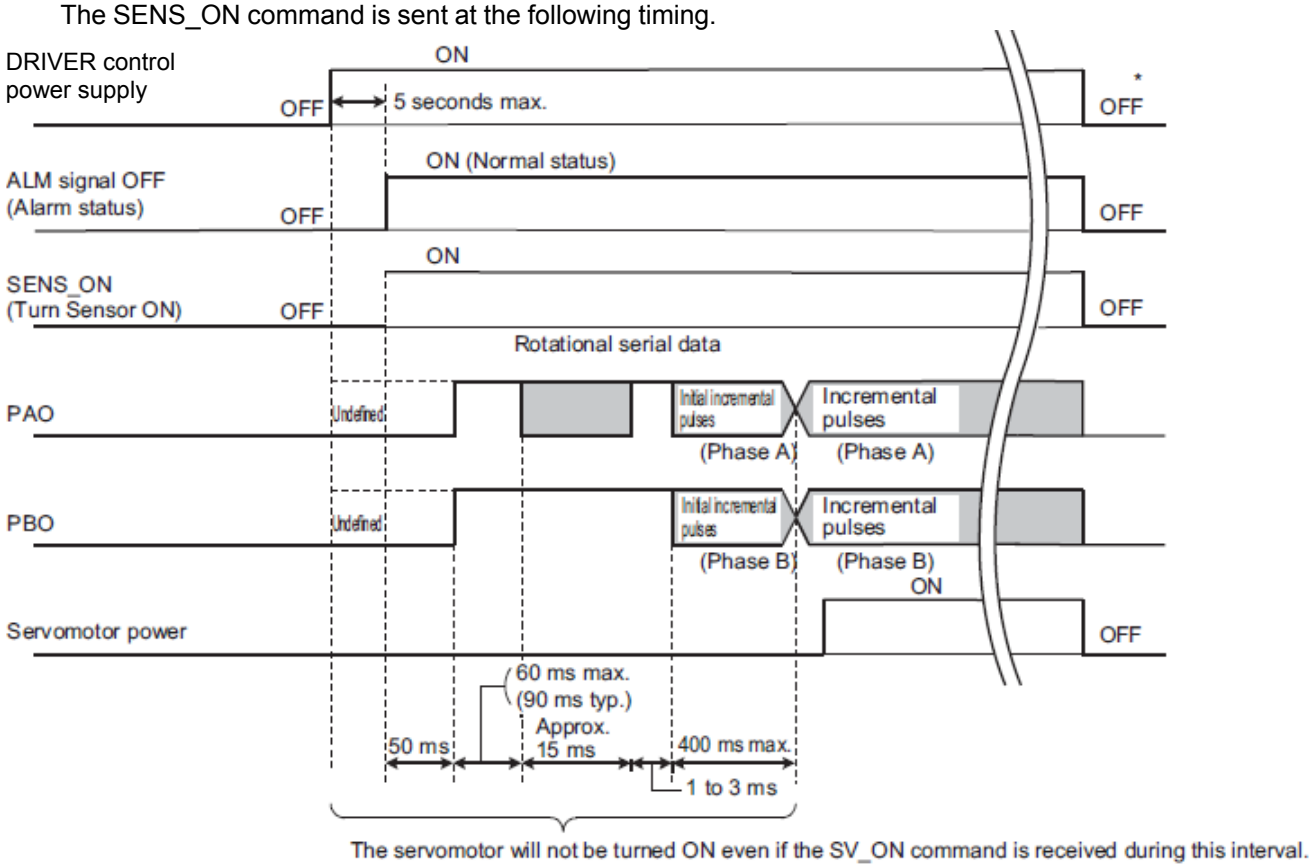

∗ Send the SENS_OFF command to turn OFF the control power supply.

4.7.3 Battery Replacement

If the battery voltage drops to approximately 2.7 V or less, an absolute encoder battery error alarm (A.830) or an absolute encoder battery error warning (A.930) will be displayed.

If this alarm or warning is displayed, replace the batteries using the following procedure.
Use Pn008.0 to set either an alarm (A.830) or a warning (A.930).

Parameter		Meaning	When Enabled	Classification
Pn008	n.□□□0 [Factory setting]	Outputs the alarm A.830 when the battery voltage drops.	After restart	Setup
	n.□□□1	Outputs the warning A.930 when the battery voltage drops.		

- If Pn008.0 is set to 0, alarm detection will be enabled for 4 seconds after the ALM signal outputs max. 5 sec- onds when the control power is turned ON.
  No battery-related alarm will be displayed even if the battery voltage drops below the specified value after these 4 seconds.
- If Pn008.0 is set to 1, alarm detection will be always enabled after the ALM signal outputs max. 5 seconds when the control power supply is turned ON.

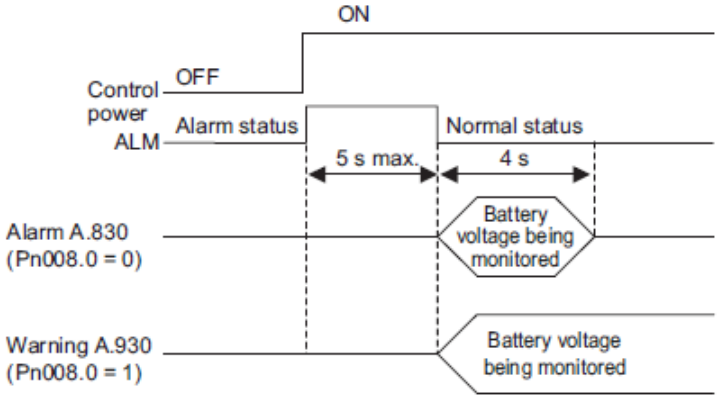

(1) Battery Replacement Procedure

1. Turn ON the control power supply of the DRIVER only.
2. Open the battery case cover.

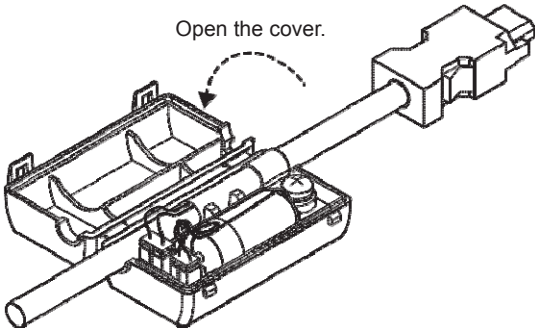

3. Remove the old battery and mount the new LEC-JZ-CVBAT battery as shown below.

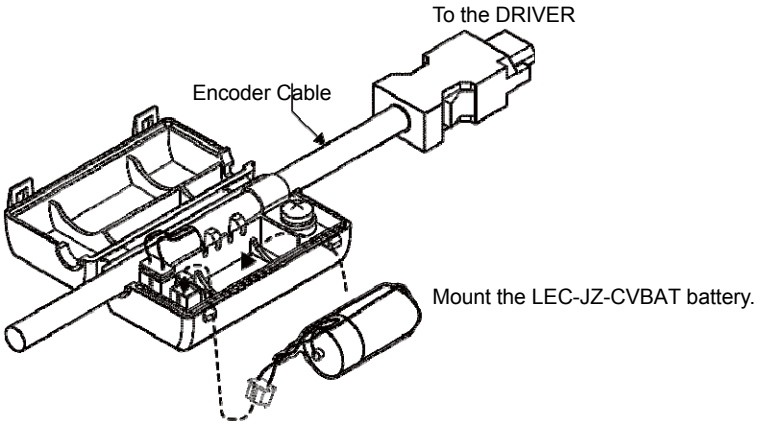

4. Close the battery case cover.

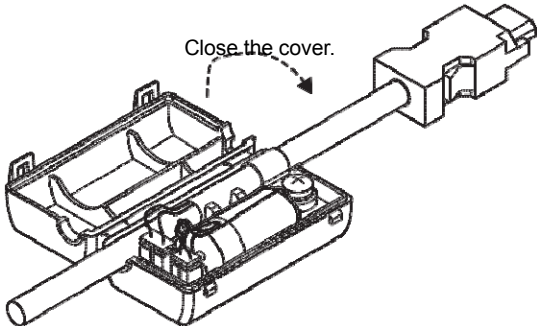

5. After replacing the battery, turn OFF the control power supply to clear the absolute encoder battery error alarm (A.830).
6. Turn ON the control power supply again.
7. Check that the alarm display has been cleared and that the DRIVER operates normally.

IMPORTANT	If the DRIVER control power supply is turned OFF and the battery is disconnected (which includes disconnecting the encoder cable), the absolute encoder data will be deleted.

4.7.4 Absolute Encoder Setup and Reinitialization

⚠ CAUTION

- The rotational data will be a value between -2 and +2 rotations when the absolute encoder setup is executed. The reference position of the machine system will change. Set the reference position of the host PC or PLC...etc to the position after setup.
  If the machine is started without adjusting the position of the host PC or PLC...etc, unexpected operation may cause injury or damage to the machine. Take sufficient care when operating the machine.

Setting up and reinitialization of the absolute encoder are necessary in the following cases.

- When starting the machine for the first time
- When an encoder backup error alarm (A.810) is generated
- When an encoder checksum error alarm (A.820) is generated
- When initializing the rotational serial data of the absolute encoder

Set up the absolute encoder with Fn008.

(1) Precautions on Setup and Reinitialization

- The write prohibited setting parameter (Fn010) must be set to Write permitted (P.0000).
- Set up or reinitialize the encoder when the servomotor power is OFF.
- If the following absolute encoder alarms are displayed, cancel the alarm by using the same method as the set up (initializing) with Fn008. They cannot be canceled with the DRIVER Clear Warning or Alarm command (ALM_CLR).
  - Encoder backup error alarm (A.810)
  - Encoder checksum error alarm (A.820)
- Any other alarms (A.8□□) that monitor the inside of the encoder should be canceled by turning OFF the power.

(2) Procedure for Setup and Reinitialization

Follow the steps below to setup or reinitialize the absolute encoder.

This setting can be performed using the Write Memory command (MEM_WR). For details, refer to *8 MECHATROLINK-III Commands*.

In the SigmaWin+ Σ-V component main window, click **Setup**, point to **Set Absolute Encoder** and click **Reset Absolute Encoder**.

For more information on the usage of the SigmaWin+, refer to AC Servo Drives Engineering Tool Sigma Win+ ONLINE MANUAL Σ-V Component *4.4.2 Setting the Absolute Encoder.*

4.7.5 Multiturn Limit Setting

The multiturn limit setting is used in position control applications for a turntable or other rotating device. For example, consider a machine that moves the turntable in the following diagram in only one direction.

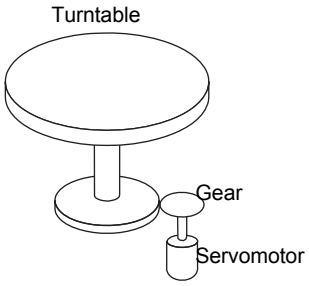

Because the turntable moves in only one direction, the upper limit for revolutions that can be counted by an absolute encoder will eventually be exceeded. The multiturn limit setting is used in cases like this to prevent fractions from being produced by the integral ratio of the motor revolutions and turntable revolutions.

For a machine with a gear ratio of n:m, as shown above, the value of m minus 1 will be the setting for the multiturn limit setting (Pn205).

Multiturn limit setting (Pn205) = m-1

The case in which the relationship between the turntable revolutions and motor revolutions is m = 100 and n = 3 is shown in the following graph.

Pn205 is set to 99.

Pn205 = 100 − 1 = 99

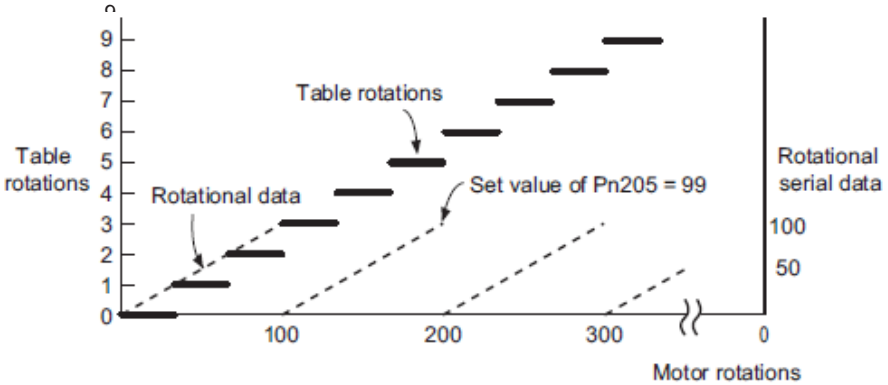

Pn205	Multiturn Limit Setting			Speed Position Torque	Classification
	Setting Range	Setting Unit	Factory Setting	When Enabled	
	0 to 65535	1 Rev	65535	After restart	Setup

Note: This parameter is valid when the absolute encoder is used.

The range of the data will vary when this parameter is set to anything other than the factory setting.

1. When the motor rotates in the reverse direction with the rotational data at 0, the rotational data will change to the setting of Pn205.
2. When the motor rotates in the forward direction with the rotational data at the Pn205 setting, the rotational data will change to 0.

Set the value, the desired rotational amount -1, to Pn205.

Factory Setting (= 65535)	Other Setting (≠65535)
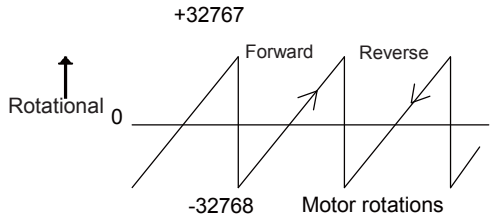	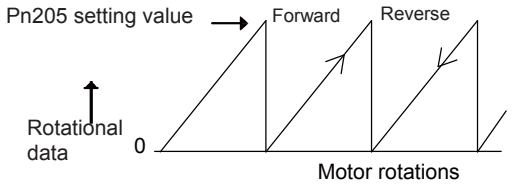

4.7.6 Multiturn Limit Disagreement Alarm (A.CC0)

When the multiturn limit set value is changed with parameter Pn205, a multiturn limit disagreement alarm (A.CC0) will be displayed because the value differs from that of the encoder.

Alarm Display	Alarm Name	Alarm Output	Meaning
A.CC0	Multiturn Limit Disagreement	OFF (H)	Different multiturn limits have been set in the encoder and DRIVER.

If this alarm is displayed, perform the operation described below and change the multiturn limit value in the encoder to the value set in Pn205.

This setting can be performed using the Write Memory command (MEM_WR). For details, refer to *Σ-V Series User's Manual MECHATROLINK-III Standard Servo Profile Commands* (No: SIEP S800000 63).

This setting can be performed with the adjustment command (ADJ).
For information the adjustment command (ADJ), refer to *8 MECHATROLINK-III Commands*.

In the SigmaWin+ Σ-V component main window, click **Setup**, print to **Set Absolute Encoder** and click **Multi-Turn Limit Setting**.

For more information on the usage of the SigmaWin+, refer to AC Servo Drives Engineering Tool Sigma Win+ ONLINE MANUAL Σ-V Component *4.4.2 Setting the Absolute Encoder.*

4.7.7 Absolute Encoder Origin Offset

If using the absolute encoder, the positions of the encoder and the offset of the machine coordinate system (APOS) can be set. Use Pn808 to make the setting. After the SENS_ON command is received by MECHA-TROLINK communications, this parameter will be enabled.

Pn808	Absolute Encoder Origin Offset		Position		Classification
	Setting Range	Setting Unit	Factory Setting	When Enabled	
	-1073741823 to 1073741823	1 reference unit	0	Immediately	Setup

<Example>
If the encoder position (X) is set at the origin of the machine coordinate system (0), Pn808 = X.

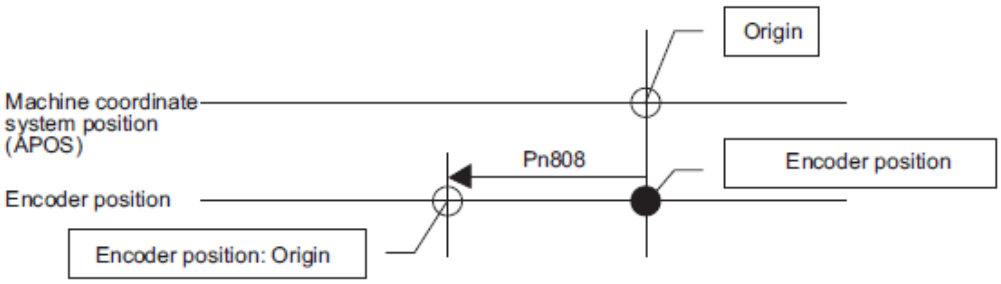

4.7.8 Absolute Data Reception Sequence

The sequence in which the DRIVER receives outputs from the absolute encoder and transmits them to host controller is shown below.

(1) Outline of Absolute Data

The serial data, pulses, etc., of the absolute encoder that are output from the DRIVER are output from the PAO, PBO, and PCO signals as shown below.

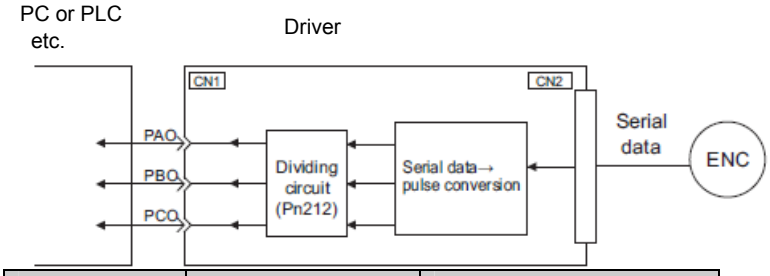

Signal Name	Status	Contents
PAO	At initialization	Rotational serial data Initial incremental pulses
	Normal Operations	Incremental pulses
PBO	At initialization	Initial incremental pulses
	Normal Operations	Incremental pulses
PCO	Always	Origin pulses

・Phase-C Output Specifications

The pulse width of phase C (origin pulse) changes depending on the encoder output pulse (Pn212), becoming the same width as phase A.
The output timing is one of the following.

- Synchronized with the rising edge of phase A
- Synchronized with the falling edge of phase A
- Synchronized with the rising edge of phase B
- Synchronized with the falling edge of phase B

Note: When host controller receives the data of absolute encoder, do not perform counter reset using the output of PCO signal.

(2) Absolute Data Reception Sequence

1. Send the Turn Sensor ON (SENS_ON) command from the host controller.
2. After 100 ms, the system is set to rotational serial data reception standby and the incremental pulse up/ down counter is cleared to zero.
3. Eight characters of rotational serial data is received.
4. The system enters a normal incremental operation state about 400 ms after the last rotational serial data is received.

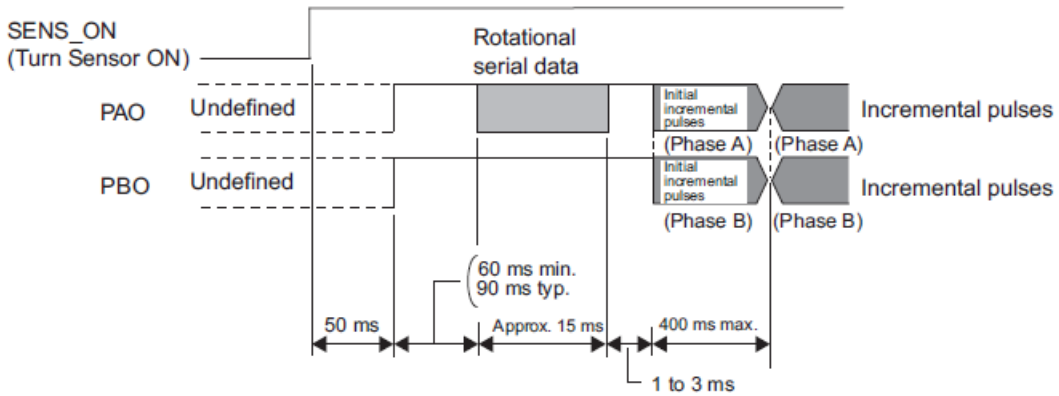

Note: The output pulses are phase-B advanced if the servomotor is turning forward regardless of the setting in Pn000.0.

Rotational serial data:

Indicates how many turns the motor shaft has made from the reference position, which was the position at setup.

Initial incremental pulses:

Initial incremental pulses which provide absolute data are the number of pulses required to rotate the motor shaft from the servomotor origin to the present position.
Just as with normal incremental pulses, these pulses are divided by the dividing circuit inside the DRIVER and then output.

The initial incremental pulse speed depends on the setting of the encoder output pulses (Pn212). Use the following formula to obtain the initial incremental pulse speed.

Setting of the Encoder Output Pulses (Pn212)	Formula of the Initial Incremental Pulse Speed
16 to 16384	(680 × Pn212) / 16384 [kpps]
16386 to 32768	(680 × Pn212) / 32768 [kpps]
32772 to 65536	(680 × Pn212) / 65536 [kpps]
65544 to 131072	(680 × Pn212) / 131072 [kpps]
131088 to 262144	(680 × Pn212) / 262144 [kpps]

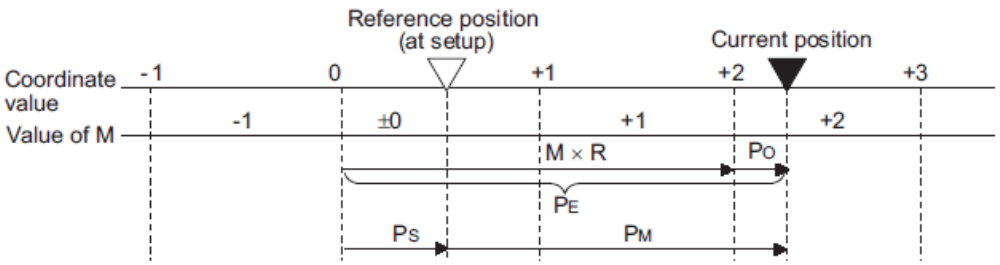

Final absolute data PM is calculated by following formula.

$P_E = M \times R + P_O$

$P_S = M_S \times R + P_S'$

$P_M = P_E - P_S$

Signal	Meaning
P_E	Current value read by encoder
M	Rotational serial data
P_O	Number of initial incremental pulses
P_S	Absolute data read at setup (This is saved and controlled by the host controller.)
M_S	Rotational data read at setup
P_S'	Number of initial incremental pulses read at setup
P_M	Current value required for the user's system
R	Number of pulses per encoder revolution (pulse count after dividing, value of Pn212)

Note: The following formula applies in reverse mode. (Pn000.0 = 1)

$P_E = -M \times R + P_O$

$P_S = M_S \times R + P_S'$

$P_M = P_E - P_S$

(3) Rotational Serial Data Specifications and Initial Incremental Pulses

・Rotational Serial Data Specifications

The rotational serial data is output from PAO signal.

Data Transfer Method	Start-stop Synchronization (ASYNC)
Baud rate	9600 bps
Start bits	1 bit
Stop bits	1 bit
Parity	Even
Character code	ASCII 7-bit code
Data format	8 characters, as shown below. 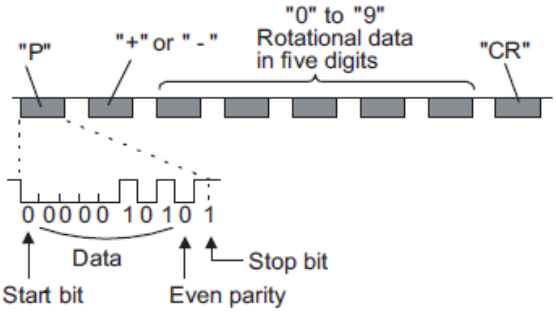 Note 1. Data is "P+00000" (CR) or "P-00000" (CR) when the number of revolutions is zero. 2. The revolution range is "-32768" to "+32767". When this range is exceeded, the data changes from "+32767" to "-32678" or from "-32678" to "+32767". When changing multiturn limit, the range changes. For details, refer to *4.7.5 Multiturn Limit Setting*.

・Initial Incremental Pulses

The initial incremental pulses are output after division inside the DRIVER in the same way as for normal incremental pulses. Refer to *4.4.4 Encoder Output Pulses* for details.

(4) Transferring Alarm Contents

If an absolute encoder is used, the contents of alarms detected by the DRIVER are transmitted in serial data to the host controller from the PAO output when the Turn Sensor OFF command (SENS_OFF) is received.

Note: The SENS_OFF command cannot be received while the servomotor power is ON.

Output example of alarm contents are as shown below.

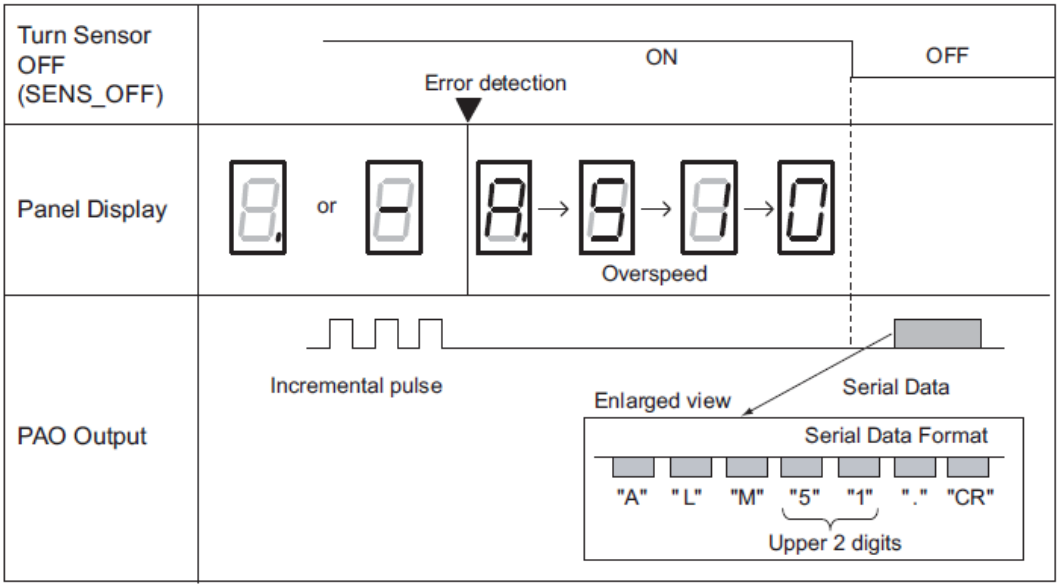
Turn Sensor OFF (SENS_OFF)
ON
OFF
Error detection
Panel Display
or
Overspeed
PAO Output
Incremental pulse
Serial Data
Enlarged view
Serial Data Format
"A"
"L"
"M"
"5"
"1"
"."
"CR"
Upper 2 digits

4.8 Other Output Signals

This section explains other output signals.

Use these signals according to the application needs, e.g., for machine protection.

4.8.1 Servo Alarm Output Signal (ALM)

This section describes signals that are output when the DRIVER detects errors and resetting methods.

(1) Servo Alarm Output Signal (ALM)

This signal is output when the DRIVER detects an error.

IMPORTANT

Configure an external circuit so that this alarm output turns OFF the main circuit power supply for the DRIVER whenever an error occurs.

Type	Signal Name	Connector Pin Number	Setting	Meaning
Output	ALM	CN1-3, 4	ON (closed)	Normal DRIVER status
			OFF (open)	DRIVER alarm status

(2) Alarm Reset Method

If a servo alarm (ALM) occurs, use one of the following methods to reset the alarm after eliminating the cause of the alarm.

IMPORTANT

Be sure to eliminate the cause of the alarm before resetting it.

If the alarm is reset and operation continued without eliminating the cause of the alarm, it may result in damage to the equipment or fire.

- Resetting Alarms by Sending Clear Warning or Alarm Command (ALM_CLR)

  For details, refer to 8 MECHATROLINK-III Commands.

- Resetting Alarms Using the SigmaWin+

  In the SigmaWin+ Σ-V component main window, click **Alarm** and then click **Display Alarm**. To clear an alarm, click **Reset** after removing the cause of the alarm.
  For more information on the usage of the SigmaWin+, refer to AC Servo Drives Engineering Tool Sigma Win+ ONLINE MANUAL Σ-V Component *4. 2 Alarm Display.*

4.8.2 Warning Output Signal (/WARN)

This signal is for a warning issued before the occurrence of an alarm. Refer to *9.2.1 List of Warnings*.

(1) Signal Specifications

Type	Signal Name	Connector Pin Number	Setting	Meaning
Output	/WARN	Must be allocated	ON (closed)	Warning status
			OFF (open)	Normal status

Note: Use parameter Pn50F.3 to allocate the /WARN signal for use. For details, refer to *3.3.2 Output Signal Allocations*.

4.8.3 Rotation Detection Output Signal (/TGON)

This output signal indicates that the servomotor is rotating at the speed set for Pn502 or a higher speed.

(1) Signal Specifications

Type	Signal Name	Connector Pin Number	Setting	Meaning
Output	/TGON	Must be allocated	ON (closed)	Servomotor is rotating with the motor speed above the setting in Pn502.
			OFF (open)	Servomotor is rotating with the motor speed below the setting in Pn502.

Note: Use parameter Pn50E.2 to allocate the /TGON signal for use. For details, refer to *3.3.2 Output Signal Allocations*.

(2) Related Parameter

Set the range in which the /TGON signal is output using the following parameter.

Pn502	Rotation Detection Level			Speed Position Torque	Classification
	Setting Range	Setting Unit	Factory Setting	When Enabled	
	1 to 10000	1 min^{-1}	20	Immediately	Setup

4.8.4 Servo Ready Output Signal (/S-RDY)

This signal is turned ON when the DRIVER is ready to accept the servo ON (SV_ON) command. The /S-RDY signal is turned ON under the following conditions.
- The main circuit power supply is ON.
- No hard wire base block state
- No servo alarms
- The Turn Sensor ON (SENS_ON) command is received. (When an absolute encoder is used.)

If an absolute encoder is used, the output of absolute data to the host PC or PLC...etc must have been completed when the SENS_ON command is received.

For details on the hard wire base block function, refer to *4.9.1 Hard Wire Base Block (HWBB) Function*.

(1) Signal Specifications

Type	Signal Name	Connector Pin Number	Setting	Meaning
Output	/S-RDY	Must be allocated	ON (closed)	The SERVOPACK is ready to accept the SV_ON command.
			OFF (open)	The SERVOPACK is not ready to accept the SV_ON command.

Note 1. Use parameter Pn50E.3 to allocate the /S-RDY signal for use. For details, refer to *3.3.2 Output Signal Allocations*.

2. For details on the hard wire base block function and the servo ready output signal, refer to *4.9.1 Hard Wire Base Block (HWBB) Function*.

4.8.5 Speed Coincidence Output Signal (/V-CMP)

The speed coincidence output signal (/V-CMP) is output when the actual servomotor speed is the same as the reference speed. The host PC or PLC...etc uses the signal as an interlock. This signal is the output signal during speed control.

Type	Signal Name	Connector Pin Number	Setting	Meaning
Output	/V-CMP	Must be allocated	ON (closed)	Speed coincides.
			OFF (open)	Speed does not coincide.

Note: Use parameter Pn50E.1 to allocate the /V-CMP signal for use. Refer to *3.3.2 Output Signal Allocations* for details.

Pn503	Speed Coincidence Signal Output Width		Speed		Classification
	Setting Range	Setting Unit	Factory Setting	When Enabled	
	0 to 100	1 min^{-1}	10	Immediately	Setup

The /V-CMP signal is output when the difference between the reference speed and actual motor speed is below this setting.

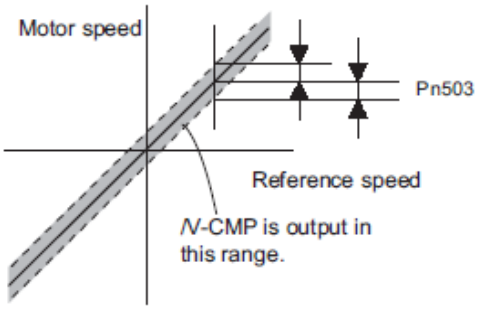

<Example>
The /V-CMP signal is output at 1900 to 2100 min^{-1} if the Pn503 is set to 100 and the reference speed is 2000 min^{-1}.

4.8.6 Positioning Completed Output Signal (/COIN)

This signal indicates that servomotor movement has been completed during position control.

When the difference between the number of references output by the host PC or PLC...etc and the travel distance of the servomotor (position error) drops below the set value in the parameter, the positioning completion signal will be output.

Use this signal to check the completion of positioning from the host PC or PLC...etc.

Type	Signal Name	Connector Pin Number	Setting	Meaning
Output	/COIN	Must be allocated	ON (closed)	Positioning has been completed.
			OFF (open)	Positioning is not completed.

Note: Use parameter Pn50E.0 to allocate the /COIN signal for use. Refer to *3.3.2 Output Signal Allocations* for details.

Pn522	Positioning Completed Width			Position	Classification
	Setting Range	Setting Unit	Factory Setting	When Enabled	
	0 to 1073741824	1 reference unit	7	Immediately	Setup

The positioning completed width setting has no effect on final positioning accuracy.

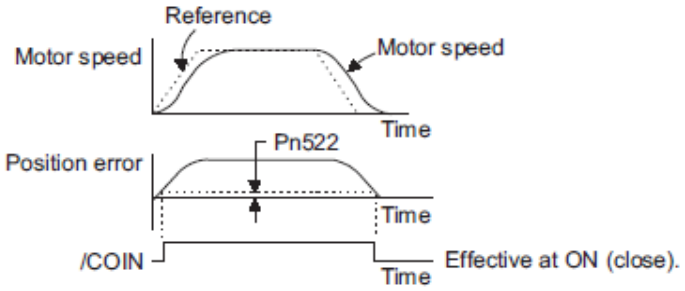

Note: If the parameter is set to a value that is too large, a positioning completed signal might be output if the position error is low during a low speed operation. This will cause the positioning completed signal to be output continuously. If this signal is output unexpectedly, reduce the set value until it is no longer output.

If the position error is kept to a minimum when the positioning completed width is small, use Pn207.3 to change output timing for the /COIN signal.

Parameter		Name	Meaning	When Enabled	Classification
Pn207	n.0□□□ [Factory setting]	/COIN Output Timing	When the absolute value of the position error is below the positioning completed width (Pn522).	After restart	Setup
	n.1□□□		When the absolute value of the position error is below the positioning completed width (Pn522), and the reference after applying the position reference filter is 0.		
	n.2□□□		When the absolute value of the position error is below the positioning completed width (Pn522), and the position reference input is 0.		

4.8.7 Positioning Near Output Signal (/NEAR)

Before confirming that the positioning completed signal has been received, the host PC or PLC...etc first receives a positioning near signal and can prepare the operating sequence after positioning has been completed. The time required for this sequence after positioning can be shortened.

This signal is generally used in combination with the positioning completed output signal.

Type	Signal Name	Connector Pin Number	Setting	Meaning
Output	/NEAR	Must be allocated	ON (closed)	The servomotor has reached a point near to positioning completed.
			OFF (open)	The servomotor has not reached a point near to positioning completed.

Note: Use parameter Pn510.0 to allocate the /NEAR signal for use. Refer to *3.3.2 Output Signal Allocations* for details.

Pn524	NEAR Signal Width			Position	Classification
	Setting Range	Setting Unit	Factory Setting	When Enabled	
	1 to 1073741824	1 reference unit	1073741824	Immediately	Setup

The positioning near signal (/NEAR) is output when the difference between the number of references output by the host PC or PLC...etc and the travel distance of the servomotor (position error) is less than the set value.

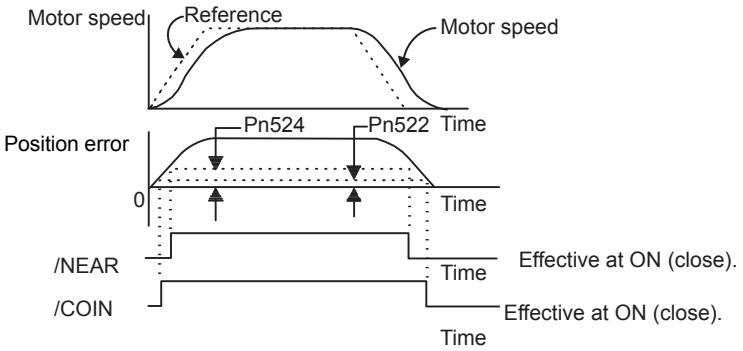

Note: Normally, the value of Pn524 should be larger than that for the positioning completed width (Pn522).

4.8.8 Speed Limit Detection Signal (/VLT)

This function limits the speed of the servomotor to protect the machine.

A servomotor in torque control is controlled to output the specified torque, but the motor speed is not controlled. Therefore, if an excessive reference torque is set for the load torque on the machinery side, the speed of the servomotor may increase greatly. If that may occur, use this function to limit the speed.

Note: The actual limit value of motor speed depends on the load conditions of the servomotor.

With No Speed Limit	With Speed Limit
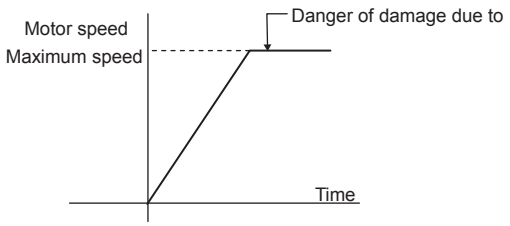	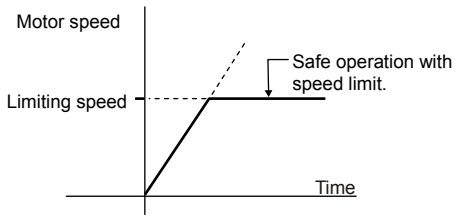

Refer to the following parameters for speed limit.

(1) Signals Output during Servomotor Speed Limit

The following signal is output when the motor speed reaches the limit speed.

Type	Signal Name	Connector Pin Number	Setting	Meaning
Output	/VLT	Must be allocated	ON (closed)	Servomotor speed limit being applied.
			OFF (open)	Servomotor speed limit not being applied.

Note: Use parameter Pn50F.1 to allocate the /VLT signal for use. For details, refer to *3.3.2 Output Signal Allocations*.

(2) Speed Limit Setting

Select the speed limit mode with Pn002.1.

Parameter		Meaning	When Enabled	Classification
Pn002	n.□□0□ [Factory setting]	VLIM (the speed limit value during torque control) is not available. Uses the value set in Pn407 as the speed limit (internal speed limit function).	After restart	Setup
	n.□□1□	VLIM operates as the speed limit value (external speed limit function).		

- Internal Speed Limit Function

If the internal speed limit function is selected in Pn002.1, set the limit of the maximum speed of the servomotor in Pn407. The limit of the speed in Pn408.1 can be either the maximum speed of the servomotor or the overspeed alarm detection speed. Select the overspeed alarm detection speed to limit the speed to the maxi- mum speed of the servomotor or the equivalent.

Pn407	Speed Limit During Torque Control Torque				Classification
	Setting Range	Setting Unit	Factory Setting	When Enabled	
	0 to 10000	1 min^{-1}	10000	Immediately	Setup

Note: The servomotor's maximum speed or the overspeed alarm detection speed will be used when the setting in this parameter exceeds the maximum speed of the servomotor used.

Parameter		Meaning	When Enabled	Classification
Pn408	n.□□0□ [Factory setting]	Uses the smaller value of the maximum motor speed and the value of Pn407 as the speed limit value.	After restart	Setup
	n.□□1□	Uses the smaller value of the overspeed alarm detec-tion speed and the value of Pn407 as speed limit value.		

- External Speed Limit Function

If the external speed limit function is selected in Pn002.1, the motor speed is controlled by the speed limit value (VLIM). For details, refer to *8 MECHATROLINK-III Commands*.

4.9 Safety Function

The safety function is incorporated in the DRIVER to reduce the risk associated with the machine by protecting workers from injury and by securing safe machine operation. Especially when working in hazardous areas inside the safeguard, as for machine maintenance, it can be used to avoid adverse machine movement.

4.9.1 Hard Wire Base Block (HWBB) Function

The Hard Wire Base Block function (hereinafter referred to as HWBB function) is a safety function designed to baseblock the servomotor (shut off the motor current) by using the hardwired circuits. Each circuit for two channel input signals blocks the run signal to turn off the power module that controls the motor current, and the motor current is shut off. (Refer to the diagram below.)

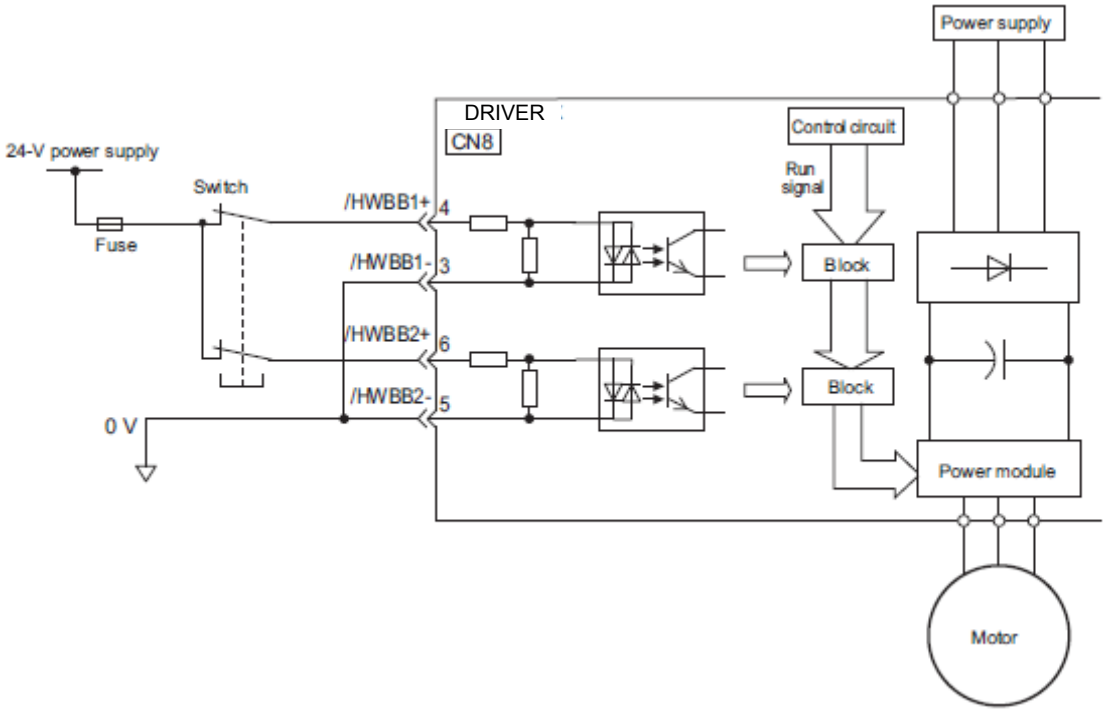

IMPORTANT	For safety function signal connections, the input signal is the 0 V common and the output signal is the source output. This is the opposite of other signals described in this manual. To avoid confusion, the ON and OFF status of signals for safety functions are defined as follows: ON: The state in which the relay contacts are closed or the transistor is ON and current flows into the signal line. OFF: The state in which the relay contacts are open or the transistor is OFF and no current flows into the signal line.

(1) Risk Assessment

When using the HWBB function, be sure to perform a risk assessment of the servo system in advance. Make sure that the safety level of the standards is met. For details about the standards, refer to *Harmonized Standards* at the front of this manual.

Note: To meet the performance level d (PLd) in EN ISO 13849-1, the EDM signal must be monitored by a host PC or PLC...etc.If the EDM signal is not monitored by a host PC or PLC...etc, the system only qualifies for the performance level c (PLc).

The following risks can be estimated even if the HWBB function is used. These risks must be included in the risk assessment.

- The servomotor will move in an application where external force is applied to the servomotor (for example, gravity on the vertical axis). Take measures to secure the servomotor, such as installing a mechanical brake.
- The servomotor may move within the electric angle of 180 degrees in case of the power module failure, etc. Make sure that safety is ensured even in that situation. The rotation angle depends on the motor type. The maximum rotation angle is given below.
  Rotational motor: 1/6 rotation max. (rotation angle at the motor shaft)
- The HWBB function does not shut off the power to the DRIVER or electrically isolate it. Take measures to shut off the power to the DRIVER when performing maintenance on it.

(2) Hard Wire Base Block (HWBB) State

The DRIVER will be in the following state if the HWBB function operates. If the /HWBB1 or /HWBB2 signal is OFF, the HWBB function will operate and the DRIVER will enter a hard wire baseblock (HWBB) state.

The HWBB function operates after the servomotor power is turned OFF.

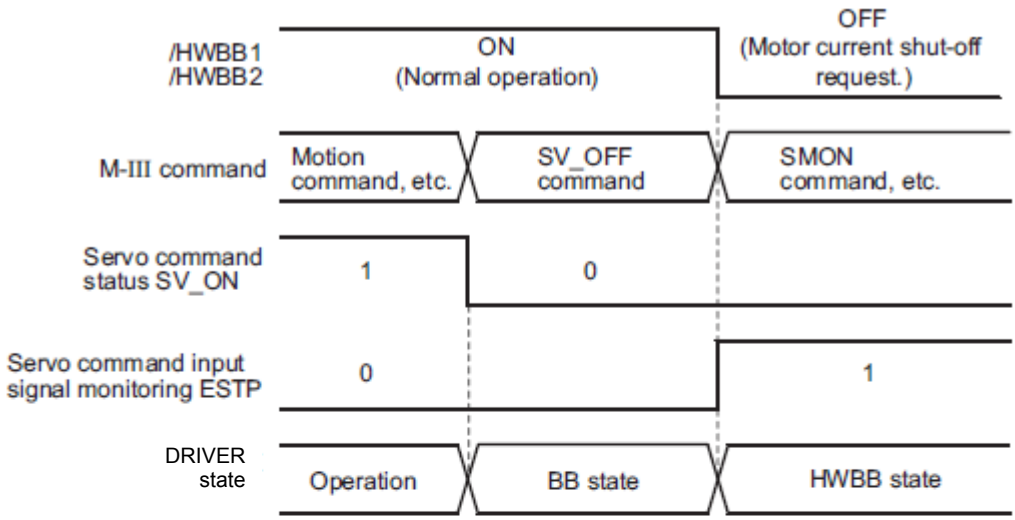

The HWBB function operates while the servomotor power is ON.

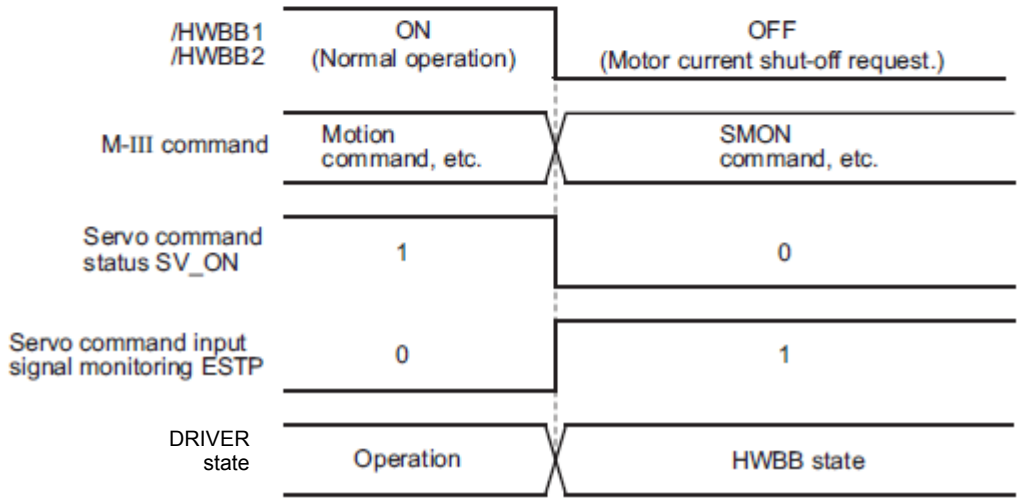

(3) Resetting the HWBB State

Usually after the servo OFF command (SV_OFF: 32H) is received and the servomotor power is OFF, the DRIVER will then enter a hard wire baseblock (HWBB) state with the /HWBB1 and /HWBB2 signals turned OFF. By then turning the /HWBB1 and /HWBB2 signals ON in this state, the DRIVER will enter a baseblock (BB) state and can accept the servo ON command (SV_ON: 31H).

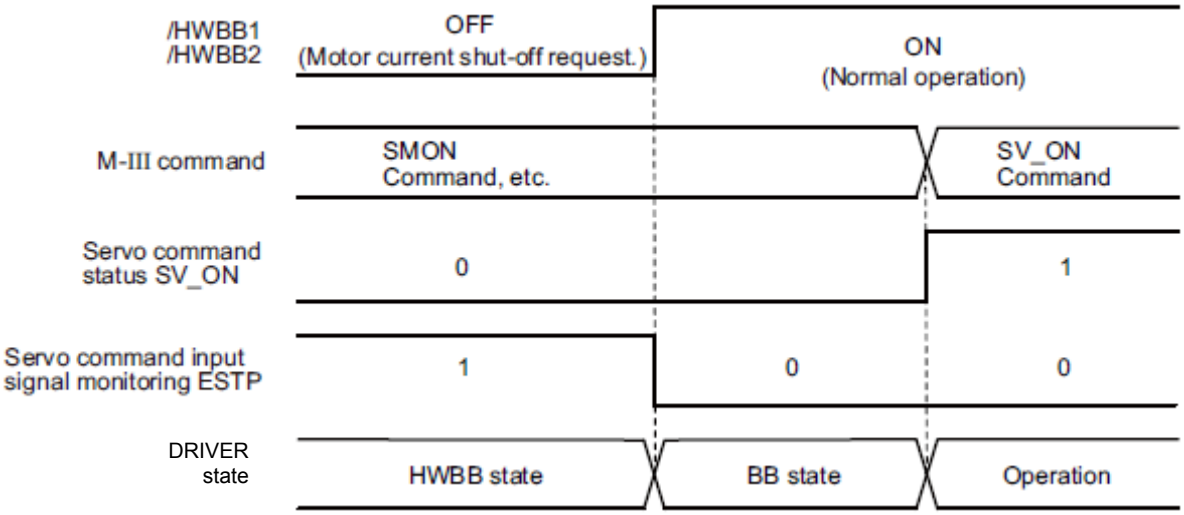

If the /HWBB1 and /HWBB2 signals are OFF and the servo ON command is received, the HWBB state will be maintained after the /HWBB1 and /HWBB2 signals are turned ON.

Send the servo OFF command, and the DRIVER is placed in a BB state. Then send the servo ON command again.

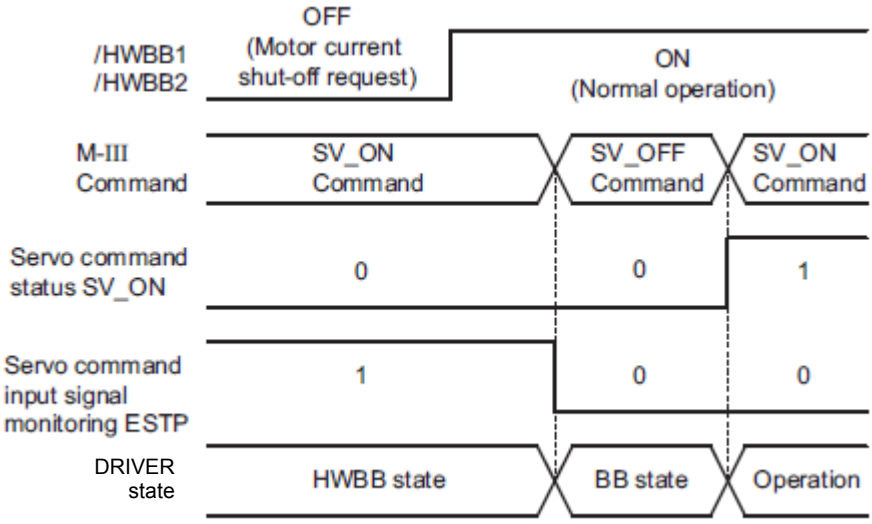

Note: Even if the servomotor power is turned OFF by turning OFF the main circuit power, the HWBB status is retained until a servo OFF command is received.

(4) Related Commands

If the HWBB function is working with the /HWBB1 or /HWBB2 signal turned OFF, the setting of ESTP of the servo command input signal monitoring changes to 1, so the status of the upper level apparatus can be known by looking at the setting of this bit.

If the status becomes HWBB status during the execution of the next command, a command warning is issued.
If a warning is given, clear the alarm to return to normal operational status. After stopping or canceling the action command, using the sequence of commands to return to the HWBB status is recommended.

Object Action Commands
Servo ON (SV_ON)
Interpolating (INTERPORATE)
Positioning (POSING)
Constant speed feed (FEED)
Constant speed feed with position detection function (EX_FEED)
Interpolating with position detection function (LATCH)
External input positioning (EX_POSING)
Homing (ZRET)

(5) Error Detection in HWBB Signal

If only the /HWBB1 or /HWBB2 signal is input, an A.Eb1 alarm (Safety Function Signal Input Timing Error) will occur unless the other signal is input within 10 seconds. This makes it possible to detect failures, such as disconnection of the HWBB signals.

⚠ CAUTION

- The safety function signal input timing error alarm (A.Eb1) is not a safety-related part of a control system. Keep this in mind in the system design.

(6) Connection Example and Specifications of Input Signals (HWBB Signals)

The input signals must be redundant. A connection example and specifications of input signals (HWBB signals) are shown below.

IMPORTANT

For safety function signal connections, the input signal is the 0 V common and the output signal is the source output. This is opposite to other signals described in this manual. To avoid confusion, the ON and OFF status of signals for safety functions are defined as follows:

ON: The state in which the relay contacts are closed or the transistor is ON and current flows into the signal line.

OFF: The state in which the relay contacts are open or the transistor is OFF and no current flows into the signal line.

- Connection Example

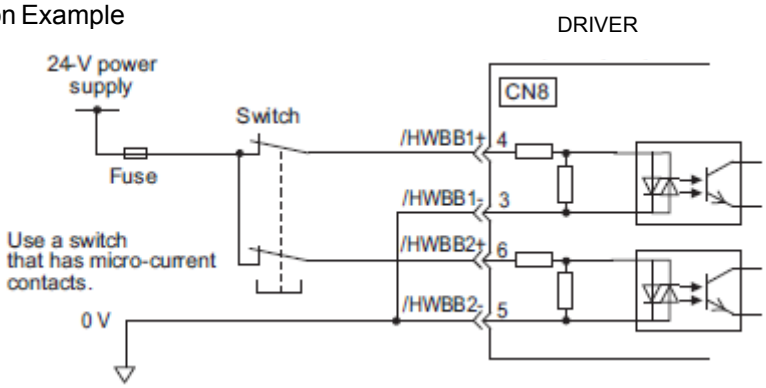

- Specifications

Type	Signal Name	Connector Pin Number	Setting	Meaning
Input	/HWBB1	CN8-4 CN8-3	ON (closed)	Does not use the HWBB function. (normal operation)
			OFF (open)	Uses the HWBB function. (motor current shut-off request)
	/HWBB2	CN8-6 CN8-5	ON (closed)	Does not use the HWBB function. (normal operation)
			OFF (open)	Uses the HWBB function. (motor current shut-off request)

The input signals (HWBB signals) have the following electrical characteristics.

Items	Characteristics	Remarks
Internal Impedance	3.3 kΩ	–
Operation Movable Voltage Range	+11 V to + 25 V	–
Maximum Delay Time	20 ms	Time from the /HWBB1 and /HWBB2 signals are OFF to the HWBB function operates.

If the HWBB function is requested by turning OFF the /HWBB1 and /HWBB2 input signals on the two channels, the power supply to the servomotor will be turned OFF within 20 ms (see below).

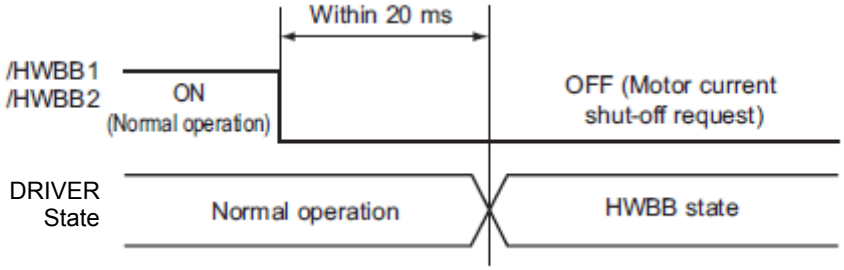

Note 1. The OFF status is not recognized if the total OFF time of the /HWBB1 and /HWBB2 signals is 0.5 ms or shorter.

2. The status of the input signals can be checked using monitor displays. Refer to *7.5 Monitoring Safety Input Signals*.

(7) Operation with Utility Functions

The HWBB function works while the DRIVER operates in the utility function.

If any of the following utility functions is being used with the /HWBB1 and /HWBB2 signals turned OFF, the DRIVER cannot be operated by turning ON the /HWBB1 and /HWBB2 signals. Cancel the utility function first, and then set the DRIVER to the utility function again and restart operation.

- JOG operation (Fn002)
- Origin search (Fn003)
- Program JOG operation (Fn004)
- Advanced autotuning (Fn201)
- EasyFFT (Fn206)
- Automatic offset-signal adjustment of motor current detection signal (Fn00E)

(8) Servo Ready Output (/S-RDY)

The servo ON (SV_ON) command will not be accepted in the HWBB state. Therefore, the servo ready output will turn OFF. The servo ready output will turn ON if the servomotor power is OFF (set to BB state) when both the /HWBB1 and /HWBB2 signals are ON.

The following diagram shows an example where the main circuit power supply is turned ON, the Turn Sensor ON (SENS_ON) command is sent (with an absolute encoder), and no servo alarm occurs.

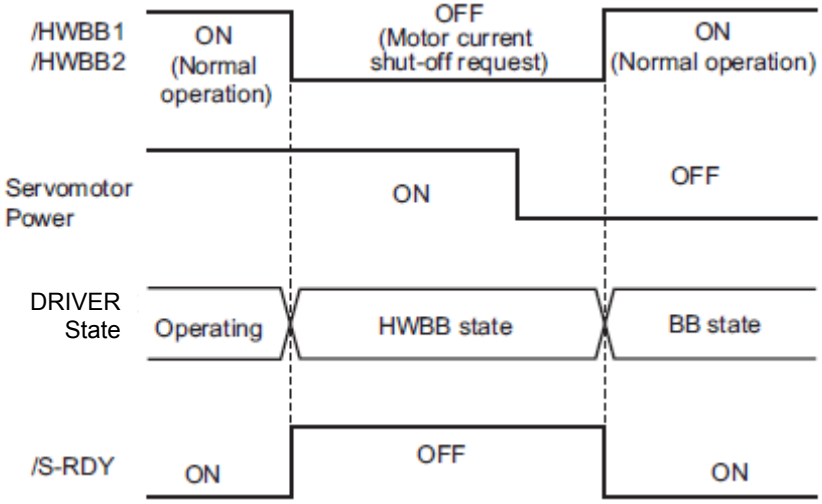

(9) Lock signal (/BK)

When the /HWBB1 or /HWBB2 signal is OFF and the HWBB function operates, the lock signal (/BK) will turn OFF. At that time, Pn506 (lock Reference - servo OFF delay time) will be disabled. Therefore, the servo- motor may be moved by external force until the actual lock becomes effective after the lock signal (/BK) turns OFF.

⚠ CAUTION

- The lock signal is not a safety-related part of a control system. Be sure to design the system so that the system will not be put into danger if the lock signal fails in the HWBB state. Moreover, if a servomotor with a lock is used, keep in mind that the lock for the servomotor is used only to prevent the movable part from being moved by gravity or an external force and it cannot be used to lock the servomotor.

(10) Dynamic Brake

If the dynamic brake is enabled in Pn001.0 (Stopping Method for Servomotor after SV_OFF Command is Received), the servomotor will come to a stop under the control of the dynamic brake when the HWBB function works while the /HWBB1 or /HWBB2 signal is OFF.

⚠ CAUTION

- The dynamic brake is not a safety-related part of a control system. Be sure to design the system so that the system will not be put into danger if the servomotor coasts to a stop in the HWBB state. Usually, use a sequence in which the HWBB state occurs after the servomotor is stopped using the reference.
- If the application frequently uses the HWBB function, do not use the dynamic brake to stop the servomo-tor. Otherwise element deterioration in the DRIVER may result. To prevent internal elements from deteriorating, use a sequence in which the HWBB state occurs after the servomotor has come to a stop.

(11) Servo Alarm Output Signal (ALM)

In the HWBB state, the servo alarm output signal (ALM) is not sent.

4.9.2 External Device Monitor (EDM1)

The external device monitor (EDM1) functions to monitor failures in the HWBB function. Connect the monitor to feedback signals to the safety function device.

Note: To meet the performance level d (PLd) in EN ISO13849-1, the EDM signal must be monitored by a PC or PLC...etc. If the EDM signal is not monitored by a PC or PLC...etc, the system only qualifies for the performance level c (PLc).

- Failure Detection Signal for EDM1 Signal

The relation of the EDM1, /HWBB1, and /HWBB2 signals is shown below.

Detection of failures in the EDM1 circuit can be checked using the following four status of the EDM1 signal in the table. Failures can be detected if the failure status can be confirmed, e.g., when the power supply is turned ON.

Signal Name	Logic			
/HWBB1	ON	ON	OFF	OFF
/HWBB2	ON	OFF	ON	OFF
EDM1	OFF	OFF	OFF	ON

⚠ WARNING

- The EDM1 signal is not a safety output. Use it only for monitoring a failure.

(1) Connection Example and Specifications of EDM1 Output Signal

Connection example and specifications of EDM1 output signal are explained below.

IMPORTANT

For safety function signal connections, the input signal is the 0 V common and the output signal is the source output. This is opposite to other signals described in this manual. To avoid confusion, the ON and OFF status of signals for safety functions are defined as follows:

ON: The state in which the relay contacts are closed or the transistor is ON and current flows into the signal line.

OFF: The state in which the relay contacts are open or the transistor is OFF and no current flows into the signal line.

- Connection Example

EDM1 output signal is used for source circuit.EDM1 output signal can't use for sink circuit.

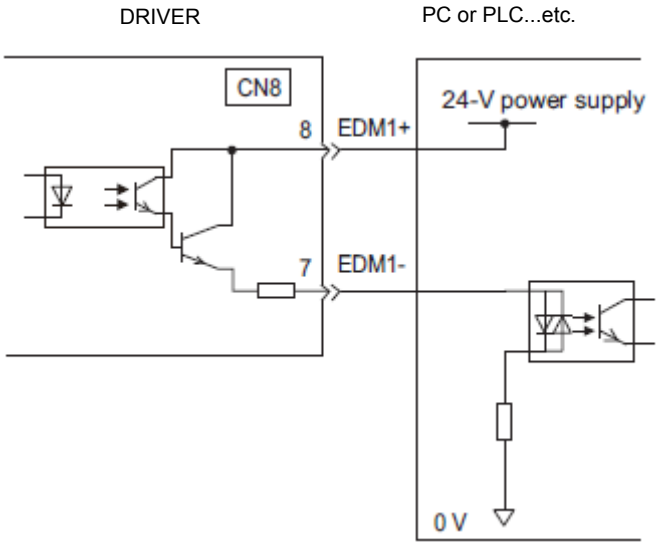

- Specifications

Type	Signal Name	Connector Pin Number	Setting	Meaning
Output	EDM1	CN8-8 CN8-7	ON (closed)	Both the /HWBB1 and the /HWBB2 signals are working normally.
			OFF (open)	The /HWBB1 signal, the /HWBB2 signal or both are not working normally.

Electrical characteristics of EDM1 signal are as follows.

Items	Characteristics	Remarks
Maximum Allowable Voltage	30 VDC	–
Maximum Current	50 mADC	–
Maximum Voltage Drop at ON	1.0 V	Voltage between EDM1+ and EDM1- when current is 50 mA
Maximum Delay Time	20 ms	Time from the change in /HWBB1 or /HWBB2 until the change in EDM1

4.9.3 Application Example of Safety Functions

An example of using safety functions is shown below.

(1) Connection Example

In the following example, a safety unit is used and the HWBB function operates when the guard opens.

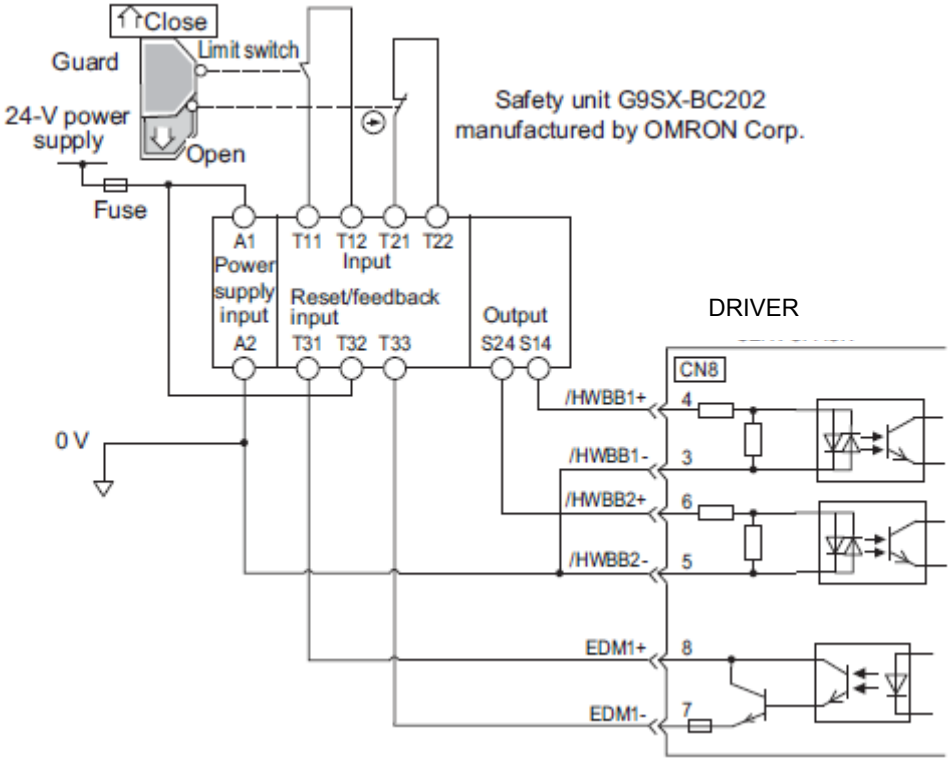

When a guard opens, both of signals, the /HWBB1 and the /HWBB2, turn OFF, and the EDM1 signal turns ON. Since the feedback is ON when the guard closes, the safety unit is reset, and the /HWBB1 and the / HWBB2 signals turn ON, and the operation becomes possible.

Note: The EDM1 signal is used as a sourcing output. Connect the EDM1 so that the current flows from EMD1+ to EMD1-.

(2) Failure Detection Method

In case of a failure such as the /HWBB1 or the /HWBB2 signal remains ON, the safety unit is not reset when the guard closes because the EDM1 signal keeps OFF. Therefore starting is impossible, then the failure is detected.

In this case, an error in the external device, disconnection or short-circuiting of the external wiring, or a failure in the DRIVER must be considered. Find the cause and correct the problem.

(3) Procedure

1	Request to open the guard.
2	When the servomotor is operating, the host controller stops the servomotor and sends the servo OFF command (SV_OFF).
3	Open the guard and enter.
4	The /HWBB1 and /HWBB2 signals are OFF and HWBB function operates. (The operation in the guard is available.)
5	After completing the operation, leave and close the guard.
6	The host controller sends the servo ON command (SV_ON).

4.9.4 Confirming Safety Functions

When starting the equipment or replacing the DRIVER for maintenance, be sure to conduct the following confirmation test on the HWBB function after wiring.

- When the /HWBB1 and /HWBB2 signals turn OFF, check that the digital operator displays "Hbb" and that the servomotor does not operate.
- Check with the display of the feedback circuit input of the connected device to confirm that the EDM1 signal is OFF while in normal operation.

4.9.5 Connecting a Safety Function Device

Connect a safety function device using the following procedure.

1. Remove the servomotor connection terminal connector while pressing the lock.
   Applicable DRIVERs: LECYU2-V5, V7, V8

   For DRIVER models not listed above, it is not necessary to remove the servomotor connection terminal connector. Go to step 2.

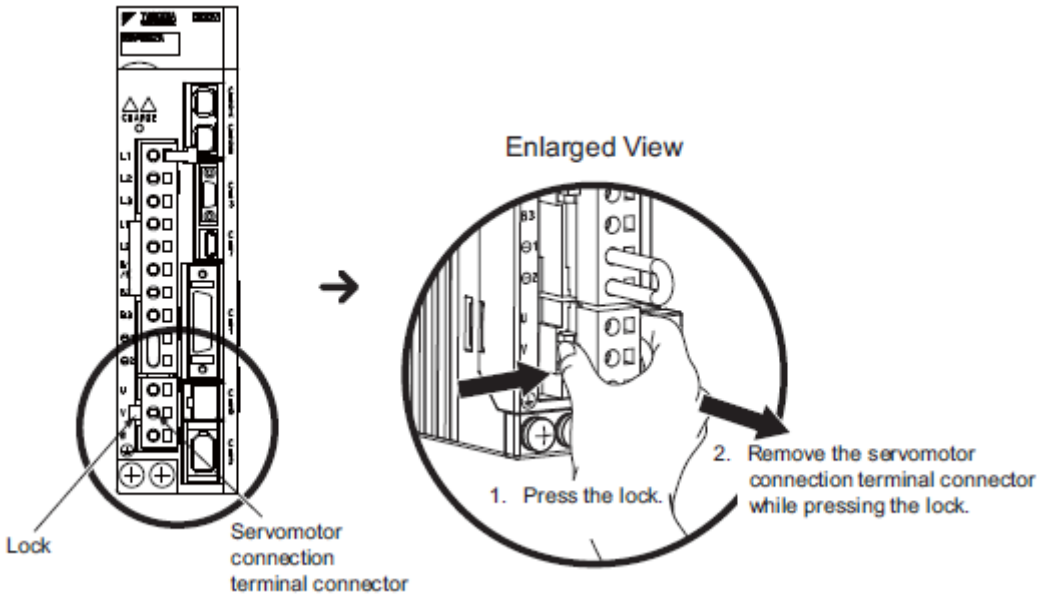

2. Remove the safety function's jumper connector from CN8.

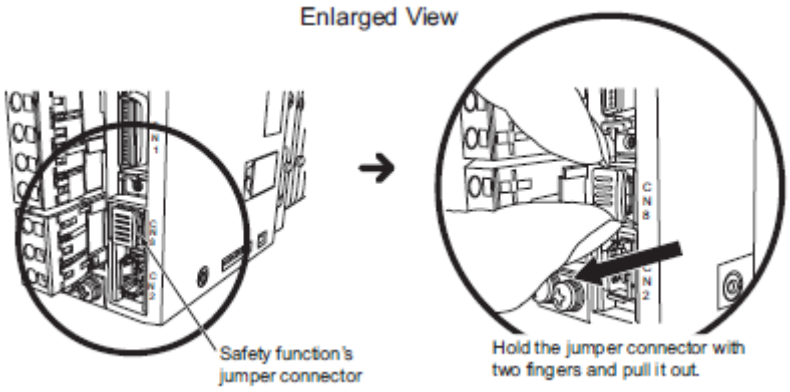

3. Connect a safety function device to CN8.
   Note: When not using the safety function, use the DRIVER with the safety function's jumper connector inserted in CN8. If the DRIVER is used without the jumper connector inserted into CN8, no current will flow to the servomotor and no torque will be output.

4.9.6 Precautions for Safety Function

⚠ WARNING

- To check that the HWBB function satisfies the safety requirements of the system, be sure to conduct a risk assessment of the system.

Incorrect use of the machine may cause injury.

- The servomotor rotates if there is external force (e.g., gravity in a vertical axis) when the HWBB function is operating. Therefore, use an appropriate device independently, such as a mechanical brake, that satisfies safety requirements.

Incorrect use of the machine may cause injury.

- While the HWBB function is operating, the motor may rotate within an electric angle of 180° or less as a result of a DRIVER failure. Use the HWBB function for applications only after checking that the rotation of the motor will not result in a dangerous condition.

Incorrect use of the machine may cause injury.

- The dynamic brake and the lock signal are not safety-related parts of a control system. Be sure to design the system that these failures will not cause a dangerous condition when the HWBB function operates. Incorrect use of the machine may cause injury.
- Connect devices meeting safety standards for the signals for safety functions.

Incorrect use of the machine may cause injury.

- If the HWBB function is used for an emergency stop, turn OFF the power supply to the servomotor with independent electric or mechanical parts.

Incorrect use of the machine may cause injury.

- The HWBB function does not shut off the power to the DRIVER or electrically isolate it. Take measures to shut off the power to the DRIVER when performing maintenance on it.

Failure to observe this warning may cause an electric shock.

5. Adjustments

5.1 Type of Adjustments and Basic Adjustment Procedure

This section describes type of adjustments and the basic adjustment procedure.

5.1.1 Adjustments

Adjustments (tuning) are performed to optimize the responsiveness of the DRIVER. The responsiveness is determined by the servo gain that is set in the DRIVER.
The servo gain is set using a combination of parameters, such as speed loop gain, position loop gain, filters, friction compensation, and moment of inertia ratio. These parameters influence each other. Therefore, the servo gain must be set considering the balance between the set values.

Generally, the responsiveness of a machine with high rigidity can be improved by increasing the servo gain. If the servo gain of a machine with low rigidity is increased, however, the machine will vibrate and the respon- siveness may not be improved. In such case, it is possible to suppress the vibration with a variety of vibration suppression functions in the DRIVER.

The servo gains are factory-set to appropriate values for stable operation. The following utility function can be used to adjust the servo gain to increase the responsiveness of the machine in accordance with the actual conditions. With this function, parameters related to adjustment above will be adjusted automatically and the need to adjust them individually will be eliminated.

This section describes the following utility adjustment functions.

Utility Function for Adjustment	Outline	Applicable Control Method
Tuning-less Levels Setting (Fn200)	This function is enabled when the factory settings are used. This function can be used to obtain a stable response regardless of the type of machine or changes in the load.	Speed and Position
Advanced Autotuning (Fn201)	The following parameters are automatically adjusted using internal references in the SERVOPACK during automatic operation. • Moment of inertia ratio • Gains (position loop gain, speed loop gain, etc.) • Filters (torque reference filter, notch filter) • Friction compensation • Anti-resonance control adjustment function • Vibration suppression function	Speed and Position
Advanced Autotuning by Reference (Fn202)	The following parameters are automatically adjusted with the position reference input from the host controller while the machine is in operation. • Gains (position loop gain, speed loop gain, etc.) • Filters (torque reference filter, notch filter) • Friction compensation • Anti-resonance control adjustment function • Vibration suppression function	Position
One-parameter Tuning (Fn203)	The following parameters are manually adjusted with the position or speed reference input from the host controller while the machine is in operation. • Gains (position loop gain, speed loop gain, etc.) • Filters (torque reference filter, notch filter) • Friction compensation • Anti-resonance control adjustment function	Speed and Position
Anti-Resonance Control Adjustment Function (Fn204)	This function effectively suppresses continuous vibration.	Speed and Position
Vibration Suppression Function (Fn205)	This function effectively suppresses residual vibration if it occurs when positioning.	Position

5.1.2 Basic Adjustment Procedure

The basic adjustment procedure is shown in the following flowchart. Make suitable adjustments considering the conditions and operating requirements of the machine.

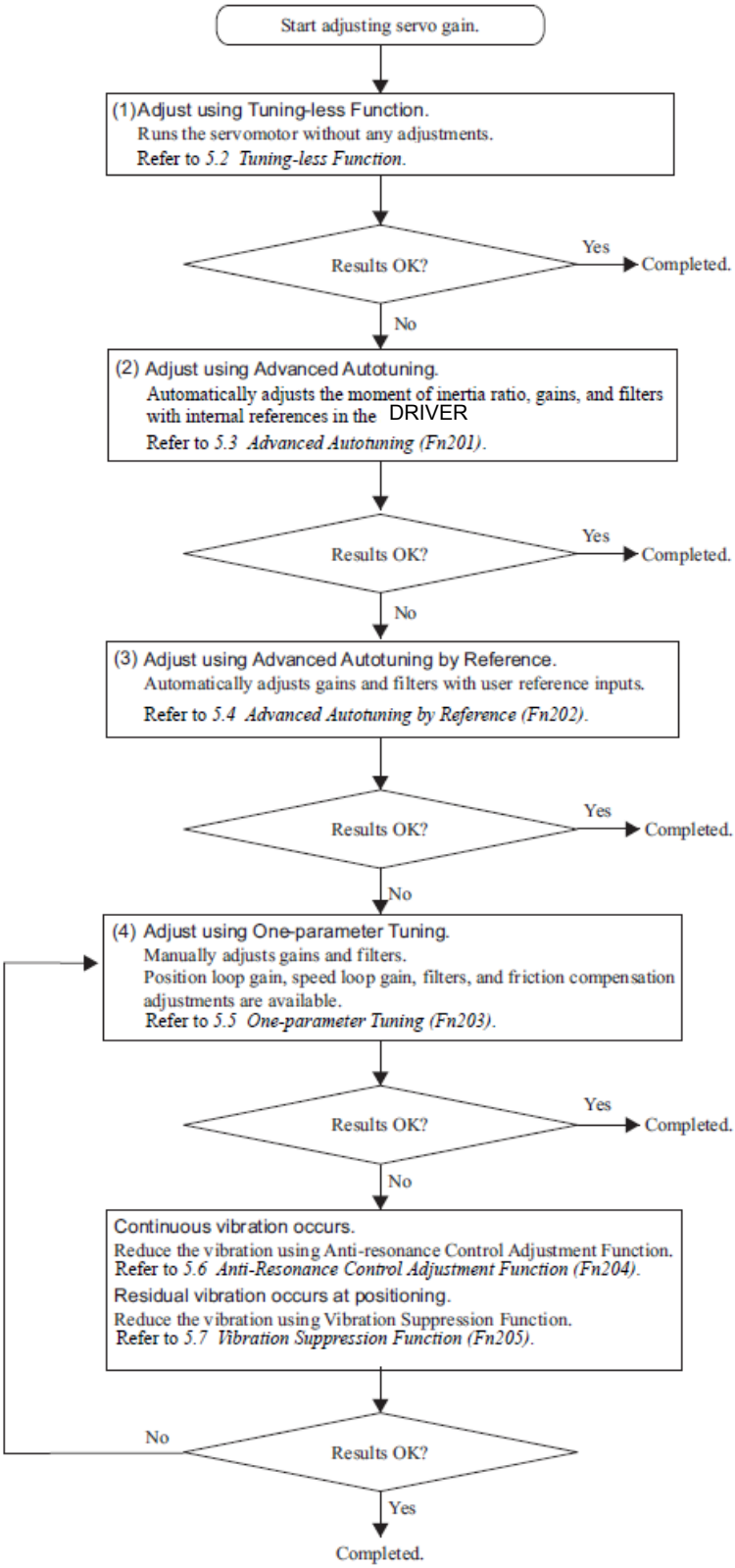

5.1.3 Monitoring Operation during Adjustment

Check the operating status of the machine and signal waveform when adjusting the servo gain. Connect a measuring instrument, such as a memory recorder, to connector CN5 analog monitor connector on the DRIVER to monitor analog signal waveform.

The settings and parameters for monitoring analog signals are described in the following sections.

(1) Connector CN5 for Analog Monitor

To monitor analog signals, connect a measuring instrument with cable (YASKAWA CONTROLS CO., LTD) to the connector CN5.

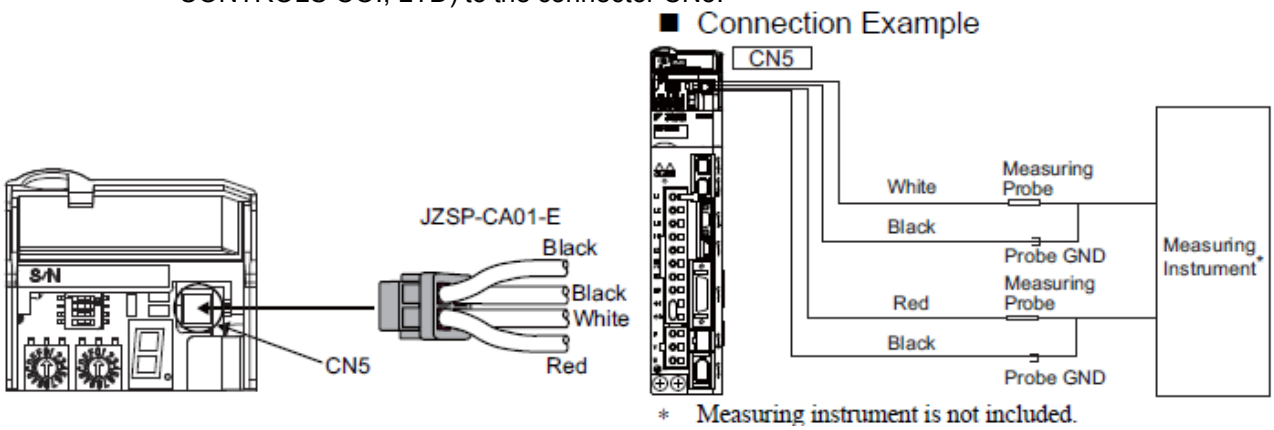

Line Color	Signal Name	Factory Setting
White	Analog monitor 1	Torque reference: 1 V/100% rated torque
Red	Analog monitor 2	Motor speed: 1 V/1000 min^{-1} *
Black (2 lines)	GND	Analog monitor GND: 0 V

(2) Monitor Signal

The shaded parts in the following diagram indicate analog output signals that can be monitored.

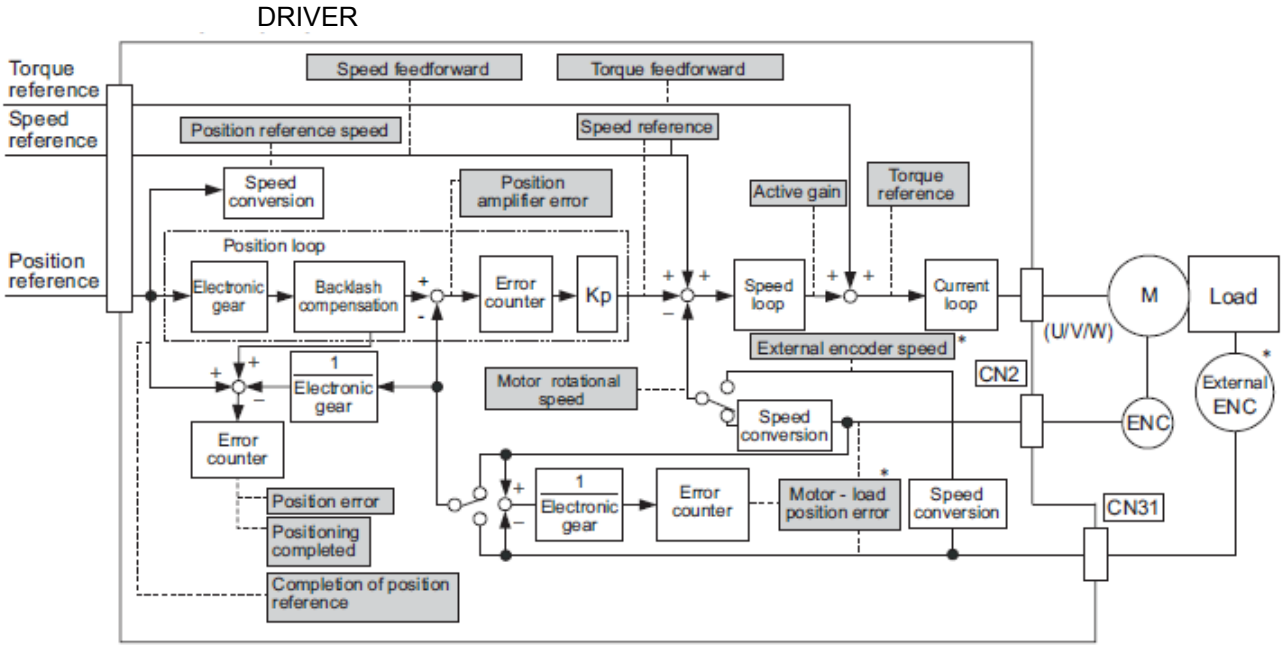

The following signals can be monitored by selecting functions with parameters Pn006 and Pn007. Pn006 is used for analog monitor 1 and Pn007 is used for analog monitor 2.

Parameter		Description		
		Monitor Signal	Unit	Remarks
Pn006 Pn007	n.□□00 [Pn007 Factory Setting]	Motor rotating speed	1 V/1000 min^{-1}	–
	n.□□01	Speed reference	1 V/1000 min^{-1}	–
	n.□□02 [Pn006 Factory Setting]	Torque reference	1 V/100% rated torque	–
	n.□□03	Position error	0.05 V/1 reference unit	0 V at speed/torque control
	n.□□04	Position amplifier error	0.05 V/1 encoder pulse unit	Position error after electronic gear conversion
	n.□□05	Position reference speed	1 V/1000 min^{-1}	–
	n.□□06	Reserved (Do not change.)	–	–
	n.□□07	Motor-load position error	0.01 V/1 reference unit	–
	n.□□08	Positioning completed	Positioning completed: 5 V Positioning not completed: 0 V	Completion indicated by output voltage.
	n.□□09	Speed feedforward	1 V/1000 min^{-1}	–
	n.□□0A	Torque feedforward	1 V/100% rated torque	–
	n.□□0B	Active gain *1	1st gain: 1 V 2nd gain: 2 V	Gain type indicated by output voltage.
	n.□□0C	Completion of position reference	Completed: 5 V Not completed: 0 V	Completion indicated by output voltage.
	n.□□0D	External encoder speed	1 V/1000 min^{-1}	Value at motor shaft

∗1. Refer to *5.8.1 Switching Gain Settings* for details.

(3) Setting Monitor Factor

The output voltages on analog monitors 1 and 2 are calculated by the following equations.

$$\text{Analog monitor 1 output voltage} = (-1) \times \left(\underset{(\text{Pn006=n.00}\square\square)}{\text{Signal selection}} \times \underset{(\text{Pn552})}{\text{Multiplier}} + \underset{(\text{Pn550})}{\text{Offset voltage [V]}} \right)$$

$$\text{Analog monitor 2 output voltage} = (-1) \times \left(\underset{(\text{Pn007=n.00}\square\square)}{\text{Signal selection}} \times \underset{(\text{Pn553})}{\text{Multiplier}} + \underset{(\text{Pn551})}{\text{Offset voltage [V]}} \right)$$

<Example>
Analog monitor output at n.□□00 (motor rotating speed setting)

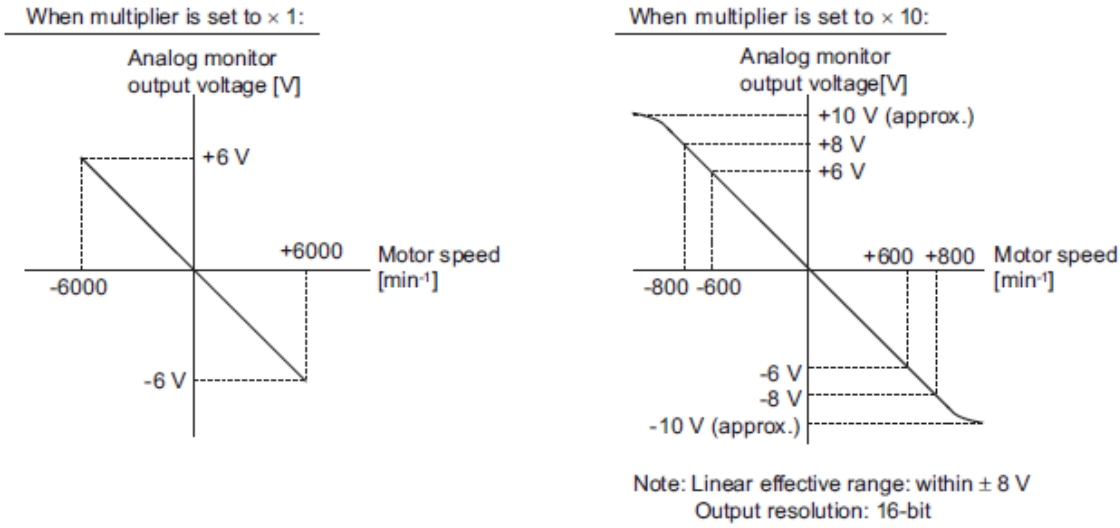

(4) Related Parameters

Use the following parameters to change the monitor factor and the offset.

Pn550	Analog Monitor 1 Offset Voltage		Speed Position Torque		Classification
	Setting Range	Setting Unit	Factory Setting	When Enabled	
	-10000 to 10000	0.1 V	0	Immediately	Setup
Pn551	Analog Monitor 2 Offset Voltage		Speed Position Torque		Classification
	Setting Range	Setting Unit	Factory Setting	When Enabled	
	-10000 to 10000	0.1 V	0	Immediately	Setup
Pn552	Analog Monitor Magnification (× 1)		Speed Position Torque		Classification
	Setting Range	Setting Unit	Factory Setting	When Enabled	
	-10000 to 10000	× 0.01	100	Immediately	Setup
Pn553	Analog Monitor Magnification (× 2)		Speed Position Torque		Classification
	Setting Range	Setting Unit	Factory Setting	When Enabled	
	-10000 to 10000	× 0.01	100	Immediately	Setup

5.1.4 Safety Precautions on Adjustment of Servo Gains

⚠ CAUTION
If adjusting the servo gains, observe the following precautions. Do not touch the rotating section of the servomotor while power is being supplied to the motor. Before starting the servomotor, make sure that the DRIVER can come to an emergency stop at any time. Make sure that a trial operation has been performed without any trouble. Install a safety brake on the machine.

Set the following protective functions of the DRIVER to the correct settings before starting to adjust the servo gains.

(1) Overtravel Function

Set the overtravel function. For details on how to set the overtravel function, refer to *4.3.2 Overtravel*.

(2) Torque Limit

The torque limit calculates the torque required to operate the machine and sets the torque limits so that the out- put torque will not be greater than required. Setting torque limits can reduce the amount of shock applied to the machine when troubles occur, such as collisions or interference. If a torque limit is set lower than the value that is needed for operation, overshooting or vibration can be occurred.
For details, refer to *4.6 Limiting Torque*.

(3) Excessive Position Error Alarm Level

The excessive position error alarm is a protective function that will be enabled when the DRIVER is used in position control.

If this alarm level is set to a suitable value, the DRIVER will detect an excessive position error and will stop the servomotor if the servomotor does not operate according to the reference. The position error indicates the difference between the position reference value and the actual motor position.
The position error can be calculated from the position loop gain (Pn102) and the motor speed with the follow- ing equation.

$$\text{Position Error [reference unit]} = \frac{\text{Motor Speed [min}^{-1}\text{]}}{60} \times \frac{\text{Encoder Resolution}^{*1}}{\text{Pn102 [0.1/s]}/10^{*2}} \times \frac{\text{Pn210}}{\text{Pn20E}}$$

Excessive Position Error Alarm Level (Pn520 [1 reference unit])

$$\text{Pn520} > \frac{\text{Max. Motor Speed [min}^{-1}\text{]}}{60} \times \frac{\text{Encoder Resolution}^{*1}}{\text{Pn102 [0.1/s]}/10^{*2}} \times \frac{\text{Pn210}}{\text{Pn20E}} \times \underline{\underline{(1.2 \text{ to } 2)}}$$

∗1. Refer to *4.4.3 Electronic Gear*.

∗2. To check the Pn102 setting, change the parameter display setting to display all parameters (Pn00B.0 = 1).

At the end of the equation, a coefficient is shown as "× (1.2 to 2)." This coefficient is used to add a margin that prevents a position error overflow alarm (A.d00) from occurring in actual operation of the servomotor.

Set the level to a value that satisfies these equations, and no position error overflow alarm (A.d00) will be generated during normal operation. The servomotor will be stopped, however, if it does not operate according to the reference and the DRIVER detects an excessive position error.

The following example outlines how the maximum limit for position deviation is calculated. These conditions apply.

- Maximum speed = 6000
- Encoder resolution = 1048576 (20 bits)
- Pn102 = 400
- Pn210/Pn20E = 1/1

Under these conditions, the following equation is used to calculate the maximum limit (Pn520).

$$\begin{aligned} \text{Pn520} &= \frac{6000}{60} \times \frac{1048576}{400/10} \times \frac{1}{1} \times 2 \\ &= 2621440 \times 2 \\ &= 5242880 \text{ (The factory setting of Pn520)} \end{aligned}$$

If the acceleration/deceleration of the position reference exceeds the capacity of the servomotor, the servomo- tor cannot perform at the requested speed, and the allowable level for position error will be increased as not to satisfy these equations. If so, lower the level of the acceleration/deceleration for the position reference so that the servomotor can perform at the requested speed or increase the excessive position error alarm level (Pn520).

- Related Parameter

Pn520	Excessive Position Error Alarm Level		Position		Classification
	Setting Range	Setting Unit	Factory Setting	When Enabled	
	1 to 1073741823	1 reference unit	5242880	Immediately	Setup

- Related Alarm

Alarm Display	Alarm Name	Meaning
A.d00	Position Error Overflow	Position errors exceeded parameter Pn520.

(4) Vibration Detection Function

Set the vibration detection function to an appropriate value with the vibration detection level initialization (Fn01B). For details on how to set the vibration detection function, refer to *6.15 Vibration Detection Level Initialization (Fn01B)*.

(5) Excessive Position Error Alarm Level at Servo ON

If position errors remain in the error counter when turning ON the servomotor power, the servomotor will move and this movement will clear the counter of all position errors. Because the servomotor will move suddenly and unexpectedly, safety precautions are required. To prevent the servomotor from moving suddenly, select the appropriate level for the excessive position error alarm level at servo ON (Pn526) to restrict opera- tion of the servomotor.

- Related Parameters

Pn526	Excessive Position Error Alarm Level at Servo ON Position				Classification
	Setting Range	Setting Unit	Factory Setting	When Enabled	
	1 to 1073741823	1 reference unit	5242880	Immediately	Setup

Pn528	Excessive Position Error Warning Level at Servo ON Position				Classification
	Setting Range	Setting Unit	Factory Setting	When Enabled	
	10 to 100	1%	100	Immediately	Setup

Pn529	Speed Limit Level at Servo ON Position				Classification
	Setting Range	Setting Unit	Factory Setting	When Enabled	
	0 to 10000	1 min^{-1}	10000	Immediately	Setup

- Related Alarms

Alarm Display	Alarm Name	Meaning
A.d01	Position Error Overflow Alarm at Servo ON	This alarm occurs if the servomotor power is turned ON when the position error is greater than the set value of Pn526 while the servomotor power is OFF.
A.d02	Position Error Overflow Alarm by Speed Limit at Servo ON	When the position errors remain in the error counter, Pn529 limits the speed if the servomotor power is turned ON. If Pn529 limits the speed in such a state, this alarm occurs when position references are input and the number of position errors exceeds the value set for the excessive position error alarm level (Pn520).

When an alarm occurs, refer to *9 Troubleshooting* and take the corrective actions.

5.2 Tuning-less Function

The tuning-less function is enabled in the factory settings. If resonance is generated or excessive vibration occurs, refer to *5.2.2 Tuning-less Levels Setting (Fn200) Procedure* and change the set value of Pn170.2 for the rigidity level and the set value in Pn170.3 for the load level.

⚠ CAUTION

- The tuning-less function is enabled in the factory settings. A sound may be heard for a moment when the SV_ON command is received for the first time after the servo drive is mounted to the machine. This sound does not indicate any problems; it means that the automatic notch filter was set. The sound will not be heard from the next time the SV_ON command is received. For details on the automatic notch filter, refer to *(3) Automatically Setting the Notch Filter* on the next page.
- The servomotor may vibrate if the load moment of inertia exceeds the allowable load value. If vibration occurs, set the mode to 2 in Fn200 or lower the adjustment level.

5.2.1 Tuning-less Function

The tuning-less function obtains a stable response without manual adjustment regardless of the type of machine or changes in the load.

(1) Enabling/Disabling Tuning-less Function

The following parameter is used to enable or disable the tuning-less function.

Parameter		Meaning	When Enabled	Classification
Pn170	n.□□□0	Disables tuning-less function.	After restart	Setup
	n.□□□1 [Factory setting]	Enables tuning-less function.		
	n.□□0□ [Factory setting]	Used as speed control.		
	n.□□1□	Used as speed control and PC or PLC...etc. used as position control.		

(2) Application Restrictions

The tuning-less function can be used in position control or speed control. This function is not available in torque control. The following application restrictions apply to the tuning-less function.

Function	Availability	Remarks
Vibration detection level initialization (Fn01B)	Available	–
Advanced autotuning (Fn201)	Available (Some conditions apply)	• This function can be used when the moment of inertia is calculated. • While this function is being used, the tuning-less function cannot be used. After completion of the autotuning, it can be used again.
Advanced autotuning by reference (Fn202)	Not available	–
One-parameter tuning (Fn203)	Not available	–
Anti-resonance control adjustment function (Fn204)	Not available	–
Vibration suppression function (Fn205)	Not available	–
EasyFFT (Fn206)	Available	While this function is being used, the tuning-less function cannot be used. After completion of the EasyFFT, it can be used again.
Friction compensation	Not available	–
Gain switching	Not available	–
Offline moment of inertia calculation *	Not available	Disable the tuning-less function by setting Pn170.0 to 0 before executing this function.
Mechanical analysis*	Available	While this function is being used, the tuning-less function cannot be used. After completion of the analysis, it can be used again.

∗ Operate using SigmaWin+.

(3) Automatically Setting the Notch Filter

Usually, set this function to Auto Setting. (The notch filter is factory-set to Auto Setting.)
If this function is set to Auto Setting, vibration will be detected automatically and the notch filter will be set when the tuning-less function is enabled.

Set this function to Not Auto Setting only if you do not change the notch filter setting before executing tuning- less function.

Parameter		Meaning	When Enabled	Classification
Pn460	n.□0□□	Does not set the 2nd notch filter automatically with utility function.	Immediately	Tuning
	n.□1□□ [Factory setting]	Set the 2nd notch filter automatically with utility function.		

(4) Tuning-less Level Settings

Two tuning-less levels are available: the rigidity level and load level. Both levels can be set in the Fn200 util- ity function or in the Pn170 parameter.

- Rigidity Level

Parameter		Meaning	When Enabled	Classification
Pn170	n.□0□□	Rigidity level 0 (Level 0)	Immediately	Setup
	n.□1□□	Rigidity level 1 (Level 1)		
	n.□2□□	Rigidity level 2 (Level 2)		
	n.□3□□	Rigidity level 3 (Level 3)		
	n.□4□□ [Factory setting]	Rigidity level 4 (Level 4)		

- Load Level

Parameter		Meaning	When Enabled	Classification
Pn170	n.0□□□	Load level : Low (Mode 0)	Immediately	Setup
	n.1□□□ [Factory setting]	Load level : Medium (Mode 1)		
	n.2□□□	Low level : High (Mode 2)		

5.2.2 Tuning-less Levels Setting (Fn200) Procedure

⚠ CAUTION

- To ensure safety, perform the tuning-less function in a state where the DRIVER can come to an emergency stop at any time.

The procedure to use the tuning-less function is given below.

Operate the tuning-less function from the SigmaWin+.

(1) Preparation

Check the following settings before performing the tuning-less function. If the settings are not correct, "NO- OP" will be displayed during the tuning-less function.

- The tuning-less function must be enabled (Pn170.0 = 1).
- The write prohibited setting parameter (Fn010) must be set to Write permitted (P.0000).
- The test without a motor function must be disabled. (Pn00C.0 = 0).

(2) Operating Procedure with Sigma Win+

1. In the SigmaWin+ Σ-V component main window, click **Setup** and then **Response Level Setting**.

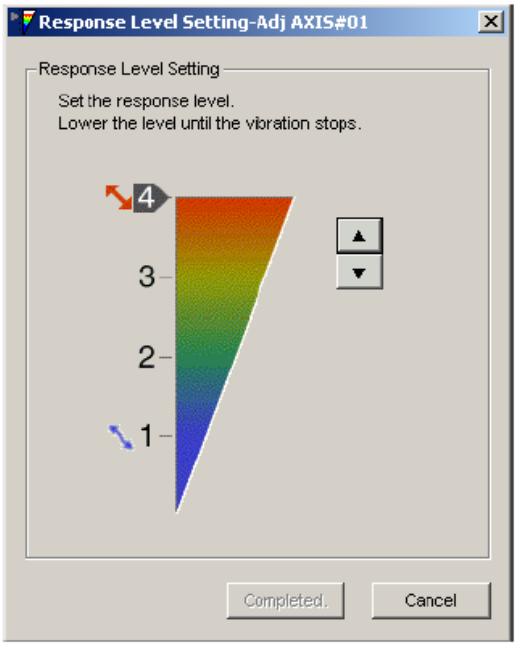

2. Click the setting arrows to adjust the response level so that the machine does not vibrate.
   The factory setting is 4, the maximum level.
3. Click **Completed** to save the setting in the DRIVER.

(3) Alarm and Corrective Actions

The autotuning alarm (A.521) will occur if resonance sound is generated or excessive vibration occurs during position control. In such case, take the following actions.

- Resonance Sound

  In the SigmaWin+, reduce the setting of the Response level.

- Excessive Vibration during Position Control

  Take one of the following actions to correct the problem.

  In the SigmaWin+, reduce the setting of the Response level.
  Increase the setting of Pn170.3 (Load level) or reduce the setting of Pn170.2.

(4) Parameters Disabled by Tuning-less Function

When the tuning-less function is enabled in the factory settings, the settings of these parameters are not avail- able: Pn100, Pn101, Pn102, Pn103, Pn104, Pn105, Pn106, Pn160, Pn139, and Pn408. These gain-related parameters, however, may become effective depending on the executing conditions of the functions specified in the following table. For example, if EasyFFT is executed when the tuning-less function is enabled, the set- tings in Pn100, Pn104, Pn101, Pn105, Pn102, Pn106, and Pn103, as well as the manual gain switch setting, will be enabled, but the settings in Pn408.3, Pn160.0, and Pn139.0 will be not enabled.

Parameters Disabled by Tuning-less Function			Related Functions and Parameters*		
Item	Name	Pn Number	Torque Con- trol	Easy FFT	Mechanical Analysis (Ver- tical Axis Mode)
Gain	Speed Loop Gain 2nd Speed Loop Gain	Pn100 Pn104	○	○	○
	Speed Loop Integral Time Constant 2nd Speed Loop Integral Time Constant	Pn101 Pn105	×	○	○
	Position Loop Gain 2nd Position Loop Gain	Pn102 Pn106	×	○	○
	Moment of Inertia Ratio	Pn103	○	○	○
Advanced Control	Friction Compensation Function Selec- tion	Pn408.3	×	×	×
	Anti-resonance Control Adjustment Selection	Pn160.0	×	×	×
Gain Switch-ing	Gain Switching Selection Switch	Pn139.0	×	×	×

∗ ○: Parameter enabled
×: Parameter disabled

(5) Tuning-less Function Type

The following table shows the types of tuning-less functions for the version of DRIVER software.

Software Version*	Tuning-less Type	Meaning
000A or earlier	Tuning-less type 1	–
000B or later	Tuning-less type 2	The level of noise produced is lower than that of Type 1.

∗Refer to "6.13 Product Information Display" for the confirm method of the software version. The software version number of your DRIVER can be checked with Fn012.

Parameter		Meaning	When Enabled	Classification
Pn14F	n.□□0□	Tuning-less type 1	After restart	Tuning
	n.□□1□ [Factory setting]	Tuning-less type 2		

5.2.3 Related Parameters

The following table lists parameters related to this function and their possibility of being changed while exe- cuting this function or of being changed automatically after executing this function.

- Parameters related to this function
  These are parameters that are used or referenced when executing this function.

- Allowed changes during execution of this function
  Yes : Parameters can be changed using SigmaWin+ while this function is being executed.
  No : Parameters cannot be changed using SigmaWin+ while this function is being executed.

- Automatic changes after execution of this function
  Yes : Parameter set values are automatically set or adjusted after execution of this function.
  No : Parameter set values are not automatically set or adjusted after execution of this function.

Parameter	Name	Mid-execution changes	Automatic changes
Pn170	Tuning-less Function Related Switch	No	Yes
Pn401	Torque Reference Filter Time Constant	No	Yes
Pn40C	2nd Notch Filter Frequency	No	Yes
Pn40D	2nd Notch Filter Q Value	No	Yes

5.3 Advanced Autotuning (Fn201)

This section describes the adjustment using advanced autotuning.

IMPORTANT

- Advanced autotuning starts adjustments based on the set speed loop gain (Pn100). Therefore, precise adjustments cannot be made if there is vibration when starting adjustments. In this case, make adjustments after lowering the speed loop gain (Pn100) until vibration is eliminated.
- Before performing advanced autotuning with the tuning-less function enabled (Pn170.0 = 1: Factory setting), always set calculate the load moment of inertia. The tuning-less function will automatically be disabled, and the gain will be set by advanced autotuning.

With the load moment of inertia is not calculated, "Error" will be displayed on the panel operator, and advanced autotuning will not be performed.

- If the operating conditions, such as the machine-load or drive system, are changed after advanced autotuning, then change the following related parameters to disable any values that were adjusted before performing advanced autotuning once again with the setting to calculate the moment of inertia. If advanced autotun- ing is performed without changing the parameters, machine vibration may occur, resulting in damage to the machine.

  Pn00B.0=1 (Displays all parameters.)

  Pn140.0=0 (Does not use model following control.)

  Pn160.0=0 (Does not use anti-resonance control.)

  Pn408=n.00□0 (Does not use friction compensation, 1st notch filter, or 2nd notch filter.)

5.3.1 Advanced Autotuning

Advanced autotuning automatically operates the servo system (in reciprocating movement in the forward and reverse directions) within set limits and adjust the DRIVER automatically according to the mechanical characteristics while the servo system is operating.

Advanced autotuning can be performed without connecting the PC or PLC...etc. The following automatic operation specifications apply.

- Maximum speed: Rated motor speed × 2/3
- Acceleration torque: Approximately 100% of rated motor torque
  The acceleration torque varies with the influence of the moment of inertia ratio
  (Pn103), machine friction, and external disturbance.
- Travel distance: The travel distance can be set freely. The distance is factory-set to a value equivalent to 3 motor rotations.

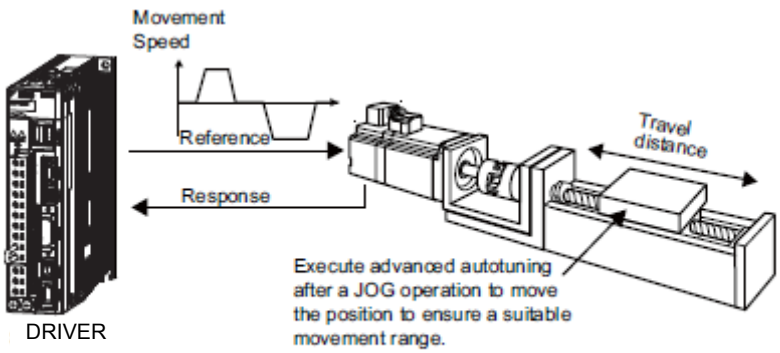

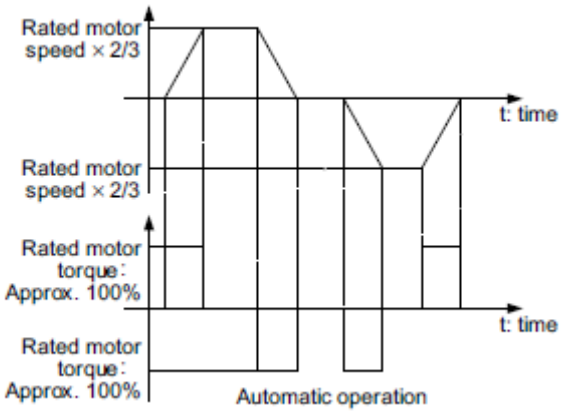

Advanced autotuning performs the following adjustments.

- Moment of inertia ratio
- Gains (e.g., position loop gain and speed loop gain)
- Filters (torque reference filter and notch filter)
- Friction compensation
- Anti-resonance control
- Vibration suppression (Mode = 2 or 3)

Refer to *5.3.3 Related Parameters* for parameters used for adjustments.

⚠ CAUTION

- Because advanced autotuning adjusts the DRIVER during automatic operation, vibration or over- shooting may occur. To ensure safety, perform advanced autotuning in a state where the DRIVER can come to an emergency stop at any time.

(1) Preparation

Check the following settings before performing advanced autotuning.
The message “NO-OP” indicating that the settings are not appropriate will be displayed, if all of the following conditions are not met.

- The main circuit power supply must be ON.
- There must be no overtravel.
- The servomotor power must be OFF.
- The control method must not be set to torque control.
- The gain selection switch must be in manual switching mode (Pn139.0 = 0).
- Gain setting 1 must be selected.
- The test without a motor function must be disabled (Pn00C.0 = 0).
- All alarms and warning must be cleared.
- The hardwire baseblock (HWBB) must be disabled.
- The write prohibited setting parameter (Fn010) must be set to Write permitted (P.0000).
- Jcalc must be set to ON to calculate the load moment of inertia when the tuning-less function is enabled (Pn170.0 = 1: factory setting) or the tuning-less function must be disabled (Pn170.0 = 0).

Note: If advanced autotuning is started while the DRIVER is in speed control, the mode will change to position control automatically to perform advanced autotuning. The mode will return to speed control after completing the adjustment. To perform advanced autotuning in speed control, set the mode to 1 (Mode = 1).

(2) When Advanced Autotuning Cannot Be Performed

Advanced autotuning cannot be performed normally under the following conditions. Refer to *5.4 Advanced Autotuning by Reference (Fn202)* and *5.5 One-parameter Tuning (Fn203)* for details.

- The machine system can work only in a single direction.

(3) When Advanced Autotuning Cannot Be Performed Successfully

Advanced autotuning cannot be performed successfully under the following conditions. Refer to *5.4 Advanced Autotuning by Reference (Fn202)* and *5.5 One-parameter Tuning (Fn203)* for details.

- The operating range is not applicable.
- The moment of inertia changes within the set operating range.
- The machine has high friction.
- The rigidity of the machine is low and vibration occurs when positioning is performed.
- The position integration function is used.
- P control operation (proportional control) is used.
  Note: If a setting is made for calculating the moment of inertia, an error will result when P control operation is selected using /V_PPI of the servo command output signals (SVCMD_IO) while the moment of inertia is being calculated.
- The mode switch is used.
  Note: If a setting is made for calculating the moment of inertia, the mode switch function will be disabled while the moment of inertia is being calculated. At that time, PI control will be used. The mode switch function will be enabled after calculating the moment of inertia.
- Speed feedforward or torque feedforward is input.
- The positioning completed width (Pn522) is too small.

IMPORTANT

- Advanced autotuning makes adjustments by referring to the positioning completed width (Pn522). If the DRIVER is operated in position control (Pn000.1=1), set the electronic gear ratio (Pn20E/Pn210) and positioning completed width (Pn522) to the actual value during operation. If the DRIVER is operated in speed control (Pn000.1=0), set Mode to 1 to perform advanced autotuning.
- Unless the positioning completed signal (/COIN) is turned ON within approximately 3 seconds after positioning has been completed, "WAITING" will flash. Furthermore, unless the positioning completed signal (/COIN) is turned ON within approximately 10 seconds, "Error" will flash for 2 seconds and tuning will be aborted.

Change only the overshoot detection level (Pn561) to finely adjust the amount of overshooting without chang- ing the positioning completed width (Pn522). Because Pn561 is set by default to 100%, the allowable amount of overshooting is the same amount as that for the positioning completed width.
When Pn561 is set to 0%, the amount of overshooting can be adjusted to prevent overshooting the positioning completed width. If the setting of Pn561 is changed, however, the positioning time may be extended.

Pn561	Overshoot Detection Level		Speed Position Torque		Classification
	Setting Range	Setting Unit	Factory Setting	When Enabled	
	0 to 100	1%	100	Immediately	Setup

5.3.2 Advanced Autotuning Procedure

The following procedure is used for advanced autotuning.
Advanced autotuning is performed from the SigmaWin+.
The operating procedure from the SigmaWin+ is described here.

⚠ CAUTION

- When using the DRIVER with Jcalc = OFF (load moment of inertia is not calculated), be sure to set a suitable value for the moment of inertia ratio (Pn103). If the setting greatly differs from the actual moment of inertia ratio, normal control of the DRIVER may not be possible, and vibration may result.
- When using the MP2000 Series with phase control, select the mode = 1 (standard level). If 2 or 3 is selected, phase control of the MP2000 Series may not be possible.

(1) Operating Procedure

In the SigmaWin+ Σ-V component main window, click **Tuning** and then click **Tuning**.

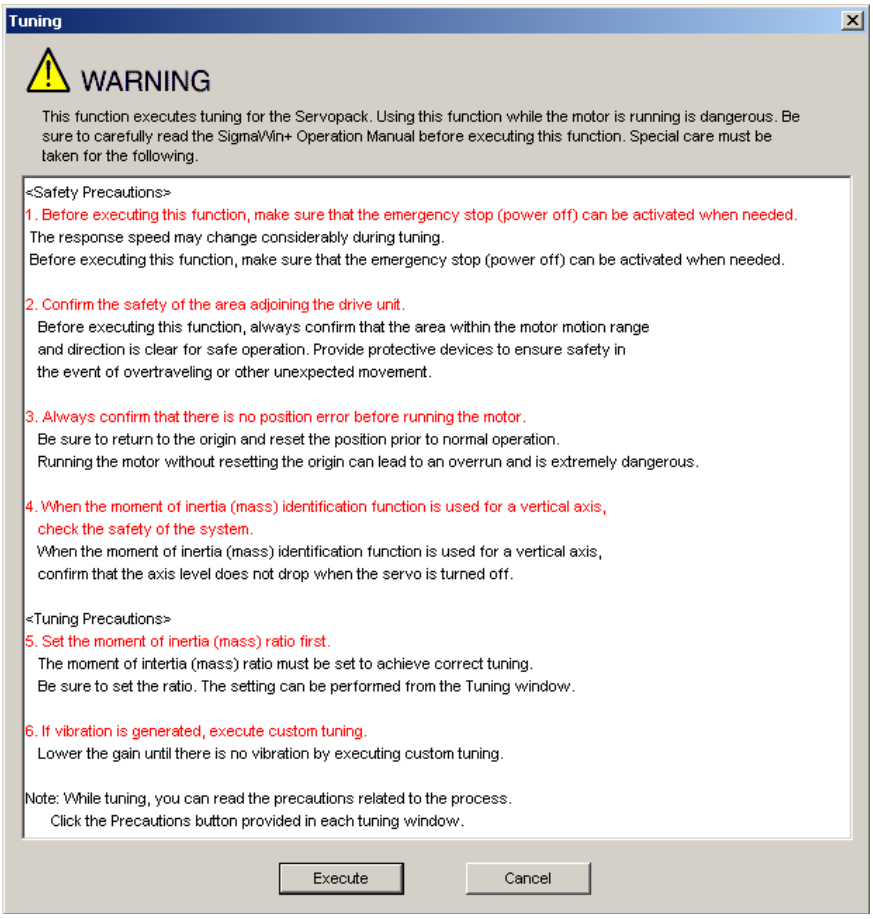

Click **Execute**. The Tuning main window appears.

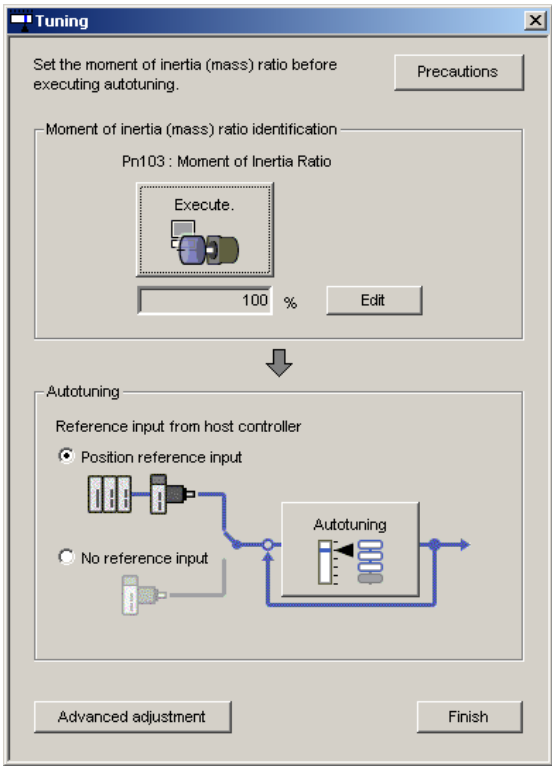

- Moment of Inertia (Mass) Identification

Click **Execute** in the Tuning main window. The Condition Setting box will appear.

1. Setting the Conditions

Set the conditions for identifying moment of inertia (mass) in the Condition Setting box.

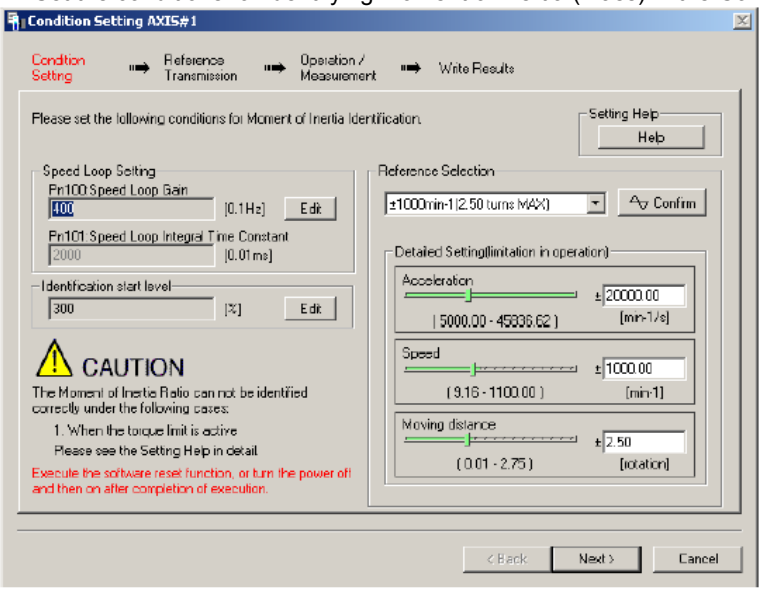

Speed Loop Setting: Set the speed loop gain and integral time constant.

[Edit]

Click **Edit** to view the Speed Loop-Related Setting Change box.

Identification Start Level: Set the moment of inertia (mass) identification start level.

[Help]

Click **Help** to open the window for guidelines on the reference condition settings.

Reference Selection: Select the reference pattern for identifying the moment of inertia (mass). (Recommended method.)

Detailed Setting: Create the reference pattern for setting the moment of inertia (mass) by changing the values with the slider or by directly entering the values.

[Next>]

Click **Next** to view the Reference Transmission box.

[Cancel]

Click **Cancel** to return to the main window without changing the conditions.

[Confirm]

Click **Confirm** to view the reference wave.

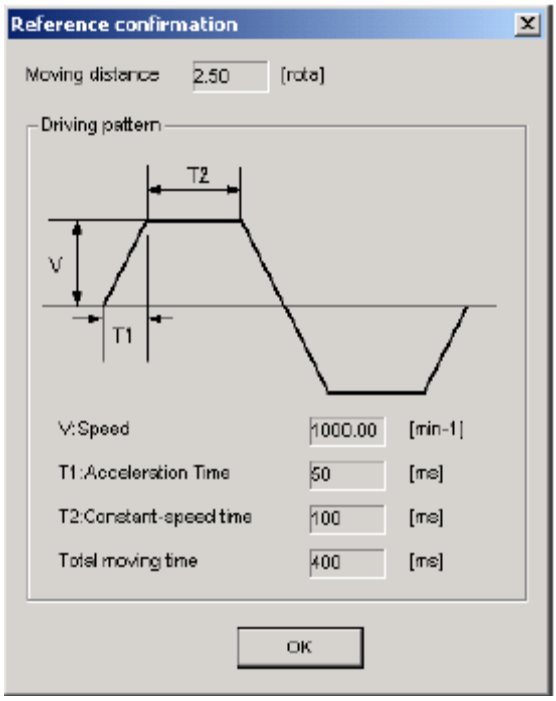

2. Reference Transmission

Transfer the reference conditions to the DRIVER. Click **Start** in the Reference Transmission box to begin the transfer.

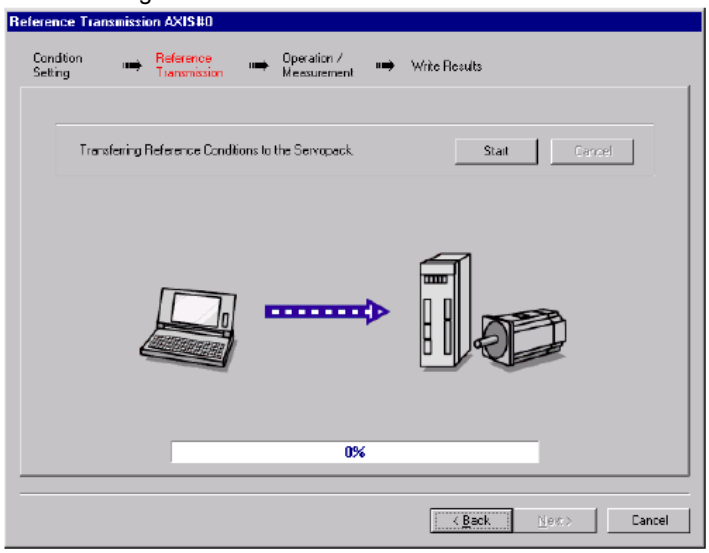

[Start]

Click to **Start** to transfer the reference conditions to the DRIVER. A progress bar displays the progress status of the transfer.

[Cancel]

The **Cancel** button is available only during the transfer to the DRIVER. After the transmission is finished, it is unavailable and cannot be selected.

[Next>]

The **Next** button is available if the data is transferred successfully. If an error occurs or if the transmission is interrupted, it is unavailable and cannot be selected.

Click **Next** to view the Operation/Measurement box.

[<Back]

Click **Back** to return to the Condition Setting box. The **Back** button is unavailable during a data transfer.

[Cancel]

Click **Cancel** to stop processing and return to the main window.

After the data has been successfully transferred, click **Next**, and the Operation/ Measurement box appears.

3. Operation/Measurement

In the Operation/Measurement box, run and measure the actual motor. Measurements are taken two to seven times and then verified. Run the motor and take measurements using the following procedure.

1. Click **Servo ON** to turn on the servo power.

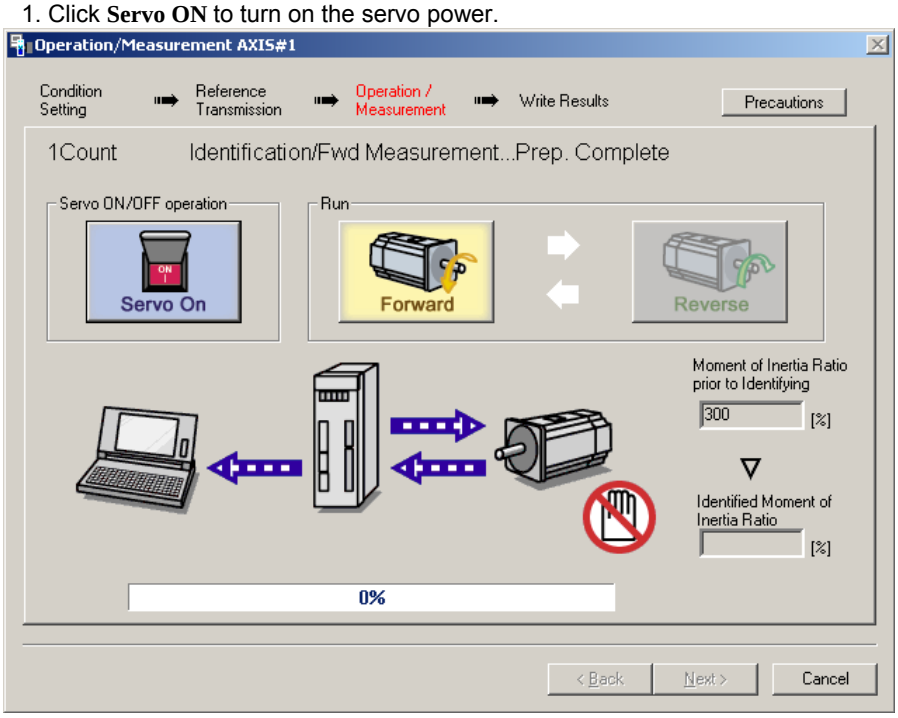

2. Click **Forward** to take measurements by turning (moving) the motor forward. After the measurements and the data transmission are finished, the following window appears.

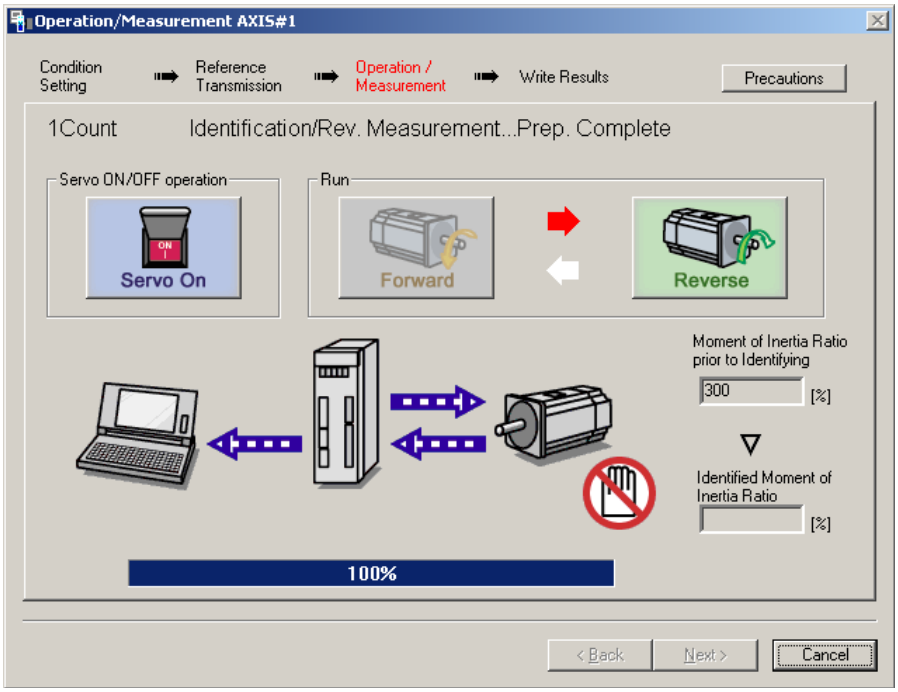

3. Click **Reverse** to take measurements by turning (moving) the motor in reverse. After the measurements and the data transmission are finished, the following window appears.

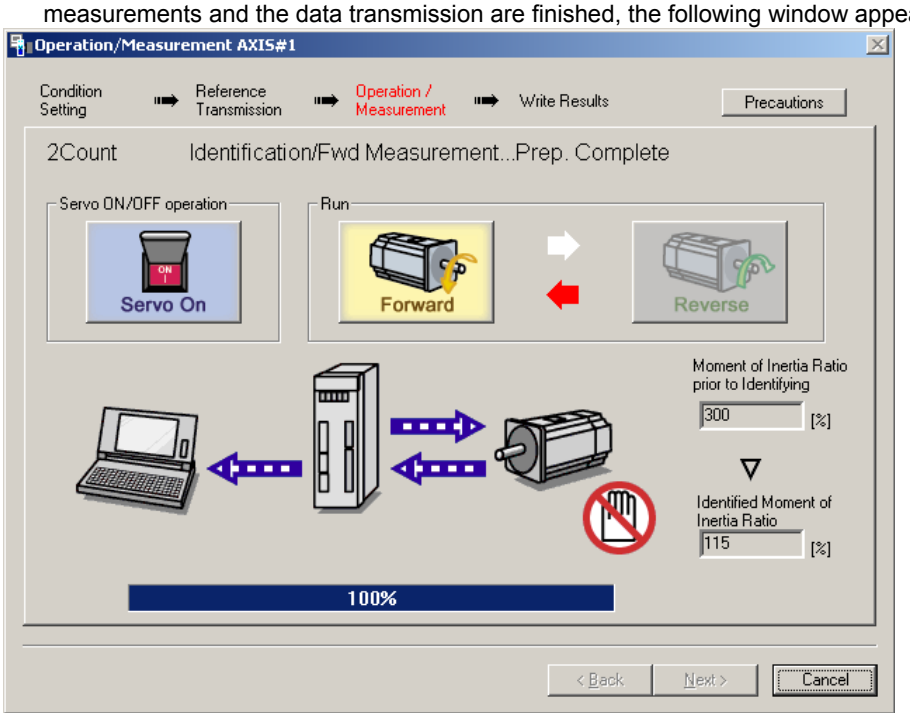

4. Repeat steps 2 through 3 until all the measurements have been taken.
   The actual number of times the measurements have been taken is displayed in the upper left part on the screen.
   The progress bar displays the percentage of data that has been transferred.1
5. After the measurement has been successfully completed, click **Servo ON** to turn to the servo OFF status.
6. Click **Next**, and the Write Results box appears.
   When **Next** is clicked without turning to the servo OFF status, the following message appears.

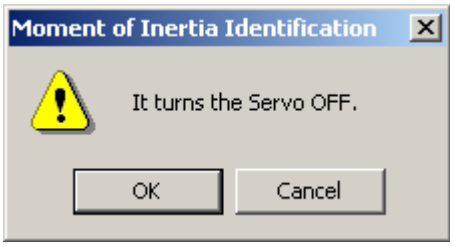

Click **OK** to turn to the servo OFF status.

4. Writing Results

In the Write Results box, set the moment of inertia (mass) ratio calculated in the operation/ measurement to the parameters.

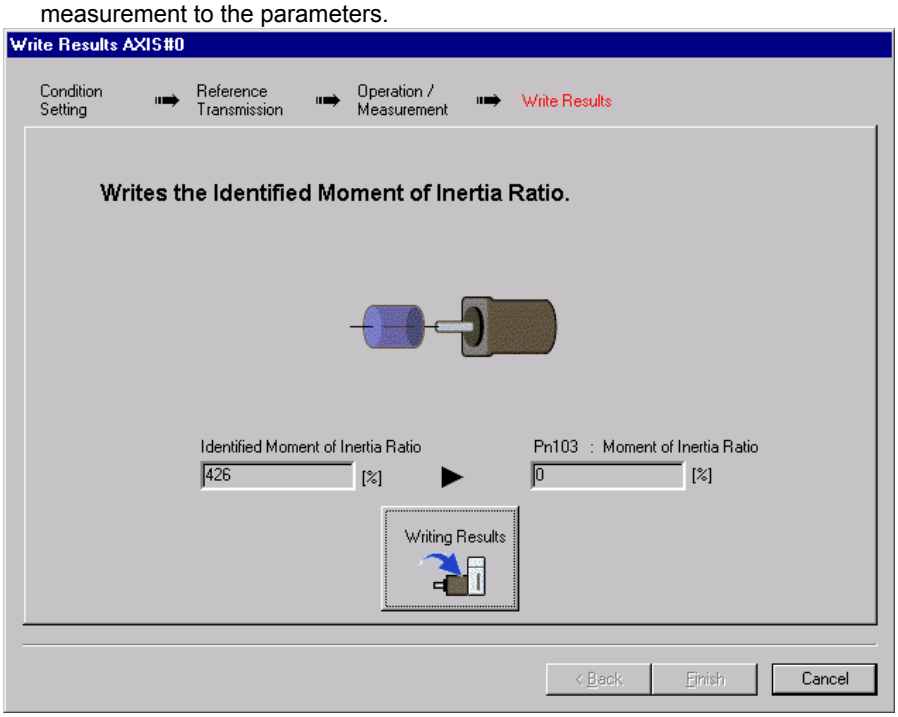

[Writing Results]

Click **Writing Results** to assign the value displayed in the identified moment of inertia (mass) ratio to DRIVER parameter Pn103.

Pn103: Moment of Inertia (Mass) Ratio

Displays the value assigned to the parameter.

Click **Write Results**, and the new ratio calculated from the operation/measurement will be displayed.

[<Back]

The **Back** button is unavailable.

[Cancel]

Click **Cancel** to return to the main window.

[Finish]

Click **Finish**, and a warning message appears reminding you to reset the origin position. (No warning message appears when the Write Results box has been opened from the Tuning main window.)

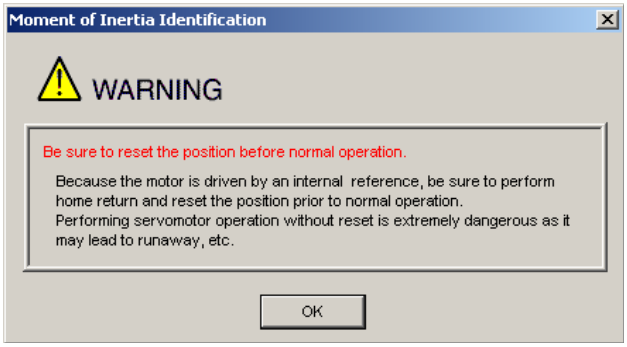

Click **OK** to return to the SigmaWin+ ©-V component Main window. If Pn103 (Moment of Inertia (Mass) Ratio) has been changed, that new value will remain.

- Autotuning without Reference Input

To execute autotuning without using a reference input, use the following procedure.

1. Select the **No reference input** option under **Reference input from host controller** in the Tuning main window, and then click **Autotuning**. The Autotuning-Setting Conditions box will appear.

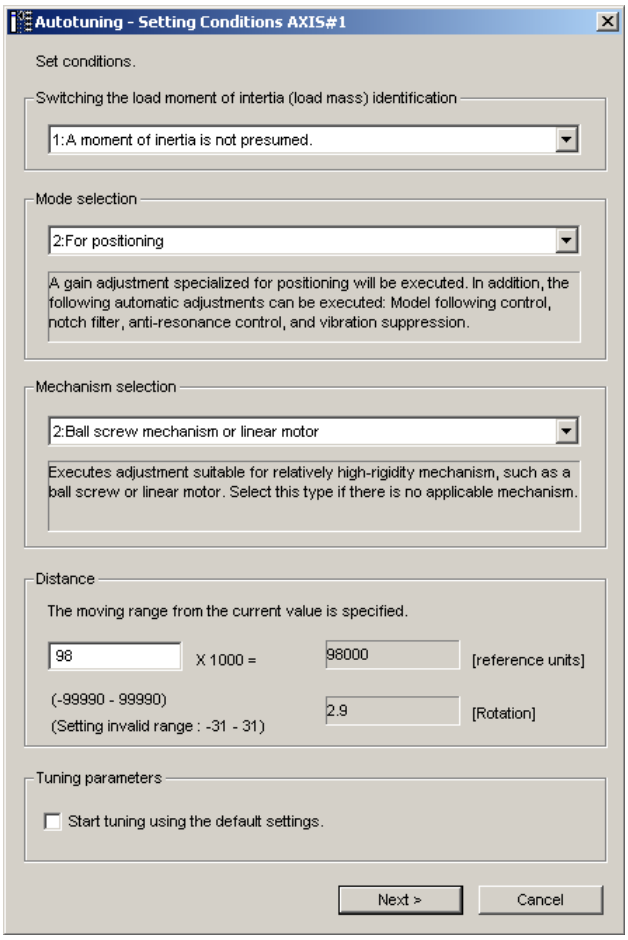

2. Select whether or not to use the load moment of inertia (load mass) identification from the **Switching the load moment of inertia (load mass) identification** box, the mode from the **Mode selection** box, the mechanism from the **Mechanism selection** box, and enter the moving distance. Then, click **Next**.

·Calculating Moment of Inertia

Select the mode to be used. Usually, set to the Moment of inertia calculated.

·Mode Selection

Select the mode.
Mode = 1: Makes adjustments considering response characteristics and stability (Standard level).
Mode = 2: Makes adjustments for positioning [Factory setting].
Mode = 3: Makes adjustments for positioning, giving priority to overshooting suppression.

·Mechanism Selection

Select the mechanism according to the machine element to be driven. If there is noise or the gain does not increase, bet- ter results may be obtained by changing the rigidity type.
Type = 1: For belt drive mechanisms (LEFB, LEJB)
Type = 2: For ball screw drive mechanisms [Factory setting] (LEY, LEFS, LEJS)

·STROKE (Travel Distance) Setting

Travel distance setting range:
The travel distance setting range is from -99990000 to +99990000 [reference unit].
Specify the STROKE (travel distance) in increments of 1000 reference units.
The negative (-) direction is for reverse rotation, and the positive (+) direction is for forward rotation.
Initial value: About 3 rotations

Notes:
- Set the number of motor rotations to at least 0.5; otherwise, "Error" will be displayed and the travel distance cannot be set.
- To calculate the moment of inertia and ensure precise tuning, it is recommended to set the number of motor rotations to around 3.

When the **Start tuning using the default settings.** check box is selected in the Autotuning-Setting Conditions box, tuning will be executed using the tuning parameters set to the default values.

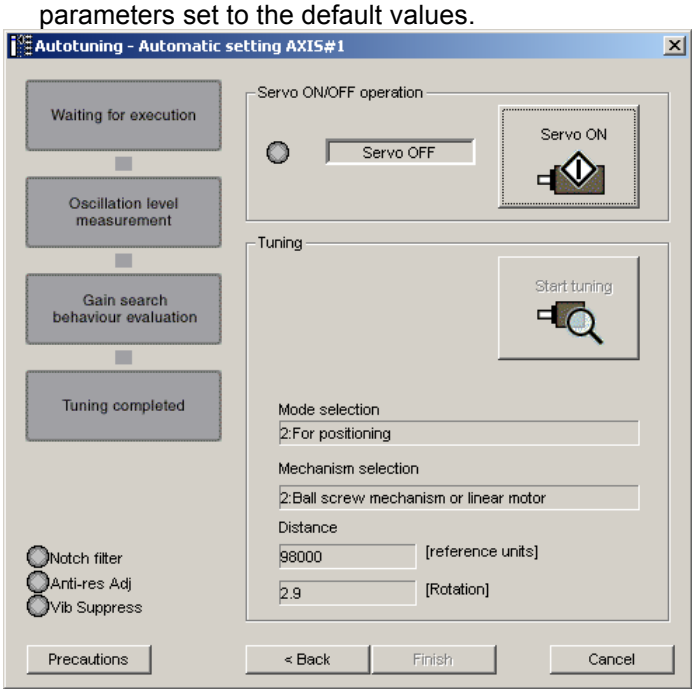

3. Click **Servo ON**. The following box will appear.

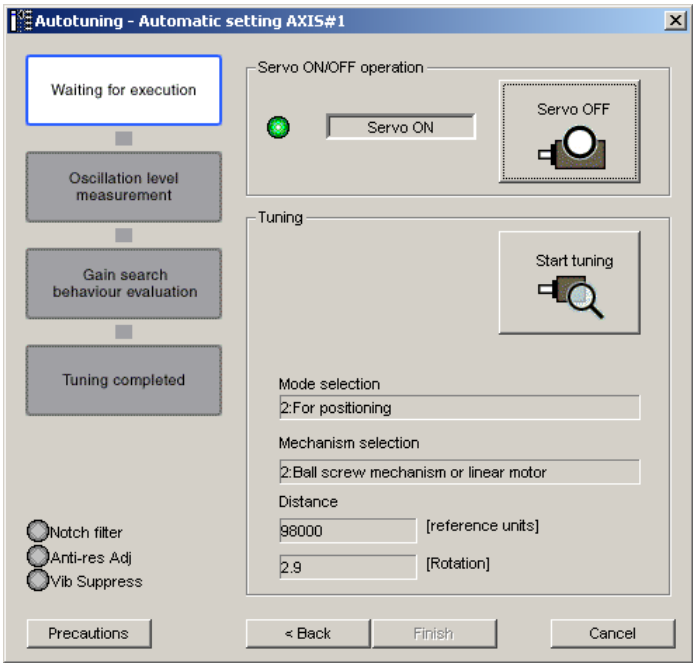

4. Click **Start tuning**. The motor will start rotating and tuning will commence.

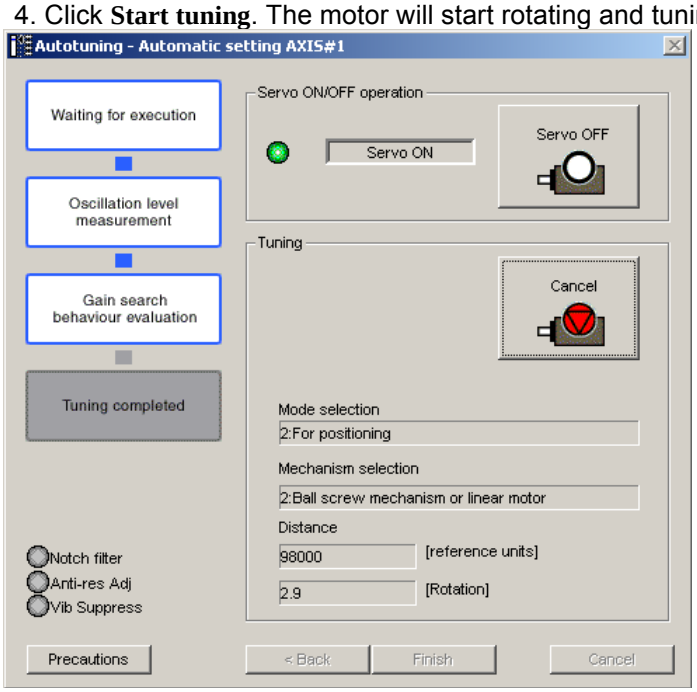

Vibration generated during tuning is automatically detected, and the optimum setting for the detected vibration will be made. When the setting is complete, the LED indicator lamps (bottom left of the box) of the functions used for the setting will light up.

5. When tuning is completed, click **Finish**. The results of tuning will be written in the parameters.

For more information on the usage of the SigmaWin+, refer to AC Servo Drives Engineering Tool Sigma Win+ ONLINE MANUAL Σ-V Component *4.6.3 Autotuning without Reference Input.*

(2) Failure in Operation

When "NO-OP" Flashes on the Display

Probable Cause	Corrective Actions
The main circuit power supply was OFF.	Turn ON the main circuit power supply.
An alarm or warning occurred.	Remove the cause of the alarm or the warning.
Overtraveling occurred.	Remove the cause of the overtravel.
Gain setting 2 was selected by gain switching.	Disable the automatic gain switching.
The HWBB function operated.	Disable the HWBB function.

When "Error" Flashes on the Display

Error	Probable Cause	Corrective Actions
The gain adjustment was not successfully completed.	Machine vibration is occurring or the positioning completed signal (/COIN) is turning ON and OFF when the servomotor is stopped.	- Increase the set value for Pn522. - Change the mode from 2 to 3. - If machine vibration occurs, suppress the vibration with the anti-resonance control adjustment function and the vibration suppression function.
An error occurred during the calculation of the moment of inertia.	Refer to the following table • *When an Error Occurs during Calculation of Moment of Inertia*.	
Travel distance setting error	The travel distance is set to approximately 0.5 rotation or less, which is less than the min- imum adjustable travel distance.	Increase the travel distance. It is recommended to set the number of motor rotations to around 3.
The positioning completed signal (/COIN) did not turn ON within approximately 10 seconds after positioning adjustment was completed.	The positioning completed width is too narrow or proportional control (P control) is being used.	- Increase the set value for Pn522. - Set 0 to V_PPI in the servo command output signals (SVCMD_IO).
The moment of inertia cannot be calculated when the tuning-less function was activated.	When the tuning-less function was activated, Jcalc was set to the Moment of inertia not calculated so the moment of inertia was not calculated.	- Turn OFF the tuning-less function. - Set to the Moment of inertia calculated, so the moment of inertia will be calculated.

When an Error Occurs during Calculation of Moment of Inertia

The following table shows the probable causes of errors that may occur during the calculation of the moment of inertia with the Moment of inertia calculated, along with corrective actions for the errors.

Error Display	Probable Cause	Corrective Actions
Err1	The DRIVER started calculating the moment of inertia, but the calculation was not completed.	- Increase the speed loop gain (Pn100). - Increase the STROKE (travel distance).
Err2	The moment of inertia fluctuated greatly and did not converge within 10 tries.	Set the calculation value based on the machine specifications in Pn103 and execute the calculation with the Jcalc set to OFF.
Err3	Low-frequency vibration was detected.	Double the set value of the moment of inertia calculating start level (Pn324).
Err4	The torque limit was reached.	- When using the torque limit, increase the torque limit. - Double the set value of the moment of inertia calculating start level (Pn324).
Err5	While calculating the moment of inertia, the speed control was set to proportional control by setting 1 to V_PPI in the servo command output signals (SVCMD_IO).	Operate the DRIVER with PI control while calculating the moment of inertia.

(3) Related Functions on Advanced Autotuning

This section describes functions related to advanced tuning.

-Notch Filter

Usually, set this function to Auto Setting. (The notch filter is factory-set to Auto Setting.) If this function is set to Auto Setting, vibration will be detected automatically during advanced autotuning and the notch filter will be set.

Set this function to Not Auto Setting only if you do not change the notch filter setting before executing advanced autotuning.

Parameter		Function	When Enabled	Classification
Pn460	n.□□□0	Does not set the 1st notch filter automatically with the utility function.	Immediately	Tuning
	n.□□□1 [Factory setting]	Sets the 1st notch filter automatically with the utility function.		
	n.□0□□	Does not set the 2nd notch filter automatically with the utility function.		
	n.□1□□ [Factory setting]	Sets the 2nd notch filter automatically with the utility function.		

-Anti-Resonance Control Adjustment

This function reduces low vibration frequency, which the notch filter does not detect.

Usually, set this function to Auto Setting. (The anti-resonance control is factory-set to Auto Setting.)
When this function is set to Auto Setting, vibration will be automatically detected during advanced autotuning and anti-resonance control will be automatically adjusted and set.

Parameter		Function	When Enabled	Classification
Pn160	n.□□0□	Does not use the anti-resonance control automatically with the utility function.	Immediately	Tuning
	n.□□1□ [Factory setting]	Uses the anti-resonance control automatically with the utility function.		

-Vibration Suppression

The vibration suppression function suppresses transitional vibration at frequency as low as 1 to 100 Hz that is generated mainly when positioning if the machine stand vibrates.

Usually, set this function to Auto Setting. (The vibration suppression function is factory-set to Auto Setting.) When this function is set to Auto Setting, vibration will be automatically detected during advanced autotuning and vibration suppression will be automatically adjusted and set.
Set this function to Not Auto Setting only if you do not change the setting for vibration suppression before executing advanced autotuning.

Note: This function uses model following control. Therefore, the function can be executed only if the mode is set to 2 or 3.

-Related Parameter

Parameter		Function	When Enabled	Classification
Pn140	n.□0□□	Does not use the vibration suppression function automatically with the utility function.	Immediately	Tuning
	n.□1□□ [Factory setting]	Uses the vibration suppression function automatically with the utility function.		

-Friction Compensation

This function compensates for changes in the following conditions.

- Changes in the viscous resistance of the lubricant, such as the grease, on the sliding parts of the machine
- Changes in the friction resistance resulting from variations in the machine assembly
- Changes in the friction resistance due to aging

The conditions for applying friction compensation depend on the mode. The friction compensation setting in Pn408.3 applies when the Mode is 1. The friction compensation function is always enabled regardless of the friction compensation setting in Pn408.3 when the Mode is 2 or 3.

Friction Compensation Selecting \ Mode		Mode = 1	Mode = 2	Mode = 3
Pn408	n.0□□□ [Factory setting]	Adjusted without the friction compensation function	Adjusted with the friction compensation function	Adjusted with the friction compensation function
	n.1□□□	Adjusted with the friction compensation function		

- Feedforward

If Pn140 is set to the factory setting and the mode setting is changed to 2 or 3, the feedforward gain (Pn109), speed feedforward (VFF) input, and torque feedforward (TFF) input will be disabled.

Set Pn140.3 to 1 if model following control is used together with the speed feedforward (VFF) input and torque feedforward (TFF) input from the PC or PLC...etc.

Parameter		Function	When Enabled	Classification
Pn140	n.0□□□ [Factory setting]	Model following control is not used together with the speed/torque feedforward input.	Immediately	Tuning
	n.1□□□	Model following control is used together with the speed/torque feedforward input.		

Refer to *8 MECHATROLINK-III Commands* for details.

IMPORTANT

- Model following control is used to make optimum feedforward settings in the DRIVER when model following control is used with the feedforward function. Therefore, model following control is not normally used together with either the speed feedforward (VFF) input or torque feedforward (TFF) input from the PC or PLC...etc. However, model following control can be used with the speed feedforward (VFF) input or torque feedforward (TFF) input if required. An improper feedforward input may result in over- shooting.

5.3.3 Related Parameters

The following table lists parameters related to this function and their possibility of being changed while executing this function or of being changed automatically after executing this function.

- Parameters related to this function
  These are parameters that are used or referenced when executing this function.

- Allowed changes during execution of this function
  Yes : Parameters can be changed using SigmaWin+ while this function is being executed.
  No : Parameters cannot be changed using SigmaWin+ while this function is being executed.

- Automatic changes after execution of this function
  Yes : Parameter set values are automatically set or adjusted after execution of this function.
  No : Parameter set values are not automatically set or adjusted after execution of this function.

Parameter	Name	Mid-execution changes	Automatic changes
Pn100	Speed Loop Gain	No	Yes
Pn101	Speed Loop Integral Time Constant	No	Yes
Pn102	Position Loop Gain	No	Yes
Pn103	Moment of Inertia Ratio	No	No
Pn121	Friction Compensation Gain	No	Yes
Pn123	Friction Compensation Coefficient	No	Yes
Pn124	Friction Compensation Frequency Correction	No	No
Pn125	Friction Compensation Gain Correction	No	Yes
Pn401	Torque Reference Filter Time Constant	No	Yes
Pn408	Torque Related Function Switch	Yes	Yes
Pn409	1st Notch Filter Frequency	No	Yes
Pn40A	1st Notch Filter Q Value	No	Yes
Pn40C	2nd Notch Filter Frequency	No	Yes
Pn40D	2nd Notch Filter Q Value	No	Yes
Pn140	Model Following Control Related Switch	Yes	Yes
Pn141	Model Following Control Gain	No	Yes
Pn142	Model Following Control Gain Compensation	No	Yes
Pn143	Model Following Control Bias (Forward Direction)	No	Yes
Pn144	Model Following Control Bias (Reverse Direction)	No	Yes
Pn145	Vibration Suppression 1 Frequency A	No	Yes
Pn146	Vibration Suppression 1 Frequency B	No	Yes
Pn147	Model Following Control Speed Feedforward Compensation	No	Yes
Pn160	Anti-Resonance Control Related Switch	Yes	Yes
Pn161	Anti-Resonance Frequency	No	Yes
Pn163	Anti-Resonance Damping Gain	No	Yes
Pn531	Program JOG Movement Distance	No	No
Pn533	Program JOG Movement Speed	No	No
Pn534	Program JOG Acceleration/Deceleration Time	No	No
Pn535	Program JOG Waiting Time	No	No
Pn536	Number of Times of Program JOG Movement	No	No

5.4 Advanced Autotuning by Reference (Fn202)

Adjustments with advanced autotuning by reference are described below.

IMPORTANT	Advanced autotuning by reference starts adjustments based on the set speed loop gain (Pn100). Therefore, precise adjustments cannot be made if there is vibration when starting adjustments. In this case, make adjustments after lowering the speed loop gain (Pn100) until vibration is eliminated.

5.4.1 Advanced Autotuning by Reference

Advanced autotuning by reference is used to automatically achieve optimum tuning of the DRIVER in response to the user reference inputs from the PC or PLC...etc.

Advanced autotuning by reference is performed generally to fine-tune the DRIVER after advanced autotuning of the DRIVER has been performed.

If the moment of inertia ratio is correctly set to Pn103, advanced autotuning by reference can be performed without performing advanced autotuning.

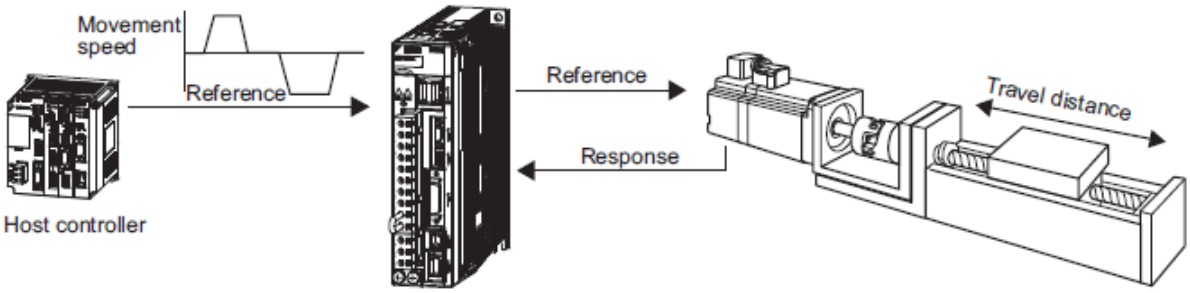

Advanced autotuning by reference performs the following adjustments.

- Gains (e.g., position loop gain and speed loop gain)
- Filters (torque reference filter and notch filter)
- Friction compensation
- Anti-resonance control
- Vibration suppression

Refer to *5.4.3 Related Parameters* for parameters used for adjustments.

⚠ CAUTION
・Because advanced autotuning by reference adjusts the DRIVER during automatic operation, vibra- tion or overshooting may occur. To ensure safety, perform advanced autotuning by reference in a state where the DRIVER can come to an emergency stop at any time.

(1) Preparation

Check the following settings before performing advanced autotuning by reference. The message “NO-OP” indicating that the settings are not appropriate will be displayed, if all of the following conditions are not met.

- The DRIVER must be in Servo Ready status (Refer to *4.8.4*).
- There must be no overtravel.
- The servomotor power must be OFF.
- The position control must be selected when the servomotor power is ON.
- The gain selection switch must be in manual switching mode (Pn139.0 = 0).
- Gain setting 1 must be selected.
- The test without a motor function must be disabled. (Pn00C.0 = 0).
- All warnings must be cleared.
- The write prohibited setting parameter (Fn010) must be set to Write permitted (P.0000).
- The tuning-less function must be disabled (Pn170.0 = 0).

(2) When Advanced Autotuning by Reference Cannot Be Performed Successfully

Advanced autotuning by reference cannot be performed successfully under the following conditions. If the result of autotuning is not satisfactory, perform one-parameter tuning (Fn203). Refer to *5.5 One-parameter Tuning (Fn203)* for details.

- The travel distance in response to references from the PC or PLC...etc. is smaller than the set positioning com- pleted width (Pn522).
- The motor speed in response to references from the PC or PLC...etc. is smaller than the set rotation detection level (Pn502).
- The stopping time, i.e., the period while the positioning completed /COIN signal is OFF, is 10 ms or less.
- The rigidity of the machine is low and vibration occurs when positioning is performed.
- The position integration function is used.
- P control operation (proportional control) is performed.
- The mode switch is used.
- The positioning completed width (Pn522) is too small.

IMPORTANT

- Advanced autotuning by reference starts adjustments based on the positioning com- pleted width (Pn522). Set the electronic gear ratio (Pn20E/Pn210) and positioning completed width (Pn522) to the actual value during operation.
- Unless the positioning completed signal (/COIN) is turned ON within approximately 3 seconds after positioning has been completed, "WAITING" will flash. Furthermore, unless the positioning completed signal (/COIN) is turned ON within approximately 10 seconds, "Error" will flash for 2 seconds and tuning will be aborted.

Change only the overshoot detection level (Pn561) to finely adjust the amount of overshooting without chang- ing the positioning completed width (Pn522). Because Pn561 is set by default to 100%, the allowable amount of overshooting is the same amount as that for the positioning completed width.
When Pn561 is set to 0%, the amount of overshooting can be adjusted without any overshooting in the posi- tioning completed width. If the setting of Pn561 is changed, however, the positioning time may be extended.

Pn561	Overshoot Detection Level		Speed Position Torque		Classification
	Setting Range	Setting Unit	Factory Setting	When Enabled	
	0 to 100	1%	100	Immediately	Setup

5.4.2 Advanced Autotuning by Reference Procedure

The following procedure is used for advanced autotuning by reference.
Advanced autotuning by reference is performed from the SigmaWin+.

⚠ CAUTION

- When using the MP2000 Series with phase control, select the mode = 1 (standard level). If 2 or 3 is selected, phase control of the MP2000 Series may not be possible.

(1) Operating Procedure

Set the correct moment of inertia ratio in Pn103 by using the advanced autotuning before performing this pro- cedure.

In the SigmaWin+ Σ-V component main window, click **Tuning** and then click **Tuning**.

- Moment of Inertia (Mass) Identification
  It is the same as *5.3.2 Advanced Autotuning Procedure*.

- Autotuning with Reference Input
  1. Select the **Position reference input** option under **Reference input from host controller** in the Tuning main window, and then click **Autotuning**. The Autotuning-Setting Conditions box will appear.

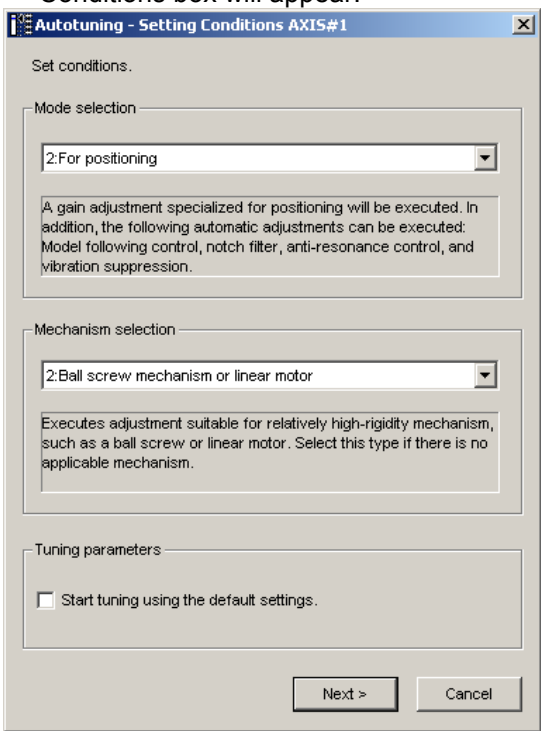

  2. Select the mode from the **Mode selection** combo box and the mechanism from **Mechanism selection** combo box, and then click **Next**. The Autotuning-Moment of Inertia Ratio Setting box will appear. When the **Start tuning using the default settings.** check box is selected in the Autotuning-Setting Conditions box, tuning will be executed using tuning parameters set to the default value.

  · Mode Selection
  Select the mode.
  Mode = 1: Makes adjustments considering response characteristics and stability (Standard level).
  Mode = 2: Makes adjustments for positioning [Factory setting].
  Mode = 3: Makes adjustments for positioning, giving priority to overshooting suppression.

•Type Selection

Select the type according to the machine element to be driven.
If there is noise or the gain does not increase, better results may be obtained by changing the rigidity type.
Type = 1: For belt drive mechanisms (LEFB, LEJB)
Type = 2: For ball screw drive mechanisms [Factory setting] (LEY, LEFS, LEJS)

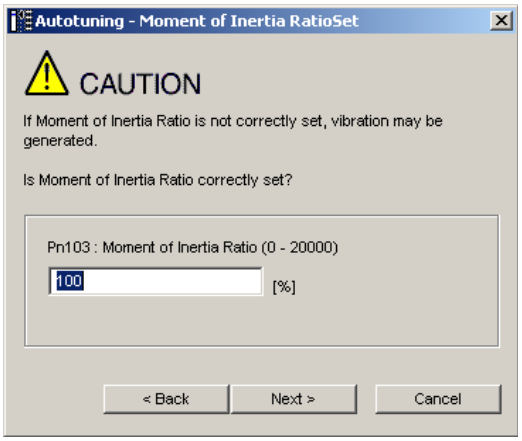

3. Enter the correct moment of inertia ratio and then click **Next**. The following window will appear.

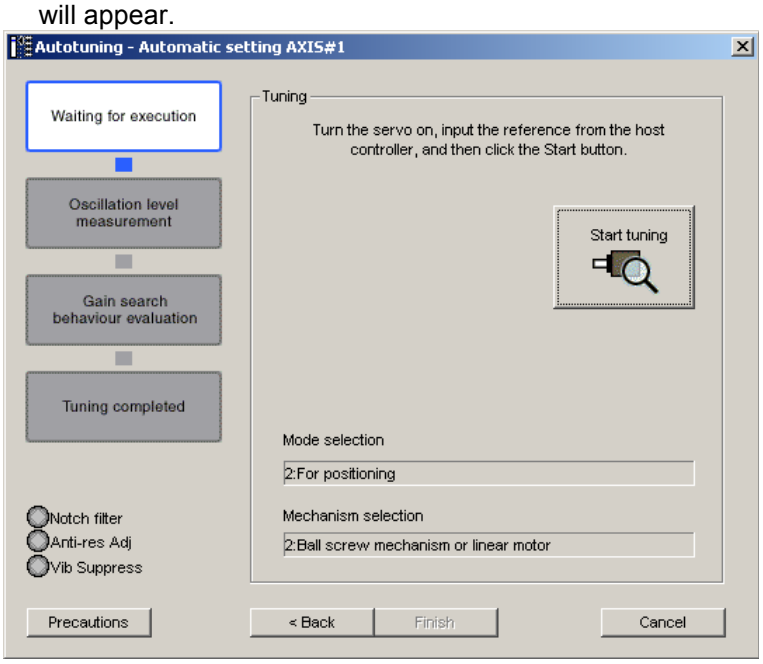

4. Turn the servo on and then input the reference from the host controller. Click **Start tuning** to start tuning.

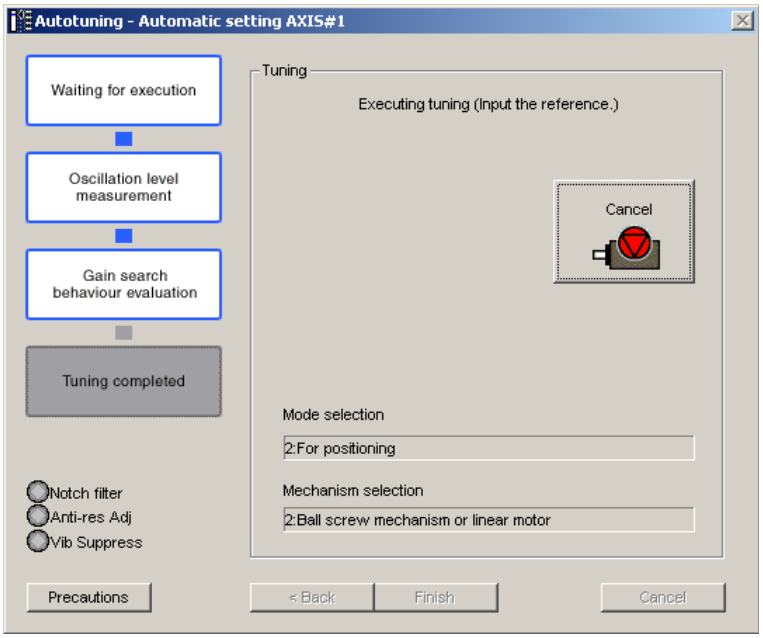

Vibration generated during tuning is automatically detected and the optimum setting for the detected vibration will be made. When setting is completed, the LED indicator lamps (bottom left of the box) of the functions used for the setting will light up.

5. When tuning is complete, click **Finish**. The results of tuning will be written in the parameters.

For more information on the usage of the SigmaWin+, refer to AC Servo Drives Engineering Tool Sigma Win+ ONLINE MANUAL Σ-V Component *4.6.2 Autotuning with Reference Input.*

(2) Failure in Operation

-When "NO-OP" Flashes on the Display

Probable Cause	Corrective Actions
The main circuit power supply was OFF.	Turn ON the main circuit power supply.
An alarm or warning occurred.	Remove the cause of the alarm or the warning.
Overtraveling occurred.	Remove the cause of the overtravel.
Gain setting 2 was selected by gain switching.	Disable the automatic gain switching.
HWBB operated.	Disable the HWBB function.

-When "Error" Flashes on the Display

Error	Probable Cause	Corrective Actions
The gain adjustment was not successfully completed.	Machine vibration is occurring or the positioning completed signal (/COIN) is turning ON and OFF when the servomotor is stopped.	• Increase the set value for Pn522. • Change the mode from 2 to 3. • If machine vibration occurs, suppress the vibration with the anti-resonance control adjustment function and the vibration suppression function.
The positioning completed signal (/COIN) did not turn ON within approximately 10 seconds after positioning adjustment was completed.	The positioning completed width is too narrow or proportional control (P control) is being used.	• Increase the set value for Pn522. • Set 0 to V_PPI of the servo command output signals (SVCMD_IO).

(3) Related Functions on Advanced Autotuning by Reference

This section describes functions related to advanced autotuning by reference.

- Notch Filter

Usually, set this function to Auto Setting. (The notch filter is factory-set to Auto Setting.) If this function is set to Auto Setting, vibration will be detected automatically during advanced autotuning by reference, and the notch filter will be set.

Set this function to Not Auto Setting only if you do not change the notch filter setting before executing advanced autotuning by reference.

Parameter		Function	When Enabled	Classification
Pn460	n.□□□0	Does not set the 1st notch filter automatically with the utility function.	Immediately	Tuning
	n.□□□1 [Factory setting]	Sets the 1st notch filter automatically with the utility function.		
	n.□0□□	Does not set the 2nd notch filter automatically with the utility function.		
	n.□1□□ [Factory setting]	Sets the 2nd notch filter automatically with the utility function.		

- Anti-Resonance Control Adjustment

This function reduces low vibration frequency, which the notch filter does not detect.

Usually, set this function to Auto Setting. (The anti-resonance control is factory-set to Auto Setting.)
When this function is set to Auto Setting, vibration will be automatically detected during advanced autotuning by reference and anti-resonance control will be automatically adjusted and set.

Parameter		Function	When Enabled	Classification
Pn160	n.□□0□	Does not use the anti-resonance control automatically with the utility function.	Immediately	Tuning
	n.□□1□ [Factory setting]	Uses the anti-resonance control automatically with the utility function.		

- Vibration Suppression

The vibration suppression function suppresses transitional vibration at frequency as low as 1 to 100 Hz that is generated mainly when positioning if the machine stand vibrates.

Usually, set this function to Auto Setting. (The vibration suppression function is factory-set to Auto Setting.) When this function is set to Auto Setting, vibration will be automatically detected during advanced autotuning by reference and vibration suppression will be automatically adjusted and set.
Set this function to Not Auto Setting only if you do not change the setting for vibration suppression before executing advanced autotuning by reference.

Note: This function uses model following control. Therefore, the function can be executed only if the mode is set to 2 or 3.

-Related Parameters

Parameter		Function	When Enabled	Classification
Pn140	n.□0□□	Does not use the vibration suppression function automatically.	Immediately	Tuning
	n.□1□□ [Factory setting]	Uses the vibration suppression function automatically.		

- Friction Compensation

This function compensates for changes in the following conditions.

- Changes in the viscous resistance of the lubricant, such as the grease, on the sliding parts of the machine
- Changes in the friction resistance resulting from variations in the machine assembly
- Changes in the friction resistance due to aging

Conditions to which friction compensation is applicable depend on the mode. The friction compensation set- ting in Pn408.3 applies when the mode is 1. Mode = 2 and Mode = 3 are adjusted with the friction compensa- tion function regardless of the friction compensation setting in P408.3.

Friction Compensation Selecting \ Mode		Mode = 1	Mode = 2	Mode = 3
Pn408	n.0□□□ [Factory setting]	Adjusted without the friction compensation function	Adjusted with the friction compensation function	Adjusted with the friction compensation function
	n.1□□□	Adjusted with the friction compensation function		

- Feedforward

If Pn140 is set to the factory setting and the mode setting is changed to 2 or 3, the feedforward gain (Pn109), speed feedforward (VFF) input, and torque feedforward (TFF) input will be disabled.

Set Pn140.3 to 1 if model following control is used together with the speed feedforward (VFF) input and torque feedforward (TFF) input from the PC or PLC...etc.

Parameter		Function	When Enabled	Classification
Pn140	n.0□□□ [Factory setting]	Model following control is not used together with the speed/torque feedforward input.	Immediately	Tuning
	n.1□□□	Model following control is used together with the speed/torque feedforward input.		

Refer to *8 MECHATROLINK-III Commands* for details.

IMPORTANT

- Model following control is used to make optimum feedforward settings in the DRIVER when model following control is used with the feedforward function. Therefore, model following control is not normally used together with either the speed feedfor- ward (VFF) input or torque feedforward (TFF) input from the PC or PLC...etc.. However, model following control can be used with the speed feedforward (VFF) input or torque feedforward (TFF) input if required. An improper feedforward input may result in over- shooting.

5.4.3 Related Parameters

The following table lists parameters related to this function and their possibility of being changed while exe- cuting this function or of being changed automatically after executing this function.

- Parameters related to this function
  These are parameters that are used or referenced when executing this function.

- Allowed changes during execution of this function
  Yes : Parameters can be changed using SigmaWin+ while this function is being executed.
  No : Parameters cannot be changed using SigmaWin+ while this function is being executed.

- Automatic changes after execution of this function
  Yes : Parameter set values are automatically set or adjusted after execution of this function.
  No : Parameter set values are not automatically set or adjusted after execution of this function.

Parameter	Name	Mid-execution changes	Automatic changes
Pn100	Speed Loop Gain	No	Yes
Pn101	Speed Loop Integral Time Constant	No	Yes
Pn102	Position Loop Gain	No	Yes
Pn103	Moment of Inertia Ratio	No	No
Pn121	Friction Compensation Gain	No	Yes
Pn123	Friction Compensation Coefficient	No	Yes
Pn124	Friction Compensation Frequency Correction	No	No
Pn125	Friction Compensation Gain Correction	No	Yes
Pn401	Torque Reference Filter Time Constant	No	Yes
Pn408	Torque Related Function Switch	Yes	Yes
Pn409	1st Notch Filter Frequency	No	Yes
Pn40A	1st Notch Filter Q Value	No	Yes
Pn40C	2nd Notch Filter Frequency	No	Yes
Pn40D	2nd Notch Filter Q Value	No	Yes
Pn140	Model Following Control Related Switch	Yes	Yes
Pn141	Model Following Control Gain	No	Yes
Pn142	Model Following Control Gain Compensation	No	Yes
Pn143	Model Following Control Bias (Forward Direction)	No	Yes
Pn144	Model Following Control Bias (Reverse Direction)	No	Yes
Pn145	Vibration Suppression 1 Frequency A	No	Yes
Pn146	Vibration Suppression 1 Frequency B	No	Yes
Pn147	Model Following Control Speed Feedforward Compensation	No	Yes
Pn160	Anti-Resonance Control Related Switch	Yes	Yes
Pn161	Anti-Resonance Frequency	No	Yes
Pn163	Anti-Resonance Damping Gain	No	Yes

5.5 One-parameter Tuning (Fn203)

Adjustments with one-parameter tuning are described below.

5.5.1 One-parameter Tuning

One-parameter tuning is used to manually make tuning level adjustments during operation with a position ref- erence or speed reference input from the PC or PLC...etc.

One-parameter tuning enables automatically setting related servo gain settings to balanced conditions by adjusting one or two tuning levels.

One-parameter tuning performs the following adjustments.

- Gains (e.g., position loop gain and speed loop gain)
- Filters (torque reference filter and notch filter)
- Friction compensation
- Anti-resonance control

Refer to *5.5.4 Related Parameters* for parameters used for adjustments.

Perform one-parameter tuning if satisfactory response characteristics is not obtained with advanced autotun- ing or advanced autotuning by reference.

To fine-tune each servo gain after one-parameter tuning, refer to *5.8 Additional Adjustment Function*.

⚠ CAUTION

- Vibration or overshooting may occur during adjustment. To ensure safety, perform one-parameter tuning in a state where the DRIVER can come to an emergency stop at any time.

(1) Preparation

Check the following settings before performing one-parameter tuning.
The message “NO-OP” indicating that the settings are not appropriate will be displayed, if all of the following conditions are not met.

- The test without a motor function must be disabled (Pn00C.0 = 0).
- The write prohibited setting parameter (Fn010) must be set to Write permitted (P.0000).
- The tuning-less function must be disabled (Pn170.0 = 0).
- The tuning mode must be set to 0 or 1 when performing speed control.

5.5.2 One-parameter Tuning Procedure

The following procedure is used for one-parameter tuning.

There are the following two operation procedures depending on the tuning mode being used.

- When the tuning mode is set to 0 or 1, the model following control will be disabled and one-parameter tun- ing will be used as the tuning method for applications other than positioning.
- When the tuning mode is set to 2 or 3, the model following control will be enabled and it can be used for tuning for positioning.

One-parameter tuning is performed from the SigmaWin+.

Make sure that the moment of inertia ratio (Pn103) is set correctly using advance autotuning before beginning operation.

The following section provides the operating procedure from the SigmaWin+.

⚠ CAUTION

When using the MP2000 Series with phase control, select the tuning mode = 0 or 1.
If 2 or 3 is selected, phase control of the MP2000 Series may not be possible.

(1)SigmaWin+ Operating Procedure

In the SigmaWin+ Σ-V component main window, click **Tuning** and then click **Tuning**. Click **Advanced adjustment** in the Tuning main window, and then click **Custom tuning** in the Tuning box that will appear. The Custom Tuning - Mode selection box will appear.

For more information on the usage of the SigmaWin+, refer to AC Servo Drives Engineering Tool Sigma Win+ ONLINE MANUAL Σ-V Component *4.6.4 Custom Tuning.*

- Setting the Tuning Mode 0 or 1

·Tuning Mode

Select the tuning mode. Select the tuning mode 0 or 1.
Tuning Mode = 0: Makes adjustments giving priority to stability.
Tuning Mode = 1: Makes adjustments giving priority to responsiveness.

·Type Selection

Select the type according to the machine element to be driven.
If there is noise or the gain does not increase, better results may be obtained by changing the rigidity type.
Type = 1: For belt drive mechanisms (LEFB, LEJB)
Type = 2: For ball screw drive mechanisms [Factory setting] (LEY, LEFS, LEJS)

·Tuning Lebel

Change the tuning level.

Note: The higher the lebel, the greater the responsiveness will be. If the value is too large, however, vibration will occur.

- Setting the Tuning Mode 2 or 3

·Tuning Mode

Select the tuning mode. Select the tuning mode 2 or 3.

Tuning Mode = 2: Enables model following control and makes adjustments for positioning.

Tuning Mode = 3: Enables model following control, makes adjustments for positioning, and suppresses over- shooting.

·Type Selection

Select the type according to the machine element to be driven.

If there is noise or the gain does not increase, better results may be obtained by changing the rigidity type.

Type = 1: For belt drive mechanisms (LEFB, LEJB)

Type = 2: For ball screw drive mechanisms [Factory setting] (LEY, LEFS, LEJS)

·FF Lebel, FB Lebel

Change the FF level and FB level.

Note: The higher the FF lebel, the positioning time will be shorter and the response will be better. If the level is too high, however, overshooting or vibration may occur. Overshooting will be reduced if the FB level is increased.

(2) Related Functions on One-parameter Tuning

This section describes functions related to one-parameter tuning.

- Notch Filter

Usually, set this function to Auto Setting. (The notch filter is factory-set to Auto Setting.) If this function is set to Auto Setting, vibration will be detected automatically during one-parameter tuning and the notch filter will be set.

Set this function to Not Auto Setting only if you do not change the notch filter setting before executing one- parameter tuning.

Parameter		Function	When Enabled	Classification
Pn460	n.□□□0	Does not set the 1st notch filter automatically with the utility function.	Immediately	Tuning
	n.□□□1 [Factory setting]	Sets the 1st notch filter automatically with the utility function.		
	n.□0□□	Does not set the 2nd notch filter automatically with the utility function.		
	n.□1□□ [Factory setting]	Sets the 2nd notch filter automatically with the utility function.		

- Anti-Resonance Control Adjustment

This function reduces low vibration frequency, which the notch filter does not detect.

Usually, set this function to Auto Setting. (The anti-resonance control is factory-set to Auto Setting.)
When this function is set to Auto Setting, vibration will be automatically detected during one-parameter tuning and anti-resonance control will be automatically adjusted and set.

Parameter		Function	When Enabled	Classification
Pn160	n.□□0□	Does not use the anti-resonance control automatically with the utility function.	Immediately	Tuning
	n.□□1□ [Factory setting]	Uses the anti-resonance control automatically with the utility function.		

- Friction Compensation

This function compensates for changes in the following conditions.

- Changes in the viscous resistance of the lubricant, such as the grease, on the sliding parts of the machine
- Changes in the friction resistance resulting from variations in the machine assembly
- Changes in the friction resistance due to aging

Conditions to which friction compensation is applicable depend on the tuning mode. The friction compensa- tion setting in F408.3 applies when the mode is 0 or 1. Tuning Mode = 2 and Tuning Mode = 3 are adjusted with the friction compensation function regardless of the friction compensation setting in P408.3.

Friction Compensation Selecting \ Mode		Tuning Mode = 0	Tuning Mode = 1	Tuning Mode = 2	Tuning Mode = 3
Pn408	n.0□□□ [Factory setting]	Adjusted without the friction compensation function	Adjusted without the friction compensation function	Adjusted with the frictioncompensation function	Adjusted with the frictioncompensation function
	n.1□□□	Adjusted with the frictioncompensation function	Adjusted with the frictioncompensation function		

- Feedforward

If Pn140 is set to the factory setting and the tuning mode setting is changed to 2 or 3, the feedforward gain (Pn109), speed feedforward (VFF) input, and torque feedforward (TFF) input will be disabled.

Set Pn140.3 to 1 if model following control is used together with the speed feedforward (VFF) input and torque feedforward (TFF) input from the PC or PLC...etc.

Parameter		Function	When Enabled	Classification
Pn140	n.0□□□ [Factory setting]	Model following control is not used together with the speed/torque feedforward input.	Immediately	Tuning
	n.1□□□	Model following control is used together with the speed/torque feedforward input.		

Refer to *8 MECHATROLINK-III Commands* for details.

IMPORTANT

- Model following control is used to make optimum feedforward settings in the DRIVER when model following control is used with the feedforward function. Therefore, model following control is not normally used together with either the speed feedfor- ward (VFF) input or torque feedforward (TFF) input from the PC or PLC...etc. However, model following control can be used with the speed feedforward (VFF) input or torque feedforward (TFF) input if required. An improper feedforward input may result in over- shooting.

5.5.3 One-parameter Tuning Example

The following procedure is used for one-parameter tuning on the condition that the tuning mode is set to 2 or 3. This mode is used to reduce positioning time.

Step	Measuring Instrument Display Example	Operation
1	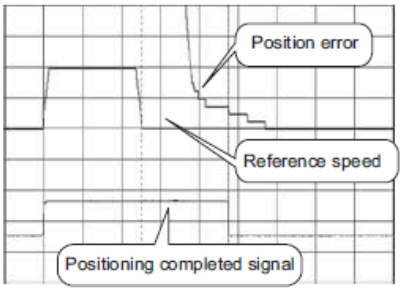	Measure the positioning time after setting the moment of inertia ratio (Pn103) correctly. Tuning will be completed if the specifications are met here. The tuning results will be saved in the DRIVER.
2	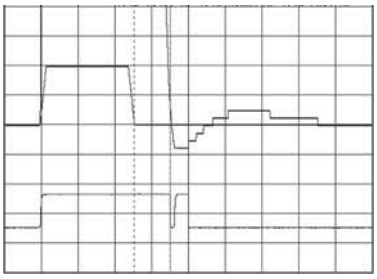	The positioning time will become shorter if the FF level is increased. The tuning will be completed if the specifications are met. The tuning results will be saved in the DRIVER. If overshooting occurs before the specifications are met, go to step 3.
3	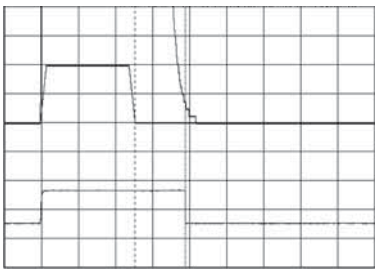	Overshooting will be reduced if the FB level is increased. If the overshooting is eliminated, go to step 4.
4	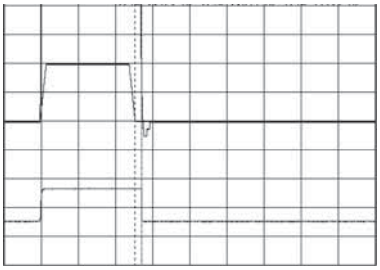	The graph shows overshooting generated with the FF level increased after step 3. In this state, the overshooting occurs, but the positioning settling time is shorter. The tuning will be completed if the specifications are met. The adjustment results are saved in the DRIVER. If overshooting occurs before the specifications are met, repeat steps 3 and 4. If vibration occurs before the overshooting is eliminated, the vibration will be suppressed by the automatic notch filter and anti-resonance control. Note: The vibration frequencies may not be detected if the vibration is too small. If that occurs, forcibly detect the vibration frequencies.
5		The adjustment results are saved in the DRIVER.

5.5.4 Related Parameters

The following table lists parameters related to this function and their possibility of being changed while executing this function or of being changed automatically after executing this function.

- Parameters related to this function
  These are parameters that are used or referenced when executing this function.

- Allowed changes during execution of this function
  Yes : Parameters can be changed using SigmaWin+ while this function is being executed.
  No : Parameters cannot be changed using SigmaWin+ while this function is being executed.

- Automatic changes after execution of this function
  Yes : Parameter set values are automatically set or adjusted after execution of this function.
  No : Parameter set values are not automatically set or adjusted after execution of this function.

Parameter	Name	Mid-execution changes	Automatic changes
Pn100	Speed Loop Gain	No	Yes
Pn101	Speed Loop Integral Time Constant	No	Yes
Pn102	Position Loop Gain	No	Yes
Pn103	Moment of Inertia Ratio	No	No
Pn121	Friction Compensation Gain	No	Yes
Pn123	Friction Compensation Coefficient	No	Yes
Pn124	Friction Compensation Frequency Correction	No	No
Pn125	Friction Compensation Gain Correction	No	Yes
Pn401	Torque Reference Filter Time Constant	No	Yes
Pn408	Torque Related Function Switch	Yes	Yes
Pn409	1st Notch Filter Frequency	No	Yes
Pn40A	1st Notch Filter Q Value	No	Yes
Pn40C	2nd Notch Filter Frequency	No	Yes
Pn40D	2nd Notch Filter Q Value	No	Yes
Pn140	Model Following Control Related Switch	Yes	Yes
Pn141	Model Following Control Gain	No	Yes
Pn142	Model Following Control Gain Compensation	No	Yes
Pn143	Model Following Control Bias (Forward Direction)	No	Yes
Pn144	Model Following Control Bias (Reverse Direction)	No	Yes
Pn145	Vibration Suppression 1 Frequency A	No	No
Pn146	Vibration Suppression 1 Frequency B	No	No
Pn147	Model Following Control Speed Feedforward Compensation	No	Yes
Pn160	Anti-Resonance Control Related Switch	Yes	Yes
Pn161	Anti-Resonance Frequency	No	Yes
Pn163	Anti-Resonance Damping Gain	No	Yes

5.6 Anti-Resonance Control Adjustment Function (Fn204)

This section describes the anti-resonance control adjustment function.

5.6.1 Anti-Resonance Control Adjustment Function

The anti-resonance control adjustment function increases the effectiveness of the vibration suppression after one-parameter tuning. This function is effective in supporting anti-resonance control adjustment if the vibra- tion frequencies are from 100 to 1000 Hz.

This function rarely needs to be used because it is automatically set by the advanced autotuning or advanced autotuning by reference input. Use this function only if fine-tuning is required, or vibration detection is failed and readjustment is required.

Perform one-parameter tuning (Fn203) or use another method to improve the response characteristics after performing this function. If the anti-resonance gain is increased with one-parameter tuning performed, vibra- tion may result again. If that occurs, perform this function again to fine-tune the settings.

⚠ CAUTION

- If this function is executed, related parameters will be set automatically. Therefore, there will be a large response change after this function is executed. Enable the function in a state where the machine can come to an emergency stop at any time to ensure the safety operation of the machine.
- Be sure to set a suitable value for the moment of inertia ratio (Pn103) using advanced autotuning before executing the anti-resonance control adjustment function. If the setting greatly differs from the actual moment of inertia ratio, normal control of the machine may not be possible, and vibration may result.

IMPORTANT

- This function detects vibration between 100 and 1000 Hz. Vibration will not be detected for frequencies outside of this range, and instead, "F----" will be displayed. If that occurs, use one-parameter tuning with tuning mode 2 selected to automatically set a notch filter or use the vibration suppression function (Fn205).
- Vibration can be reduced more effectively by increasing the anti-resonance damping gain (Pn163). The amplitude of vibration may become larger if the damping gain is excessively high. Increase the damping gain from about 0% to 200% in 10% incre- ments while checking the effect of vibration reduction. If the effect of vibration reduc- tion is still insufficient at a gain of 200%, cancel the setting, and lower the control gain using a different method, such as one-parameter tuning.

(1) Before Performing Anti-Resonance Control Adjustment Function

Check the following settings before performing anti-resonance control adjustment function. The message “NO-OP” indicating that the settings are not appropriate will be displayed, if all of the following conditions are not met.

- The tuning-less function must be disabled (Pn170.0 = 0).
- The test without a motor function must be disabled (Pn00C.0 = 0).
- The control must not be set to torque control.
- The write prohibited setting parameter (Fn010) must be set to Write permitted (P.0000).

5.6.2 Anti-Resonance Control Adjustment Function Operating Procedure

With this function, an operation reference is sent, and the function is executed while vibration is occurring.

Anti-resonance control adjustment function is performed from the SigmaWin+. The following methods can be used for the anti-resonance control adjustment function.

- Using anti-resonance control for the first time
- With undetermined vibration frequency
- With determined vibration frequency
- For fine-tuning after adjusting the anti-resonance control

The following describes the operating procedure from the digital operator.

In the SigmaWin+ Σ-V component main window, click **Tuning** and then click **Tuning**.
In the Tuning main window, click Advanced adjustment, Custom tuning, and then Anti-resonance control.
For more information on the usage of the SigmaWin+, refer to AC Servo Drives Engineering Tool Sigma Win+ ONLINE MANUAL Σ-V Component *4.6.6 Anti-resonance Control Adjustment Function.*

Note:
If vibration is not detected even when vibration is occurring, lower the vibration detection sensitivity (Pn311). When this parameter is lowered, the detection sensitivity will be increased. Vibration may not be detected accurately if too small value is set.

Increase the damping gain from about 0% to 200% in 10% increments while checking the effect of vibration reduction. If vibration reduction is still insufficient at a gain of 200%, cancel the setting, and lower the control gain by using a different method, such as one-parameter tuning.

5.6.3 Related Parameters

The following table lists parameters related to this function and their possibility of being changed while executing this function or of being changed automatically after executing this function.

- Parameters related to this function
  These are parameters that are used or referenced when executing this function.

- Allowed changes during execution of this function
  Yes : Parameters can be changed using SigmaWin+ while this function is being executed.
  No : Parameters cannot be changed using SigmaWin+ while this function is being executed.

- Automatic changes after execution of this function
  Yes : Parameter set values are automatically set or adjusted after execution of this function.
  No : Parameter set values are not automatically set or adjusted after execution of this function.

Parameter	Name	Mid-execution changes	Automatic changes
Pn160	Anti-Resonance Control Related Switch	Yes	Yes
Pn161	Anti-Resonance Frequency	No	Yes
Pn162	Anti-Resonance Gain Compensation	Yes	No
Pn163	Anti-Resonance Damping Gain	No	Yes
Pn164	Anti-Resonance Filter Time Constant 1 Compensation	Yes	No
Pn165	Anti-Resonance Filter Time Constant 2 Compensation	Yes	No

5.7 Vibration Suppression Function (Fn205)

The vibration suppression function is described in this section.

5.7.1 Vibration Suppression Function

The vibration suppression function suppresses transitional vibration at frequency as low as 1 to 100 Hz that is generated mainly when positioning if the machine stand vibrates.

This function is set automatically when advanced autotuning or advanced autotuning by reference is executed. In most cases, this function is not necessary. Use this function only if fine-tuning is required or readjustment is required as a result of a failure to detect vibration.

Perform one-parameter tuning (Fn203) if required to improve the response characteristics after performing this function.

⚠ CAUTION

- If this function is executed, related parameters will be set automatically. Therefore, there will be a large response change after this function is enabled or disabled. Enable the function in a state where the machine can come to an emergency stop at any time to ensure the safety operation of the machine.
- Be sure to set a suitable value for the moment of inertia ratio (Pn103) using advanced autotuning before executing the vibration suppression function. If the setting greatly differs from the actual moment of inertia ratio, normal control of the DRIVER may not be possible, and vibration may result.
- Phase control of the MP2000 Series may not be possible, if the vibration suppression function is performed when using the MP2000 Series with phase control.

IMPORTANT

- This function detects vibration frequency between 1 to 100 Hz. Vibration will not be detected for frequencies outside of this range, and instead, "F-----" will be displayed.
- Frequency detection will not be performed if no vibration results from position error or the vibration frequencies are outside the range of detectable frequencies. If so, use a device, such as a displacement sensor or vibration sensor, to measure the vibration frequency.
- If vibration frequencies automatically detected are not suppressed, the actual frequency and the detected frequency may differ. Fine-tune the detected frequency if necessary.

(1) Preparation

Check the following settings before performing the vibration suppression function.
The message “NO-OP” indicating that the settings are not appropriate will be displayed, if all of the following conditions are not met.

- The control must be set to position control.
- The tuning-less function must be disabled (Pn170.0 = 0).
- The test without a motor function must be disabled (Pn00C.0 = 0).
- The write prohibited setting parameter (Fn010) must be set to Write permitted (P.0000).

(2)Items Influencing Performance

If continuous vibration occurs when the servomotor is not rotating, the vibration suppression function cannot be used to suppress the vibration effectively. If the result is not satisfactory, perform anti-resonance control adjustment function (Fn204) or one-parameter tuning (Fn203).

(3) Detection of Vibration Frequencies

No frequency detection may be possible if the vibration does not appear as a position error or the vibration resulting from the position error is too small.

The detection sensitivity can be adjusted by changing the setting for the remained vibration detection width (Pn560) which is set as a percentage of the positioning completed width (Pn522). Perform the detection of vibration frequencies again after adjusting the remained vibration detection width (Pn560).

Pn560	Remained Vibration Detection Width Position				Classification
	Setting Range	Setting Unit	Factory Setting	When Enabled	
	1 to 3000	0.1%	400	Immediately	Setup

Note: As a guideline, change the setting 10% at a time. The smaller the set value is, the higher the detection sensitivity will be. If the value is too small, however, the vibration may not be detected accurately.
The vibration frequencies that are automatically detected may vary somewhat with each positioning operation. Perform positioning several times and make adjustments while checking the effect of vibration suppression.

5.7.2 Vibration Suppression Function Operating Procedure

The following procedure is used for vibration suppression function.

Vibration suppression function is performed from the SigmaWin+. The operating procedure from the SigmaWin+ is described here.

(1) Operating Procedure

In the SigmaWin+ Σ-V component main window, click **Tuning** and then click **Tuning**.
In the Tuning main window, click **Custom tuning,** and then **Vibration suppression.**

For more information on the usage of the SigmaWin+, refer to AC Servo Drives Engineering Tool Sigma Win+ ONLINE MANUAL Σ-V Component *4.6.7 Vibration Suppression Function.*

Note:
Frequency detection will not be performed if there is no vibration or the vibration frequency is outside the range of detectable frequencies. If the vibration frequencies are not detected, prepare a means of detecting and measuring the vibration. When the vibration frequencies are measured, manually set the measured vibration frequency.

IMPORTANT

No settings related to the vibration suppression function will be changed during operation.
If the servomotor does not stop approximately 10 seconds after the setting changes, a timeout error will result and the previous setting will be automatically enabled again. The vibration suppression function will be enabled in sets the displayed frequency. The motor response, however, will change when the servomotor comes to a stop with no reference input.

(2) Related Function on Vibration Suppression Function

This section describes functions related to vibration suppression function.

-Feedforward

The feedforward gain (Pn109), speed feedforward (VFF) input, and torque feedforward (TFF) input will be disabled in the factory setting.

Set Pn140.3 to 1 if model following control is used together with the speed feedforward (VFF) input and torque feedforward (TFF) input from the PC or PLC...etc.

Parameter		Function	When Enabled	Classification
Pn140	n.0□□□ [Factory setting]	Model following control is not used together with the speed/torque feedforward input.	Immediately	Tuning
	n.1□□□	Model following control is used together with the speed/torque feedforward input.		

Refer to *8. MECHATROLINK-III Commands* for details.

IMPORTANT

Model following control is used to make optimum feedforward settings in the DRIVER when model following control is used with the feedforward function. Therefore, model following control is not normally used together with either the speed feedfor- ward (VFF) input or torque feedforward (TFF) input from the PC or PLC...etc. However, model following control can be used with the speed feedforward (VFF) input or torque feedforward (TFF) input if required. An improper feedforward input may result in over-shooting.

5.7.3 Related Parameters

The following table lists parameters related to this function and their possibility of being changed while executing this function or of being changed automatically after executing this function.

- Parameters related to this function
  These are parameters that are used or referenced when executing this function.

- Allowed changes during execution of this function
  Yes : Parameters can be changed using SigmaWin+ while this function is being executed.
  No : Parameters cannot be changed using SigmaWin+ while this function is being executed.

- Automatic changes after execution of this function
  Yes : Parameter set values are automatically set or adjusted after execution of this function.
  No : Parameter set values are not automatically set or adjusted after execution of this function.

Parameter	Name	Mid-execution changes	Automatic changes
Pn140	Model Following Control Related Switch	Yes	Yes
Pn141	Model Following Control Gain	No	Yes
Pn142	Model Following Control Gain Compensation	No	No
Pn143	Model Following Control Bias (Forward Direction)	No	No
Pn144	Model Following Control Bias (Reverse Direction)	No	No
Pn145	Vibration Suppression 1 Frequency A	No	Yes
Pn146	Vibration Suppression 1 Frequency B	No	Yes
Pn147	Model Following Control Speed Feedforward Compensation	No	No
Pn14A	Vibration Suppression 2 Frequency	No	No
Pn14B	Vibration Suppression 2 Compensation	No	No

5.8 Additional Adjustment Function

This section describes the functions that can be used for additional fine tuning after making adjustments with advanced autotuning, advanced autotuning by reference, or one-parameter tuning.

- Switching gain settings
- Friction compensation
- Current control mode selection
- Current gain level setting
- Speed detection method selection

5.8.1 Switching Gain Settings

Two gain switching functions are available, manual switching and automatic switching. The manual switching function uses an external input signal to switch gains, and the automatic switching function switches gains automatically.

By using the gain switching function, the positioning time can be shortened by increasing the gain during positioning and vibration can be suppressed by decreasing the gain while it is stopped.

Parameter		Function	When Enabled	Classification
Pn139	n.□□□0 [Factory setting]	Manual gain switching	Immediately	Tuning
	n.□□□2	Automatic gain switching		

Note: n.□□□1 is reserved. Do not use.

For the gain combinations for switching, refer to *(1) Gain Combinations for Switching*. For the manual gain switching, refer to *(2) Manual Gain Switching*.
For the automatic gain switching, refer to *(3) Automatic Gain Switching*.

(1) Gain Combinations for Switching

Setting	Speed Loop Gain	Speed Loop Integral Time Constant	Position Loop Gain	Torque Reference Filter	Model Following Control Gain	Model Following Control Gain Compensation	Friction Compensation Gain
Gain Setting 1	Pn100 Speed Loop Gain	Pn101 Speed Loop Integral Time Constant	Pn102 Position Loop Gain	Pn401 Torque Reference Filter Time Constant	Pn141* Model Following Control Gain	Pn142* Model Following Control Gain Compensation	Pn121 Friction Compensation Gain
Gain Setting 2	Pn104 2nd Speed Loop Gain	Pn105 2nd Speed Loop Integral Time Constant	Pn106 2nd Position Loop Gain	Pn412 1st Step 2nd Torque Reference Filter Time Constant	Pn148* 2nd Model Following Control Gain	Pn149* 2nd Model Following Control Gain Compensation	Pn122 2nd Gain for Friction Compensation

∗ The switching gain settings for the model following control gain and the model following control gain compensation are available only for manual gain switching. To enable the gain switching of these parameters, a gain switching input signal must be sent, and the following conditions must be met.
- No command being executed.
- Motor having been completely stopped.

If these conditions are not satisfied, the applicable parameters will not be switched although the other parameters shown in this table will be switched.

(2) Manual Gain Switching

Manual gain switching uses G-SEL of the servo command output signals (SVCMD_IO) to switch between gain setting 1 and gain setting 2.

Type	Command Name	Setting	Meaning
Input	G-SEL of the servo command output signals (SVCMD_IO)	0	Switches to gain setting 1.
		1	Switches to gain setting 2.

(3) Automatic Gain Switching

Automatic gain switching is enabled only in position control. The switching conditions are specified using the following settings.

Parameter Setting		Switching Condition	Setting	Switching Wait Time	Switching Time
Pn139	n.□□□2	Condition A satisfied.	Gain setting 1 to gain setting 2	Pn135 Gain Switching Waiting Time 1	Pn131 Gain Switching Time 1
		Condition A not satisfied.	Gain setting 2 to gain setting 1	Pn136 Gain Switching Waiting Time 2	Pn132 Gain Switching Time 2

Select one of the following settings for switching condition A.

Parameter		Switching Condition A for Position Control	For Other than Position Control (No Switching)	When Enabled	Classification
Pn139	n.□□0□ [Factory setting]	Positioning completed signal (/COIN) ON	Fixed in gain setting 1	Immediately	Tuning
	n.□□1□	Positioning completed signal (/COIN) OFF	Fixed in gain setting 2		
	n.□□2□	Positioning near signal (/NEAR) ON	Fixed in gain setting 1		
	n.□□3□	Positioning near signal (/NEAR) OFF	Fixed in gain setting 2		
	n.□□4□	No output for position reference filter and position reference input OFF	Fixed in gain setting 1		
	n.□□5□	Position reference input ON	Fixed in gain setting 2		

Automatic switching pattern 1 (Pn139.0 = 2)

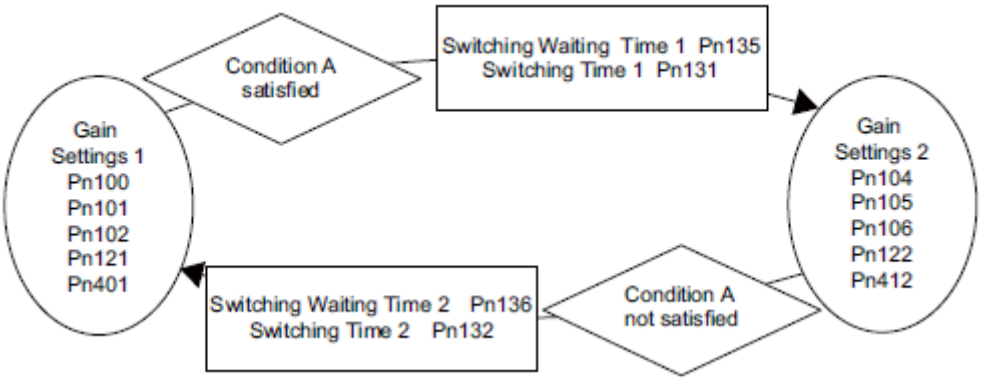

- Relationship between the Waiting and Switching Times for Gain Switching

In this example, the "positioning completed signal (/COIN) ON" condition is set as condition A for automatic gain switching. The position loop gain is switched from the value in Pn102 (position loop gain) to the value in Pn106 (2nd position loop gain). When the /COIN signal goes ON, the switching operation begins after the waiting time set in Pn135. The switching operation changes the position loop gain linearly from Pn102 to Pn106 within the switching time set in Pn131.

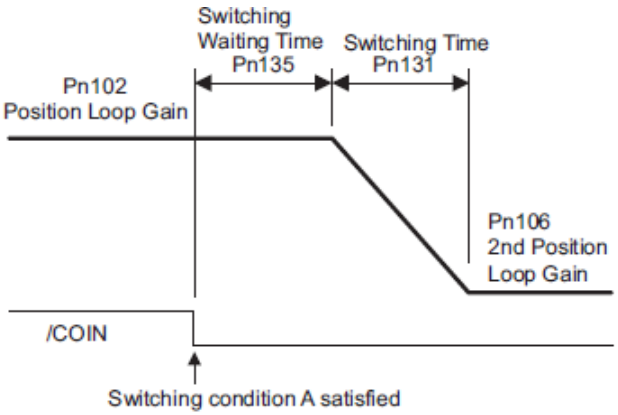

Note: Automatic gain switching is available in the PI and I-P controls (Pn10B).

(4) Related Parameters

Pn100	Speed Loop Gain		Speed	Position	Classification
	Setting Range	Setting Unit	Factory Setting	When Enabled	
	10 to 20000	0.1 Hz	400	Immediately	Tuning
Pn101	Speed Loop Integral Time Constant		Speed	Position	Classification
	Setting Range	Setting Unit	Factory Setting	When Enabled	
	15 to 51200	0.01 ms	2000	Immediately	Tuning
Pn102	Position Loop Gain			Position	Classification
	Setting Range	Setting Unit	Factory Setting	When Enabled	
	10 to 20000	0.1/s	400	Immediately	Tuning
Pn401	Torque Reference Filter Time Constant		Speed Position	Torque	Classification
	Setting Range	Setting Unit	Factory Setting	When Enabled	
	0 to 65535	0.01 ms	100	Immediately	Tuning
Pn141	Model Following Control Gain			Position	Classification
	Setting Range	Setting Unit	Factory Setting	When Enabled	
	10 to 20000	0.1/s	500	Immediately	Tuning
Pn142	Model Following Control Gain Compensation			Position	Classification
	Setting Range	Setting Unit	Factory Setting	When Enabled	
	500 to 2000	0.1%	1000	Immediately	Tuning
Pn121	Friction Compensation Gain		Speed	Position	Classification
	Setting Range	Setting Unit	Factory Setting	When Enabled	
	10 to 1000	1%	100	Immediately	Tuning
Pn104	2nd Speed Loop Gain		Speed	Position	Classification
	Setting Range	Setting Unit	Factory Setting	When Enabled	
	10 to 20000	0.1 Hz	400	Immediately	Tuning

(cont'd)

Pn105	2nd Speed Loop Integral Time Constant		Speed	Position	Classification
	Setting Range	Setting Unit	Factory Setting	When Enabled	
	15 to 51200	0.01 ms	2000	Immediately	Tuning
Pn106	2nd Position Loop Gain			Position	Classification
	Setting Range	Setting Unit	Factory Setting	When Enabled	
	10 to 20000	0.1/s	400	Immediately	Tuning
Pn412	1st Step 2nd Torque Reference Filter Time Constant		Speed Position	Torque	Classification
	Setting Range	Setting Unit	Factory Setting	When Enabled	
	0 to 65535	0.01 ms	100	Immediately	Tuning
Pn148	2nd Model Following Control Gain			Position	Classification
	Setting Range	Setting Unit	Factory Setting	When Enabled	
	10 to 20000	0.1/s	500	Immediately	Tuning
Pn149	2nd Model Following Control Gain Compensation			Position	Classification
	Setting Range	Setting Unit	Factory Setting	When Enabled	
	500 to 2000	0.1%	1000	Immediately	Tuning
Pn122	2nd Gain for Friction Compensation		Speed	Position	Classification
	Setting Range	Setting Unit	Factory Setting	When Enabled	
	10 to 1000	1%	100	Immediately	Tuning

(5) Parameters for Automatic Gain Switching

Pn131	Gain Switching Time 1			Position	Classification
	Setting Range	Setting Unit	Factory Setting	When Enabled	
	0 to 65535	1 ms	0	Immediately	Tuning
Pn132	Gain Switching Time 2			Position	Classification
	Setting Range	Setting Unit	Factory Setting	When Enabled	
	0 to 65535	1 ms	0	Immediately	Tuning
Pn135	Gain Switching Waiting Time 1			Position	Classification
	Setting Range	Setting Unit	Factory Setting	When Enabled	
	0 to 65535	1 ms	0	Immediately	Tuning
Pn136	Gain Switching Waiting Time 2			Position	Classification
	Setting Range	Setting Unit	Factory Setting	When Enabled	
	0 to 65535	1 ms	0	Immediately	Tuning

(6) Related Monitor

Monitor No. (Un)	Name	Value	Remarks
Un014	Effective gain monitor	1	For gain setting 1
		2	For gain setting 2

Note: When using the tuning-less function, gain setting 1 is enabled.

Parameter No.	Analog Monitor	Name	Output Value	Remarks
Pn006 Pn007	n.□□0B	Effective gain monitor	1 V	Gain setting 1 is enabled.
			2 V	Gain setting 2 is enabled.

5.8.2 Manual Adjustment of Friction Compensation

Friction compensation rectifies the viscous friction change and regular load change.

The friction compensation function can be automatically adjusted with advanced autotuning (Fn201), advanced autotuning by reference input (Fn202), or one-parameter tuning (Fn203). This section describes the steps to follow if manual adjustment is required.

(1) Required Parameter Settings

The following parameter settings are required to use friction compensation.

Parameter		Function	When Enabled	Classification
Pn408	n.0□□□ [Factory setting]	Does not use friction compensation.	Immediately	Setup
	n.1□□□	Uses friction compensation.		

Pn121	Friction Compensation Gain		Speed	Position	Classification
	Setting Range	Setting Unit	Factory Setting	When Enabled	
	10 to 1000	1%	100	Immediately	Tuning
Pn123	Friction Compensation Coefficient		Speed	Position	Classification
	Setting Range	Setting Unit	Factory Setting	When Enabled	
	0 to 100	1%	0	Immediately	Tuning
Pn124	Friction Compensation Frequency Correction		Speed	Position	Classification
	Setting Range	Setting Unit	Factory Setting	When Enabled	
	-10000 to 10000	0.1 Hz	0	Immediately	Tuning
Pn125	Friction Compensation Gain Correction		Speed	Position	Classification
	Setting Range	Setting Unit	Factory Setting	When Enabled	
	1 to 1000	1%	100	Immediately	Tuning

(2) Operating Procedure for Friction Compensation

The following procedure is used for friction compensation.

⚠ CAUTION
Before using friction compensation, set the moment of inertia ratio (Pn103) as accurately as possible. If the wrong moment of inertia ratio is set, vibration may result.

Step	Operation
1	Set the following parameters for friction compensation to the factory setting as follows. Friction compensation gain (Pn121): 100 Friction compensation coefficient (Pn123): 0 Friction compensation frequency correction (Pn124): 0 Friction compensation gain correction (Pn125): 100 Note: Always use the factory-set values for friction compensation frequency correction (Pn124) and friction compensation gain correction (Pn125).
2	To check the effect of friction compensation, gradually increase the friction compensation coefficient (Pn123). Note: Usually, set the friction compensation coefficient value to 95% or less. If the effect is insufficient, increase the friction compensation gain (Pn121) by 10% increments until it stops vibrating. Effect of Parameters for Adjustment Pn121: Friction Compensation Gain This parameter sets the responsiveness for external disturbance. The higher the set value is, the better the responsiveness will be. If the equipment has a resonance frequency, however, vibration may result if the set value is excessively high. Pn123: Friction Compensation Coefficient This parameter sets the effect of friction compensation. The higher the set value is, the more effective friction compensation will be. If the set value is excessively high, however, the vibration will occur easily. Usually, set the value to 95% or less.
3	Effect of Adjustment The following graph shows the responsiveness with and without proper adjustment. 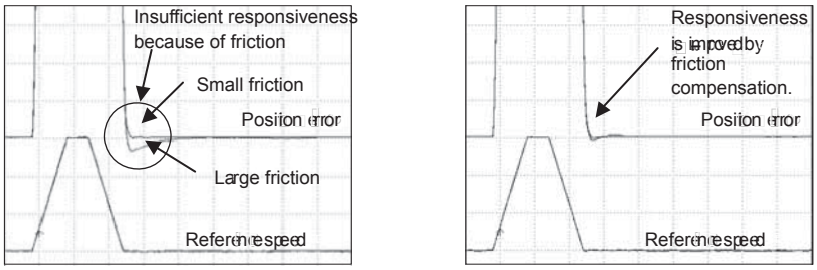 Without friction compensation With friction compensation

5.8.3 Current Control Mode Selection Function

This function reduces high-frequency noises while the servomotor is being stopped. This function is enabled by default and set to be effective under different application conditions. Set Pn009.1 = 1 to use this function.

*This function can not be used with LECYU2-V□.

Parameter		Meaning	When Enabled	Classification
Pn009	n. □□0□	Selects the current control mode 1.	After restart	Tuning
	n. □□1□ [Factory setting]	Selects the current control mode 2 (low noise).		

5.8.4 Current Gain Level Setting

This function reduces noises by adjusting the parameter value for current control inside the DRIVER according to the speed loop gain (Pn100). The noise level can be reduced by reducing the current gain level (Pn13D) from its factory setting of 2000% (disabled). If the set value of Pn13D is decreased, the level of noise will be lowered, but the response characteristics of the DRIVER will also be degraded. Adjust the current gain level within the allowable range at which DRIVER response characteristics can be secured.

Pn13D	Current Gain Level		Speed Position		Classification
	Setting Range	Setting Unit	Factory Setting	When Enabled	
	100 to 2000	1%	2000	Immediately	Tuning

IMPORTANT

- If the parameter setting of the current gain level is changed, the responses character- istics of the speed loop will also change. The DRIVER must, therefore, be read- justed again.

5.8.5 Speed Detection Method Selection

This function can ensure smooth movement of the servomotor while the servomotor is running. Set the value of Pn009.2 to 1 and select speed detection 2 to smooth the movement of the servomotor while the servomotor is running.

Parameter		Meaning	When Enabled	Classification
Pn009	n. □0□□ [Factory setting]	Selects speed detection 1.	After restart	Tuning
	n. □1□□	Selects speed detection 2.		

IMPORTANT

- If the speed detection method is changed, the response characteristics of the speed loop will change and the DRIVER must be readjusted again.

5.8.6 Backlash Compensation Function

(1) Overview

When driving a machine with backlash, there will be a deviation between the travel distance in the position reference that is managed by the PC or PLC...etc. and the travel distance of the actual machine. Use backlash compensation function to add the backlash compensation value to the position reference and use the result to drive the servomotor. This means that the travel distance of the actual machine will be the same as the travel distance in the PC or PLC...etc.

Note 1. This function is supported only for position control.
2. Software version 0023 or higher is required to use this function. For details, refer to *6.13 Product Information Display*.

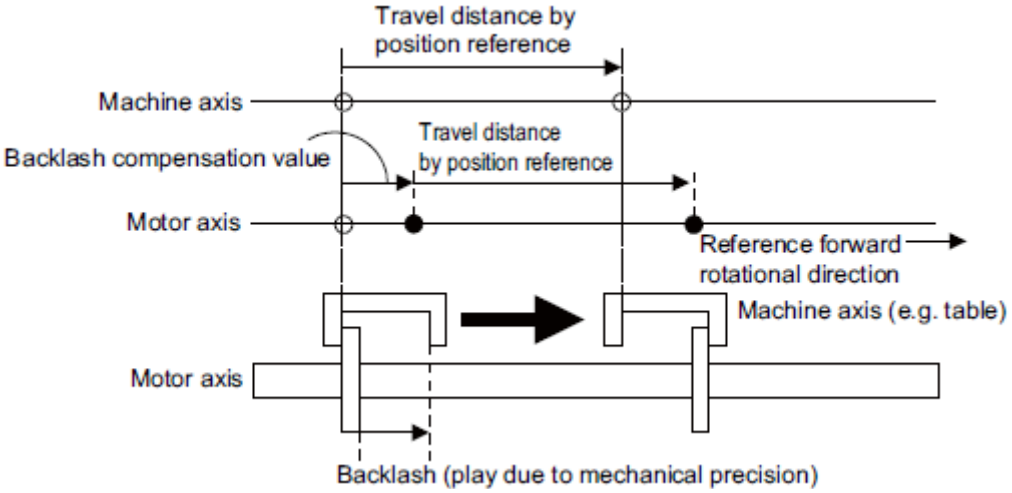

(2) Related Parameter

Set the following parameter to use backlash compensation.

- Backlash Compensation Direction

Set the direction in which to apply backlash compensation.

Parameter		Function	When Enabled	Classification
Pn230	n. □□□0 [Factory setting]	Compensates with a reference in the forward direction.	After restart	Setup
	n. □□□1	Compensates with a reference in the reverse direction.		

- Backlash Compensation Value

Set the amount of backlash compensation to add to the position reference.
The amount is set in increments of 0.1 reference unit. However, when the amount is converted to encoder pulses, it is rounded off at the decimal point.

Example: If Pn231 is set to 6,553.6 [reference unit] and the electronic gear ratio (Pn20E/Pn210) is set to 4/1, then the pulse equivalent is 6,553.6 × 4 = 26,214.4 [pulses].
⇒The backlash compensation value will be 26,214 encoder pulses.

Pn231	Backlash compensation value			Position	Classification
	Setting Range	Setting Unit	Factory Setting	When Enabled	
	-500000 to 500000	0.1 reference unit	0	Immediately	Setup

IMPORTANT

- The backlash compensation value is restricted by the following formula. The specified compensation is not performed if this condition is not met.

$$Pn231 \leq \frac{Pn210}{Pn20E} \times \frac{\text{Maximum motor speed [min}^{-1}\text{]}}{60} \times \text{Encoder resolution}^{*} \times 0.00025$$

∗ For details on encoder resolution, refer to *8.3.5 Electronic Gear*.

Example 1:

Assuming Pn20E = 4, Pn210 = 1, maximum motor speed = 6000 [min^{-1}], encoder resolution = 1048576 (20 bits):

1/4 × 6000/60 × 1048576 × 0.00025 = 6553.6 [reference units]
⇒The upper limit for the backlash compensation is 6553.6 [reference units].

Example 2:

When using the conditions Pn20E = 4, Pn210 = 1, maximum motor speed = 6000 [min^{-1}], external encoder pitch count (Pn20A) = 500, signal resolution: 1/256:

1/4 × 6000/60 × (500 × 256) × 0.00025 = 800.0 [reference units]
⇒ The upper limit for the backlash compensation is 800.0 [reference units].

- Do not exceed the upper limit of the backlash compensation value. The upper limit of the backlash compensation value can be confirmed in Un031.

- Backlash Compensation Time Constant

Set a time constant for a first order lag filter to use when adding the backlash compensation value (Pn231) to the position reference.
If you set Pn233 to 0, the first order lag filter is disabled.

Pn233	Backlash compensation time constant			Position	Classification
	Setting Range	Setting Unit	Factory Setting	When Enabled	
	0 to 65535	0.01 ms	0	Immediately	Setup

Note: Changes to the set value are applied when there is no position reference input and the servomotor is stopped. The current operation is not affected if the set value is changed during servomotor operation.

(3) Related Monitor

The following monitoring parameters provide information on backlash compensation.

Displayed Information	Unit
The current backlash compensation value	0.1 reference unit
Backlash compensation setting limit value	0.1 reference unit

(4) Compensation Operation

This section describes the operation that is performed for backlash compensation.

Note: The following figures are for when backlash compensation is applied for references in the forward direction (Pn230.0 = 0). The following monitoring information is provided in the figures: TPOS (target position in the reference coordinate system), POS (reference position in the reference coordinate system), and APOS (feedback position in the machine coordinate system). The monitoring information includes the feedback position in machine coordinate system (APOS) and other feedback information. The backlash compensation value is subtracted from the feed- back positions in the monitoring information, so it is not necessary for the PC or PLC...etc. to consider the backlash compensation value.

⚠ CAUTION

- The encoder output pulse will output the number of encoder pulses for which driving was actually per- formed, including the backlash compensation value. If using the encoder output pulse for position feed- back at the PC or PLC...etc., must consider the backlash compensation value.

- When Servo is ON

The backlash compensation value (Pn231) is added in the compensation direction when the servo is ON (i.e., the servomotor is powered) and a reference is input in the same direction as the backlash compensation direc- tion (Pn230.0). If there is a reference input in the direction opposite to the backlash compensation direction, the backlash compensation value is not added (i.e., backlash compensation is not performed).

The relationship between APOS and the servomotor shaft position is as follows:

If a reference is input in the compensation direction: APOS = Motor shaft position - Pn231
If a reference is input in the direction opposite to the compensation direction: APOS = Motor shaft position

The following figure shows driving the servomotor in the forward direction from target position TPOS0 to TPOS1 and then to TPOS2, and then returning from TPOS2 to TPOS1 and then to TPOS0.

Backlash compensation is applied when moving from TPOS0 to TPOS1, but not when moving from TPOS2 to TPOS1.

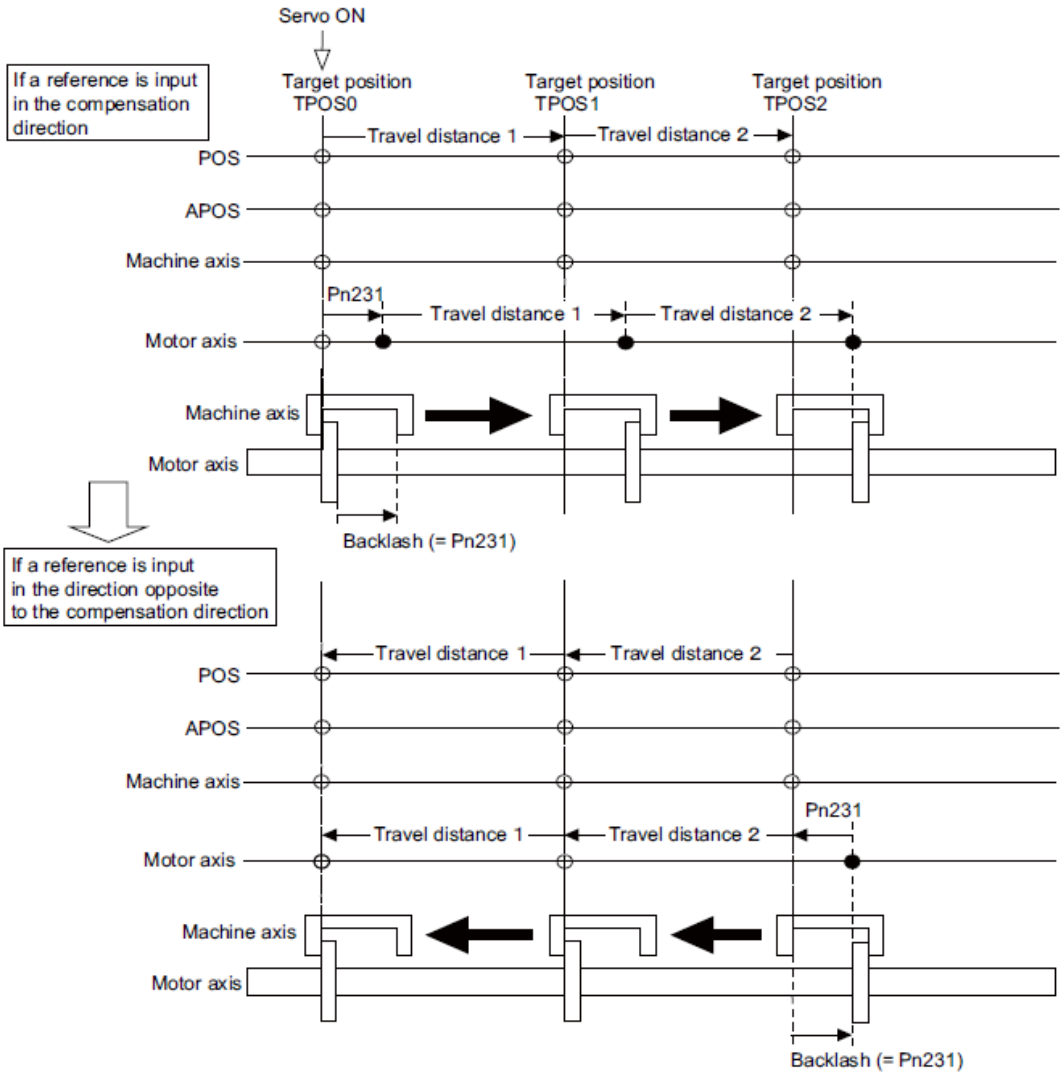

- When Servo is OFF

Backlash compensation is not applied when the servo is OFF (i.e., when the servomotor is not powered). Therefore, the reference position POS moves by only the backlash compensation value.

The relationship between APOS and the servomotor shaft position is as follows:

- When servo is OFF: APOS = Servomotor shaft position

The following figure shows what happens when the servo is turned OFF after driving the servomotor in the forward direction from target position TPOS0 to TPOS1. Backlash compensation is not applied when the servo is OFF (i.e., the DRIVER manages the position data so that APOS and POS are the same).

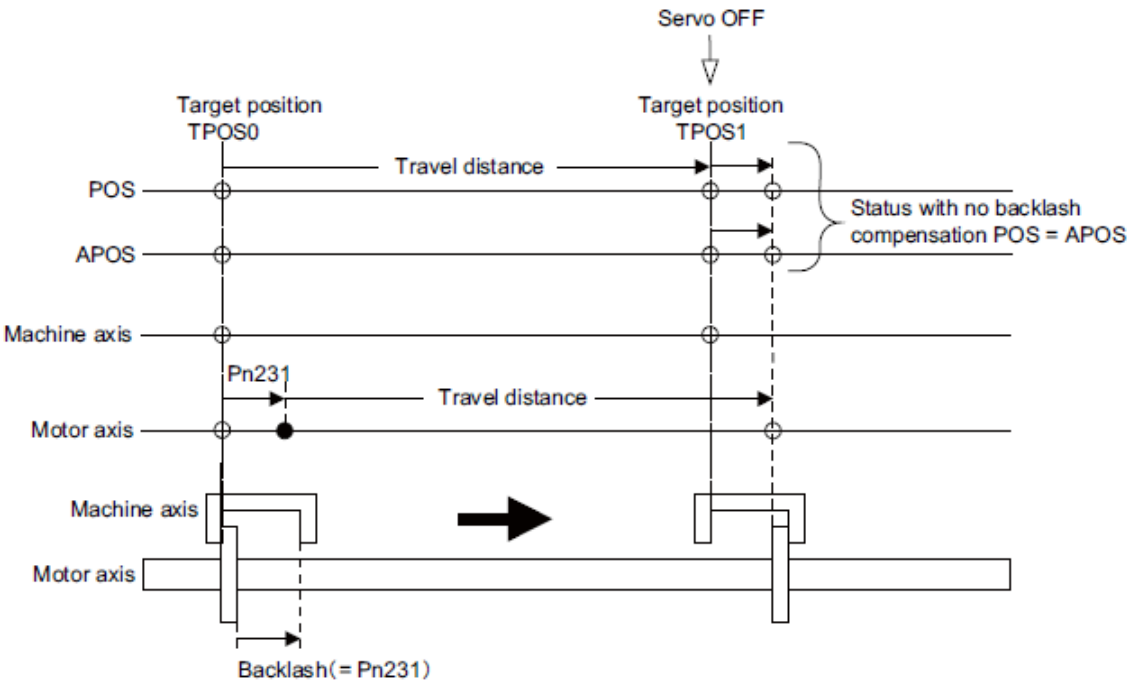

- When There is Overtravel

When there is overtravel (i.e., when driving is prohibited due to an overtravel signal or software limit), the operation is the same as for • *When Servo is OFF*, i.e., backlash compensation is not applied.

- When Control is Changed

Backlash compensation is performed only for position control.
Backlash compensation is not applied if changing from position control to any other type of control. Backlash compensation is applied in the same way as • *When Servo is ON* if changing from any other type of control to position control.

(5) Monitor Functions (Un Monitoring)

Displayed Information	Unit	Specification
Input reference speed	min^{-1}	Indicates the input reference speed before backlash compensation.
Position error amount	Reference unit	Displays the position error with respect to the position reference after backlash compensation.
Input reference counter	Reference unit	Displays the input reference counter before backlash compensation.
Feedback pulse counter	Encoder pulse	Displays the pulse count of the actually driven motor encoder.
Fully-closed feedback pulse counter	External encoder resolution	Displays the pulse count of the actually driven external encoder.
Feedback pulse counter	Reference unit	Displays the pulse count of the actually driven encoder in reference units.

(6) MECHATROLINK Monitor Information

This section describes the information that is set for the MECHATROLINK monitoring information (Monitor 1, Monitor 2, Monitor 3, and Monitor 4) and the backlash compensation operation.

Monitor Code	Designation	Meaning	Unit	Remarks
0	POS	Reference position in the reference coordinate system (after the position reference filter)	Reference unit	–
1	MPOS	Reference position	Reference unit	–
2	PERR	Position error	Reference unit	–
3	APOS	Feedback position in the machine coordinate system	Reference unit	Feedback position with the backlash compensation subtracted
4	LPOS	Feedback latch position in the machine coordinate system	Reference unit	Feedback position with the backlash compensation subtracted
5	IPOS	Reference position in the reference coordinate system (before the position reference filter)	Reference unit	–
6	TPOS	Target position in the reference coordinate system	Reference unit	–
E	OMN1	Option monitor 1 (selected with Pn824)	–	–
F	OMN2	Option monitor 2 (selected with Pn825)	–	–

Parameters		Monitor Information	Output Unit	Remarks
Pn824 Pn825	0003H	Position error (lower 32 bits)	Reference unit	–
	0004H	Position error (upper 32 bits)	Reference unit	–
	000AH	Encoder count (lower 32 bits)	Reference unit	Count value of the actually driven motor encoder
	000BH	Encoder count (upper 32 bits)	Reference unit	
	000CH	FPG count (lower 32 bits)	Reference unit	Count value of the actually driven external encoder
	000DH	FPG count (upper 32 bits)	Reference unit	
	0017H	Input reference speed	min^{-1}	Same as monitor display Un007
	0018H	Position error amount	Reference unit	Same as monitor display Un008
	001CH	Input reference counter	Reference unit	Same as monitor display Un00C
	001DH	Feedback pulse counter	Encoder pulse	Same as monitor display Un00D
	001EH	Fully-closed feedback pulse counter	External encoder resolution	Same as monitor display Un00E
	0080H	Previous value of latched feedback position (LPOS)	Encoder pulse	Feedback position with the backlash compensation subtracted

- Related Monitoring Diagrams

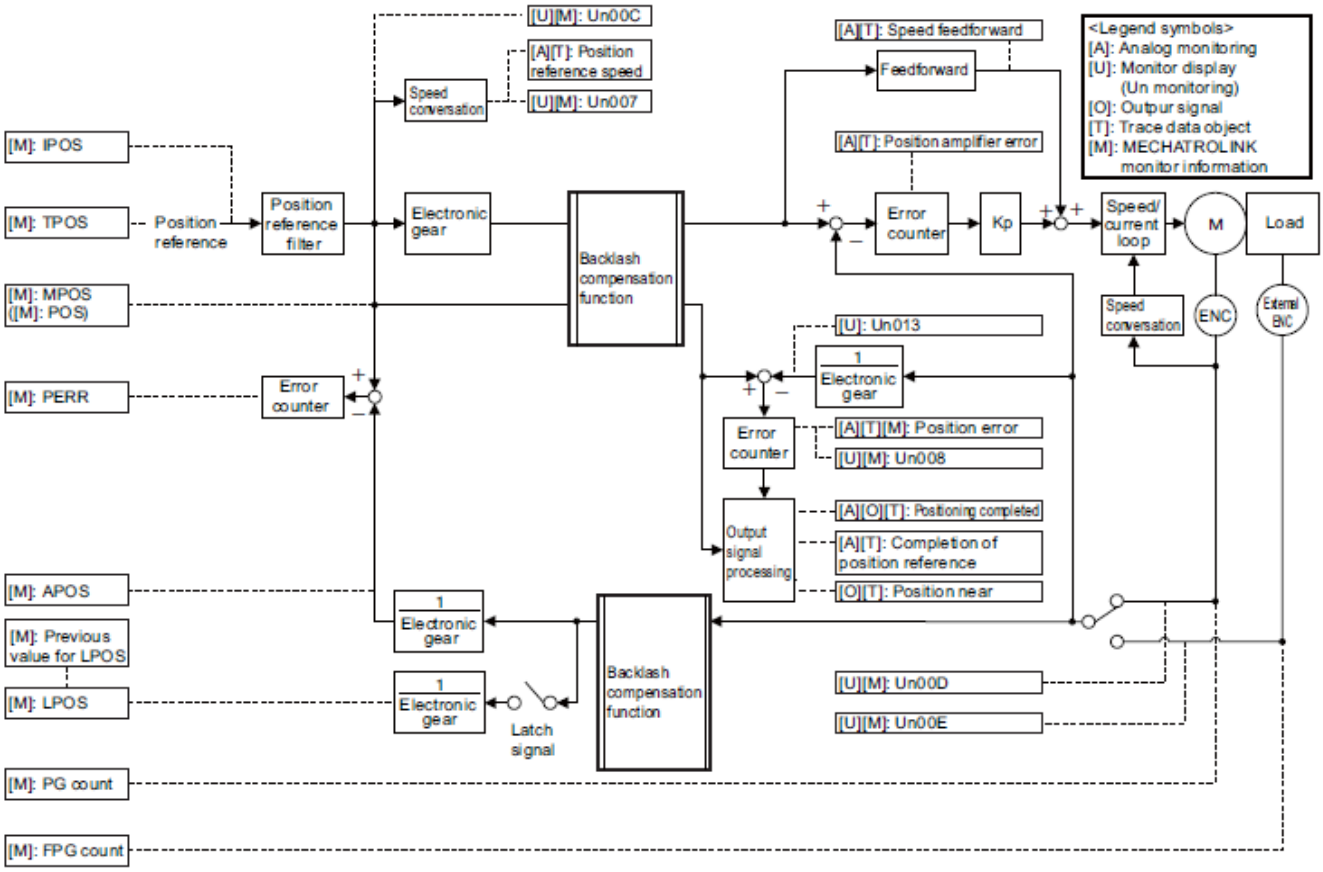

5.8.7 Torque Reference Filter

As shown in the following diagram, the torque reference filter contains first order lag filter and notch filters arrayed in series, and each filter operates independently. The notch filters can be enabled and disabled with the Pn408.

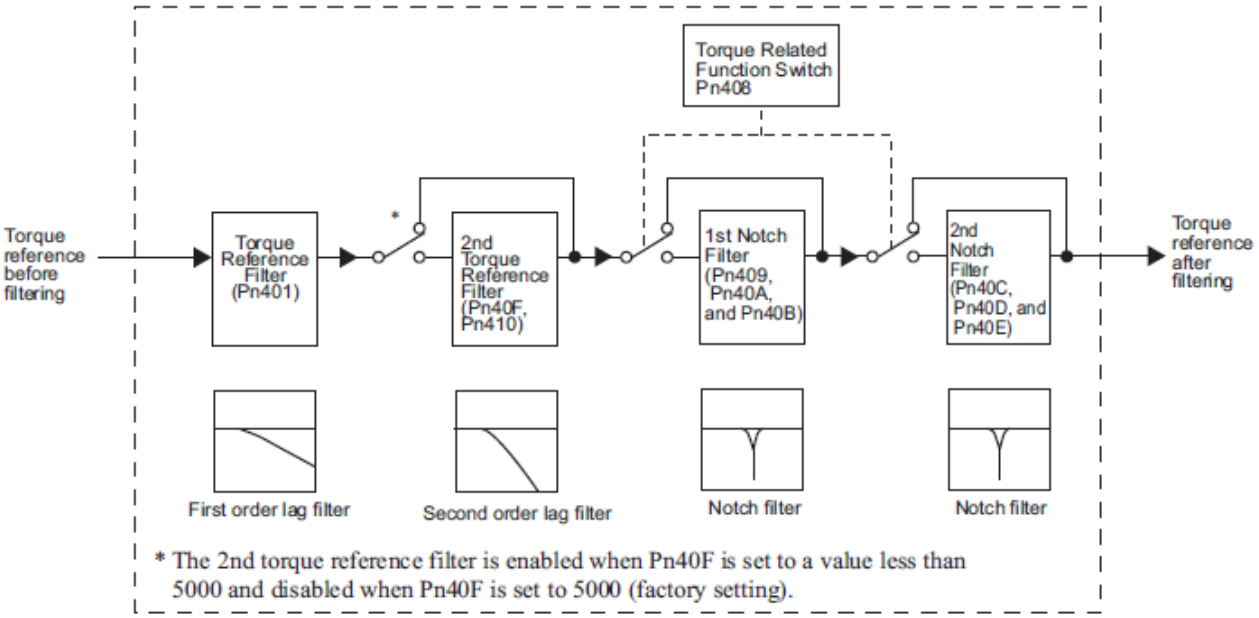

(1)Torque Reference Filter

If you suspect that machine vibration is being caused by the servo drive, try adjusting the filter time constants with Pn401. This may stop the vibration. The lower the value, the better the response will be, but there may be a limit that depends on the machine conditions.

Pn401	Torque Reference Filter Time Constant Speed Position Torque				Classification
	Setting Range	Setting Unit	Factory Setting	When Enabled	
	0 to 65535	0.01 ms	100	Immediately	Tuning

o

- Trque Reference Filter Setting Guide

Use the speed loop gain (Pn100 [Hz]) and the torque filter time constant (Pn401 [ms]) to set the torque refer- ence filter.

Adjusted value for stable control: Pn401 [ms] ≤ 1000/ (2π × Pn100 [Hz] × 4) Critical gains: Pn401 [ms] < 1000/ (2π × Pn100 [Hz] × 1)

Pn40F	2nd Step 2nd Torque Reference Filter Frequency Speed Position Torque				Classification
	Setting Range	Setting Unit	Factory Setting	When Enabled	
	100 to 5000	1 Hz	5000*	Immediately	Tuning
Pn410	2nd Step 2nd Torque Reference Filter Q Value Speed Position Torque				Classification
	Setting Range	Setting Unit	Factory Setting	When Enabled	
	50 to 100	0.01	50	Immediately	Tuning

∗ The filter is disabled if 5000 is set.

6. Utility Functions (Fn□□□)

6.1 List of Utility Functions

Utility functions are used to execute the functions related to servomotor operation and adjustment.
The following table lists the utility functions and reference section.

Function No.	Function	Reference Section
Fn000	Alarm history display	6.2
Fn002	JOG operation	6.3
Fn003	Origin search	6.4
Fn004	Program JOG operation	6.5
Fn005	Initializing parameter settings	6.6
Fn006	Clearing alarm history	6.7
Fn008	Absolute encoder multiturn reset and encoder alarm reset	4.7.4
Fn00C	Offset adjustment of analog monitor output	6.8
Fn00D	Gain adjustment of analog monitor output	6.9
Fn00E	Automatic offset-signal adjustment of the motor current detection signal	6.10
Fn00F	Manual offset-signal adjustment of the motor current detection signal	6.11
Fn010	Write prohibited setting	6.12
Fn011	Product Information display	6.13
Fn013	Multiturn limit value setting change when a multiturn limit disagreement alarm occurs	4.7.6
Fn014	Resetting configuration error in option modules	6.14
Fn01B	Vibration detection level initialization	6.15
Fn020	Origin setting	6.16
Fn030	Software reset	6.17
Fn200	Tuning-less levels setting	5.2.2
Fn201	Advanced autotuning	5.3.2
Fn202	Advanced autotuning by reference	5.4.2
Fn203	One-parameter tuning	5.5.2
Fn204	Anti-resonance control adjustment function	5.6.2
Fn205	Vibration suppression function	5.7.2
Fn206	EasyFFT	6.18
Fn207	Online vibration monitor	6.19

Note: Execute the utility function with SigmaWin+.

6.2 Alarm History Display (Fn000)

This function displays the last ten alarms that have occurred in the DRIVER. The latest ten alarm numbers and time stamps* can be checked.

∗ Time Stamps
A function that measures the ON times of the control power supply and main circuit power supply in 100-ms units and displays the total operating time when an alarm occurs. The time stamp operates around the clock for approximately 13 years.

<Example of Time Stamps>
If 36000 is displayed,
3600000 [ms] = 3600 [s] = 60 [min] = 1 [h]
Therefore, the total number of operating hours is 1 hour.

(1) Preparation

There are no tasks that must be performed before displaying the alarm history.

(2) Operating Procedure

In the SigmaWin+ Σ-V component main window, click **Alarm** and then click **Display Alarm**.
Click Alarm Traceback tab page, and are shown in order of occurrence with alarm codes and details about the type of alarm, such as name.

For more information on the usage of the SigmaWin+, refer to AC Servo Drives Engineering Tool Sigma Win+ ONLINE MANUAL Σ-V Component *4.2 Alarm Display*.

Note:
- If the same alarm occurs after more than one hour, the alarm will be saved. If it occurs in less than one hour, it will not be saved.
- Click **Clear** to delete or clear the alarm history. The alarm history is not cleared on alarm reset or when the DRIVER main circuit power is turned OFF.

6.3 JOG Operation (Fn002)

JOG operation is used to check the operation of the servomotor under speed control without connecting the DRIVER to the host controller.

⚠ CAUTION

While the DRIVER is in JOG operation, the overtravel function will be disabled. Consider the operating range of the machine when performing JOG operation for the DRIVER.

(1) Preparation

The following conditions must be met to perform a jog operation.

The write prohibited setting parameter (Fn010) must be set to Write permitted (P.0000).
The main circuit power supply must be ON.
All alarms must be cleared.
The hardwire baseblock (HWBB) must be disabled.
The servomotor power must be OFF.
The JOG speed must be set considering the operating range of the machine. Set the jog speed in Pn304.

Pn304	Jog Speed			Speed Position Torque	Classification
	Setting Range	Setting Unit	Factory Setting	When Enabled	
	0 to 10000	1 min^{-1}*	500	Immediately	Setup

(2) Operating Procedure

Use the following procedure. The following example is given when the rotating direction of servomotor is set as Pn000.0=0 (Forward rotation by forward reference).

1. In the SigmaWin+ Σ-V component main window, click **Test Run**, and then click **Jog**.
2. Set up the JOG speed. To change the JOG speed, click **Edit**.
3. Click **Servo ON**.
4. Press **Forward** or **Reverse**. A JOG operation is performed only while one of these buttons is pressed.

For more information on the usage of the SigmaWin+, refer to AC Servo Drives Engineering Tool Sigma Win+ ONLINE MANUAL Σ-V Component *4.7.1 JOG Operation*.

6.4 Origin Search (Fn003)

The origin search is designed to position the origin pulse position of the incremental encoder (phase C) and to clamp at the position.

⚠ CAUTION

Perform origin searches without connecting the coupling.
The forward run prohibited (P-OT) and reverse run prohibited (N-OT) signals are not effective in origin search mode.

This function is used when the motor shaft needs to be aligned to the machine.
Motor speed at the time of execution: 60 min^{-1}
(For SGMCS direct drive motors, the speed at the time of execution is 6 min^{-1}.)

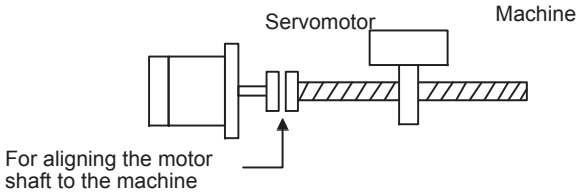

(1) Preparation

The following conditions must be met to perform the origin search.

The write prohibited setting parameter (Fn010) must be set to Write permitted (P.0000).
The main circuit power supply must be ON.
All alarms must be cleared.
The hardwire baseblock (HWBB) must be disabled.
The servomotor power must be OFF.

(2) Operating Procedure

Use the following procedure.

1. In the SigmaWin+ Σ-V component main window, click **Setup**, and then click **Search Origin**.
2. Click Servo ON.
3. Press **Forward** or **Reverse**. The search is performed while one of these buttons is pressed. The axis stops when the search is complete.

For more information on the usage of the SigmaWin+, refer to AC Servo Drives Engineering Tool Sigma Win+ ONLINE MANUAL Σ-V Component *4.4.4 Origin Search*.

6.5 Program JOG Operation (Fn004)

The program JOG operation is a utility function, that allows continuous operation determined by the preset operation pattern, movement distance, movement speed, acceleration/deceleration time, waiting time, and number of times of movement.
This function can be used to move the servomotor without it having to be connected to a host controller for the machine as a trial operation in JOG operation mode. Program JOG operation can be used to confirm the operation and for simple positioning operations.

(1) Preparation

The following conditions must be met to perform the program JOG operation.

The write prohibited setting parameter (Fn010) must be set to Write permitted (P.0000).
The main circuit power supply must be ON.
All alarms must be cleared.
The hardwire baseblock (HWBB) must be disabled.
The servomotor power must be OFF.
The travel distance and speed must be set correctly considering the machine operation range and safe operation speed.
There must be no overtravel.

(2) Additional Information

The functions that are applicable for position control, such as position reference filter, can be used.
The overtravel function is enabled in this function.

(3) Program JOG Operation Patterns

The following describes an example of program JOG operation pattern. The following example is given when the rotating direction of the servomotor is set as Pn000.0 = 0 (Forward rotation by forward reference).

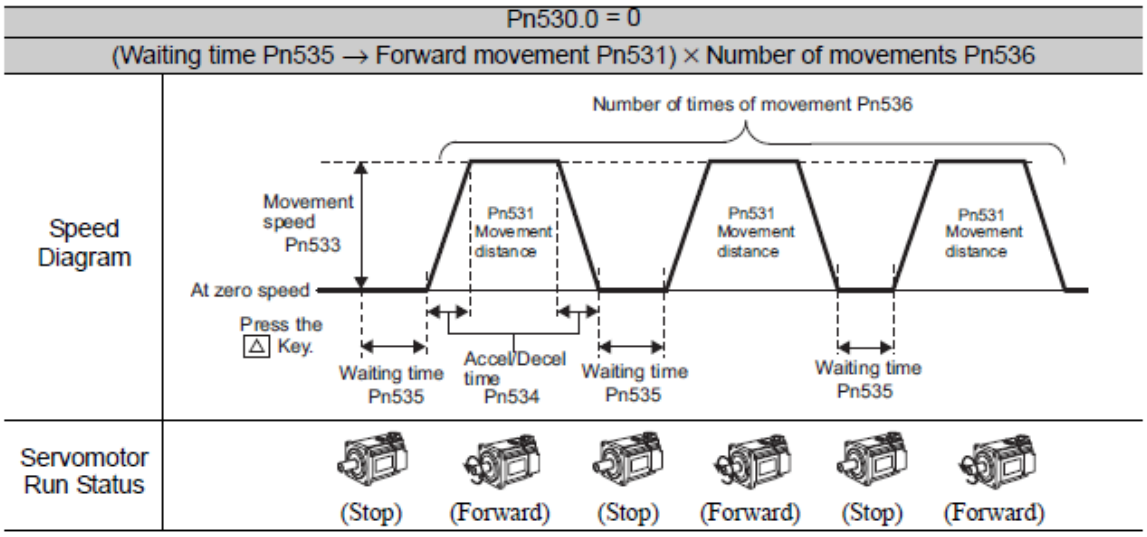

Note: When Pn536 (number of times of program JOG movement) is set to 0, infinite time operation is enabled.

Pn530.0 = 1	
(Waiting time Pn535 → Reverse movement Pn531) × Number of movements Pn536	
Speed Diagram	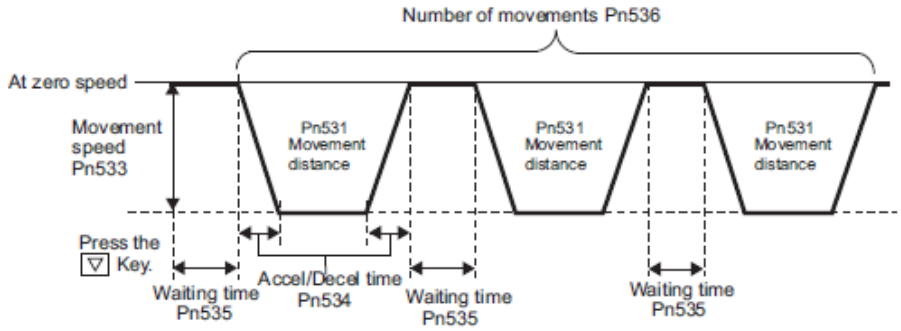
Servomotor Run Status	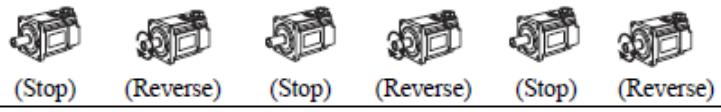

Note: When Pn536 (Number of Times of Program JOG Movement) is set to 0, infinite time operation is enabled.

Pn530.0 = 2	
(Waiting time Pn535 → Forward movement Pn531) × Number of movements Pn536 (Waiting time Pn535 → Reverse movement Pn531) × Number of movements Pn536	
Speed Diagram	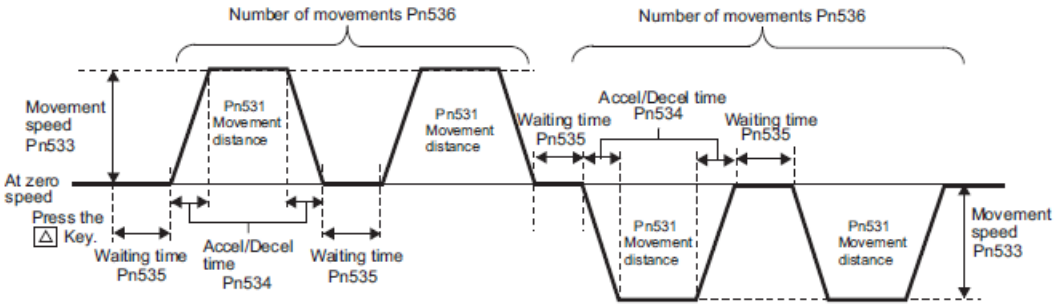
Servomotor Run Status	

Note: When Pn530.0 is set to 2, infinite time operation is disabled.

Pn530.0 = 3	
(Waiting time Pn535 → Reverse movement Pn531) × Number of movements Pn536 (Waiting time Pn535 → Forward movement Pn531) × Number of movements Pn536	
Speed Diagram	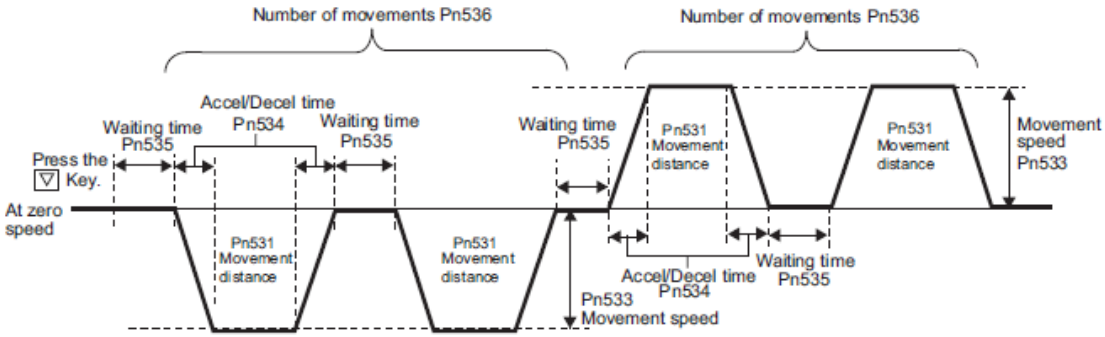
Servomotor Run Status	

Note: When Pn530.0 is set to 3, infinite time operation is disabled.

Pn530.0 = 4	
(Waiting time Pn535 → Forward movement Pn531 → Waiting time Pn535 → Reserve movement Pn531) × Number of movements Pn536	
Speed Diagram	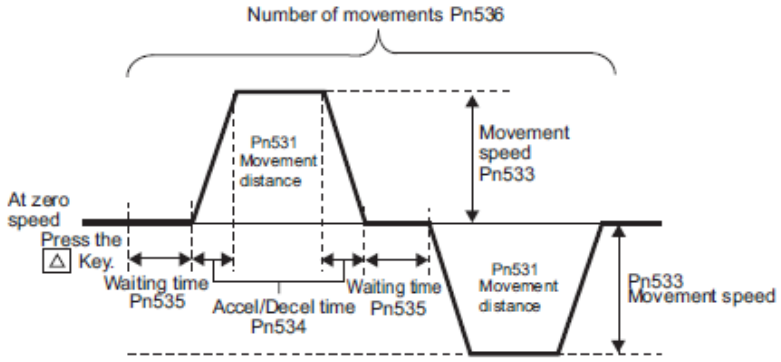
Servomotor Run Status	

Note: When Pn536 (number of times of program JOG movement) is set to 0, infinite time operation is enabled.

Pn530.0 = 5	
(Waiting time Pn535 → Reverse movement Pn531 → Waiting time Pn535 → Forward movement Pn531) × Number of movements Pn536	
Speed Diagram	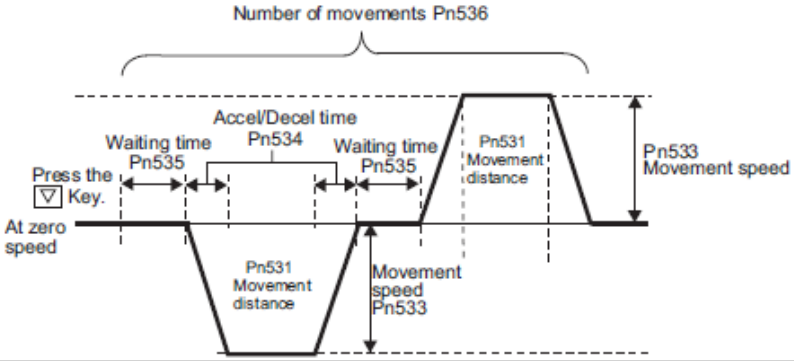
Servomotor Run Status	

Note: When Pn536 (number of times of program JOG movement) is set to 0, infinite time operation is enabled.

(4) Related Parameters

The following parameters set the program JOG operation pattern. Operation pattern can change setting at Running Condition Setting box of program JOG operation.
Do not change the settings while the program JOG operation is being executed.

Pn530	Program JOG Operation Related Switch		Speed Position Torque		Classification
	Setting Range	Setting Unit	Factory Setting	When Enabled	
	0000 to 0005	–	0000	Immediately	Setup
Pn531	Program JOG Movement Distance		Speed Position Torque		Classification
	Setting Range	Setting Unit	Factory Setting	When Enabled	
	1 to 1073741824	1 reference unit	32768	Immediately	Setup
Pn533	Program JOG Movement Speed		Speed Position Torque		Classification
	Setting Range	Setting Unit	Factory Setting	When Enabled	
	1 to 10000	1 min^{-1}*	500	Immediately	Setup
Pn534	Program JOG Acceleration/Deceleration Time		Speed Position Torque		Classification
	Setting Range	Setting Unit	Factory Setting	When Enabled	
	2 to 10000	1 ms	100	Immediately	Setup
Pn535	Program JOG Waiting Time		Speed Position Torque		Classification
	Setting Range	Setting Unit	Factory Setting	When Enabled	
	0 to 10000	1 ms	100	Immediately	Setup
Pn536	Number of Times of Program JOG Movement		Speed Position Torque		Classification
	Setting Range	Setting Unit	Factory Setting	When Enabled	
	0 to 1000	1 time	1	Immediately	Setup

(5) Operating Procedure

Use the following procedure.

1. In the SigmaWin+ Σ-V component main window, click **Test Run** and then click **Program JOG Operation**.
2. Set the running conditions and click **Apply**. The graph for the operation pattern is displayed.
3. Click **Run** and the Program JOG Operation box appears.
4. Click **Servo ON** and **Execute**. The program JOG operation starts.

For more information on the usage of the SigmaWin+, refer to AC Servo Drives Engineering Tool Sigma Win+ ONLINE MANUAL Σ-V Component *4.7.2 Program JOG Operation.*

6.6 Initializing Parameter Settings (Fn005)

This function is used when returning to the factory settings after changing parameter settings.

IMPORTANT	Be sure to initialize the parameter settings while the servomotor power is OFF. After initialization, turn OFF the power supply and then turn ON again to validate the settings.

Note: Any value adjusted with Fn00C, Fn00D, Fn00E, and Fn00F cannot be initialized by Fn005.

(1) Preparation

The following conditions must be met to initialize the parameter values.

The write prohibited setting parameter (Fn010) must be set to Write permitted (P.0000).
The servomotor power must be OFF.

(2) Operating Procedure

Use the following procedure.

1. In the SigmaWin+ Σ-V component main window, click **Parameters** and then click **Edit Parameters**.
   The Parameter Editing window for the online mode appears.
2. Click Initialize.
3. To enable the change in the setting, turn the power OFF and ON again.

For more information on the usage of the SigmaWin+, refer to AC Servo Drives Engineering Tool Sigma Win+ ONLINE MANUAL Σ-V Component *4.1.1 Editing Parameter.*

6.7 Clearing Alarm History (Fn006)

The clear alarm history function deletes all of the alarm history recorded in the DRIVER.

Note: The alarm history is not deleted when the alarm reset is executed or the main circuit power supply of the DRIVER is turned OFF.

(1) Preparation

The follow conditions must be met to clear the alarm history.
The write prohibited setting parameter (Fn010) must be set to Write permitted (P.0000).

(2) Operating Procedure

Use the following procedure.

1. In the SigmaWin+ Σ-V component main window, click **Alarm** and then click **Display Alarm**.
2. To clear an alarm, click **Reset** after removing the cause of the alarm.

For more information on the usage of the SigmaWin+, refer to AC Servo Drives Engineering Tool Sigma Win+ ONLINE MANUAL Σ-V Component *4.2 Alarm Display*.

6.8 Offset Adjustment of Analog Monitor Output (Fn00C)

This function is used to manually adjust the offsets for the analog monitor outputs (torque reference monitor output and motor speed monitor output). The offset values are factory-set before shipping. Therefore, the user need not usually use this function.

(1) Adjustment Example

An example of offset adjustment to the motor speed monitor is shown below.

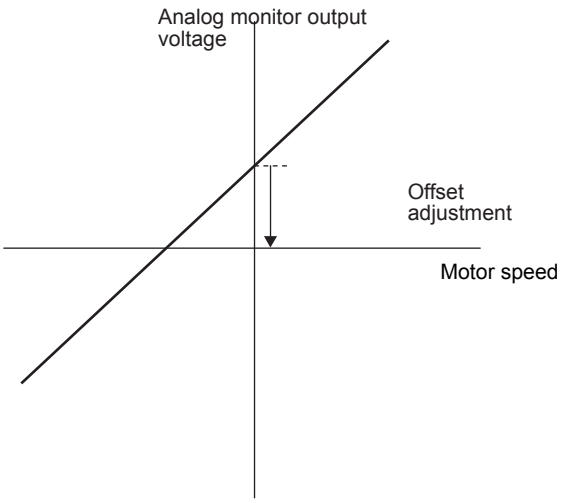

Item	Specifications
Offset Adjustment Range	-2.4 V to + 2.4 V
Adjustment Unit	18.9 mV/LSB

Note:
-The adjustment value will not be initialized when parameter settings are initialized using Fn005.
-Make offset adjustment with a measuring instrument connected, so that the analog monitor output is zero.
An example of settings for a zero analog monitor output is shown below.

- While the servomotor is not turned ON, set the monitor signal to the torque reference.
- In speed control, set the monitor signal to the position error.

(2) Preparation

The following condition must be met to adjust the offsets of the analog monitor output.
-The write prohibited setting parameter (Fn010) must be set to Write permitted (P.0000).

(3) Operating Procedure

Use the following procedure to perform the offset adjustment of analog monitor output.

1. In the SigmaWin+ Σ-V component main window, click Setup, point to Adjust Offset and click **Adjust the Analog Monitor Output**.
2. Click the Zero Adjustment tab.
3. While watching the analog monitor, use the **+1** and **-1** buttons to adjust the offset.

For more information on the usage of the SigmaWin+, refer to AC Servo Drives Engineering Tool Sigma Win+ ONLINE MANUAL Σ-V Component *4.4.3 Offset Adjustment.*

6.9 Gain Adjustment of Analog Monitor Output (Fn00D)

This function is used to manually adjust the gains for the analog monitor outputs (torque reference monitor output and motor rotating speed monitor output). The gain values are factory-set before shipping. Therefore, the user need not usually use this function.

(1) Adjustment Example

An example of gain adjustment to the motor rotating speed monitor is shown below.

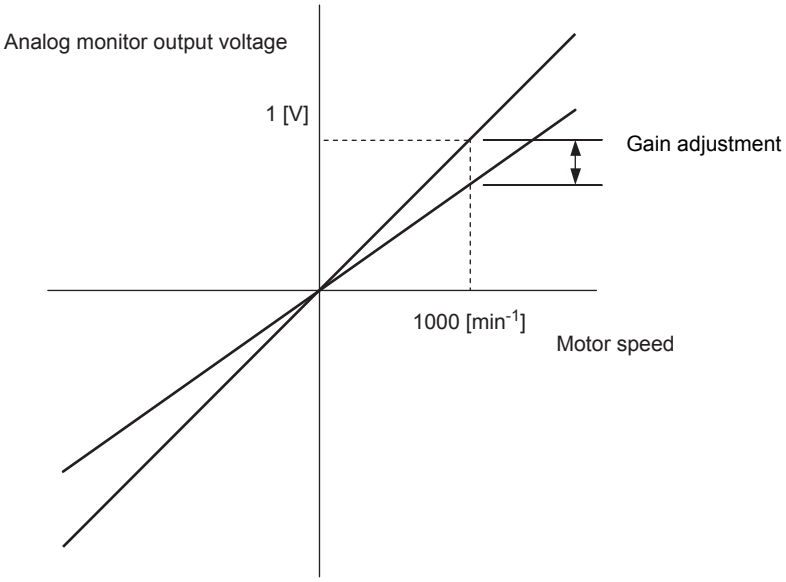

Item	Specifications
Gain-adjustment Range	100±50%
Adjustment Unit	0.4%/LSB

The gain adjustment range is made with a 100% output set as a center value (adjustment range: 50% to 150%). The following is a setting example.

<Setting the Set Value to −125>
100% + (−125 × 0.4) = 50%
Therefore, the monitor output voltage is 0.5 time as high.

<Setting the Set Value to 125>
100% + (125 × 0.4) =150%
Therefore, the monitor output voltage is 1.5 times as high.

Note: The adjustment value will not be initialized when parameter settings are initialized using Fn005.

(2) Preparation

The following condition must be met to adjust the gain of the analog monitor output.

- The write prohibited setting parameter (Fn010) must be set to Write permitted (P.0000).

(3) Operating Procedure

Use the following procedure to perform the gain adjustment of analog monitor output.

1. In the SigmaWin+ Σ-V component main window, click **Setup**, point to **Adjust Offset** and click **Adjust the Analog Monitor Output**.
2. Click the **Gain Adjustment** tab.
3. While watching the analog monitor, use the **+1** and **-1** buttons to adjust the gain.

For more information on the usage of the SigmaWin+, refer to AC Servo Drives Engineering Tool Sigma Win+ ONLINE MANUAL Σ-V Component *4.4.3 Offset Adjustment.*

6.10 Automatic Offset-Signal Adjustment of the Motor Current Detection Signal (Fn00E)

Perform this adjustment only if highly accurate adjustment is required for reducing torque ripple caused by current offset. The user need not usually use this function.

IMPORTANT

- Be sure to perform this function while the servomotor power is OFF.
- Execute the automatic offset adjustment if the torque ripple is too big when compared with those of other DRIVERs.

Note: The adjusted value is not initialized by executing the Fn005 function (Initializing Parameter Settings).

(1) Preparation

The following conditions must be met to automatically adjust the offset of the motor current detection signal.
- The write prohibited setting parameter (Fn010) must be set to Write permitted (P.0000).
- The DRIVER must be in Servo Ready status (Refer to *4.8.4*).
- The servomotor power must be OFF.

(2) Operating Procedure

Use the following procedure.

1. In the SigmaWin+ Σ-V component main window, click **Setup**, point to **Adjust Offset** and click **Adjust the Motor Current Detection Offset**.
2. Click **Continue**, and then click the **Automatic Adjustment tab**.
3. Click **Adjust**. The automatically adjusted values are displayed in the **New** box.

For more information on the usage of the SigmaWin+, refer to AC Servo Drives Engineering Tool Sigma Win+ ONLINE MANUAL Σ-V Component *4.4.3 Offset Adjustment.*

6.11 Manual Offset-Signal Adjustment of the Motor Current Detection Signal (Fn00F)

Use this function only if the torque ripple is still high after the automatic offset-signal adjustment of the motor current detection signal (Fn00E).

IMPORTANT

If this function is adjusted incorrectly and then executed, characteristics of the servomotor performance could be affected.

Observe the following precautions when performing manual servo tuning.

- Run the servomotor at a speed of approximately 100 min^{-1}.
- Adjust the offset while monitoring the torque reference with the analog monitor until the ripple of torque reference monitor's waveform is minimized.
- Adjust the phase-U and phase-V offset amounts alternately several times until these offsets are well balanced.

Note: The adjusted value is not initialized by executing the Fn005 function (Initializing Parameter Settings).

(1) Preparation

The following condition must be met to manually adjust the offset of the motor current detection signal.
- The write prohibited setting parameter (Fn010) must be set to Write permitted (P.0000).

(2) Operating Procedure

Use the following procedure.

1. Turn the motor at 100 min-1.
2. In the SigmaWin+ Σ-V component main window, click **Setup**, point to **Adjust Offset** and click **Adjust the Motor Current Detection Offset**.
3. Click **Continue**, and then click the **Manual Adjustment** tab.
4. While watching the analog monitor, use the +1 and -1 buttons to adjust the offset to minimize the ripple on the torque reference monitor. The U-phase and V-phase currents must be adjusted so that they balance. Repeat the adjustment alternately between them several times.

Repeat the operations of steps 4 to 6 (phase-U and-V alternately) until adjusting the offset amounts both for phase-U and -V in both directions cannot reduce the torque ripple any more.
Then, perform the same operation by adjusting by smaller amount.

For more information on the usage of the SigmaWin+, refer to AC Servo Drives Engineering Tool Sigma Win+ ONLINE MANUAL Σ-V Component *4.4.3 Offset Adjustment.*

6.12 Write Prohibited Setting (Fn010)

This function prevents changing parameters by mistake and sets restrictions on the execution of the utility function.

Parameter changes and execution of the utility function become restricted in the following manner when Write prohibited (P.0001) is assigned to the write prohibited setting parameter (Fn010).
- Parameters: Cannot be changed. If you attempt to change it, "NO-OP" will flash on the display and the screen will return to the main menu.
- Utility Function: Some functions cannot be executed. (Refer to the following table.) If you attempt to exe- cute these utility functions, "NO-OP" will flash on the display and the screen will return to the main menu.

Parameter No.	Function	Write Prohibited Setting	Reference Section
Fn000	Alarm history display	Executable	6.2
Fn002	JOG operation	Cannot be executed	6.3
Fn003	Origin search	Cannot be executed	6.4
Fn004	Program JOG operation	Cannot be executed	6.5
Fn005	Initializing parameter settings	Cannot be executed	6.6
Fn006	Clearing alarm history	Cannot be executed	6.7
Fn008	Absolute encoder multiturn reset and encoder alarm reset	Cannot be executed	4.7.4
Fn00C	Offset adjustment of analog monitor output	Cannot be executed	6.8
Fn00D	Gain adjustment of analog monitor output	Cannot be executed	6.9
Fn00E	Automatic offset-signal adjustment of the motor current detection signal	Cannot be executed	6.10
Fn00F	Manual offset-signal adjustment of the motor current detection signal	Cannot be executed	6.11
Fn010	Write prohibited setting	–	6.12
Fn011	Product Information display	Executable	6.13
Fn013	Multiturn limit value setting change when a multiturn limit dis-agreement alarm occurs	Cannot be executed	4.7.6
Fn014	Resetting configuration error in option modules	Cannot be executed	6.14
Fn01B	Vibration detection level initialization	Cannot be executed	6.15
Fn020	Origin setting	Cannot be executed	6.16
Fn030	Software reset	Executable	6.17
Fn200	Tuning-less levels setting	Cannot be executed	5.2.2
Fn201	Advanced autotuning	Cannot be executed	5.3.2
Fn202	Advanced autotuning by reference	Cannot be executed	5.4.2
Fn203	One-parameter tuning	Cannot be executed	5.5.2
Fn204	Anti-resonance control adjustment function	Cannot be executed	5.6.2
Fn205	Vibration suppression function	Cannot be executed	5.7.2
Fn206	EasyFFT	Cannot be executed	6.18
Fn207	Online vibration monitor	Cannot be executed	6.19

(2) Operating Procedure

Follow the steps to set enable or disable writing. Setting values are as follows:
- "P.0000": Write permitted (Releases write prohibited mode.) [Factory setting]
- "P.0001": Write prohibited (Parameters become write prohibited from the next power ON.)

1. In the SigmaWin+ Σ-V component main window, click **Setup**, and then click **Write Prohibited Setting.**

<If the Write Prohibited Setting is ON>
2. Click the ▼ button to change the value to "0000" and click **Setting**. The write prohibited setting is off.

<If the Write Prohibited Setting is OFF**>**
2. Click the ▲ button to change the value to "0001" and click Setting. The write prohibited setting is on.

3. Click **OK** and restart the SERVOPACK.

For more information on the usage of the SigmaWin+, refer to AC Servo Drives Engineering Tool Sigma Win+ ONLINE MANUAL Σ-V Component *4.4.5 Write Prohibited Setting.*

6.13 Product Information Display (Fn011)

This function is used to check the servomotor model, voltage, capacity, encoder type, encoder resolution, software version, and ID. If the DRIVER has been custom-made, you can also check the specification codes of DRIVERs.

(1) Preparation

There are no tasks that must be performed before the execution.

(2) Operating Procedure

In the SigmaWin+ Σ-V component main window, click **Monitor** and then click **Product Information**.
Information about the DRIVER, the motor, and the option modules will be displayed.

For more information on the usage of the SigmaWin+, refer to AC Servo Drives Engineering Tool Sigma Win+ ONLINE MANUAL Σ-V Component *4.3.1 Product Information.*

6.14 Resetting Configuration Errors in Option Modules (Fn014)

The DRIVER with option module recognizes installation status and types of option modules that are connected to DRIVER. If an error is detected, the DRIVER issues an alarm. This function clears these alarms.

Note 1. Alarms related to option module can be cleared only by this function. These alarms cannot be cleared by alarm reset or turning OFF the main circuit power supply.
2. Before clearing the alarm, perform corrective action for the alarm.

(1) Preparation

The following condition must be met to clear detection alarms of the option module.
-The write prohibited setting parameter (Fn010) must be set to Write permitted (P.0000).

(2) Operating Procedure

Use the following procedure.

1. In the SigmaWin+ Σ-V component main window, click Setup and then Reset **Configuration Error of Option Card**.
2. Check to see if the **Clear** check box of the option module whose detection result to be cleared is selected, and then click **Execute**.
3. To enable the change in the setting, turn the power OFF and ON again.

IMPORTANT

The detection result **Error detected** cannot be cleared. Remove the option module, or check to see if the option module is correctly mounted.

For more information on the usage of the SigmaWin+, refer to AC Servo Drives Engineering Tool Sigma Win+ ONLINE MANUAL Σ-V Component *4.4.9 Resetting the Configuration Error of Option Module.*

6.15 Vibration Detection Level Initialization (Fn01B)

This function detects vibration when servomotor is connected to a machine in operation and automatically adjusts the vibration detection level (Pn312) to output more exactly the vibration alarm (A.520) and the vibration warning (A.911).

The vibration detection function detects vibration elements according to the motor speed.

Parameter		Meaning	When Enabled	Classification
Pn310	n.□□□0 [Factory setting]	Does not detect vibration.	Immediately	Setup
	n.□□□1	Outputs the warning (A.911) when vibration is detected.		
	n.□□□2	Outputs the alarm (A.520) when vibration is detected.		

If the vibration exceeds the detection level calculated by the following formula, the alarm or warning will be output according to the setting of vibration detection switch (Pn310).

$$\text{Detection level} = \frac{\text{Vibration detection level (Pn312 [min}^{-1}\text{])} \times \text{Vibration detection sensitivity (Pn311 [\%])}}{100}$$

Use this function if the vibration alarm (A.520) or the vibration warning (A.911) is not output correctly when a vibration at the factory setting of the vibration detection level (Pn312) is detected. In other cases, it is not necessary to use this function.
The vibration alarm or warning detection sensibility differs depending on the machine conditions. In this case, fine-tune the setting of the vibration detection sensitivity (Pn311) using the above detection level formula as a guide.

Pn311	Vibration Detection Sensitivity		Speed Position Torque		Classification
	Setting Range	Setting Unit	Factory Setting	When Enabled	
	50 to 500	1%	100	Immediately	Tuning

IMPORTANT

- The vibration may not be detected because of improper servo gains. Also, not all kinds of vibrations can be detected. Use the detection result as a guideline.
- Set a proper moment of inertia ratio (Pn103). Improper setting may result in the vibration alarm, warning misdetection, or non-detection.
- The references that are used to operate your system must be input to execute this function.
- Execute this function under the operating condition for which the vibration detection level should be set.
- Execute this function while the motor speed reaches at least 10% of its maximum.

(1) Preparation

The following conditions must be met to initialize the vibration detection level.
- The write prohibited setting parameter (Fn010) must be set to Write permitted (P.0000).
- The test without a motor function must be disabled (Pn00C.0 = 0).

(2) Operating Procedure

Use the following procedure.

1. In the SigmaWin+ Σ-V component main window, click **Setup**, and then click **Initialize Vibration Detection Level**.
2. Select a percentage as the degree of vibration detection sensitivity and the vibration detection switch, and then click **Detection Start**.
3. Click **Execute**. The level at which the vibrations are detected is automatically adjusted, and the setting is displayed in the box on the right and saved in the DRIVER.

For more information on the usage of the SigmaWin+, refer to AC Servo Drives Engineering Tool Sigma Win+ ONLINE MANUAL Σ-V Component *4.4.7 Initializing Vibration Detection Level.*

(3) Related Parameters

The following table lists parameters related to this function and their possibility of being changed while executing this function or of being changed automatically after executing this function.

- Parameters related to this function
  These are parameters that are used or referenced when executing this function.

- Allowed changes during execution of this function
  Yes : Parameters can be changed using SigmaWin+ while this function is being executed.
  No : Parameters cannot be changed using SigmaWin+ while this function is being executed.

- Automatic changes after execution of this function
  Yes : Parameter set values are automatically set or adjusted after execution of this function.
  No : Parameter set values are not automatically set or adjusted after execution of this function.

Parameter	Name	Mid-execution changes	Automatic changes
Pn311	Vibration Detection Sensitivity	Yes	No
Pn312	Vibration Detection Level	No	Yes

6.16 Origin Setting (Fn020)

When using an external absolute encoder for fully-closed loop control, this function is used to set the current position of the external absolute encoder as the origin (zero point position).
(Do not use origin setting in LECY series.)

This function can be used with the following products.
Mitutoyo Corporation ABS ST780A series
Model: ABS ST78□A/ST78□AL

IMPORTANT

- After execution of origin setting, the servo ready (/S-RDY) signal will become inactive because the system position data will have been changed. Always turn the power supply OFF and then ON again after execution of origin setting.

(1) Preparation

The following conditions must be met to set the origin.

- The write prohibited setting parameter (Fn010) must be set to Write permitted (P.0000).
- The servomotor power must be OFF.

(2) Operating Procedure

Use the following procedure.

1. In the SigmaWin+ Σ-V component main window, click **Setup** and then **Zero Point Position Setting**.
2. Click **Execute**.
3. Click **Continue** to execute the zero point position setting.
4. To enable the change in the setting, turn the power OFF and ON again.

For more information on the usage of the SigmaWin+, refer to AC Servo Drives Engineering Tool Sigma Win+ ONLINE MANUAL Σ-V Component *4.4.14 Setting the Zero Point Position.*

6.17 Software Reset (Fn030)

This function enables resetting the DRIVER internally from software. This function is used when reset- ting alarms and changing the settings of parameters that normally require restarting the DRIVER. This function can be used to change those parameters without restarting the DRIVER.

IMPORTANT	- Start software reset operation after the servomotor power is OFF. - This function resets the DRIVER independently of host controller. The DRIVER carries out the same processing as when the power supply is turned ON and outputs the ALM signal. The status of other output signals may be forcibly changed.

(1) Preparation

The following condition must be met to perform a software reset.
- The servomotor power must be OFF.

(2) Operating Procedure

Use the following procedure.

1. In the SigmaWin+ Σ-V component main window, click Setup and then click Software Reset.
2. Click Execute. The Software Reset window will appear.
3. Click Execute. When execution of the software reset function is complete, a warning message will appear, asking you to reconnect the SigmaWin+ to the DRIVER.
4. Click OK to close the Software Reset window. All settings including parameters have been re-calculated. Disconnect the SigmaWin+ from the DRIVER, and then reconnect.

For more information on the usage of the SigmaWin+, refer to AC Servo Drives Engineering Tool Sigma Win+ ONLINE MANUAL Σ-V Component *4.4.14 Setting the Zero Point Position.*

6.18 EasyFFT (Fn206)

EasyFFT sends a frequency waveform reference from the DRIVER to the servomotor and slightly rotates the servomotor several times over a certain period, thus causing machine vibration. The DRIVER detects the resonance frequency from the generated vibration and makes notch filter settings according to the resonance frequency detection. The notch filter is effective for the elimination of high-frequency vibration and noise.

Execute this function after the servomotor power is turned OFF if operation of the DRIVER results in high-frequency noise and vibration.

⚠ WARNING

The servomotor rotates slightly when EasyFFT is executed. Do not touch the servomotor or machine dur- ing execution of EasyFFT, otherwise injury may result.

⚠ CAUTION

Use the EasyFFT when the servo gain is low, such as in the initial stage of servo adjustment. If EasyFFT is executed after increasing the gain, the servo system may vibrate depending on the machine character- istics or gain balance.

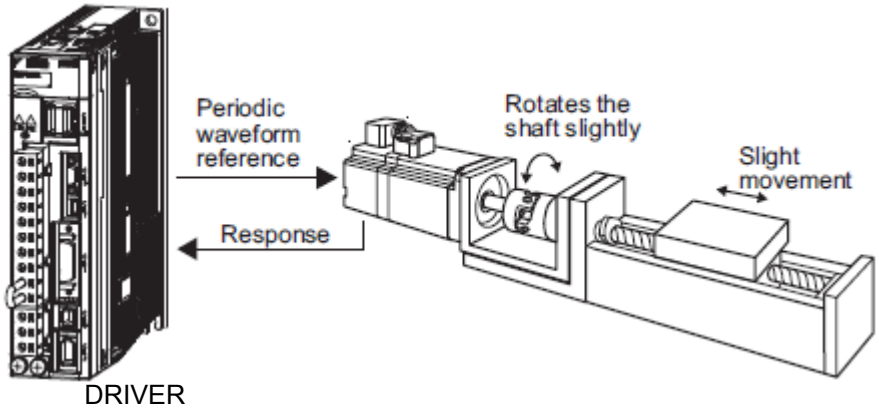

In addition to this function, online vibration monitor (Fn207) can be used to detect machine vibration and automatically make notch filter settings.

If a LECYU2-V□ Series is used to make adjustments, it is recommended to use advanced autotuning. EasyFFT is normally no need to use it.

(1) Preparation

The following conditions must be met to perform EasyFFT.

- The write prohibited setting parameter (Fn010) must be set to Write permitted (P.0000).
- The main circuit power supply must be ON.
- All alarms must be cleared.
- The hardwire baseblock (HWBB) must be disabled.
- The servomotor power must be OFF.
- There must be no overtravel.
- The test without a motor function must be disabled (Pn00C.0 = 0).
- An external reference must not be input.

(2) Operating Procedure

Use the following procedure.

1. In the SigmaWin+ Σ-V component main window, click **Setup** and then click **EasyFFT**.
2. Click **OK**, and the EasyFFT box appears.
3. Click **Servo ON**.
4. Select the instruction amplitude and the rotation direction, and click **Start**. The motor begins to rotate, and the measurement of the frequency starts. After the measurements have been taken, the results are displayed in the lower section of the box.
   Note: When making the initial settings for EasyFFT, do not change the setting for the reference amplitude. Start with the original value of 15. Increasing reference amplitude increases the detection accuracy, but the vibration and noise from the machine will increase. Increase the amplitude value little by little.
5. Click **Measurement complete**.
6. Click **Result Writing** to assign the results as parameter settings.
7. To enable the change in the setting, turn the power OFF and ON again.

< Important >
If two seconds or more are required for the operation although detection was successfully completed, the detection accuracy might be insufficient. Increasing reference amplitude more than 15 increases the detection accuracy, but the vibration and noise from the machine will increase. Increase the amplitude value little by little.

For more information on the usage of the SigmaWin+, refer to AC Servo Drives Engineering Tool Sigma Win+ ONLINE MANUAL Σ-V Component *4.4.8 EasyFFT*.

(3) Related Parameters

The following table lists parameters related to this function and their possibility of being changed while executing this function or of being changed automatically after executing this function.

- Parameters related to this function
  These are parameters that are used or referenced when executing this function.

- Allowed changes during execution of this function
  Yes : Parameters can be changed using SigmaWin+ while this function is being executed.
  No : Parameters cannot be changed using SigmaWin+ while this function is being executed.

- Automatic changes after execution of this function
  Yes : Parameter set values are automatically set or adjusted after execution of this function.
  No : Parameter set values are not automatically set or adjusted after execution of this function.

Parameter	Name	Mid-execution changes	Automatic changes
Pn408	Torque Related Function Switch	Yes	Yes
Pn409	1st Notch Filter Frequency	No	Yes
Pn40A	1st Notch Filter Q Value	No	No
Pn40C	2nd Notch Filter Frequency	No	Yes
Pn40D	2nd Notch Filter Q Value	No	No
Pn456	Sweep Torque Reference Amplitude	No	No

6.19 Online Vibration Monitor (Fn207)

If vibration is generated during operation and this function is executed while the servomotor power is still ON, the machine vibration can sometimes be suppressed by setting a notch filter or torque reference filter for the vibration frequencies.

When online, vibration frequency caused by machine resonance will be detected and the frequency that has the highest peak will be displayed on the panel operator. The effective torque reference filter or notch filter frequency for the vibration frequencies will be automatically selected and the related parameters will be automatically set.

In addition to this function, EasyFFT (Fn206) can be used to detect machine vibration and automatically make notch filter settings. Use the following flowchart to determine how these functions should be used.

If a LECYU2-V□ Series DRIVER is used to make adjustments, it is recommended that you use advanced autotuning. This function is normally no need to use it.

How to use EasyFFT (Fn206) and online vibration monitor (Fn207), when they are mainly used for servo gain adjustment.

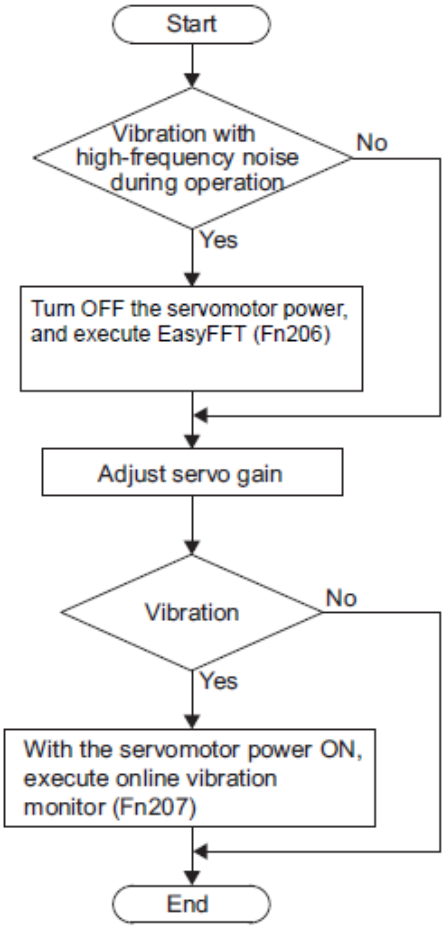

(1) Preparation

The following conditions must be met to perform online vibration monitoring.
- The write prohibited setting parameter (Fn010) must be set to Write permitted (P.0000).
- The servomotor power must be ON.
- There must be no overtravel.
- The correct moment of inertia (Pn103) must be set.
- The test without a motor function must be disabled (Pn00C.0 = 0).

(2) Operating Procedure

Use the following procedure.

1. In the SigmaWin+ Σ-V component main window, click **Monitor**, and then click **Online Vibration Monitor**.
2. Click **OK**, and the Online Vibration Monitor box appears.
3. Click **Execute** to activate the vibration sensor. The peak frequencies of the vibrations are displayed.
4. Click **Auto Setting**. In the "Previous" column, the current settings are displayed.
5. Click **Write result**. The adjusted values for detected frequencies are displayed in the "Current" column, and the values are stored in the SERVOPACK.

For more information on the usage of the SigmaWin+, refer to AC Servo Drives Engineering Tool Sigma Win+ ONLINE MANUAL Σ-V Component *4.3.4 Online Vibration Monitor.*

(3) Related Parameters

The following table lists parameters related to this function and their possibility of being changed while executing this function or of being changed automatically after executing this function.

- Parameters related to this function
  These are parameters that are used or referenced when executing this function.

- Allowed changes during execution of this function
  Yes : Parameters can be changed using SigmaWin+ while this function is being executed.
  No : Parameters cannot be changed using SigmaWin+ while this function is being executed.

- Automatic changes after execution of this function
  Yes : Parameter set values are automatically set or adjusted after execution of this function.
  No : Parameter set values are not automatically set or adjusted after execution of this function.

Parameter	Name	Mid-execution changes	Automatic changes
Pn401	Torque Reference Filter Time Constant	No	Yes
Pn408	Torque Related Function Switch	Yes	Yes
Pn409	1st Notch Filter Frequency	No	Yes
Pn40A	1st Notch Filter Q Value	No	No
Pn40C	2nd Notch Filter Frequency	No	No
Pn40D	2nd Notch Filter Q Value	No	No

7. Monitor Displeys

7.1 Monitor Displays

The monitor displays can be used for monitoring the I/O signal status, and DRIVER internal status.
There are five types of monitor windows: System Monitor, Status Monitor, Motion Monitor, Input Signal Monitor, and the Output Signal Monitor.
The monitor windows are independent of each other, but several windows can be displayed at the same time.
Select the items to be monitored in the Monitor Item Setting Window (For System Monitor, the items to be monitored are fixed and cannot be selected.)

The monitor display can be checked or viewed in the SigmaWin+. For more information on the usage of the SigmaWin+, refer to AC Servo Drives Engineering Tool Sigma Win+ ONLINE MANUAL Σ-V Component *4.3.2 Monitor.*

7.1.1 System Monitor

The System Monitor window will automatically open when the SigmaWin+ starts. Or, in the SigmaWin+ Σ-Vcomponent window, click **Monitor**, point to **Monitor**, and then click **System Monitor**.
The display is as follows.

- DRIVER current status
  Same as the status displayed on the panel operator on the front of DRIVER.
- DRIVER signal current status
  Same as the signal status displayed in bit data on the panel operator on the front of DRIVER.
- Starts the main functions directly from the System Monitor window.

7.1.2 Status Monitor

The status monitor function monitors the DRIVER status.
To monitor the status of the DRIVER, use the following procedure.

1. In the SigmaWin+ Σ-V component main window, click Monitor, point to Monitor and click Status Monitor. The items which can be monitored are listed.
2. Select the items to be monitored. The current status of a selected item is displayed in "Value" column.

7.1.3 Motion Monitor

The motion monitor function monitors the DRIVER motion.
To monitor the motions of the DRIVER.

1. In the SigmaWin+ Σ-V component main window, click **Monitor**, point to **Monitor** and click **Motion Monitor**. The items which can be monitored are listed.
2. Select the items to be monitored. The current status of a selected item is displayed in the "Value" column.

7.1.4 Input Signal Monitor

The input signal monitor function monitors the DRIVER input signals.
To monitor the input signals of the DRIVER.

1. In the SigmaWin+ Σ-V component main window, click **Monitor**, point to **Monitor** and click **Input Signal Monitor.** The items which can be monitored are listed.
2. Select the items to be monitored. The current status of a selected item is displayed in the "Value" column.

Note: Input signals use the following circuit configuration.
OFF: Open
ON: Short-circuited
Example

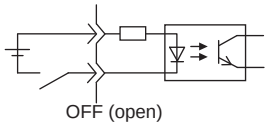

7.1.5 Output Signal Monitor

The output signal monitor function monitors the DRIVER output signals.
To monitor the output signals of the DRIVER, use the following procedure.

1. In the SigmaWin+ Σ-V component main window, click **Monitor**, point to **Monitor** and click **Output Signal Monitor**. The items which can be monitored are listed.
2. Select the items to be monitored. The current status of a selected item is displayed in the "Value" column.

Note: Input signals use the following circuit configuration.
OFF: Transistor OFF
ON: Transistor ON
Example

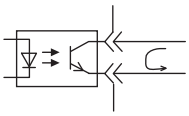

ON: Transistor ON

8. MECHATROLINK-III Commands

8.1 Layers

The MECHATROLINK-III communications layers have functions equivalent to layers 1, 2, and 7 in the OSI (Open System Interconnection) reference model.

Hierarchical Organization in the OSI Reference Model

OSI	MECHATROLINK-III Protocol
Layer 7: Application layer	MECHATROLINK-III application layer
Layers 3 to 6	None
Layer 2: Data link layer	ASIC dedicated to MECHATROLINK-III
Layer 1: Physical layer	Standard Ethernet PHY IEEE 802.3u

This chapter describes standard servo profile commands for the application layer.

8.2 Frame Structure

A standard servo profile command is composed of the combination of a main command and a subcommand as shown below. It is also possible to use a main command alone.

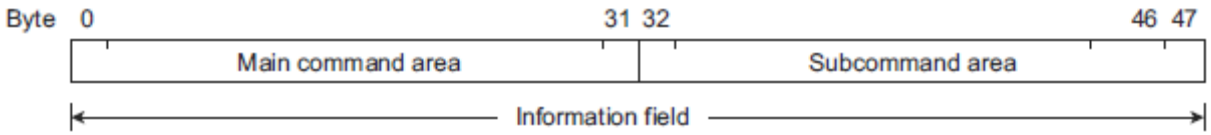

Classification	Byte	Command	Response
Information Field	0 to 31	Used by main commands.	
	32 to 47	Used by subcommands. The subcommands for servo commands use byte 33 to byte 48. Note: In some main commands, subcommand cannot be used.	

The application layer interfaces with only the information field.

8.3 State Transition Diagram

The master and slave station state transitions are shown in the following diagrams.

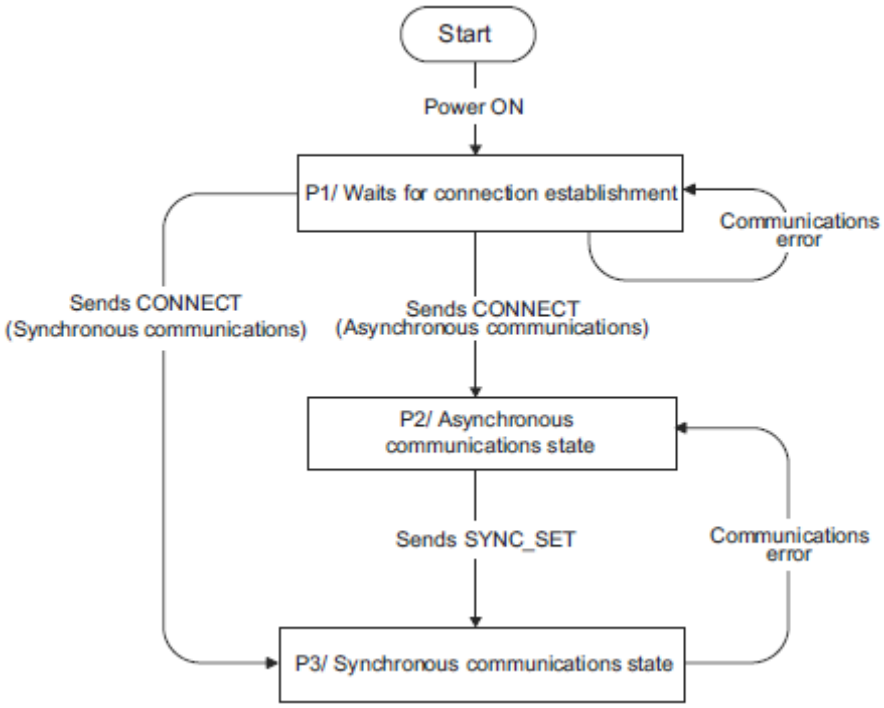

Master Station State Transition

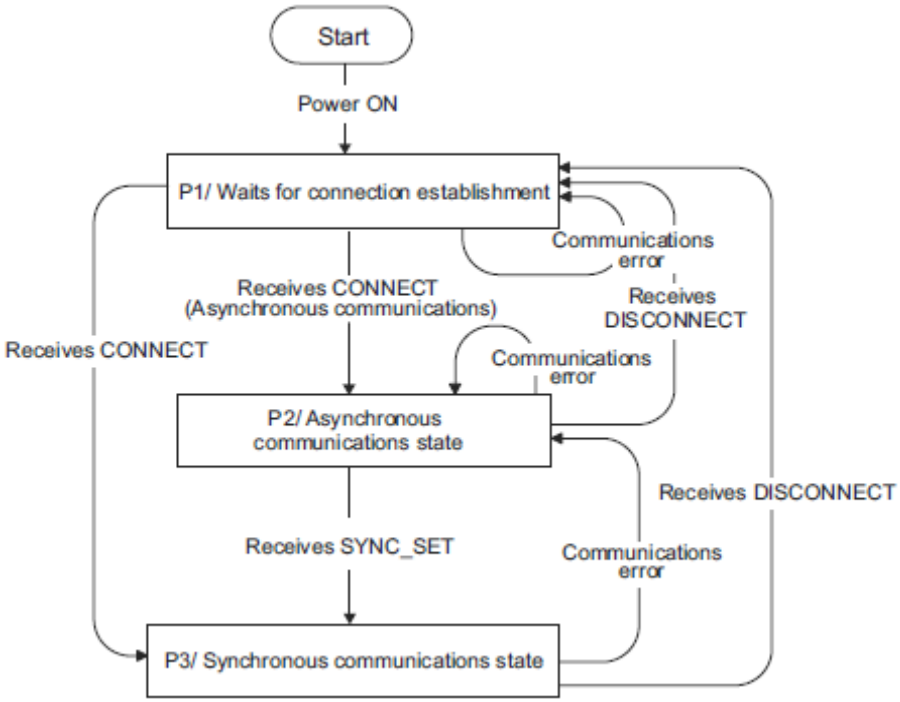

Slave Station State Transition

Phase	Abbreviation	Description
1	P1	Waiting for establishment of connection.
2	P2	Asynchronous communications enabled. Only asynchronous commands can be used.
3	P3	Synchronous communications enabled. Both synchronous and asynchronous commands can be used.

8.4 Command and Response Timing

This section describes command execution timing at the DRIVER and monitored data input timing at the master station.

These timings are constant, regardless of the transmission cycle and communication cycle.

8.4.1 Command Data Execution Timing

Motion commands (such as POSING and INTERPOLATE), and the servo command control and servo command I/O signals (SVCMD_CTRL and SVCMD_IO) are executed 312.5 μs after their reception.

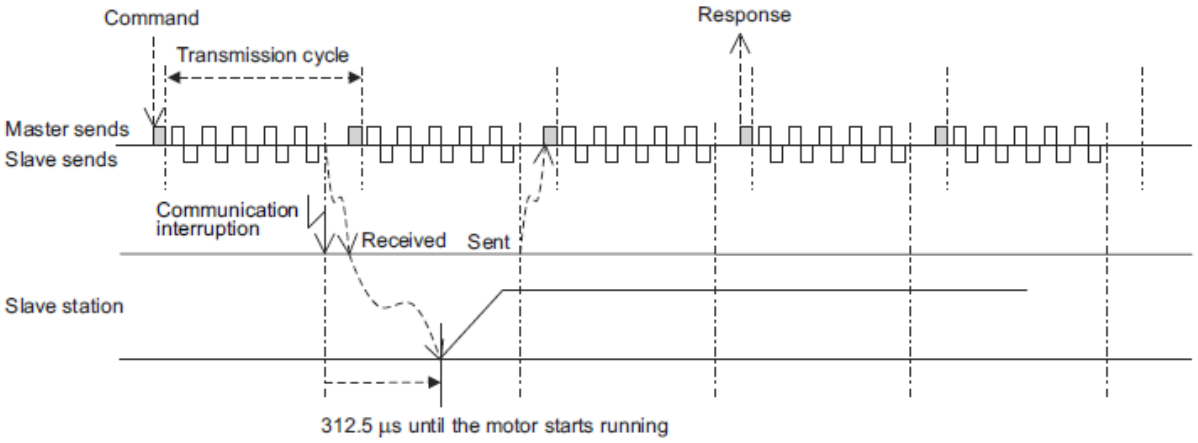

8.4.2 Monitored Data Input Timing

The monitor, I/O, and status data are the data of 312.5 μs before the response is sent.

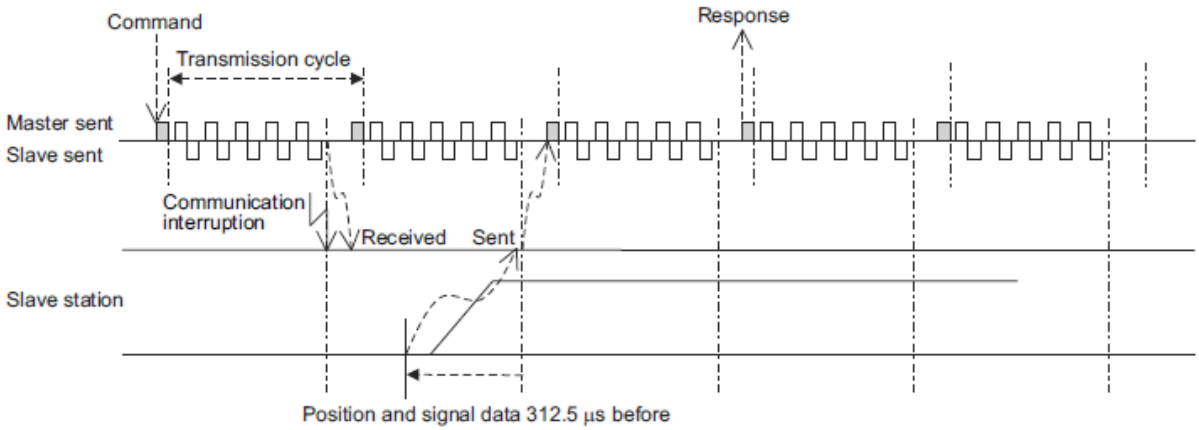

8.4.3 Supporting the Transmission Cycle of 125 µs

By adopting a shorter transmission cycle, the command throughput of the host PC or PLC...etc is improved by eliminating transmission delays.

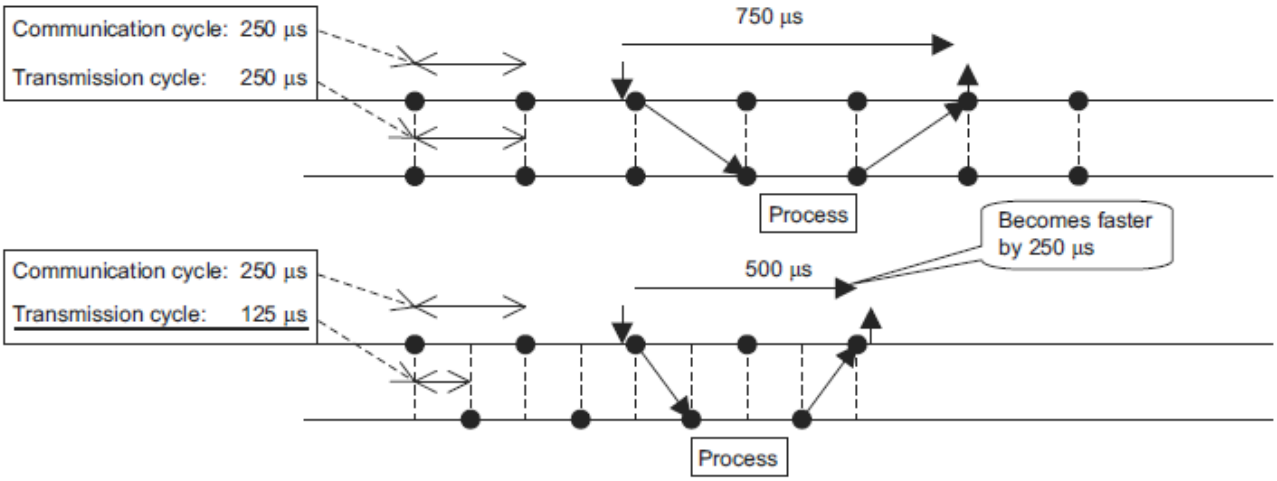

8.5 List of Commands

8.5.1 Command Types

Standard servo profile commands are classified into common commands and servo commands.

Common commands: Commands that are common for MECHATROLINK-III communications, independent of profiles
Servo commands: Commands that are defined in the standard servo profile and specific to DRIVERs

8.5.2 Main Commands

The standard servo profile main commands used for LECY series DRIVERs are listed below.

Category	Command Code (Hex.)	Command	Command Name	Function	Reference
Common Commands	00	NOP	No operation command	Nothing is performed.	8.13.2
	03	ID_RD	Read ID command	Reads the device ID.	8.13.3
	04	CONFIG	Device setup request command	Enables the current parameter settings.	8.13.4
	05	ALM_RD	Read alarm/ warning command	Reads the current alarm or warning status, and the alarm history.	8.13.5
	06	ALM_CLR	Clear alarm/ warning state command	Clears the current alarm or warning status, and the alarm history.	8.13.6
	0D	SYNC_SET	Request for establishing synchronization command	Starts synchronous communications.	8.13.7
	0E	CONNECT	Request for establishing connection command	Requests the establishment of a connection and setting of the communication mode.	8.13.8
	0F	DISCONNECT	Request for releasing connection command	Requests disconnection.	8.13.9
	1D	MEM_RD	Read memory command	Reads data from virtual memory.	8.13.10
	1E	MEM_WR	Write memory command	Writes data to virtual memory.	8.13.11
Servo Commands	20	POS_SET	Set coordinates command	Sets the coordinate system.	8.14.2
	21	BRK_ON	Request for applying lock command	Turns the lock signal OFF and applies the holding lock.	8.14.3
	22	BRK_OFF	Release lock command	Turns the lock signal ON and releases the holding lock.	8.14.4
	23	SENS_ON	Request for turning sensor ON command	Turns the encoder power supply ON, and gets the position data.	8.14.5
	24	SENS_OFF	Request for turning sensor OFF command	Turns the encoder power supply OFF.	8.14.6
	30	SMON	Monitor servo status command	Monitors the DRIVER status.	8.14.7
	31	SV_ON	Servo ON command	Turns the servo of the motor ON.	8.14.8
	32	SV_OFF	Servo OFF command	Turns the servo of the motor OFF.	8.14.9
	34	INTERPO-LATE	Interpolation command	Starts interpolation feeding.	8.14.10
	35	POSING	Positioning command	Starts positioning to the target position (TPOS) at the target speed (TSPD).	8.14.11

Category	Command Code (Hex.)	Command	Command Name	Function	Reference
Servo Commands	36	FEED	Constant speed feed command	Starts constant speed feeding at the target speed (TSPD).	8.14.12
	37	EX_FEED	Positioning at constant speed by external input command	Starts constant speed feeding at the target speed (TSPD). When an external signal is input part way through, positioning to the specified position is performed from the external signal input position.	8.14.13
	39	EX_POSING	Positioning by external input command	Starts positioning to the target position (TPOS) at the target speed (TSPD). When an external signal is input part way through, positioning to the specified position is performed from the external signal input position.	8.14.14
	3A	ZRET	Zero point return command	Performs zero point return.	8.14.15
	3C	VELCTRL	Velocity control command	Controls speed.	8.14.16
	3D	TRQCTRL	Torque control command	Controls torque.	8.14.17
	40	SVPRM_RD	Read servo parameter command	Reads the specified servo parameter.	8.14.18
	41	SVPRM_WR	Write servo parameter command	Writes the specified servo parameter.	8.14.19

8.5.3 Subcommands

The standard servo profile subcommands used for LECY series DRIVERs are listed below.

Category	Command Code (Hex.)	Command	Command Name	Function	Reference
Servo Commands	00	NOP	No operation command	Nothing is performed.	8.15.1
	05	ALM_RD	Read alarm/ warning command	Reads the current alarm or warning status, and the alarm history.	8.15.2
	06	ALM_CLR	Clear alarm/ warning state command	Clears the current alarm or warning status, and the alarm history.	8.15.3
	1D	MEM_RD	Read memory command	Reads data from virtual memory.	8.15.4
	1E	MEM_WR	Write memory command	Writes data to virtual memory.	8.15.5
	30	SMON	Monitor servo status command	Monitors the DRIVER status.	8.15.6
	40	SVPRM_RD	Read servo parameter command	Reads the specified servo parameter.	8.15.7
	41	SVPRM_WR	Write servo parameter command	Writes the specified servo parameter.	8.15.8

8.5.4 Combinations of Main Commands and Subcommands

The combinations of main commands and subcommands are listed below. When an invalid combination is specified, an alarm (SUBCMD_ALM = BM (A.95E)) occurs.

			Subcommands							
			NOP (00H)	ALM_RD (05H)	ALM_CLR (06H)	MEM_RD (1DH)	MEM_WR (1EH)	SMON (30H)	SVPRM_RD (40H)	SVPRM_WR (41H)
Main Commands	Common Commands	NOP (00H)	○	○	○	○	○	○	○	○
		ID_RD (03H)	○	○	○	○	○	○	○	○
		CONFIG (04H)	○	X	X	X	X	○	X	X
		ALM_RD (05H)	○	X	X	X	X	○	X	X
		ALM_CLR (06H)	○	X	X	X	X	○	X	X
		SYNC_SET (0DH)	○	X	X	X	X	○	X	X
		CONNECT (0EH)	○	X	X	X	X	X	X	X
		DISCONNECT (0FH)	○	X	X	X	X	X	X	X
		MEM_RD (1DH)	○	X	X	X	X	○	X	X
		MEM_WR (1EH)	○	X	X	X	X	○	X	X
	Servo Commands	POS_SET (20H)	○	X	X	X	X	○	X	X
		BRK_ON (21H)	○	X	X	X	X	○	X	X
		BRK_OFF (22H)	○	X	X	X	X	○	X	X
		SENS_ON (23H)	○	X	X	X	X	○	X	X
		SENS_OFF (24H)	○	X	X	X	X	○	X	X
		SMON (30H)	○	○	○	○	○	○	○	○
		SV_ON (31H)	○	○	○	○	○	○	○	○
		SV_OFF (32H)	○	○	○	○	○	○	○	○
		INTERPOLATE (34H)	○	○	○	○	○	○	○	○
		POSING (35H)	○	○	○	○	○	○	○	○
		FEED (36H)	○	○	○	○	○	○	○	○
		EX_FEED (37H)	○	○	○	○	○	○	○	○
		EX_POSING (39H)	○	○	○	○	○	○	○	○
		ZRET (3AH)	○	○	○	○	○	○	○	○
		VELCTRL (3CH)	○	○	○	○	○	○	○	○
		TRQCTRL (3DH)	○	○	○	○	○	○	○	○
		SVPRM_RD (40H)	○	X	X	X	X	○	X	X
		SVPRM_WR (41H)	○	X	X	X	X	○	X	X

○ : Can be combined
× : Cannot be combined

Note: Even for a valid combination, a command error (A.95A) occurs if the execution conditions of the commands are not satisfied.
Example: If initialization of a parameter is attempted by the MEM_WR command while sending the SV_ON command (during the servo ON state), a command error (A.95A) occurs instead of a command interference error (A.95E).

8.6 Common Command Format

This section describes the specifications that are common for all commands.

The format that is common for the commands sent from the master station and the responses returned from slave stations is shown below.

The format of a command can be divided into the main command area (32 bytes) and the subcommand area (16 bytes). The subcommand area is used to supplement the main command with another command. Whether the subcommand area is used or not is determined by the setting of the number of transmission bytes. When the number of transmission bytes is 32, the subcommand area is not used.

Both the main command area and subcommand area are divided into the command header section and the command data section.

Fields in the command header section of the main command area
- Command: CMD, WDT, CMD_CTRL
- Response: RCMD, RWDT, CMD_STAT

Fields in the command header section of the subcommand area
- Command: SUBCMD, SUB_CTRL
- Response: RSUBCMD, SUB_STAT

	Byte	Command	Response	Description
Main Command Area	0	CMD	RCMD	• CMD/RCMD: Command code specified for individual commands. Refer to *8.7.1 Command Code (CMD/RCMD)*. • WDT/RWDT: Refer to *8.7.2 Watchdog Data (WDT/RWDT)*. • CMD_CTRL: Refer to *8.7.3 Command Control (CMD_CTRL)*. • CMD_STAT: Refer to *8.7.4 Command Status (CMD_STAT)*. • CMD_DATA/RSP_DATA: Specified for individual commands.
	1	WDT	RWDT	
	2	CMD_CTRL	CMD_STAT	
	3			
	4	CMD_DATA	RSP_DATA	
	5			
	6			
	7			
	8			
	9			
	10			
	11			
	12			
	13			
	14			
	15			
	16			
	17			
	18			
	19			
	20			
	21			
	22			
	23			
	24			
	25			
	26			
	27			
	28			
	29			
	30			
	31			

	Byte	Command	Response	Description
Sub-command Area	32	SUBCMD	RSUBCMD	• SUBCMD/RSUBCMD: Command code specified for individual commands. Refer to *8.15 Subcommands*. • SUB_CTRL: Refer to *8.8.2 Subcommand Control (SUB_CTRL)*. • SUB_STAT: Refer to *8.8.3 Subcommand Status (SUB_STAT)*. • SUB_CMD_DATA/SUB_RSP_DATA: Specified for individual commands. Refer to *8.15 Subcommands*.
	33	SUB_CTRL	SUB_STAT	
	34			
	35			
	36	SUB_CMD_DATA	SUB_RSP_DATA	
	37			
	38			
	: :			
	45			
	46			
	47			

8.7 Command Header Section of Main Command Area

This section describes the command header section of the main command area.

8.7.1 Command Code (CMD/RCMD)

This is the command code that defines the meaning of the messaging. Byte 0 of the command format is defined as the CMD/RCMD field. The data set in this field of the response data is a copy of that of the command data.
The following table shows the command codes.

Profile	Command Code (Hex.)	Command	Operation	Compliance*1	Communication Phases*3		
					1	2	3
Common Commands	00	NOP	No operation	○	–	○	○
	01	PRM_RD	Read parameter	×*2	–	×	×
	02	PRM_WR	Write parameter	×*2	–	×	×
	03	ID_RD	Read ID	○	–	○	○
	04	CONFIG	Device setup request	Δ	–	○	○
	05	ALM_RD	Read alarm/warning	Δ	–	○	○
	06	ALM_CLR	Clear alarm/warning state	○	–	○	○
	0D	SYNC_SET	Request for establishing synchronization	○	–	○	Δ
	0E	CONNECT	Request for establishing connection	○	○	Δ	Δ
	0F	DISCONNECT	Request for releasing connection	○	○	○	○
	1B	PPRM_RD	Read stored parameter	×*2	–	×	×
	1C	PPRM_WR	Write stored parameter	×*2	–	×	×
	1D	MEM_RD	Read memory	Δ	–	○	○
	1E	MEM_WR	Write memory	Δ	–	○	○
Servo Commands	20	POS_SET	Set coordinates	○	–	○	○
	21	BRK_ON	Request for applying lock	○	–	○	○
	22	BRK_OFF	Release lock	○	–	○	○
	23	SENS_ON	Request for turning sensor ON	○	–	○	○
	24	SENS_OFF	Request for turning sensor OFF	○	–	○	○
	30	SMON	Monitor servo status	○	–	○	○
	31	SV_ON	Servo ON	○	–	○	○
	32	SV_OFF	Servo OFF	○	–	○	○
	34	INTERPOLATE	Interpolation	○	–	×	○
	35	POSING	Positioning	○	–	○	○
	36	FEED	Constant speed feed	○	–	○	○
	37	EX_FEED	Positioning at constant speed by external input	○	–	○	○
	39	EX_POSING	Positioning by external input	○	–	○	○
	3A	ZRET	Zero point return	○	–	○	○
	3C	VELCTRL	Velocity control	○	–	○	○
	3D	TRQCTRL	Torque (force) control	○	–	○	○
	40	SVPRM_RD	Read servo parameter	Δ	–	○	○
	41	SVPRM_WR	Write servo parameter	○	–	○	○

*1. Indicates the compliance status.
○ : Possible, Δ: Possible with specification restrictions (Refer to the subsection describing each command for the details of the restrictions.), ×: Not possible

*2. The standard servo command profile does not use PRM_RD, PRM_WR, PPRM_RD and PPRM_WR, but uses SVPRM_RD and SVPRM_WR instead.

*3. ○ : Can be executed, Δ: Ignored, ×: Command error, –: Indefinite response data

8.7.2 Watchdog Data (WDT/RWDT)

The details of the watchdog timer (WDT) data in commands and responses are described below. Byte 1 of the command/response format is specified as the WDT/RWDT field.

	D7 D4	D3 D0	
WDT	SN: Copy of RSN in RWDT	MN: Incremented by 1 each communication cycle	MN: Master station watchdog timer count
	D7 D4	D3 D0	
RWDT	RSN: Incremented by 1 each communication cycle	RMN: Copy of MN in WDT	RSN: DRIVER's watchdog timer count

The watchdog data (WDT) is checked after establishing synchronous communications (phase 3).
The watchdog data (RWDT) at the DRIVER will be refreshed regardless of the establishment of synchronous communications.

8.7.3 Command Control (CMD_CTRL)

The following describes the command control data.

Byte 2 and byte 3 of the command format are specified as the CMD_CTRL field.

The designation in the CMD_CTRL field is valid even when an alarm specified by CMD_ALM has occurred.
The CMD_CTRL field is specified as shown below by the communication specification.

bit 7	bit 6	bit 5	bit 4	bit 3	bit 2	bit 1	bit 0
CMD_ID		Reserved	Reserved	ALM_CLR	Reserved	Reserved	Reserved

bit 15	bit 14	bit 13	bit 12	bit 11	bit 10	bit 9	bit 8
Reserved	Reserved	Reserved	Reserved	Reserved	Reserved	Reserved	Reserved

(1) ALM_CLR: Clear Alarm/Warning State

- Definition

Clears the alarms and warnings that have occurred in the DRIVER.

0: Clear alarm/warning disabled
1: Clear alarm/warning triggered

- Description

Clears the alarm/warning state at the leading edge.
The same processing as when ALM_CLR_MODE = 0 for the ALM_CLR command (the current alarm/warning state is cleared) is performed.

(2) CMD_ID: Command ID

- Definition

The master station uses the command ID to have a slave station acknowledge that the command is a new command when the master station sends the same command repeatedly to the slave station.

Applicable commands: EX_FEED, EX_POSING, ZRET A value in the range 0 to 3 is used.

- Description

Since the slave station returns the CMD_ID of the command being executed, the master station can decisively judge the command to which the slave station sent the response.
While CMD_RDY = 0 (while the execution process of the command is incomplete), the slave station disregards commands that have a different CMD_ID and continues the execution of the command being executed.

8.7.4 Command Status (CMD_STAT)

The following describes the status of responses.
Byte 2 and byte 3 of the response format are specified as the CMD_STAT field.
The CMD_STAT field is specified as shown below by the communication specification.

bit 7	bit 6	bit 5	bit 4	bit 3	bit 2	bit 1	bit 0
RCMD_ID		Reserved	Reserved	ALM_CLR_CMP	CMDRDY	D_WAR	D_ALM

bit 15	bit 14	bit 13	bit 12	bit 11	bit 10	bit 9	bit 8
COMM_ALM				CMD_ALM			

(1) D_ALM

- Definition

This bit indicates the device alarm state of the slave station.
1: A device-specific alarm has occurred.
0: Other state (normal state, or the alarm specified by COMM_ALM or CMD_ALM has occurred.)

- Description

When a device-specific alarm other than the alarm state specified by COMM_ALM and CMD_ALM has occurred, the D_ALM status bit is set to "1."
D_ALM is independent of COMM_ALM and CMD_ALM.
When a device-specific alarm has occurred and D_ALM is set to "1" in the servo ON state, the servo OFF state is established.
When the slave station shifts from the alarm state to the normal state as a result of the execution of the ALM_CLR command or CMD_CTRL.ALM_CLR, this bit is set to "0."

[Example]
Device alarm: Excessive position error (A.D00) → D_ALM = 1

(2) D_WAR

- Definition

This bit indicates the device warning state of the slave station.
1: A device-specific warning has occurred.
0: Other state (normal state, or the alarm specified by COMM_ALM or CMD_ALM has occurred.)

- Description

When a device-specific warning other than the warning state specified by COMM_ALM or CMD_ALM has occurred, the D_WAR status bit is set to "1."
D_WAR is independent of COMM_ALM and CMD_ALM.
When a device-specific warning has occurred and the D_WAR status bit is set to "1" in the servo ON state, the servo ON state is retained.
When the slave station shifts from the device warning state to the normal state as a result of the execution of the ALM_CLR command or CMD_CTRL.ALM_CLR, this bit is set to "0."

[Example]
Device warning: Overload warning (A.910) → D_WAR = 1

(3) CMDRDY

- Definition

This bit indicates whether the slave station is ready to receive commands.

1: Command reception enabled
0: Command reception disabled

- Description

CMDRDY = 0 means that command processing is in progress. While CMDRDY = 0, the slave station con- tinues to process the current command, but the slave station will discard new commands received while CMDRDY = 0.
Only the DISCONNECT command is executed immediately regardless of the CMDRDY value.
Completion of command execution is confirmed in accordance with the completion confirmation method of each command.
The hold time for CMDRDY = 0 is specified for each command.
If command execution is possible despite an alarm or warning state, CMDRDY is set to "1."

(4) ALM_CLR_CMP

- Definition

This bit indicates the execution state of the ALM_CLR command.

1: Execution of the ALM_CLR command (CMD_CTRL.ALM_CLR) completed
0: Other

- Description

ALM_CLR_CMP is set to "1" in the following cases.
When the alarm clear processing executed by the ALM_CLR command has been completed ALM_CLR_CMP is set to "1" when the alarm cannot be cleared as well.
When the alarm clear processing time (approx. 200 ms) has elapsed after receiving the ALM_CLR command.
ALM_CLR_CMP is set to "1" when the alarm cannot be cleared as well.
ALM_CLR_CMP can be cancelled by setting "0" for CMD_CTRL.ALM_CLR.

(5) RCMD_ID

- Definition

This is the echo-back of the CMD_ID in the CMD_CTRL field of the command data.

- Description

This is the identification code of the same commands that the slave station has received contiguously.
Returns the CMD_ID of the command format.

(6) CMD_ALM

- Definition

This bit indicates the validation result of the command.

- Description

CMD_ALM indicates whether the command is valid or not. The results of validations of the command codes, and the combinations of commands and the data in the command frame are notified.
CMD_ALM is independent of COMM_ALM, D_ALM and D_WAR.
If a normal command is received after the occurrence of a command error, CMD_ALM is automatically cleared.
The phase doesn't change even if the status of CMD_ALM is not "0." The servo ON/OFF state doesn't change either.

Code		Description	Remark
	0	Normal	
Warning	1	Invalid data	The slave station notifies the warning state, but operates at the specified value or the value on clamping at the maximum or minimum value.
	2		
	3		
	4		
	5		
	6		
	7		
Alarm	8	Unsupported command received	The slave station notifies the alarm state and the command is not executed.
	9	Invalid data	
	A	Command execution condition error	
	B	Subcommand combination error	
	C	Phase error	
	D		
	E		
	F		

[Example]
Command error: Invalid data (A.94B) → CMD_ALM = 9H

IMPORTANT

Check the status of CMD_ALM with the host PC or PLC...etc for every communication cycle and perform appropriate processing because CMD_ALM will be automatically cleared.

(7) COMM_ALM

- Definition

This bit indicates the MECHATROLINK communications error status.

- Description

COMM_ALM shows if the data transmission in the physical or application layer has completed normally or not.
COMM_ALM is independent of CMD_ALM, D_ALM and D_WAR.
COMM_ALM is cleared by the ALM_CLR command or CMD_CTRL.ALM_CLR.

Code		Description	Remark
	0	Normal	
Warning	1	FCS error	Occurs when an error is detected once. The servo ON state is retained when an error is detected in the servo ON state. Error detection method 1: FCS error The DRIVER detects FCS errors. 2: Command data not received The DRIVER detects that command data has not been received. 3: Synchronous frame not received The DRIVER detects that the synchronous frame has not been received.
	2	Command data not received	
	3	Synchronous frame not received	
	4		
	5		
	6		
	7		
Alarm	8	FCS error	Occurs when an error is detected in the following detection methods. • If the system is in communication phase 3, it will shift to communication phase 2. • Establishes the servo OFF state. Error detection method 8, 9, A: Set if an error is detected twice consecutively using the error detection method for warnings 1, 2 and 3 described above. B, C: Set immediately upon occurrence of a single error.
	9	Command data not received	
	A	Synchronous frame not received	
	B	Synchronization interval error	
	C	WDT error	
	D		
	E		
	F		

[Example]
Communications error (warning): Reception error warning (A.960) → COMM_ALM = 2H
Communications error (alarm): Reception error alarm (A.E60) → COMM_ALM = 9H

8.8 Command Header Section of Subcommand Area

Subcommands use byte 32 to byte 47 of the data field and function as a supplementary command to the main command. This subsection describes the command header section of the subcommand area.

8.8.1 Subcommand Codes (SUB_CMD/SUB_RCMD)

This is the subcommand code that specifies the meaning of the subcommand messaging. Byte 32 of the command format is defined as the SUB_CMD/SUB_RCMD field. The data set in this field of the response data is a copy of that of the command data.

The following table shows the subcommand codes.

Profile	Command Code (Hex.)	Command	Operation	Communication Phases*2		
				1	2	3
Servo Commands	00	NOP	No operation	–	○	○
	05	ALM_RD*1	Read alarm/warning	–	○	○
	06	ALM_CLR	Clear alarm/warning state	–	○	○
	1D	MEM_RD*1	Read memory command	–	○	○
	1E	MEM_WR*1	Write memory command	–	○	○
	30	SMON	Monitor servo status	–	○	○
	40	SVPRM_RD*1	Read servo parameter	–	○	○
	41	SVPRM_WR	Write servo parameter	–	○	○

*1. Specification restrictions apply (Refer to the subsection describing each command for the details of the restrictions.)
* 2. ○ : Can be executed, Δ: Ignored, ×: Command error, –: Indefinite response data

8.8.2 Subcommand Control (SUB_CTRL)

The following describes the subcommand control data.
Byte 33 to byte 35 of the command format are specified as the SUB_CTRL field.
The SUB_CTRL field is specified as shown below by the communication specification.

(1) SUB_CTRL Field

bit 7	bit 6	bit 5	bit 4	bit 3	bit 2	bit 1	bit 0
Reserved		Reserved		Reserved			

bit 15	bit 14	bit 13	bit 12	bit 11	bit 10	bit 9	bit 8
SEL_MON4				Reserved			

bit 23	bit 22	bit 21	bit 20	bit 19	bit 18	bit 17	bit 16
SEL_MON6				SEL_MON5			

(2) Details of Control Bits

The following table shows the details of the control bits.

Bit	Name	Description	Value	Setting
12 to 15	SEL_MON4	Monitor selection 4	0 to 15	Selects the monitor information with the setting value.
16 to 19	SEL_MON5	Monitor selection 5	0 to 15	Selects the monitor information with the setting value.
20 to 23	SEL_MON6	Monitor selection 6	0 to 15	Selects the monitor information with the setting value.

8.8.3 Subcommand Status (SUB_STAT)

The following describes the subcommand status of responses.
Byte 33 to byte 35 of the response format are specified as the SUB_STAT field.
The SUB_STAT field is specified as shown below by the communication specification.

(1) SUB_STAT Field

bit 7	bit 6	bit 5	bit 4	bit 3	bit 2	bit 1	bit 0
Reserved		Reserved		Reserved	SUBCMDRDY	Reserved	Reserved

bit 15	bit 14	bit 13	bit 12	bit 11	bit 10	bit 9	bit 8
SEL_MON4				SUBCMD_ALM			

bit 23	bit 22	bit 21	bit 20	bit 19	bit 18	bit 17	bit 16
SEL_MON6				SEL_MON5			

(2) Details of Status Bits

The following table shows the details of the status bits.

Bit	Name	Description	Value	Setting
2	SUBCMDRDY*	Subcommand ready	1	Subcommand reception enabled
			0	Other
8 to 11	SUBCMD_ALM	Subcommand alarm	0 to 15	Refer to *8.7.4 Command Status (CMD_STAT) (6).*
12 to 15	SEL_MON4	Monitor selection 4	0 to 15	Indicates the selected monitor information. (Copy of the command)
16 to 19	SEL_MON5	Monitor selection 5	0 to 15	Indicates the selected monitor information. (Copy of the command)
20 to 23	SEL_MON6	Monitor selection 6	0 to 15	Indicates the selected monitor information. (Copy of the command)

∗ When no subcommand is used, the SUBCMDRDY status bit is set to "1."

8.9 Servo Command Format

This section describes the specifications of the servo commands.
The servo commands are specified by the 32-byte command and response data in the communication specifications as shown in the table below.

The command/response data area can be expanded to 48 bytes by using subcommands. For the subcommands, refer to *8.15 Subcommands*.

The following table shows the format of the servo command and response data.

Byte	Command	Response	Description
0	CMD	RCMD	• CMD_CTRL: Refer to *8.7.3 Command Control (CMD_CTRL)*. • CMD_STAT: Refer to *8.7.4 Command Status (CMD_STAT)*. • SVCMD_CTRL: Refer to *8.10.1 Servo Command Control (SVCMD_CTRL)*. • SVCMD_STAT: Refer to *8.10.2 Servo Command Status (SVCMD_STAT)*. • SVCMD_IO: Refer to *8.11 Servo Command I/O Signal (SVCMD_IO)*. • CMD_DATA/RSP_DATA: Specified for individual commands.
1	WDT	RWDT	
2	CMD_CTRL	CMD_STAT	
3			
4	SVCMD_CTRL	SVCMD_STAT	
5			
6			
7			
8	SVCMD_IO	SVCMD_IO	
9			
10			
11			
12	CMD_DATA	RSP_DATA	
13			
14			
15			
16			
17			
18			
19			
20			
21			
22			
23			
24			
25			
26			
27			
28			
29			
30			
31			

8.10 Command Header Section

Refer to *8.7 Command Header Section of Main Command Area* for the details of the command header section (command code, watchdog data and command control fields).

8.10.1 Servo Command Control (SVCMD_CTRL)

Byte 4 to byte 7 of the command format are specified as the SVCMD_CTRL field. The control bit specifies a motion command for a slave station.

The SVCMD_CTRL field contains auxiliary data for the specified command and the control bits have no meaning with commands other than the command that specified the data.
Note that the designation in this field is valid even when a CMD_ALM has occurred.
The SVCMD_CTRL field is specified as shown below by the communication specification.

(1) SVCMD_CTRL Field

bit 7	bit 6	bit 5	bit 4	bit 3	bit 2	bit 1	bit 0
Reserved (0)		ACCFIL		STOP_MODE		CMD_ CANCEL	CMD_ PAUSE

bit 15	bit 14	bit 13	bit 12	bit 11	bit 10	bit 9	bit 8
Reserved (0)		LT_SEL2		LT_SEL1		LT_REQ2	LT_REQ1

bit 23	bit 22	bit 21	bit 20	bit 19	bit 18	bit 17	bit 16
SEL_MON2				SEL_MON1			

bit 31	bit 30	bit 29	bit 28	bit 27	bit 26	bit 25	bit 24
Reserved (0)				SEL_MON3			

(2) Details of Control Bits

The following table shows the details of the control bits.

Bit	Name	Description	Value	Setting	Enabled Timing
0	CMD_PAUSE	Pause of Move Command	0	None	Level
			1	Move command pause command	
	Pauses execution of the POSING, FEED, EX_FEED, EX_POSING, ZRET and VELCTRL commands according to STOP_MODE.				
1	CMD_CANCEL	Cancellation of Move Command	0	None	Level
			1	Cancellation of move command	
	Cancels execution of the POSING, FEED, EX_FEED, EX_POSING, ZRET and VELCTRL commands according to STOP_MODE.				
2, 3	STOP_MODE	Selection of Stop Mode	0	Stop after deceleration	Level
			1	Immediate stop	
			2	Reserved	
			3	Reserved	
	Selects the stop mode for CMD_PAUSE and CMD_CANCEL.				

Bit	Name	Description	Value	Setting	Enabled Timing
4, 5	ACCFIL	Selection of Position Reference Filter	0	No position reference filter	Level
			1	Exponential function position reference filter	
			2	Movement average position reference filter	
			3	Reserved	
	To be set when specifying the position reference filter.				
8	LT_REQ1	Latch Request 1	0	None	Leading edge
			1	Request for latch	
	Requests latch by the C phase or an external input signal.				
9	LT_REQ2	Latch Request 2	0	None	Leading edge
			1	Request for latch	
	Requests latch by the C phase or an external input signal. This can be used as the continuous latch mode as well.				
10, 11	LT_SEL1	Latch Signal Select 1	0	C phase	Leading edge of LT_REQ1
			1	External input signal 1	
			2	External input signal 2	
			3	External input signal 3	
	Selects the C phase or the external input signal for LT_REQ1. Make a setting different from LT_SEL2.				
12, 13	LT_SEL2	Latch Signal Select 2	0	C phase	Leading edge of LT_REQ2
			1	External input signal 1	
			2	External input signal 2	
			3	External input signal 3	
	Selects the C phase or the external input signal for LT_REQ2. Make a setting different from LT_SEL1. When the continuous latch mode is selected, this setting will be ignored since the signal set with the parameter is used.				
16 to 18	SEL_MON1	Monitor Selection 1	0 to 15	Monitor selection	Level
	Sets the monitor information.				
19 to 22	SEL_MON2	Monitor Selection 2	0 to 15	Monitor selection	Level
	Sets the monitor information.				
23 to 26	SEL_MON3	Monitor Selection 3	0 to 15	Monitor selection	Level
	Sets the monitor information.				

8.10.2 Servo Command Status (SVCMD_STAT)

Byte 4 to byte 7 of the response format are specified as the SVCMD_STAT field. The status bit indicates the status of the slave station.
Note that the designation in this field is valid even when a CMD_ALM has occurred.
The SVCMD_STAT field is specified as shown below by the communication specification.

(1) SVCMD_STAT Field

bit 7	bit 6	bit 5	bit 4	bit 3	bit 2	bit 1	bit 0
Reserved (0)		ACCFIL		Reserved (0)		CMD _CANCEL _CMP	CMD _PAUSE _CMP

bit 15	bit 14	bit 13	bit 12	bit 11	bit 10	bit 9	bit 8
Reserved (0)		SV_ON	M_RDY	PON	POS_RDY	L_CMP2	L_CMP1

bit 23	bit 22	bit 21	bit 20	bit 19	bit 18	bit 17	bit 16
SEL_MON2				SEL_MON1			

bit 31	bit 30	bit 29	bit 28	bit 27	bit 26	bit 25	bit 24
Reserved (0)				SEL_MON3			

(2) Details of Status Bits

The following table shows the details of the status bits.

bit	Name	Description	Value	Setting
0	CMD_PAUSE_CMP	Completion of Pause of Move Command	0	Incomplete (when pausing commanded)
			1	Pausing of move command completed
	The status used to judge the completion of pausing of the POSING, FEED, EX_FEED, EX_POSING, ZRET and VELCTRL commands			
1	CMD_CANCEL_ CMP	Completion of Cancellation of Move Command	0	Incomplete (when cancellation commanded)
			1	Cancellation of move command completed
	The status used to judge the completion of cancellation of the POSING, FEED, EX_FEED, EX_POSING, ZRET and VELCTRL commands			
4, 5	ACCFIL	Current Position Reference Filter	0	No position reference filter
			1	Exponential function position reference filter
			2	Movement average position reference filter
			3	Reserved
	The status used to judge the position reference filter currently being applied			
8	L_CMP1	Latch Completion 1	0	Latch not completed
			1	Latch completed
	The status used to judge the completion of latching requested by LT_REQ1 Up until "0" is set for LT_REQ1, L_CMP1 is maintained at "1."			
9	L_CMP2	Latch Completion 2	0	Latch not completed
			1	Latch completed
	The status used to judge the completion of latching requested by LT_REQ2 Up until "0" is set for LT_REQ2, L_CMP2 is maintained at "1." In the continuous latch mode, L_CMP2 is returned to "0" after one communication cycle after completing latching.			

bit	Name	Description	Value	Setting
10	POS_RDY	Position Data Enabled	0	Disabled
			1	Enabled
	The status used to judge if the position data currently being monitored as the monitor information of the response data is valid When an incremental encoder is used: "1" is set on completion of the CONNECT command. When an absolute encoder is used: "1" is set on completion of the SENS_ON command and "0" is set on completion of the SENS_OFF and CONFIG commands. When position data cannot be obtained properly due to an encoder error, "0" is set.			
11	PON	Power ON	0	Power OFF
			1	Power ON
	The status used to judge if the power is turned ON or not			
12	M_RDY	Motor Energization Ready	0	Not ready
			1	Ready
	The status used to judge if the servo can be turned ON or not			
13	SV_ON	Servo ON	0	Servo OFF
			1	Servo ON
	The status used to judge if the motor is energized or not			
16 to 19	SEL_MON1	Monitor Selection 1: Returns what data is being monitored.	0 to 15	Monitor selection
	The status used to judge the data currently being monitored as the monitor information of the response data (Copy of the command) For details, refer to *8.12.3 Specifying Monitor Data*.			
20 to 23	SEL_MON2	Monitor Selection 2: Returns what data is being monitored.	0 to 15	Monitor selection
	The status used to judge the data currently being monitored as the monitor information of the response data (Copy of the command) For details, refer to *8.12.3 Specifying Monitor Data*.			
24 to 27	SEL_MON3	Monitor Selection 3: Returns what data is being monitored.	0 to 15	Monitor selection
	The status used to judge the data currently being monitored as the monitor information of the response data (Copy of the command) For details, refer to *8.12.3 Specifying Monitor Data*.			

8.10.3 Supplementary Information on CMD_PAUSE and CMD_CANCEL

(1) CMD_PAUSE (Pausing a Command Operation)

CMD_PAUSE is used to pause motion command operation. (Motion command processing continues. Motion command operation can be resumed by clearing CMD_PAUSE.)
CMD_PAUSE is valid only when the POSING, FEED, EX_FEED, EX_POSING, ZRET or VELCTRL command is specified.

[Pausing Procedure]

1. The master station sets "1" for STOP_MODE and CMD_PAUSE and transmits one of the motion commands given above.
2. The slave station stops in accordance with STOP_MODE. When deceleration to a stop is specified, the slave station decelerates its motion at the deceleration specified in DECR of the command.
3. "1" is set for CMD_PAUSE_CMP at the slave station when CMD_PAUSE and ZSPD become "1."
   Even after stopping, the slave station maintains the previous control mode and DEN remains at "0" (in the position control mode).

[Precautions]

CMD_PAUSE is disregarded for commands for which CMD_PAUSE is not valid, and CMD_PAUSE_CMP remains OFF.
When using CMD_PAUSE, execute the relevant motion command continuously until CMD_PAUSE_CMP becomes "1."
By setting "0" for CMD_PAUSE, the pausing operation is canceled and the motion command operation is resumed.

[Example of Pausing the POSING Command]

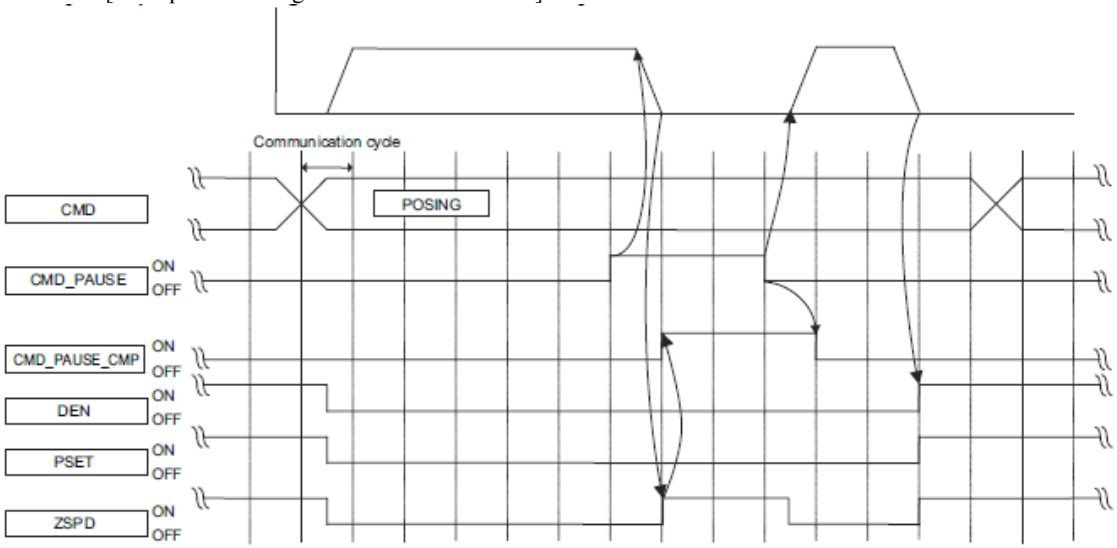

[Example of Pausing the VELCTRL Command]

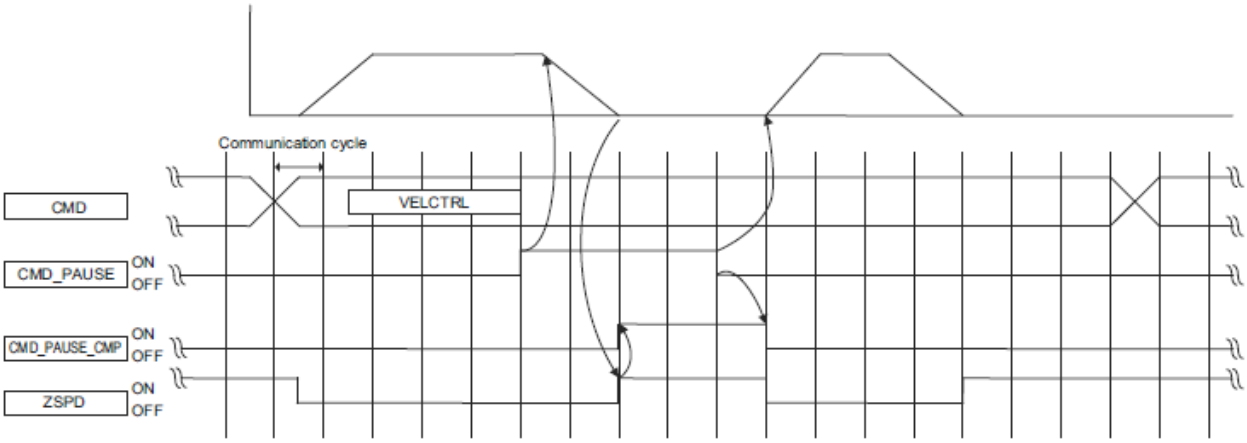

(2) CMD_CANCEL (Canceling a Command Operation)

CMD_CANCEL is used to interrupt motion command operation. (Motion command processing is cleared.)
CMD_CANCEL is valid only when the POSING, FEED, EX_FEED, EX_POSING, ZRET or VELCTRL command is specified.

[Canceling Procedure]

1. The master station sets "1" for STOP_MODE and CMD_PAUSE and transmits one of the motion commands given above.
2. The slave station stops in accordance with STOP_MODE. When deceleration to a stop is specified, the slave station decelerates its motion at the deceleration specified in DECR of the command.
3. "1" is set for CMD_CANCEL_CMP at the slave station in the following circumstances.
   In the position control mode: When CMD_PAUSE and DEN become "1"
   In the speed control mode: When CMD_CANCEL and ZSPD become "1" Even after stopping, the slave station maintains the previous control mode.

[Precautions]

CMD_CANCEL is disregarded for commands for which CMD_CANCEL is not valid, and CMD_CANCEL_CMP remains OFF.
When CMD_PAUSE and CMD_CANCEL are simultaneously turned ON or when CMD_CANCEL is turned ON after CMD_PAUSE, CMD_CANCEL takes priority.
When using CMD_CANCEL, execute the relevant motion command continuously until CMD_CANCEL_CMP becomes "1."
By setting "0" for CMD_CANCEL, the cancellation operation is canceled and the motion command is processed as a new motion command.

[Example of Canceling the POSING Command]

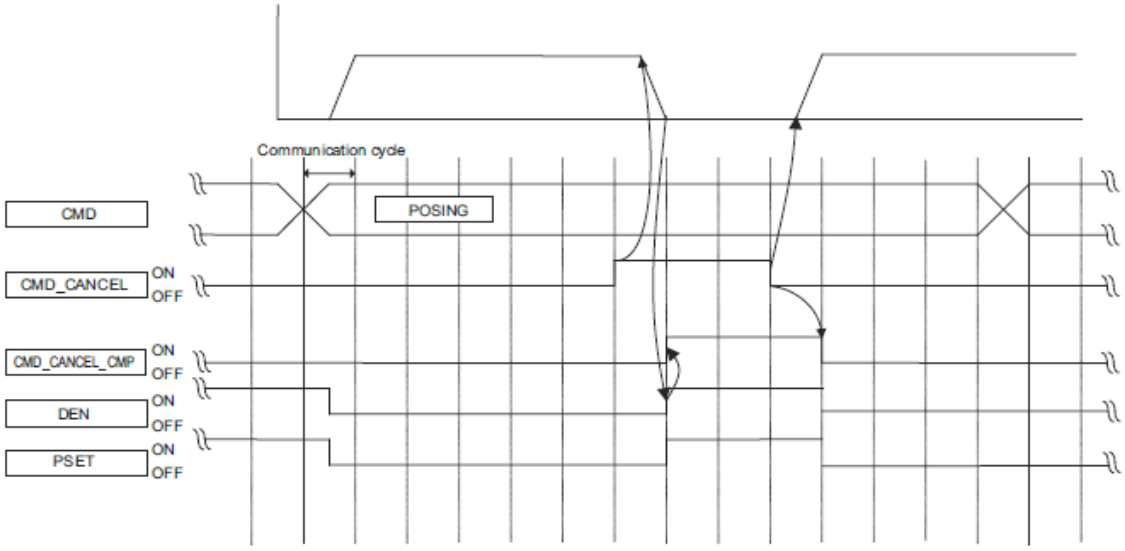

[Example of Canceling the VELCTRL Command]

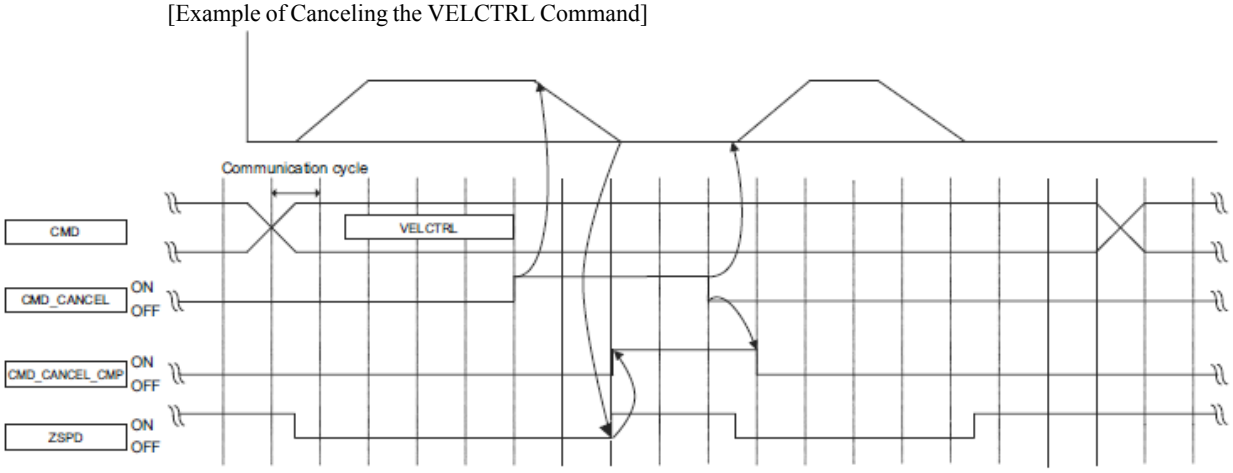

8.10.4 Supplementary Information on Latching Operation

The latch operation is enabled at the leading edge of LT_REQ1 and LT_REQ2. The operations to be per- formed when commands are changed after enabling the latch operation are specified in the table below. (The value of LT_SEL is an example.)

Command before Switching	Command after Switching	Latch Operation
Command without a latch function LT_SEL = 1 LT_REQ = 1	Common commands	Continues the latch request before switching.
Command with a latch function LT_SEL = 1 LT_REQ = 1	Common commands	Interrupts operation as a command with a latch function.
Command without a latch function LT_SEL = 1 LT_REQ = 1	Command without a latch function LT_SEL = 1 LT_REQ = 1	Continues the latch request before switching.
Command without a latch function LT_SEL = 1 LT_REQ = 1	Command without a latch function LT_SEL = 2 LT_REQ = 1	Continues the latch request before switching.
Command without a latch function LT_SEL = 1 LT_REQ = 1	Command with a latch function LT_SEL = 1 LT_REQ = 1	Switches to a latch request for the command after switching. The servo drive executes another latch request. (Internal processing) If the status "L_CMP = 1" is established before command switching, then the status is set to "L_CMP = 0" at command switching.
Command with a latch function LT_SEL = 1 LT_REQ = 1	Command without a latch function LT_SEL = 1 LT_REQ = 1	Switches to a latch request for the command after switching. The servo drive executes another latch request. (Internal processing) If the status "L_CMP = 1" is established before command switching, then the status is set to "L_CMP = 0" at command switching.
Command with a latch function LT_SEL = 1 LT_REQ = 1	Command with a latch function LT_SEL = 1 LT_REQ = 1	Switches to a latch request for the command after switching. The servo drive executes another latch request. (Internal processing) If the status "L_CMP = 1" is established before command switching, then the status is set to "L_CMP = 0" at command switching.

Note 1. Commands with a latch function: EX_FEED, EX_POSING, ZRET
Commands without a latch function: POS_SET, BRK_ON, BRK_OFF, SENS_ON, SENS_OFF, SMON, SV_ON, SV_OFF, INTERPOLATE, POSING, FEED, VELCTRL, TRQC-TRL, SVPRM_RD, SVPRM_WR
Common commands: NOP, ID_RD, CONFIG, ALM_RD, ALM_CLR, SYNC_SET, CONNECT, DISCONNECT, MEM_RD, MEM_WR

2. LT_SEL: LT_SEL1 or LT_SEL2
LT_REQ: LT_REQ1 or LT_REQ2

8.11 Servo Command I/O Signal (SVCMD_IO)

This section describes the servo command I/O signal monitoring.

8.11.1 Bit Allocation of Servo Command Output Signals

Byte 8 to byte 11 of the command format are specified as the SVCMD_IO (output) field. The servo command output signals are signals output to the slave station.
Note that the designation in this field is valid even when a CMD_ALM has occurred.

(1) SVCMD_IO (Output) Field

bit 7	bit 6	bit 5	bit 4	bit 3	bit 2	bit 1	bit 0
N_CL	P_CL	P_PPI	V_PPI	Reserved (0)			

bit 15	bit 14	bit 13	bit 12	bit 11	bit 10	bit 9	bit 8
Reserved (0)				G-SEL			

bit 23	bit 22	bit 21	bit 20	bit 19	bit 18	bit 17	bit 16
Reserved	SO3	SO2	SO1	BANK_SEL			

bit 31	bit 30	bit 29	bit 28	bit 27	bit 26	bit 25	bit 24
Reserved (0)							

(2) Details of Output Signal Bits

The following table shows the details of the output signal bits.

bit	Name	Description	Value	Setting	Enabled Timing
4	V_PPI	Speed Loop P/PI Control	0	PI control	Level
			1	P control	
	Switches the speed control from PI control to P control. Used for adjusting the settling time by suppressing overshoot during acceleration.				
5	P_PPI	Position Loop P/PI Control	0	PI control	Level
			1	P control	
	Switches the position control automatically from PI control to P control. Used for shortening the settling time by suppressing overshoot during positioning movement.				
6	P_CL	Forward Torque Limit	0	Torque not clamped	Level
			1	Torque clamped	
	Used to select whether the forward torque is clamped or not according to the forward torque limit (common parameter 8C).				
7	N_CL	Reverse Torque Limit	0	Torque not clamped	Level
			1	Torque clamped	
	Used to select whether the reverse torque is clamped or not according to the reverse torque limit (common parameter 8D).				
8 to 11	G_SEL	Gain Select	0	First gain	Level
			1	Second gain	
			2 to 15	Reserved (Do not set.)	
	Used to select the position loop gain, speed loop gain and other settings as desired according to the G_SEL value. 0: First gain 1: Second gain 2 to 15: Reserved (Do not set.)				
16 to 19	BANK_SEL	Bank Selector	0	Bank 0	Level
			1	Bank 1	
			⋮	⋮	
			F	Bank F	
	High-speed acceleration/deceleration parameter (bank switching) function				
20 to 22	SO1 to SO3	I/O Signal Output Command	0	Signal OFF	Level
			1	Signal ON	
	Turns ON/OFF the signal output for I/O signal outputs (SO1 to SO3). [Important] The OUT_SIGNAL operation is disabled when other output signals are allocated at the same time to parameters Pn50E, Pn50F and Pn510. To use OUT_SIGNAL, set all of parameters Pn50E, Pn50F and Pn510 to "0."				

8.11.2 Bit Allocation of Servo Command I/O Signal Monitoring

Byte 8 to byte 11 of the response format are specified as the SVCMD_IO (I/O signal) field. Note that the designation in this field is valid even when a CMD_ALM has occurred.

(1) SVCMD_IO (I/O Signal) Field

bit 7	bit 6	bit 5	bit 4	bit 3	bit 2	bit 1	bit 0
ESTP	EXT3	EXT2	EXT1	N-OT	P-OT	DEC	Reserved (0)

bit 15	bit 14	bit 13	bit 12	bit 11	bit 10	bit 9	bit 8
ZPOINT	PSET	NEAR	DEN	N-SOT	P-SOT	BRK_ON	Reserved (0)

bit 23	bit 22	bit 21	bit 20	bit 19	bit 18	bit 17	bit 16
Reserved (0)				ZSPD	V_CMP	V_LIM	T_LIM

bit 31	bit 30	bit 29	bit 28	bit 27	bit 26	bit 25	bit 24
IO_STS8	IO_STS7	IO_STS6	IO_STS5	IO_STS4	IO_STS3	IO_STS2	IO_STS1

(2) Details of I/O Signal Bits

The following table shows the details of the I/O signal bits.

Bit	Name	Description	Value	Setting
1	DEC	Zero Return Deceleration Limit Switch Input	0	OFF
			1	ON
	The status used to judge the state of the deceleration limit switch used for zero point return operation			
2	P_OT	Forward Drive Prohibition Input	0	OFF
			1	ON
	Overtravel (OT) is a function that forcibly stops a movable machine unit if it moves beyond its range of movement. P_OT is the status used to judge if the movable machine unit is in the forward drive prohibited state. The OT stop judgment is made based on ZSPD.			
3	N_OT	Reverse Drive Prohibition Input	0	OFF
			1	ON
	Overtravel (OT) is a function that forcibly stops a movable machine unit if it moves beyond its range of movement. N_OT is the status used to judge if the movable machine unit is in the reverse drive prohibited state. The OT stop judgment is made based on ZSPD.			
4	EXT1	External Latch 1 Input	0	OFF
			1	ON
	The status used to judge the state of the external latch 1 input signal			
5	EXT2	External Latch 2 Input	0	OFF
			1	ON
	The status used to judge the state of the external latch 2 input signal			
6	EXT3	External Latch 3 Input	0	OFF
			1	ON
	The status used to judge the state of the external latch 3 input signal			
7	ESTP (HWBB)	Emergency Stop	0	OFF
			1	ON
	When the HWBB1 or HWBB2 signal is input, the power to the motor is shut down forcibly and the motor stops according to the setting of the 1st digit of parameter Pn001.			

Bit	Name	Description	Value	Setting
9	BRK_ON	Lock Application Output	0	Lock released
			1	Lock applied
	The holding lock is used in applications where the servo driver controls the vertical axis. This is the status used to judge the state of the holding lock control signal (/BK). Note that the logic is the inverse of that of the hardware output (/BK).			
10	P_SOT	Forward Software Limit	0	Range of motion
			1	Drive prohibited due to forward software limit
	The software limit forcibly stops a movable machine unit if it moves beyond the software limit range in the same manner as the overtravel function, with or without using P_OT and N_OT (overtravel signals). This is the status used to judge if the movable machine unit is in the Forward Software Limit state (common parameter 26).			
11	N_SOT	Reverse Software Limit	0	Range of motion
			1	Drive prohibited due to reverse software limit
	The software limit forcibly stops a movable machine unit if it moves beyond the software limit range in the same manner as the overtravel function, with or without using P_OT and N_OT (overtravel signals). This is the status used to judge if the movable machine unit is in the Reverse Software Limit state (common parameter 28).			
12	DEN	Distribution Completed (Position Control Mode)	0	During distribution
			1	Distribution completed
	The status used to judge if the position reference from the servo drive has been completed This bit is valid only in the position control mode.			
13	NEAR	Near Position (Position Control Mode)	0	Outside the near-position range
			1	Within the near-position range
	The status used to judge if the current position is within the range of the NEAR Signal Width (common parameter: 67) This bit is valid only in modes other than the position control mode.			
14	PSET	Positioning Completed (Position Control Mode)	0	Outside the positioning completion range
			1	Within the positioning completion range
	The status used to judge if the current position is within the range of the Positioning Completed Width (common parameter: 66) This bit is valid only in the position control mode. Refer to *8.24 Notes when the Positioning Completed State (PSET = 1) is Established while Canceling a Motion Command*.			
15	ZPOINT	Zero Point	0	Outside the zero point position range
			1	Within the zero point position range
	The status used to judge if the current position is within the range of the Origin Detection Range (common parameter: 8B)			
16	T_LIM	Torque Limit	0	Not in the torque limited state
			1	In the torque limited state
	The status to judge if the torque is clamped at the Forward Toque Limit or the Reverse Toque Limit			
17	V_LIM	Speed Limit (Torque Control Mode)	0	Speed limit not detected
			1	Speed limit detected
	The state to judge if the speed is clamped at the limit value specified in the command or parameter This bit is valid only in the torque control mode.			

Bit	Name	Description	Value	Setting
18	V_CMP	Speed Match (Speed Control Mode)	0	Speed not matched
			1	Speed match
	The status used to judge if the speed is within the Speed Match Signal Detection Range (common parameter: 8F) This bit is valid only in the speed control mode.			
19	ZSPD	Zero Speed	0	Zero speed not detected
			1	Zero speed detected
	The status used to judge if the current speed is within the Zero Speed Detection Range (common parameter: 8E)			
24 to 31	IO_STS1 to IO_STS8	I/O Signal Monitor	0	Signal OFF
			1	Signal ON
	The status used to indicate the I/O signal state of CN1 Allocate the input signals using parameters Pn860 to Pn866, Pn868, and Pn869.			

8.12 Command Data

This section describes the servo-specific data used with servo commands.

8.12.1 Data Order

Data in commands and responses is stored in little endian byte order.
For example, 4-byte data "0x1234ABCD" in hexadecimal is stored from the least significant byte as shown below.

Byte	Data
1	CD
2	AB
3	34
4	12

8.12.2 Specifying Units

The units for the user command and parameter data can be selected.
The system of units is set in the common parameters. For the details on the common parameters, refer to *8.27 Common Parameters*.

(1) Speed

The following units can be selected.
Settings are made with common parameters 41 and 42.

Unit	Remark
Reference unit/s (default)	$\times 10^n$ [reference unit/s] can be set.
Reference unit/min	$\times 10^n$ [reference unit/min] can be set.
"%" of rated speed	$\times 10^n$ [%] can be set.
min^{-1} (rpm)	$\times 10^n$ [min^{-1}] can be set.
Max. motor speed/40000000 (Hex.)	Set "0" for common parameter 42.

(2) Position

The following units can be selected.
Settings are made with common parameters 43 and 44.

Unit	Remark
Reference unit (default)	[Reference unit] Fixed Set "0" for common parameter 44.

(3) Acceleration

The following units can be selected.
Settings are made with common parameters 45 and 46.

Unit	Remark
Reference unit/s^2 (default)	$\times 10^n$ [reference unit/s^2] can be set.

(4) Torque

The following units can be selected.
Settings are made with common parameters 47 and 48.

Unit	Remark
% of rated torque (default)	$\times 10^n$ [%] can be set.
Max. torque/40000000 (Hex.)	Set "0" for common parameter 48.

8.12.3 Specifying Monitor Data

The master station sets the selection code of the monitor data to be read from a slave station at monitor selection bits SEL_MON1 to 3 in the servo command control field (SVCMD_CTRL) and at monitor selection bits SEL_MON4 to 6 in the subcommand control field (SUB_CTRL). The slave station sets the specified monitor selection code and the monitor data in the response.

The following table lists the monitor data.

Selection Code	Monitor Name	Description	Remark
0	APOS	Feedback Position	
1	CPOS	Command Position	
2	PERR	Position Error	
3	LPOS1	Latched Position 1	
4	LPOS2	Latched Position 2	
5	FSPD	Feedback Speed	
6	CSPD	Reference Speed	
7	TRQ	Reference Torque (Force)	
8	ALARM	Detailed Information on the Current Alarm	When an alarm has occurred after the occurrence of a warning, the information on the alarm is displayed.
9	MPOS	Command Position	Input reference position in a position control loop MPOS = APOS + PERR
A	–	Reserved	
B	–	Reserved	
C	CMN1	Common Monitor 1	Selects the monitor data specified at common parameter 89.
D	CMN2	Common Monitor 2	Selects the monitor data specified at common parameter 8A.
E	OMN1	Optional Monitor 1	Selects the monitor data specified at parameter Pn824.
F	OMN2	Optional Monitor 2	Selects the monitor data specified at parameter Pn825.

8.12.4 Position Data

Servo commands use 4-byte data as position data. For infinite length operation, position data beyond this limit are expressed as shown in the diagram below.

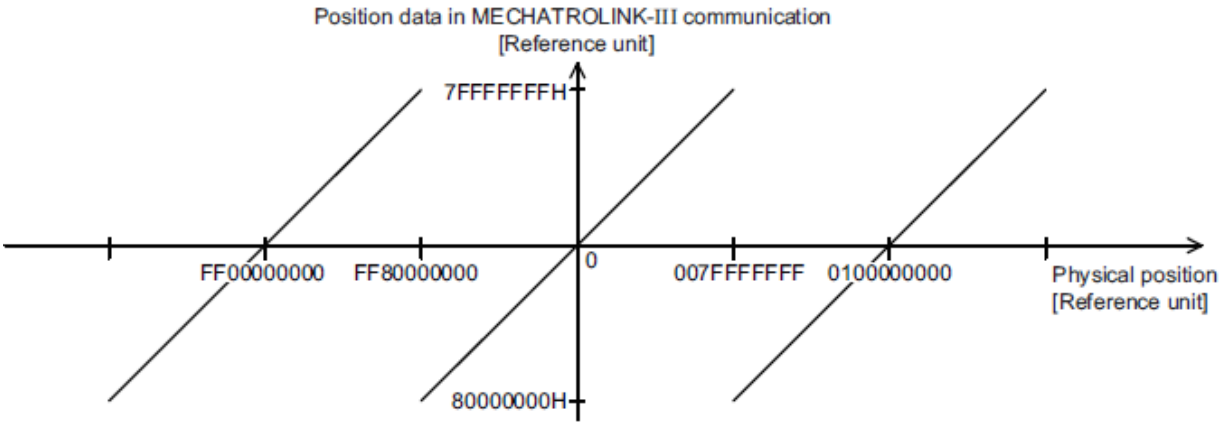

8.13 Common Commands

8.13.1 Common Commands

The table below shows the common commands.

Profile	Command Code (Hex.)	Command	Operation	Compliance*1
Common Commands	00	NOP	No operation	○
	01	PRM_RD	Read parameter	×*2
	02	PRM_WR	Write parameter	×*2
	03	ID_RD	Read ID	○
	04	CONFIG	Device setup request	Δ
	05	ALM_RD	Read alarm/warning	○
	06	ALM_CLR	Clear alarm/warning state	○
	0D	SYNC_SET	Request for establishing synchronization	○
	0E	CONNECT	Request for establishing connection	○
	0F	DISCONNECT	Request for releasing connection	○
	1B	PPRM_RD	Read retentive parameter	×*2
	1C	PPRM_WR	Write retentive parameter	×*2
	1D	MEM_RD	Read memory	Δ
	1E	MEM_WR	Write memory	Δ

*1. Indicates the compliance status.
○: Possible
Δ: Possible with specification restrictions (Refer to the subsection describing each command for the details of the restrictions.)
× : Not possible

*2. The standard servo profile does not use PRM_RD, PRM_WR, PPRM_RD and PPRM_WR, but uses SVPRM_RD and SVPRM_WR instead.

8.13.2 No Operation Command (NOP: 00H)

Data Format

Phases in which the Command can be Executed	2, 3	Command Classification	Common command	Asynchronous command
Processing Time	Within communication cycle	Subcommand	Can be used	

Byte	NOP		Description
	Command	Response	
0	00H	00H	• The NOP command is used for network control. • The current state is returned as a response. • Confirm that RCMD = NOP (= 00H) and CMD_STAT.CMDRDY = 1.
1	WDT	RWDT	
2	CMD_CTRL	CMD_STAT	
3			
4	Reserved	Reserved	
5			
6			
7			
8			
9			
10			
11			
12			
13			
14			
15			
16			
17			
18			
19			
20			
21			
22			
23			
24			
25			
26			
27			
28			
29			
30			
31			

8.13.3 Read ID Command (ID_RD: 03H)

(1) Data Format

Phases in which the Command can be Executed	2, 3	Command Classification	Common command	Asynchronous command
Processing Time	Within communication cycle	Subcommand	Can be used	

Byte	ID_RD Command	ID_RD Response	Description
0	03H	03H	• The ID_RD command reads the ID of a device. This command reads the product information as ID data. • The ID data is selected in detail by specifying ID_CODE. • Confirm the completion of the command execution by checking that RCMD = ID_RD (= 03H) and CMD_STAT.CMDRDY = 1, and also checking the setting for ID_CODE, OFFSET and SIZE. In the following cases, an alarm will occur. Do not read ID in the response in those cases because the ID value will be indefinite. • When the ID_CODE data is invalid: CMD_ALM = 9H (A.94A) • When the OFFSET data is invalid or the SIZE data do not match: CMD_ALM = 9H (A.94D) If the OFFSET or SIZE data is invalid for the specified ID_CODE, an alarm occurs. Example: Setting OFFSET = 3 and SIZE = 4 for reading the device version (4-byte data) specifies reading of data outside the device version data (4 bytes) and generates an alarm.
1	WDT	RWDT	
2	CMD_CTRL	CMD_STAT	
3			
4	ID_CODE	ID_CODE	
5	OFFSET	OFFSET	
6	SIZE	SIZE	
7			
8	Reserved	ID	
9			
10			
11			
12			
13			
14			
15			
16			
17			
18			
19			
20			
21			
22			
23			
24			
25			
26			
27			
28			
29			
30			
31			

(2) Command Parameters

ID_CODE: ID data selection code
OFFSET: ID read offset
SIZE: Read data size [bytes]

The following tables describe details of the ID_CODE.

ID_CODE	Description	Data Size	Data Type	Compliance
01H	Vendor ID Code	4 bytes	Binary Data	◦
	00000000H An ID code used to specify the vendor. Vendor ID codes are managed by the MECHATROLINK Members Association.			
02H	Device Code	4 bytes	Binary Data	◦
	02200000H (LECY series DRIVERs). This is a code specific to each device.			
03H	Device Version	4 bytes	Binary Data	◦
	Returns the firmware version of this product. Example: 00160000H Version information of device			
04H	Device Information File Version	4 bytes	Binary Data	◦
	This is the version information of the device information (MDI) file supported by this product. bit7 bit6 bit5 bit4 bit3 bit2 bit1 bit0 Revision No. bit15 bit14 bit13 bit12 bit11 bit10 bit9 bit8 Major version / Minor version Major version: When there are major changes to the MDI associated with function additions and function changes, such as addition of profiles. Minor version: When there are changes to the MDI associated with minor function additions or function changes. Revision No.: Normally returns "0." Bit 16 to 31: Reserved (0)			
05H	Extended Address Setting (for Future Use)	4 bytes	Binary Data	◦
	1 This is the number of extended addresses used. The value is always "1" because this product comprises a single axis.			
06H	Serial No.	32 bytes	ASCII Code (Delimiter: 00)	◦
	Serial number specific to each device			
10H	Profile Type 1 (Primary)	4 bytes	Binary Data	◦
	00000010H (Standard servo profile) Profile type (primary) that the device supports This product supports the following two profile types. (1) Profile type 1: Servo profile (this ID_CODE) (2) Profile type 2: MECHATROLINK-II compatible profile (12H) (3) Profile type 3: None (14H)			
11H	Profile Version 1 (Primary)	4 bytes	Binary Data	◦
	00000030H Profile version (primary) that the device supports.			
12H	Profile Type 2	4 bytes	Binary Data	◦
	00000000H (MECHATROLINK-II compatible profile)			

<table>
<tr><th>ID_CODE</th><th>Description</th><th>Data Size</th><th>Data Type</th><th>Compliance</th></tr>
<tr><td rowspan="2">13H</td><td>Profile Version 2</td><td>4 bytes</td><td>Binary Data</td><td>○</td></tr>
<tr><td colspan="4">00000021H</td></tr>
<tr><td rowspan="2">14H</td><td>Profile Type 3</td><td>4 bytes</td><td>Binary Data</td><td>○</td></tr>
<tr><td colspan="4">000000FFH (Not supported code)</td></tr>
<tr><td rowspan="2">15H</td><td>Profile Version 3</td><td>4 bytes</td><td>Binary Data</td><td>○</td></tr>
<tr><td colspan="4">00000000H</td></tr>
<tr><td rowspan="2">16H</td><td>Minimum Value of Transmission Cycle</td><td>4 bytes</td><td>Binary Data</td><td>○</td></tr>
<tr><td colspan="4">12500 [0.01 μs unit] (0.125 ms)
The minimum transmission cycle that the device can support in the granularity level of the transmission cycle increment (18H)</td></tr>
<tr><td rowspan="2">17H</td><td>Maximum Value of Transmission Cycle</td><td>4 bytes</td><td>Binary Data</td><td>○</td></tr>
<tr><td colspan="4">400000 [0.01 μs unit] (4 ms)
The maximum transmission cycle that the device can support in the granularity level of the transmission cycle increment (18H)</td></tr>
<tr><td rowspan="2">18H</td><td>Transmission Cycle Increment (Granularity)</td><td>4 bytes</td><td>Binary Data</td><td>○</td></tr>
<tr><td colspan="4">00000003H
There are the following four levels of transmission cycle increment that the device supports.
This product supports level 03H.
00H: 31.25, 62.5, 125, 250, 500 (μsec), 2 to 64 (msec) (2 msec increment)
01H: 31.25, 62.5, 125, 250, 500 (μsec), 1 to 64 (msec) (1 msec increment)
02H: 31.25, 62.5, 125, 250, 500 (μsec), 1 to 64 (msec) (0.5 msec increment)
03H: 31.25, 62.5, 125, 250, 500, 750 (μsec), 1 to 64 (msec) (0.5 msec increment)</td></tr>
<tr><td rowspan="2">19H</td><td>Minimum Value of Communication Cycle</td><td>4 bytes</td><td>Binary Data</td><td>○</td></tr>
<tr><td colspan="4">25000 [0.01 μs unit] (0.25 ms)
The minimum communication cycle that the device supports</td></tr>
<tr><td rowspan="2">1AH</td><td>Maximum Value of Communication Cycle</td><td>4 bytes</td><td>Binary Data</td><td>○</td></tr>
<tr><td colspan="4">3200000 [0.01 μs unit] (32 ms)
The maximum communication cycle that the device supports</td></tr>
<tr><td rowspan="2">1BH</td><td>Number of Transmission Bytes</td><td>4 bytes</td><td>Binary Data</td><td>○</td></tr>
<tr><td colspan="4">0000000EH
The number of transmission bytes that the device supports
The numbers of bytes to be transmitted are allocated to the following bits. (Supported: 1, Not supported: 0)
<table>
<tr><th>bit7</th><th>bit6</th><th>bit5</th><th>bit4</th><th>bit3</th><th>bit2</th><th>bit1</th><th>bit0</th></tr>
<tr><td>Reserved</td><td>Reserved</td><td>Reserved</td><td>64 bytes</td><td>48 bytes</td><td>32 bytes</td><td>16 bytes</td><td>8 bytes</td></tr>
<tr><td>0</td><td>0</td><td>0</td><td>0</td><td>1</td><td>1</td><td>1</td><td>0</td></tr>
</table>
bit 5 to 63: Reserved (0)</td></tr>
<tr><td rowspan="2">1CH</td><td>Number of Transmission Bytes (Current Setting)</td><td>4 bytes</td><td>Binary Data</td><td>○</td></tr>
<tr><td colspan="4">0000000xH
The number of transmission bytes that is currently set with DIP switch (S3). One of the bits indicated by "–" will be set to "1."
The numbers of bytes to be transmitted are allocated to the following bits.
<table>
<tr><th>bit7</th><th>bit6</th><th>bit5</th><th>bit4</th><th>bit3</th><th>bit2</th><th>bit1</th><th>bit0</th></tr>
<tr><td>Reserved</td><td>Reserved</td><td>Reserved</td><td>64 bytes</td><td>48 bytes</td><td>32 bytes</td><td>16 bytes</td><td>8 bytes</td></tr>
<tr><td>0</td><td>0</td><td>0</td><td>0</td><td>–</td><td>–</td><td>–</td><td>0</td></tr>
</table>
bit 5 to 63: Reserved (0)</td></tr>
</table>

ID_CODE	Description	Data Size	Data Type	Compliance
1DH	Profile Type (Current Selection)	4 bytes	Binary Data	◦
	This is the profile selected with the CONNECT command.			
20H	Supported Communication Mode	4 bytes	Binary Data	◦
	00000002H (Cyclic communication) The communication mode that the device supports The communication modes are allocated to the following bits. (Supported: 1, Not supported: 0) bit 1: Cyclic communication			
21H	MAC Address			
	Not supported			
30H	List of Supported Main Commands	32 bytes	Array	◦

The list of the main commands that the device supports
The commands are allocated as shown below.
bit 0 to 255: 0: Command not supported
1: Command supported

bit7	bit6	bit5	bit4	bit3	bit2	bit1	bit0
Reserved (0)	ALM_ CLR	ALM_ RD	CONFIG	ID_RD	PRM_ WR	PRM_RD	NOP
0	1	1	1	1	0	0	1

bit15	bit14	bit13	bit12	bit11	bit10	bit9	bit8
DISCON-NECT	CON-NECT	SYNC_ SET	Reserved (0)	Reserved (0)	Reserved (0)	Reserved (0)	Reserved (0)
1	1	1	0	0	0	0	0

bit 16 to 23: Reserved (0)

bit31	bit30	bit29	bit28	bit27	bit26	bit25	bit24
Reserved (0)	MEM_ WR	MEM_ RD	PPRM_ WR	PPRM_ RD	Reserved (0)	Reserved (0)	Reserved (0)
0	1	1	0	0	0	0	0

bit39	bit38	bit37	bit36	bit35	bit34	bit33	bit32
Reserved (0)	Reserved (0)	Reserved (0)	SENS_ OFF	SENS_ ON	BRK_ OFF	BRK_ON	POS_ SET
0	0	0	1	1	1	1	1

bit 40 to 47: Reserved (0)

bit55	bit54	bit53	bit52	bit51	bit50	bit49	bit48
EX_ FEED	FEED	POSING	INTER-POLATE	Reserved (0)	SV_OFF	SV_ON	SMON
1	1	1	1	0	1	1	1

bit63	bit62	bit61	bit60	bit59	bit58	bit57	bit56
Reserved (0)	Reserved (0)	TRQCTRL	VELCTRL	Reserved (0)	ZRET	EX_ POSING	Reserved (0)
0	0	1	1	0	1	1	0

bit71	bit70	bit69	bit68	bit67	bit66	bit65	bit64
Reserved (0)	Reserved (0)	Reserved (0)	Reserved (0)	Reserved (0)	Reserved (0)	SVPRM_ WR	SVPRM_ RD
0	0	0	0	0	0	1	1

bit 72 to 255: Reserved (0)

ID_CODE	Description	Data Size	Data Type	Compliance
38H	List of Supported Subcommands	32 bytes	Array	○

The list of the subcommands that the device supports
The commands are allocated as shown below.

bit 0 to 255: 0: Command not supported
1: Command supported

bit7	bit6	bit5	bit4	bit3	bit2	bit1	bit0
Reserved (0)	ALM_ CLR	ALM_ RD	Reserved (0)	Reserved (0)	PRM_ WR	PRM_RD	NOP
0	1	1	0	0	0	0	1

bit 8 to 23: Reserved (0)

bit31	bit30	bit29	bit28	bit27	bit26	bit25	bit24
Reserved (0)	MEM_ WR	MEM_ RD	PPRM_ WR	PPRM_ RD	Reserved (0)	Reserved (0)	Reserved (0)
0	1	1	0	0	0	0	0

bit 32 to 47: Reserved (0)

bit55	bit54	bit53	bit52	bit51	bit50	bit49	bit48
Reserved (0)	Reserved (0)	Reserved (0)	Reserved (0)	Reserved (0)	Reserved (0)	Reserved (0)	SMON
0	0	0	0	0	0	0	1

bit 56 to 63: Reserved (0)

bit71	bit70	bit69	bit68	bit67	bit66	bit65	bit64
Reserved (0)	Reserved (0)	Reserved (0)	Reserved (0)	Reserved (0)	Reserved (0)	SVPRM_ WR	SVPRM_ RD
0	0	0	0	0	0	1	1

bit 72 to 255: Reserved (0)

40H	List of Supported Common Parameters	32 bytes	Array	○

The list of the common parameter numbers that the device supports
The common parameters are allocated as shown below.

bit 0 to 255: 0: Common parameter not supported
1: Common parameter supported

bit7	bit6	bit5	bit4	bit3	bit2	bit1	bit0
07	06	05	04	03	02	01	Reserved (0)
1	1	1	1	1	1	1	0

bit15	bit14	bit13	bit12	bit11	bit10	bit9	bit8
Reserved (0)	Reserved (0)	Reserved (0)	0C	0B	0A	09	08
0	0	0	1	1	1	1	1

<table>
<tr><th>ID_CODE</th><th>Description</th><th>Data Size</th><th>Data Type</th><th>Compliance</th></tr>
<tr><td>40H
(Continued)</td><td colspan="4">bit 16 to 31: Reserved (0)
<table>
<tr><th>bit39</th><th>bit38</th><th>bit37</th><th>bit36</th><th>bit35</th><th>bit34</th><th>bit33</th><th>bit32</th></tr>
<tr><td>27</td><td>26</td><td>25</td><td>24</td><td>23</td><td>22</td><td>21</td><td>Reserved (0)</td></tr>
<tr><td>1</td><td>1</td><td>1</td><td>1</td><td>1</td><td>1</td><td>1</td><td>0</td></tr>
<tr><th>bit47</th><th>bit46</th><th>bit45</th><th>bit44</th><th>bit43</th><th>bit42</th><th>bit41</th><th>bit40</th></tr>
<tr><td>Reserved (0)</td><td>Reserved (0)</td><td>Reserved (0)</td><td>Reserved (0)</td><td>Reserved (0)</td><td>Reserved (0)</td><td>29</td><td>28</td></tr>
<tr><td>0</td><td>0</td><td>0</td><td>0</td><td>0</td><td>0</td><td>1</td><td>1</td></tr>
</table>
bit 48 to 63: Reserved (0)
<table>
<tr><th>bit71</th><th>bit70</th><th>bit69</th><th>bit68</th><th>bit67</th><th>bit66</th><th>bit65</th><th>bit64</th></tr>
<tr><td>47</td><td>46</td><td>45</td><td>44</td><td>43</td><td>42</td><td>41</td><td>Reserved (0)</td></tr>
<tr><td>1</td><td>1</td><td>1</td><td>1</td><td>1</td><td>1</td><td>1</td><td>0</td></tr>
<tr><th>bit79</th><th>bit78</th><th>bit77</th><th>bit76</th><th>bit75</th><th>bit74</th><th>bit73</th><th>bit72</th></tr>
<tr><td>Reserved (0)</td><td>Reserved (0)</td><td>Reserved (0)</td><td>Reserved (0)</td><td>Reserved (0)</td><td>Reserved (0)</td><td>49</td><td>48</td></tr>
<tr><td>0</td><td>0</td><td>0</td><td>0</td><td>0</td><td>0</td><td>1</td><td>1</td></tr>
</table>
bit 80 to 95: Reserved (0)
<table>
<tr><th>bit103</th><th>bit102</th><th>bit101</th><th>bit100</th><th>bit99</th><th>bit98</th><th>bit97</th><th>bit96</th></tr>
<tr><td>67</td><td>66</td><td>65</td><td>64</td><td>63</td><td>62</td><td>61</td><td>Reserved (0)</td></tr>
<tr><td>1</td><td>1</td><td>1</td><td>1</td><td>1</td><td>1</td><td>1</td><td>0</td></tr>
<tr><th>bit111</th><th>bit110</th><th>bit109</th><th>bit108</th><th>bit107</th><th>bit106</th><th>bit105</th><th>bit104</th></tr>
<tr><td>Reserved (0)</td><td>Reserved (0)</td><td>Reserved (0)</td><td>Reserved (0)</td><td>Reserved (0)</td><td>Reserved (0)</td><td>Reserved (0)</td><td>Reserved (0)</td></tr>
<tr><td>0</td><td>0</td><td>0</td><td>0</td><td>0</td><td>0</td><td>0</td><td>0</td></tr>
</table>
bit 112 to 127: Reserved (0)
<table>
<tr><th>bit135</th><th>bit134</th><th>bit133</th><th>bit132</th><th>bit131</th><th>bit130</th><th>bit129</th><th>bit128</th></tr>
<tr><td>87</td><td>86</td><td>85</td><td>84</td><td>83</td><td>82</td><td>81</td><td>Reserved (0)</td></tr>
<tr><td>1</td><td>1</td><td>1</td><td>1</td><td>1</td><td>1</td><td>1</td><td>0</td></tr>
<tr><th>bit143</th><th>bit142</th><th>bit141</th><th>bit140</th><th>bit139</th><th>bit138</th><th>bit137</th><th>bit136</th></tr>
<tr><td>8F</td><td>8E</td><td>8D</td><td>8C</td><td>8B</td><td>8A</td><td>89</td><td>88</td></tr>
<tr><td>1</td><td>1</td><td>1</td><td>1</td><td>1</td><td>1</td><td>1</td><td>1</td></tr>
<tr><th>bit151</th><th>bit150</th><th>bit149</th><th>bit148</th><th>bit147</th><th>bit146</th><th>bit145</th><th>bit144</th></tr>
<tr><td>Reserved (0)</td><td>Reserved (0)</td><td>Reserved (0)</td><td>Reserved (0)</td><td>93</td><td>92</td><td>91</td><td>90</td></tr>
<tr><td>0</td><td>0</td><td>0</td><td>0</td><td>1</td><td>1</td><td>1</td><td>1</td></tr>
</table>
bit 152 to 255: Reserved (0)</td></tr>
<tr><td rowspan="2">80H</td><td>Main Device Name</td><td>32 bytes</td><td>ASCII Code
(Delimiter: 00)</td><td>○</td></tr>
<tr><td colspan="4">Product model Example: SGDV-1R6A21A
The main device name (ASCII code)
<Notice>
To judge the device with the host device, use the device code (02H) instead of this ID_CODE.
Refer to before for the correspondence of device name and LECY's model.</td></tr>
</table>

ID_CODE	Description	Data Size	Data Type	Compliance
90H	Sub Device 1 Name	32 bytes	ASCII Code (Delimiter: 00)	○
	Motor model Example: SGMJV-01ADA21 The name of sub device 1 (ASCII code) Refer to *before* for the correspondence of device name and LECY's model.			
98H	Sub Device 1 Version	4 bytes	Binary Data	○
	Firmware version of the motor encoder Example: 00000001H The version number of sub device 1			
A0H	Sub Device 2 Name	32 bytes	ASCII Code (Delimiter: 00)	○
	External encoder model Example: The name of sub device 2 (ASCII code)			
A8H	Sub Device 2 Version	4 bytes	Binary Data	○
	The software version of the external encoder Example: 0000001H The version number of sub device 2			
B0H	Sub Device 3 Name	32 bytes	ASCII Code (Delimiter: 00)	○
	Not supported: NULL The name of sub device 3 (ASCII code)			
B8H	Sub Device 3 Version	4 bytes	Binary Data	○
	Not supported: 0000000H The version number of sub device 3			
BCH to BFH	Reserved			
C0H	Sub Device 4 Name	32 bytes	ASCII Code (Delimiter: 00)	○
	The safety option module model The name of sub device 4 (ASCII code)			
C8H	Sub Device 4 Version	4 bytes	Binary Data	○
	The software version of the safety option module Example: 00000001H The version number of sub device 4			
D0H	Sub Device 5 Name	32 bytes	ASCII Code (Delimiter: 00)	○
	The feedback option module model The name of sub device 5 (ASCII code)			
D8H	Sub Device 5 Version	4 bytes	Binary Data	○
	The software version of the feedback option module Example: 00000001H The version number of sub device 5			
E0H	Sub Device 6 Name	32 bytes	ASCII Code (Delimiter: 00)	○
	Reserved The name of sub device 6 (ASCII code)			
E8H	Sub Device 6 Version	4 bytes	Binary Data	○
	Reserved The version number of sub device 6			

Note: The ID_CODE values of C0H and above are the vendor-specific area.

8.13.4 Setup Device Command (CONFIG: 04H)

(1) Data Format

Phases in which the Command can be Executed	2, 3	Command Classification	Common command	Asynchronous command
Processing Time	Refer to the specifications of CONFIG_MOD.	Subcommand	Cannot be used	

Byte	CONFIG		Description
	Command	Response	
0	04H	04H	• The CONFIG command sets up devices. • Confirm the completion of the command execution by checking that RCMD = CONFIG (= 04H) and CMD_STAT.CMDRDY = 1, and also checking the setting for CONFIG_MOD. • CMD_STAT: Indefinite until the completion of the command In the following cases, an alarm will occur and the command will not be executed. • When the CONFIG_MOD data is invalid: CMD_ALM = 9H (A.94B) • While in the servo ON state: CMD_ALM = AH (A.95A) (In MECHATROLINK-II communications, the servo OFF state is established and the command is executed.) • While editing using SigmaWin+: CMD_ALM = AH (A.95A)
1	WDT	RWDT	
2	CMD_CTRL	CMD_STAT	
3			
4	CONFIG_MOD	CONFIG_MOD	
5	Reserved	Reserved	
6			
7			
8			
9			
10			
11			
12			
13			
14			
15			
16			
17			
18			
19			
20			
21			
22			
23			
24			
25			
26			
27			
28			
29			
30			
31			

(2) Command Parameters

CONFIG_MOD: Configuration mode
0: Parameter re-calculation and setup, processing time: 5 seconds or less
1: Not supported (CMD_ALM = 9H (A.94B))
2: Initialization to the factory-set parameter setting values, processing time: 20 seconds or less Turn the power OFF after completion of the process and turn it back ON.

(3) State of Each Status during CONFIG Command Execution

The following tables show the state of each status before, during and after CONFIG command processing.

- When Re-calculating and Setting up the Parameters

Status and Output Signal	Before CONFIG Processing	During CONFIG Processing	After CONFIG Processing
ALM	Current state	Current state	Current state
CMDRDY	1	0	1
M_RDY	Current state	Indefinite	Current state
Other Statuses	Current state	Indefinite	Current state
ALM (CN1 Output Signal)	Current state	Current state	Current state
/S-RDY (CN1 Output Signal)	Current state	OFF	Current state
Other Output Signals	Current state	Indefinite	Current state

- When Initializing to the Factory-set Parameter Settings

Status and Output Signal	Before CONFIG Processing	During CONFIG Processing	After CONFIG Processing
ALM	Current state	Current state	Current state
CMDRDY	1	0	1
M_RDY	Current state	0	0
Other Statuses	Current state	Indefinite	Current state
ALM (CN1 Output Signal)	Current state	Current state	Current state
/S-RDY (CN1 Output Signal)	Current state	OFF	OFF
Other Output Signals	Current state	Indefinite	Current state

8.13.5 Read Alarm or Warning Command (ALM_RD: 05H)

(1) Data Format

Phases in which the Command can be Executed	2, 3	Command Classification	Common command	Asynchronous command
Processing Time	Refer to the specifications of ALM_RD_MOD	Subcommand	Cannot be used	

Byte	ALM_RD Command	ALM_RD Response	Description
0	05H	05H	• The ALM_RD command reads the alarm or warning state. • The current alarm or warning state is read to ALM_DATA. • Confirm the completion of the command execution by checking that RCMD = ALM_RD (= 05H) and CMD_STAT.CMDRDY = 1, and also checking the setting for ALM_RD_MOD and ALM_INDEX. In the following cases, an alarm will occur. Do not read ALM_DATA in the response in these cases because the ALM_DATA value will be indefinite. • When the ALM_RD_MOD data is invalid: CMD_ALM = 9H (A.94B) • When the ALM_INDEX data is invalid: CMD_ALM = 9H (A.94B)
1	WDT	RWDT	
2	CMD_CTRL	CMD_STAT	
3			
4	ALM_RD_MOD	ALM_RD_MOD	
5			
6	ALM_INDEX	ALM_INDEX	
7			
8	Reserved	ALM_DATA	
9			
10			
11			
12			
13			
14			
15			
16			
17			
18			
19			
20			
21			
22			
23			
24			
25			
26			
27			
28			
29			
30			
31			

Note 1. ALM_DATA specifies an alarm using 2 bytes.
2. The alarm history arranges alarms in the order of occurrence starting from the latest alarm.
3. 0000H is set in the normal state.

(2) Command Parameters

The details of ALM_RD_MOD are described below.

ALM_RD_MOD	Description	Processing Time
0	Current alarm/warning state Max. 10 items (byte 8 to 27) (00H is set for the remaining bytes (byte 28 to 31).)	Within communication cycle
1	Alarm occurrence status history (Warnings are not retained in the history.) Max. 10 items (byte 8 to 27) (00H is set for the remaining bytes (byte 28 to 31).)	Within 60 ms

For LECY series DRIVERs, alarm codes are defined as 2-byte data with the following configuration.

	Bit 15 to 12	Bit 11 to 0
	0	Alarm code
Example: A.94B	0H	94BH

8.13.6 Clear Alarm or Warning Command (ALM_CLR: 06H)

(1) Data Format

Phases in which the Command can be Executed	2, 3	Command Classification	Common command	Asynchronous command
Processing Time	Refer to the specifications of ALM_CLR_MOD.	Subcommand	Cannot be used	

Byte	ALM_CLR		Description
	Command	Response	
0	06H	06H	• The ALM_CLR command clears the alarm or warning state. It changes the state of a slave station, but does not eliminate the cause of the alarm or warning. ALM_CLR should be used to clear the state after the cause of the alarm or warning has been eliminated. • When a communication error (reception error) or synchronous communication error (watchdog data error) occurs during synchronous communication, synchronous communication must be recovered by using the SYNC_SET command after the ALM_CLR command has been executed. • Confirm the completion of the command execution by checking that RCMD = ALM_CLR (= 06H) and CMD_STAT.CMDRDY = 1, and also checking the setting for ALM_CLR_MOD. In the following cases, an alarm will occur and the command will not be executed. • When the ALM_CLR_MOD data is invalid: CMD_ALM = 9H (A.94B) • While editing using SigmaWin+: CMD_ALM = AH (A.95A) Use this command with CMD_CTRL.ALM_CLR set to "0."
1	WDT	RWDT	
2	CMD_CTRL	CMD_STAT	
3			
4	ALM_CLR_MOD	ALM_CLR_MOD	
5			
6	Reserved	Reserved	
7			
8			
9			
10			
11			
12			
13			
14			
15			
16			
17			
18			
19			
20			
21			
22			
23			
24			
25			
26			
27			
28			
29			
30			
31			

(2) Command Parameters

The details of ALM_CLR_MOD are described below.

ALM_CLR_MOD	Description	Processing Time
0	Clearance of the current alarm or warning state	Within 200 ms
1	Clearance of the alarm history	Within 2 s

8.13.7 Start Synchronous Communication Command (SYNC_SET: 0DH)

Data Format

Phases in which the Command can be Executed	2	Command Classification	Common command	Asynchronous command
Processing Time	Communication cycle or greater, and 5 seconds or less	Subcommand	Cannot be used	

Byte	SYNC_SET Command	SYNC_SET Response	Description
0	0DH	0DH	• The SYNC_SET command starts synchronous communication. The system will be in the synchronous communication mode (phase 3) when the execution of this command is completed and watchdog data error detection starts. • It can be used to return to synchronous communication (phase 3), for example, when a shift has been made to asynchronous communication (phase 2) as a result of a communication error. Synchronous communication is established by taking the transition of the watchdog data (WDT) during the execution of this command as the reference. • Maintains this command at the master station until processing has been completed. • Confirm the completion of the command execution by checking that RCMD = SYNC_SET (= 0DH) and CMD_STAT.CMDRDY = 1. • If the system is in communication phase 2, it will establish the servo OFF state and shift to communication phase 3. • If the system is in communication phase 3, this command will be ignored and a normal response will be returned. • If 8 or a higher COMM_ALM has occurred, the system shifts to communication phase 2. In such a case, restart synchronous communication by sending this command. In the following case, an alarm will occur and the command will not be executed. • When editing using SigmaWin+: CMD_ALM = AH (A.95A)
1	WDT	RWDT	
2	CMD_CTRL	CMD_STAT	
3			
4	Reserved	Reserved	
5			
6			
7			
8			
9			
10			
11			
12			
13			
14			
15			
16			
17			
18			
19			
20			
21			
22			
23			
24			
25			
26			
27			
28			
29			
30			
31			

8.13.8 Establish Connection Command (CONNECT: 0EH)

(1) Data Format

Phases in which the Command can be Executed	1	Command Classification	Common command	Asynchronous command
Processing Time	Communication cycle or greater, and 5 seconds or less	Subcommand	Cannot be used	

Byte	CONNECT		Description
	Command	Response	
0	0EH	0EH	• The CONNECT command establishs a MECHATROLINK connection. When the execution of this command has been completed, the control of slave stations is started by means of MECHATROLINK communication. • Confirm the completion of the command execution by checking that RCMD = CONNECT (= 0EH) and CMD_STAT.CMDRDY = 1, and also that the settings of VER, COM_MODE, COM_TIME, and PROFILE_TYPE of the response agree with the set data. In the following cases, an alarm will occur and the system will remain in communication phase 1. • When the VER data is invalid: CMD_ALM = 9H (A.94B) • When the COM_TIM data is invalid: CMD_ALM = 9H (A.94B) • When the PROFILE_TYPE data is invalid: CMD_ALM = 9H (A.94B) • When the number of transmission bytes is 32 and SUBCMD = 1: CMD_ALM=9H (A.94B) • While editing using SigmaWin+: CMD_ALM = AH (A.95A)
1	WDT	RWDT	
2	CMD_CTRL	CMD_STAT	
3			
4	VER	VER	
5	COM_MOD	COM_MOD	
6	COM_TIM	COM_TIM	
7	PROFILE_TYPE	PROFILE_TYPE	
8	Reserved	Reserved	
9			
10			
11			
12			
13			
14			
15			
16			
17			
18			
19			
20			
21			
22			
23			
24			
25			
26			
27			
28			
29			
30			
31			

(2) Command Parameters

VER: MECHATROLINK application layer version
For servo profile: VER = 30H

COM_MOD: Communication mode

bit7	bit6	bit5	bit4	bit3	bit2	bit1	bit0
SUBCMD	0	0	0	DTMODE		SYNCMODE	0

- SYNCMODE: Synchronization setting
  1: Performs synchronous communication.
  (Watchdog data error detection enabled. Synchronous communication commands can be used.)
  0: Performs asynchronous communication.
  (Watchdog data error detection disabled. Synchronous communication commands cannot be used.)

- DTMODE: Data transfer method
  00: Single transmission
  01: Consecutive transmission
  10: Reserved
  11: Reserved

- SUBCMD: Subcommand setting
  0: Subcommand disabled
  1: Subcommand enabled

COM_TIM: Communication cycle setting
Sets the number by which the transmission cycle is multiplied. This result is the setting for the communi- cation cycle.
Setting range: 1 to 32 for software version 0020 or earlier
1 to 255 for software version 0021 or later The set value must satisfy the following conditions.

0.25 [ms] ≤ Transmission cycle [ms] × COM_TIME ≤ 32
[ms] Transmission cycle: for 0.125 ms, set a multiple of 2.
Example: When the transmission cycle is 0.5 [ms] and the communication cycle is 2 [ms] COM_TIME = 2/0.5 = 4

PROFILE_TYPE: Profile type setting
Sets the profile type to be used.
PROFILE_TYPE = 10H (Standard servo profile)

8.13.9 Disconnection Command (DISCONNECT: 0FH)

Data Format

Phases in which the Command can be Executed	All phases	Command Classification	Common command	Asynchronous command
Processing Time	Communication cycle or greater, and 5 seconds or less	Subcommand	Cannot be used	

Byte	DISCONNECT		Description
	Command	Response	
0	0FH	0FH	• When releasing a connection, the master station transmits the DISCONNECT command for two or more communication cycles. At this time, the slave station interrupts current processing and then performs the initialization required to reestablish the connection. It then waits for the connect establishment request from the master station. • The DISCONNECT command can be sent regardless of the state of the CMD_STAT.CMDRDY bit. If the DISCONNECT command is sent when the CMD_STAT.CMDRDY state bit is 0, processing is interrupted and this command is processed. • Control with the command sending time of the master station as two or more communication cycles. • Upon receipt of this command, the following operation is performed. - Shifts the communication phase to phase 1. - Establishes the servo OFF state. - Disables reference point setting. - Initializes the position data. • When the control power is turned OFF at the same time the DISCONNECT command is sent, the response data is indefinite.
1	Reserved	Reserved	
2			
3			
4			
5			
6			
7			
8			
9			
10			
11			
12			
13			
14			
15			
16			
17			
18			
19			
20			
21			
22			
23			
24			
25			
26			
27			
28			
29			
30			
31			

8.13.10 Read Memory Command (MEM_RD: 1DH)

(1) Data Format

Phases in which the Command can be Executed	2, 3	Command Classification	Common command	Asynchronous command
Processing Time	Within 200 ms	Subcommand	Cannot be used	

Byte	MEM_RD Command	MEM_RD Response	Description
0	1DH	1DH	• The MEM_RD command reads the data stored in virtual memory by specifying the initial address and the data size for reading. • Confirm the completion of the command execution by checking that RCMD = MEM_RD (= 1DH) and CMD_STAT.CMDRDY = 1, and also checking the setting for ADDRESS, SIZE and MODE/DATA_TYPE. In the following cases, an alarm will occur. Do not read DATA in the response in these cases because the DATA value will be indefinite. • When the ADDRESS data is invalid: CMD_ALM = 9H (A.94A) • When the MODE/DATA_TYPE data is invalid: CMD_ALM = 9H (A.94B) • When the SIZE data is invalid: CMD_ALM = 9H (A.94D) • While editing using SigmaWin+: CMD_ALM = AH (A.95A) For details, refer to *8.13.11 - Method to Access Virtual Memory Areas*.
1	WDT	RWDT	
2	CMD_CTRL	CMD_STAT	
3			
4	Reserved	Reserved	
5	MODE/ DATA_TYPE	MODE/ DATA_TYPE	
6	SIZE	SIZE	
7			
8	ADDRESS	ADDRESS	
9			
10			
11			
12	Reserved	DATA	
13			
14			
15			
16			
17			
18			
19			
20			
21			
22			
23			
24			
25			
26			
27			
28			
29			
30			
31			

(2) Command Parameters

The details of MODE/DATA_TYPE are described below.

bit7	bit6	bit5	bit4	bit3	bit2	bit1	bit0
MODE				DATA_TYPE			

MODE = 1: Volatile memory, 2: Not supported
DATA_TYPE = 1: Byte, 2: Short, 3: Long, 4: Not supported

SIZE: Data size for reading (of type specified by DATA_TYPE)
ADDRESS: Initial address for reading
DATA: Read data

8.13.11 Write Memory Command (MEM_WR: 1EH)

(1) Data Format

Phases in which the Command can be Executed	2, 3	Command Classification	Common command	Asynchronous command
Processing Time	Refer to *- Executing the Adjustment Operation.*	Subcommand	Cannot be used	

Byte	MEM_WR Command	MEM_WR Response	Description
0	1EH	1EH	• The MEM_WR command writes the data in virtual memory by specifying the initial address, the data size and the data for writing. • This command provides an adjustment function equivalent to that of the ADJ command of the MECHATROLINK-II compatible profile. • Confirm the completion of the command execution by checking that RCMD = MEM_WR (= 1EH) and CMD_STAT.CMDRDY = 1, and also checking the setting for ADDRESS, SIZE, MODE/DATA_TYPE and DATA. In the following cases, an alarm will occur and the command will not be executed. • When the ADDRESS data is invalid: CMD_ALM = 9H (A.94A) • When the MODE/DATA_TYPE data is invalid: CMD_ALM = 9H (A.94B) • When the SIZE data is invalid: CMD_ALM = 9H (A.94D) • When the DATA data is invalid: CMD_ALM = 9H (A.94B) • When the conditions for executing the adjustment operation in the next page are not satisfied: CMD_ALM=AH (A.95A) • While editing using SigmaWin+: CMD_ALM = AH (A.95A) For details, refer to *- Method to Access Virtual Memory Areas.*
1	WDT	RWDT	
2	CMD_CTRL	CMD_STAT	
3			
4	Reserved	Reserved	
5	MODE/ DATA_TYPE	MODE/ DATA_TYPE	
6	SIZE	SIZE	
7			
8	ADDRESS	ADDRESS	
9			
10			
11			
12	DATA	DATA	
13			
14			
15			
16			
17			
18			
19			
20			
21			
22			
23			
24			
25			
26			
27			
28			
29			
30			
31			

(2) Command Parameters

The details of MODE/DATA_TYPE are described below.

bit7	bit6	bit5	bit4	bit3	bit2	bit1	bit0
MODE				DATA_TYPE			

MODE = 1: Volatile memory, 2: Non-volatile memory (Non-volatile memory can be selected only for common parameters)
DATA_TYPE = 1: Byte, 2: Short, 3: Long, 4: Not supported

SIZE: Data size for writing (type specified by DATA_TYPE)
ADDRESS: Initial address for writing
DATA: Data to be written

- Executing the Adjustment Operation

The table below lists the adjustment operations that can be executed.

Adjustment	Request Code	Preparation before Execution	Processing Time	Execution Conditions
Normal mode	0000H	None	200 ms max.	–
Parameter initialization	1005H	None	20 s max.	Initialization impossible while the servo is ON. After initialization, the power supply must be turned OFF and then ON again.
Absolute encoder reset	1008H	Required	5 s max.	When using an incremental encoder, impossible to reset the encoder while the servo is ON. After execution, the power supply must be turned OFF and then ON again.
Automatic offset adjustment of motor current detection signals	100EH	None	5 s max.	Adjustment is disabled: • While the main circuit power supply is OFF • While the servo is ON • While the servomotor is running
Multiturn limit setting	1013H	Required	5 s max.	When using an incremental encoder, the setting is disabled unless A.CC0 (Multiturn limit dis agreement) occurs. After execution, the power supply must be turned OFF and then ON again.

- Details of Command for Adjustment

1. Send the following data and set the request code of the adjustment to be executed.
   Command = MEM_WR
   ADDRESS = 80004000H
   MODE/DATA_TYPE = 12H
   SIZE = 0001H
   DATA = Request code of the adjustment to be executed
   To confirm the completion of the execution, check that CMDRDY = 1. If an error occurs, carry out the operation in step 4 to abort execution.
2. For adjustment that requires a preparation process in the table, send the following data.
   Command = MEM_WR
   ADDRESS = 80004002H
   MODE/DATA_TYPE = 12H
   SIZE = 0001H
   DATA = 0002H
   To confirm the completion of the execution, check that CMDRDY = 1. If an error occurs, carry out the operation in step 4 to abort execution.

3. Send the following data to execute adjustment.

   Command = MEM_WR
   ADDRESS = 80004002H
   MODE/DATA_TYPE = 12H
   SIZE = 0001H
   DATA = 0001H

   To confirm the completion of the execution, check that CMDRDY = 1. If an error occurs, carry out the operation in step 4 to abort execution.

4. Send the following data to abort the execution.

   Command = MEM_WR
   ADDRESS = 80004000H
   MODE/DATA_TYPE = 12H
   SIZE = 0001H
   DATA = 0000H

   To confirm the completion of the execution, check that CMDRDY = 1.

- Method to Access Virtual Memory Areas

For the information on the allocation of virtual memory areas, refer to *8.29 Virtual Memory Space*. The details of the units (DATA_TYPE) for accessing the virtual memory areas are described below.

Area Name	Details	DATA_TYPE	SIZE*	Accessible/inaccessible
Vendor-specific area	Reserved			Inaccessible
	Register area	Short, long	Number of data	Accessible
Reserved	Reserved			Inaccessible
Common parameter area	Common parameters	Long	Number of data	Accessible
ID area	Reserved	Byte, short, long	Number of data	Accessible
	ID			

∗ Set the number of data of the data type specified by DATA_TYPE.

The details of CMD_ALM of the MEM_RD/MEM_WR command are described below.

CMD_ALM	Displayed Code	Error Details
9H	A.94A	When an initial address outside the defined areas is specified
		When an address within the reserved ranges of common parameter or vendor-specific areas is specified
		When a value other than a multiple of the data size specified in DATA_TYPE is set for ADDRESS
	A.94B	When the MODE or DATA_TYPE data is invalid
	A.94D	When the initial address is within the defined areas but the specified size goes beyond those areas
		When a data size beyond the specification of the command format is set for SIZE

8.14 Servo Commands

8.14.1 Table of Servo Commands

The following table shows the servo commands.

Profile	Command Code (Hex.)	Command	Operation	Compliance*
Standard Servo	20	POS_SET	Set coordinates	○
	21	BRK_ON	Request for applying lock	○
	22	BRK_OFF	Release lock	○
	23	SENS_ON	Request for turning sensor ON	○
	24	SENS_OFF	Request for turning sensor OFF	○
	30	SMON	Monitor servo status	○
	31	SV_ON	Servo ON	○
	32	SV_OFF	Servo OFF	○
	34	INTERPOLATE	Interpolation	○
	35	POSING	Positioning	○
	36	FEED	Constant speed feed	○
	37	EX_FEED	Positioning at constant speed by external input	○
	39	EX_POSING	Positioning by external input	○
	3A	ZRET	Zero point return	○
	3C	VELCTRL	Velocity control	○
	3D	TRQCTRL	Torque (force) control	○
	40	SVPRM_RD	Read servo parameter	Δ
	41	SVPRM_WR	Write servo parameter	○

∗ Indicates the compliance status.
○ : Possible
Δ : Possible with specification restrictions (Refer to the subsection describing each command for the details of the restrictions.)
× : Not possible

8.14.2 Set Coordinates Command (POS_SET: 20H)

(1) Data Format

Phases in which the Command can be Executed	2, 3	Command Classification	Common motion command	Asynchronous command
Processing Time	Within communication cycle	Subcommand	Cannot be used	

Byte	POS_SET Command	POS_SET Response	Description
0	20H	20H	• The POS_SET command sets the coordinate system for the slave station. Specify the type of coordinates with the monitor selection code using POS_SEL. • This command also provides a function to set the reference point. Specifying this command after setting REFE = 1 sets the machine zero point according to the coordinate setting values and enables the stroke check (software limit) function. • Confirm the completion of the command execution by checking that RCMD = POS_SET (= 20H) and CMD_STAT.CMDRDY = 1, and also checking the setting for POS_SEL and POS_DATA. In the following case, an alarm will occur and the command will not be executed. • When the POS_SET_MOD data is invalid: CMD_ALM = 9H (A.94B)
1	WDT	RWDT	
2	CMD_CTRL	CMD_STAT	
3			
4	SVCMD_CTRL	SVCMD_STAT	
5			
6			
7			
8	SVCMD_IO	SVCMD_IO	
9			
10			
11			
12	POS_SET_MOD	POS_SET_MOD	
13			
14			
15			
16	POS_DATA	POS_DATA	
17			
18			
19			
20	Reserved	MONITOR1	
21			
22			
23			
24		MONITOR2	
25			
26			
27			
28		MONITOR3	
29			
30			
31			

(2) Command Parameters

POS_SET_MOD: Coordinates Setting Mode

bit7	bit6	bit5	bit4	bit3	bit2	bit1	bit0
REFE	0	0	0	POS_SEL			

bit15	bit14	bit13	bit12	bit11	bit10	bit9	bit8
Reserved							

bit23	bit22	bit21	bit20	bit19	bit18	bit17	bit16
Reserved							

bit31	bit30	bit29	bit28	bit27	bit26	bit25	bit24
Reserved							

- POS_SEL: Select coordinates system (specify using the monitor selection code).
  When APOS (feedback position of the machine coordinates system) = 0 is selected, the command/ machine coordinates system is set at POS_DATA.

- REFE: Enable/Disable setting of reference point
  0: Disables setting of a reference point.
  1: Enables setting of a reference point. The coordinate reference point setting is confirmed and the ZPOINT (zero point position) and software limit become effective.

- POS_DATA: Coordinates set value
- Set the reserved bits to "0."

8.14.3 Apply Lock Command (BRK_ON: 21H)

Data Format

Phases in which the Command can be Executed	2, 3	Command Classification	Servo standard command	Asynchronous command
Processing Time	Within communication cycle	Subcommand	Cannot be used	

Byte	BRK_ON		Description
	Command	Response	
0	21H	21H	• The BRK_ON command outputs a lock operation signal. • Confirm the completion of the command execution by checking that RCMD = BRK_ON (= 21H) and CMD_STAT.CMDRDY = 1. • Valid only in the servo OFF state. • This command is enabled when Pn50F.2 is set to a value other than "0" (allocation of /BK).
1	WDT	RWDT	
2	CMD_CTRL	CMD_STAT	
3			
4	SVCMD_CTRL	SVCMD_STAT	
5			
6			
7			
8	SVCMD_IO	SVCMD_IO	
9			
10			
11			
12	Reserved	CPRM_SEL_MON1	
13			
14			
15			
16		CPRM_SEL_MON2	
17			
18			
19			
20		MONITOR1	
21			
22			
23			
24		MONITOR2	
25			
26			
27			
28		MONITOR3	
29			
30			
31			

8.14.4 Release Lock Command (BRK_OFF: 22H)

Data Format

Phases in which the Command can be Executed	2, 3	Command Classification	Servo standard command	Asynchronous command
Processing Time	Within communication cycle	Subcommand	Cannot be used	

Byte	BRK_OFF		Description
	Command	Response	
0	22H	22H	• The BRK_OFF command releases the lock. • Confirm the completion of the command execution by checking that RCMD = BRK_OFF (= 22H) and CMD_STAT.CMDRDY = 1. • This command is enabled when Pn50F.2 is set to a value other than "0" (allocation of /BK).
1	WDT	RWDT	
2	CMD_CTRL	CMD_STAT	
3			
4	SVCMD_CTRL	SVCMD_STAT	
5			
6			
7			
8	SVCMD_IO	SVCMD_IO	
9			
10			
11			
12	Reserved	CPRM_SEL_MON1	
13			
14			
15			
16		CPRM_SEL_MON2	
17			
18			
19			
20		MONITOR1	
21			
22			
23			
24		MONITOR2	
25			
26			
27			
28		MONITOR3	
29			
30			
31			

- Lock signal Output Timing

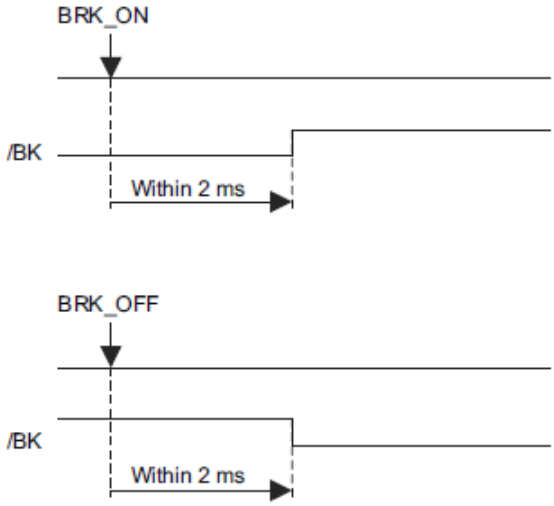

IMPORTANT

- Normally, lock signals are controlled by the DRIVER parameters.
- BRK_ON and BRK_OFF commands are always valid as command as long as no warning occurs.
- Always make sure of the status of lock control command when using BRK_ON or BRK_OFF command.

Sending BRK_OFF command while the servomotor is being powered (servo ON) will not change the operation status. However, it is very dangerous to send SV_OFF command in the above status since the lock is kept released.

8.14.5 Turn Sensor ON Command (SENS_ON: 23H)

Data Format

Phases in which the Command can be Executed	2, 3	Command Classification	Common command	Asynchronous command
Processing Time	Within 2 s	Subcommand	Cannot be used	

Byte	SENS_ON Command	SENS_ON Response	Description
0	23H	23H	• The SENS_ON command is the sensor information initialization request command. It initializes the sensor. • Confirm the completion of the command execution by checking that RCMD = SENS_ON (= 23H) and CMD_STAT.CMDRDY = 1. • CPRM_SEL_MON1/CPRM_SEL_MON2: Monitor data can be selected by changing the common parameter setting. For details, refer to *8.27 Common Parameters*. • When an absolute encoder is used, the initial position is acquired from the encoder. The current position is taken to be: acquired encoder position + zero point position offset (common parameter 23). The coordinate reference point setting is confirmed and the ZPOINT (zero point position) and software limit become effective.
1	WDT	RWDT	
2	CMD_CTRL	CMD_STAT	
3			
4	SVCMD_CTRL	SVCMD_STAT	
5			
6			
7			
8	SVCMD_IO	SVCMD_IO	
9			
10			
11			
12	Reserved	CPRM_SEL_MON1	
13			
14			
15			
16		CPRM_SEL_MON2	
17			
18			
19			
20		MONITOR1	
21			
22			
23			
24		MONITOR2	
25			
26			
27			
28		MONITOR3	
29			
30			
31			

8.14.6 Turn Sensor OFF Command (SENS_OFF: 24H)

Data Format

Phases in which the Command can be Executed	2, 3	Command Classification	Common command	Asynchronous command
Processing Time	Within 2 s	Subcommand	Cannot be used	

Byte	SENS_OFF Command	SENS_OFF Response	Description
0	24H	24H	• The SENS_OFF command is the sensor power OFF request command. It is used to turn OFF the power to the sensor. • Confirm the completion of the command execution by checking that RCMD = SENS_OFF (= 24H) and CMD_STAT.CMDRDY = 1. • CPRM_SEL_MON1/CPRM_SEL_MON2: Monitor data can be selected by changing the common parameter setting. For details, refer to *8.27 Common Parameters*. • When an absolute encoder is used the position data is indefinite. "0" is set for POS_RDY. The coordinate reference point setting becomes invalid and the ZPOINT (zero point position) and software limit also become invalid. In the following case, an alarm will occur and the command will not be executed. • In the servo ON state: CMD_ALM = AH (A.95A)
1	WDT	RWDT	
2	CMD_CTRL	CMD_STAT	
3			
4	SVCMD_CTRL	SVCMD_STAT	
5			
6			
7			
8	SVCMD_IO	SVCMD_IO	
9			
10			
11			
12	Reserved	CPRM_SEL_MON1	
13			
14			
15			
16		CPRM_SEL_MON2	
17			
18			
19			
20		MONITOR1	
21			
22			
23			
24		MONITOR2	
25			
26			
27			
28		MONITOR3	
29			
30			
31			

8.14.7 Servo Status Monitor Command (SMON: 30H)

Data Format

Phases in which the Command can be Executed	2, 3	Command Classification	Servo standard command	Asynchronous command
Processing Time	Within communication cycle	Subcommand	Can be used	

Byte	SMON Command	SMON Response	Description
0	30H	30H	• The SMON command reads the alarms, status, and monitor information (position, speed, output, torque, etc.) specified in monitor setting, and the state of the I/O signals of the servo drive. • Confirm the completion of the command execution by checking that RCMD = SMON (= 30H) and CMD_STAT.CMDRDY = 1. • CPRM_SEL_MON1/CPRM_SEL_MON2: Monitor data can be selected by changing the common parameter setting. For details, refer to *8.27 Common Parameters*.
1	WDT	RWDT	
2	CMD_CTRL	CMD_STAT	
3			
4	SVCMD_CTRL	SVCMD_STAT	
5			
6			
7			
8	SVCMD_IO	SVCMD_IO	
9			
10			
11			
12	Reserved	CPRM_SEL_MON1	
13			
14			
15			
16		CPRM_SEL_MON2	
17			
18			
19			
20		MONITOR1	
21			
22			
23			
24		MONITOR2	
25			
26			
27			
28		MONITOR3	
29			
30			
31			

8.14.8 Servo ON Command (SV_ON: 31H)

Data Format

Phases in which the Command can be Executed	2, 3	Command Classification	Servo standard command	Asynchronous command
Processing Time	Normally 50 ms (10 s max.)	Subcommand	Can be used	

Byte	SV_ON Command	SV_ON Response	Description
0	31H	31H	• The SV_ON command supplies the power to the servomotor and makes it ready for operation. • Confirm the completion of the command execution by checking that RCMD = SV_ON (= 31H) and CMD_STAT.CMDRDY = 1. • CPRM_SEL_MON1/CPRM_SEL_MON2: Monitor data can be selected by changing the common parameter setting. For details, refer to *8.27 Common Parameters*. • To establish the servo ON state after a warning has occurred, send a command other than SV_ON, such as the SV_OFF command, and then send the SV_ON command. • Upon completion of execution of this command, the reference position (CPOS) must be read, and the PC or PLC...etc. coordinate system must be set up. • Confirm that M_RDY = 1 before sending this command. In the following cases, AH (A.95A) will be set for CMD_ALM and the command will not be executed. • When an alarm (COM_ALM = 8H or greater, or D_ALM = 1) has occurred • When PON = 0 • When the execution of the SENS_ON command has not completed with an absolute encoder used • When ESTP (HWBB signal off) = 1 • When parameters have been initialized
1	WDT	RWDT	
2	CMD_CTRL	CMD_STAT	
3			
4	SVCMD_CTRL	SVCMD_STAT	
5			
6			
7			
8	SVCMD_IO	SVCMD_IO	
9			
10			
11			
12	Reserved	CPRM_SEL_MON1	
13			
14			
15			
16		CPRM_SEL_MON2	
17			
18			
19			
20		MONITOR1	
21			
22			
23			
24		MONITOR2	
25			
26			
27			
28		MONITOR3	
29			
30			
31			

8.14.9 Servo OFF Command (SV_OFF: 32H)

Data Format

Phases in which the Command can be Executed	2, 3	Command Classification	Servo standard command	Asynchronous command
Processing Time	Time set with Pn506 500 ms max.	Subcommand	Can be used	

Byte	SV_OFF		Description
	Command	Response	
0	32H	32H	• The SV_OFF command shuts the power to the servomotor. • Confirm the completion of the command execution by checking that RCMD = SV_OFF (= 32H) and CMD_STAT.CMDRDY = 1. • CPRM_SEL_MON1/CPRM_SEL_MON2: Monitor data can be selected by changing the common parameter setting. For details, refer to *8.27 Common Parameters*. • When Pn829 (SVOFF waiting time at deceleration to a stop) is set to a value other than "0", the servo will be turned OFF after the servomotor decelerates to a stop according to the deceleration constant for stopping set by the parameter. (The servomotor decelerates to a stop in position control mode.) • When Pn829 (SVOFF waiting time at deceleration to a stop) is set to "0", the servo will be turned OFF immediately after reception of this command (default setting). (The control mode before receiving the SV_OFF command remains unchanged.) • Executing the SV_OFF command will cancel the speed reference, speed feedforward, torque feedforward, and torque limits set by a position/speed control command.
1	WDT	RWDT	
2	CMD_CTRL	CMD_STAT	
3			
4	SVCMD_CTRL	SVCMD_STAT	
5			
6			
7			
8	SVCMD_IO	SVCMD_IO	
9			
10			
11			
12	Reserved	CPRM_SEL_MON1	
13			
14			
15			
16		CPRM_SEL_MON2	
17			
18			
19			
20		MONITOR1	
21			
22			
23			
24		MONITOR2	
25			
26			
27			
28		MONITOR3	
29			
30			
31			

- Related Parameters

Parameter No.	Description
Pn829	SVOFF waiting time at deceleration to a stop
Pn827 (Pn840)	Linear deceleration constant for stopping

Parameter numbers in parentheses are those when Pn833 = 1.

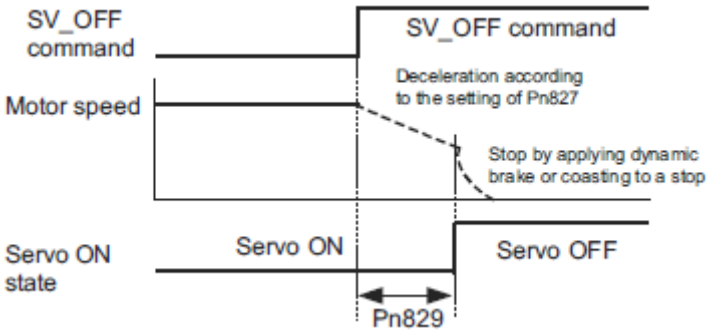

8.14.10 Interpolation Command (INTERPOLATE: 34H)

Data Format

Phases in which the Command can be Executed	3	Command Classification	Servo standard command	Synchronous command
Processing Time	Within communication cycle	Subcommand	Can be used	

Byte	INTERPOLATE Command	INTERPOLATE Response	Description
0	34H	34H	• The INTERPOLATE command performs interpolation feeding by specifying the interpolation positions every communication cycle set in the CONNECT command. • Confirm the completion of the command execution by checking that RCMD = INTERPOLATE (= 34H) and CMD_STAT.CMDRDY = 1. • Confirm motion reference output completion by checking that SVCMD_IO.DEN = 1, and the completion of positioning by checking that SVCMD_IO.PSET = 1. • CPRM_SEL_MON1/CPRM_SEL_MON2: Monitor data can be selected by changing the common parameter setting. For details, refer to *8.27 Common Parameters*. <Notes on using the command> • TPOS (target position): Set the target position with a signed value. • VFF (velocity feedforward): Set the speed feedforward value with a signed value. Use it as a speed feedforward function. • TFF (torque feedforward): Set the torque feedforward value with a signed value. Use it as a torque (force) feedforward function. • TLIM (torque limit): Set the torque limit with an unsigned value. • For the information on the settings of the above reference data, refer to *8.14.20 Motion Command Data Setting Method*. • For the units of command values set in the command area, refer to *8.12.2 Specifying Units*. In the following cases, an alarm will occur and the command will not be executed. • When used in communication phase 2: CMD_ALM = CH (A.97A) • In the servo OFF state: CMD_ALM = AH (A.95A) • When the difference relative to the previous TPOS exceeds the limit value: CMD_ALM = 9H (A.94B) In the following cases, an alarm will occur and the relevant value will be clamped at the limit value. • When the VFF data is invalid: CMD_ALM = 1H (A.94B) • When the TFF data is invalid: CMD_ALM = 1H (A.94B)
1	WDT	RWDT	
2	CMD_CTRL	CMD_STAT	
3			
4	SVCMD_CTRL	SVCMD_STAT	
5			
6			
7			
8	SVCMD_IO	SVCMD_IO	
9			
10			
11			
12	TPOS	CPRM_SEL_ MON1	
13			
14			
15			
16	VFF	CPRM_SEL_ MON2	
17			
18			
19			
20	TFF	MONITOR1	
21			
22			
23			
24	Reserved	MONITOR2	
25			
26			
27			
28	TLIM	MONITOR3	
29			
30			
31			

8.14.11 Positioning Command (POSING: 35H)

Data Format

Phases in which the Command can be Executed	2, 3	Command Classification	Servo standard command	Asynchronous command
Processing Time	Within communication cycle	Subcommand	Can be used	

Byte	POSING		Description
	Command	Response	
0	35H	35H	• The POSING command executes positioning to the specified position. • Positioning is executed to the target position (P1) at the positioning speed. • Confirm the completion of the command execution by checking that RCMD = POSING (= 35H) and CMD_STAT.CMDRDY = 1. • Confirm motion reference output completion by checking that SVCMD_IO.DEN = 1, and the completion of positioning by checking that SVCMD_IO.PSET = 1. • Confirm the completion of the cancellation of the command by checking that RCMD = POSING (= 35H), CMD_STAT.CMDRDY = 1 and SVCMD_STAT.CMD_CANCEL_CMP = 1. • Confirm the completion of pausing of the command by checking that RCMD = POSING (= 35H), CMD_STAT.CMDRDY = 1 and SVCMD_STAT.CMD_PAUSE_CMP = 1. • CPRM_SEL_MON1/CPRM_SEL_MON2: Monitor data can be selected by changing the common parameter setting. For details, refer to *8.27 Common Parameters*. <Notes on using the command> • TPOS (target position): Set the target position with a signed value. • TSPD (target speed): Set the target speed with an unsigned value. • ACCR (acceleration): Set the acceleration with an unsigned value. • DECR (deceleration): Set the deceleration with an unsigned value. When both ACCR and DECR are "0", acceleration/deceleration is performed according to the parameter settings. To perform two-step acceleration/deceleration, set both ACCR and DECR to "0." For details, refer to *8.25.2 Positioning Command*. • TLIM (torque limit): Set the torque limit with an unsigned value. When not applying the torque limit, set the maximum value. • For the information on the settings of the above reference data, refer to *8.14.20 Motion Command Data Setting Method*. • For the units of command values set in the command area, refer to *8.12.2 Specifying Units*. In the following cases, an alarm will occur and the command will not be executed. • In the servo OFF state: CMD_ALM = AH (A.95A) • When the TSPD data is invalid: CMD_ALM = 9H (A.94B) • When the ACCR or DECR data is invalid: CMD_ALM = 9H (A.94B) • When either of the ACCR or DECR data is set to "0": CMD_ALM = 9H (A.94B) In the following case, an alarm will occur and the relevant value will be clamped at the limit value. • When the TLIM data is invalid: CMD_ALM = 1H (A.94B)
1	WDT	RWDT	
2	CMD_CTRL	CMD_STAT	
3			
4	SVCMD_CTRL	SVCMD_STAT	
5			
6			
7			
8	SVCMD_IO	SVCMD_IO	
9			
10			
11			
12	TPOS	CPRM_SEL_MON1	
13			
14			
15			
16	TSPD	CPRM_SEL_MON2	
17			
18			
19			
20	ACCR	MONITOR1	
21			
22			
23			
24	DECR	MONITOR2	
25			
26			
27			
28	TLIM	MONITOR3	
29			
30			
31			

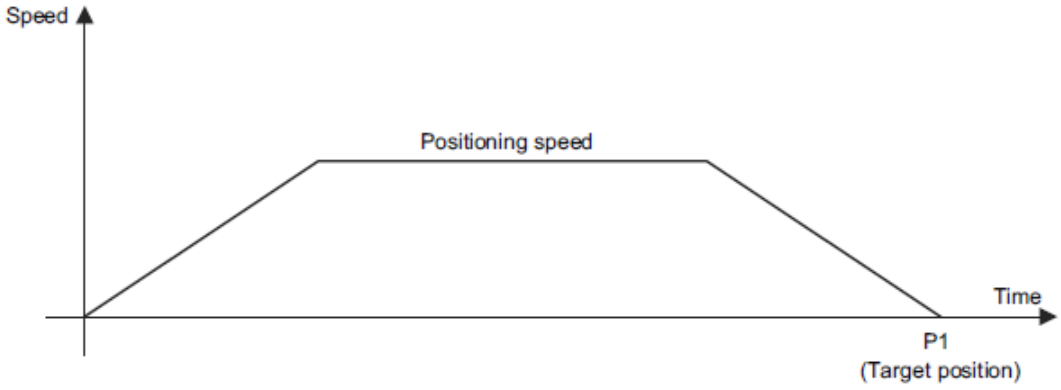
Speed
Positioning speed
Time
P1
(Target position)

8.14.12 Feed Command (FEED: 36H)

Data Format

Phases in which the Command can be Executed	2, 3	Command Classification	Servo standard command	Asynchronous command
Processing Time	Within communication cycle	Subcommand	Can be used	

Byte	FEED Command	FEED Response	Description
0	36H	36H	• The FEED command performs constant speed feed control at the specified feed speed. • To change the speed and direction of feed, change the feed speed setting. • To cancel constant speed feed, set SVCMD_CTRL.CMD_CANCEL to "1." • To pause constant speed feed, set SVCMD_CTRL.CMD_PAUSE to "1." • Confirm the completion of the cancellation of the command by checking that RCMD = FEED (= 36H), CMD_STAT.CMDRDY = 1 and SVCMD_STAT.CMD_CANCEL_CMP = 1. Confirm motion reference output completion by checking that SVCMD_IO.DEN = 1, and the completion of positioning by checking that SVCMD_IO.PSET = 1. • Confirm the completion of pausing of the command by checking that RCMD = FEED (= 36H), CMD_STAT.CMDRDY = 1 and SVCMD_STAT.CMD_PAUSE_CMP = 1. • CPRM_SEL_MON1/CPRM_SEL_MON2: Monitor data can be selected by changing the common parameter setting. For details, refer to *8.27 Common Parameters*. <Notes on using the command> • TSPD (target speed): Set the target speed with a signed value. • ACCR (acceleration): Set the acceleration with an unsigned value. • DECR (deceleration): Set the deceleration with an unsigned value. • When both ACCR and DECR are "0", acceleration/deceleration is performed according to the parameter settings. To perform two-step acceleration/deceleration, set both ACCR and DECR to "0." For details, refer to *8.25.2 Positioning Command*. • TLIM (torque limit): Set the torque limit with an unsigned value. • For the information on the settings of the above reference data, refer to *8.14.20 Motion Command Data Setting Method*. • For the units of command values set in the command area, refer to *8.12.2 Specifying Units*. In the following cases, an alarm will occur and the command will not be executed. • In the servo OFF state: CMD_ALM = AH (A.95A) • When the TSPD data is invalid: CMD_ALM = 9H (A.94B) • When the ACCR or DECR data is invalid: CMD_ALM = 9H (A.94B) • When either of the ACCR or DECR data is set to "0": CMD_ALM = 9H (A.94B) In the following case, an alarm will occur and the relevant value will be clamped at the limit value. • When the TLIM data is invalid: CMD_ALM = 1H (A.94B)
1	WDT	RWDT	
2	CMD_CTRL	CMD_STAT	
3			
4	SVCMD_CTRL	SVCMD_STAT	
5			
6			
7			
8	SVCMD_IO	SVCMD_IO	
9			
10			
11			
12	Reserved	CPRM_SEL_MON1	
13			
14			
15			
16	TSPD	CPRM_SEL_MON2	
17			
18			
19			
20	ACCR	MONITOR1	
21			
22			
23			
24	DECR	MONITOR2	
25			
26			
27			
28	TLIM	MONITOR3	
29			
30			
31			

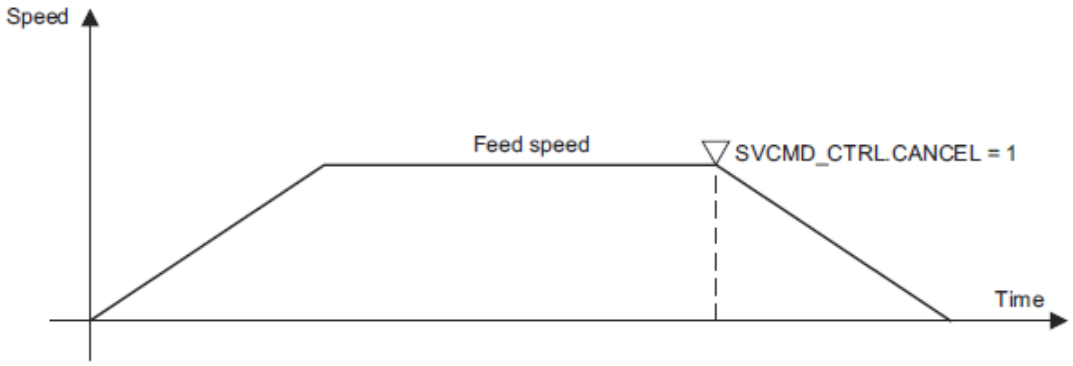
Speed
Feed speed
SVCMD_CTRL.CANCEL = 1
Time

8.14.13 External Input Feed Command (EX_FEED: 37H)

(1) Data Format

Phases in which the Command can be Executed	2, 3	Command Classification	Servo standard command	Asynchronous command
Processing Time	Within communication cycle	Subcommand	Can be used	

Byte	EX_FEED Command	EX_FEED Response	Description
0	37H	37H	• The EX_FEED command performs positioning in response to the input of the external positioning signal during constant speed feed at the specified feed speed. • To change the speed and direction of feed, change the feed speed setting. • To pause external input feed, set SVCMD_CTRL.CMD_PAUSE to "1." • Confirm the completion of the command execution by checking that RCMD = EX_FEED (= 37H) and CMD_STAT.CMDRDY = 1. • To cancel the constant speed feed, set SVCMD_CTRL.CMD_CANCEL to "1." • Confirm the completion of latching by the latch signal by checking that SVCMD_CTRL.L_CMP1 = 1. • Confirm motion reference output completion by checking that SVCMD_CTRL.DEN = 1, and the completion of positioning by checking that SVCMD_CTRL.PSET = 1. • Confirm the completion of the cancellation of the command by checking that RCMD = EX_FEED (= 37H), CMD_STAT.CMDRDY = 1 and SVCMD_STAT.CMD_CANCEL_CMP = 1. • Confirm the completion of pausing of the command by checking that RCMD = EX_FEED (= 37H), CMD_STAT.CMDRDY = 1 and SVCMD_STAT.CMD_PAUSE_CMP = 1. • CPRM_SEL_MON1/CPRM_SEL_MON2: Monitor data can be selected by changing the common parameter setting. For details, refer to *8.27 Common Parameters*. <Notes on using the command> • To send this command, select the latch signal with LT_SEL1 of SVCMD_CTRL and output the latch request by setting LT_REQ1 = 1. • TSPD (target speed): Set the target speed with a signed value. • ACCR (acceleration): Set the acceleration with an unsigned value. • DECR (deceleration): Set the deceleration with an unsigned value. • When both ACCR and DECR are "0", acceleration/deceleration is performed according to the parameter settings. To perform two-step acceleration/deceleration, set both ACCR and DECR to "0." For details, refer to *8.25.2 Positioning Command*. • TLIM (torque limit): Set the torque limit with an unsigned value. • For the information on the settings of the above reference data, refer to *8.14.20 Motion Command Data Setting Method*. • For the units of command values set in the command area, refer to *8.12.2 Specifying Units*. In the following cases, an alarm will occur and the command will not be executed. • In the servo OFF state: CMD_ALM = AH (A.95A) • When the TSPD data is invalid: CMD_ALM = 9H (A.94B) • When the ACCR or DECR data is invalid: CMD_ALM = 9H (A.94B) In the following case, an alarm will occur and the relevant value will be clamped at the limit value. • When the TLIM data is invalid: CMD_ALM = 1H (A.94B)
1	WDT	RWDT	
2	CMD_CTRL	CMD_STAT	
3			
4	SVCMD_CTRL	SVCMD_STAT	
5			
6			
7			
8	SVCMD_IO	SVCMD_IO	
9			
10			
11			
12	Reserved	CPRM_SEL_MON1	
13			
14			
15			
16	TSPD	CPRM_SEL_MON2	
17			
18			
19			
20	ACCR	MONITOR1	
21			
22			
23			
24	DECR	MONITOR2	
25			
26			
27			
28	TLIM	MONITOR3	
29			
30			
31			

(2) Operating Sequence

The following describes the operating sequence for external input positioning operation using the EX_FEED command.

1. The master station sends the EX_FEED command. It selects the latch signal with LT_SEL1 of SVCMD_CTRL and outputs the latch request by setting LT_REQ1 = 1.
2. The slave station starts feeding at the specified speed when it receives the EX_FEED command. At the same time, it enters the external signal positioning mode.
3. When the external positioning signal is input, the slave station sets latch completion status L_CMP1 to "1" to notify the master station that current position latching by the external positioning signal is completed.
4. The slave station calculates "(External input positioning target P3) = (Position P2 latched by the external positioning signal) + (Travel distance for external input positioning (common parameter 83))" and performs positioning to external input positioning target P3.
5. After the completion of motion reference output to move the device to target position P3, the slave station sets the motion reference output completed flag (DEN) to "1" to notify the master station of the completion of motion reference output to move the device to target position P3.

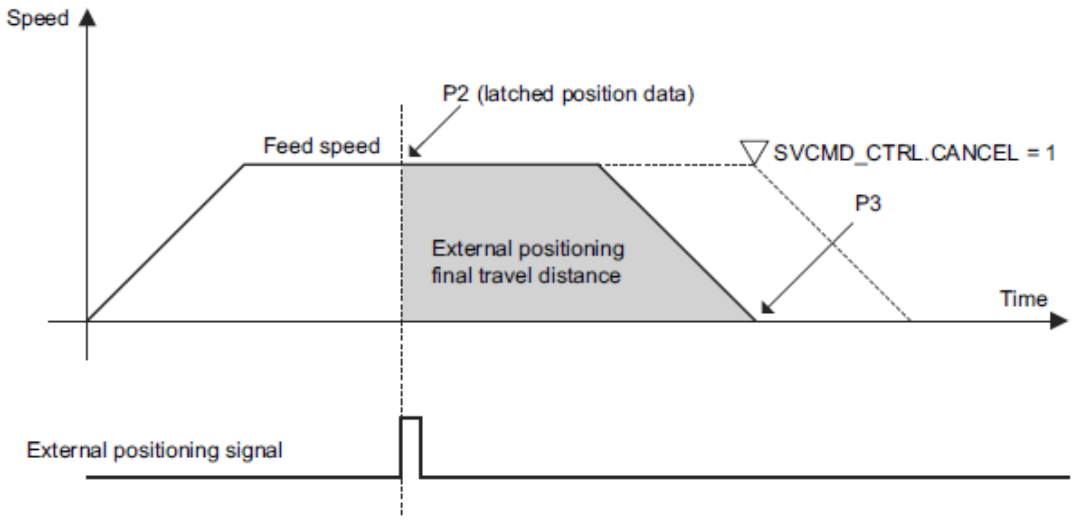

Note:

- To cancel the external input feed, set SVCMD_CTRL.CMD_CANCEL to "1."
- The motion direction after latching is determined by the sign of the value set for the external positioning final travel distance.

If the final travel distance for external positioning is a positive value:

- After latching during motion in the positive direction, the motor rotates in the positive direction (the same direction) for positioning.
- After latching during motion in the negative direction, the motor rotates in the positive direction (the reverse direction) for positioning.

If the final travel distance for external positioning is a negative value:

- After latching during motion in the positive direction, the motor rotates in the negative direction (the reverse direction) for positioning.
- After latching during motion in the negative direction, the motor rotates in the negative direction (the same direction) for positioning.

8.14.14 External Input Positioning Command (EX_POSING: 39H)

(1) Data Format

Phases in which the Command can be Executed	2, 3	Command Classification	Servo standard command	Asynchronous command
Processing Time	Within communication cycle	Subcommand	Can be used	

Byte	EX_POSING Command	EX_POSING Response	Description
0	39H	39H	• The EX_POSING command performs positioning in response to the input of the external positioning signal. • To pause the external input positioning, set SVCMD_CTRL.CMD_PAUSE to "1." • Confirm the completion of the command execution by checking that RCMD = EX_POSING (= 39H) and CMD_STAT.CMDRDY = 1. • Confirm the completion of latching by the latch signal by checking that SVCMD_CTRL.L_CMP1 = 1. • Confirm motion reference output completion by checking that SVCMD_CTRL.DEN = 1, and the completion of positioning by checking that SVCMD_CTRL.PSET = 1. • Confirm the completion of the cancellation of the command by checking that RCMD = EX_POSING (= 39H), CMD_STAT.CMDRDY = 1 and SVCMD_STAT.CMD_CANCEL_CMP = 1. • Confirm the completion of pausing of the command by checking that RCMD = EX_POSING (= 39H), CMD_STAT.CMDRDY = 1 and SVCMD_STAT.CMD_PAUSE_CMP = 1. • CPRM_SEL_MON1/CPRM_SEL_MON2: Monitor data can be selected by changing the common parameter setting. For details, refer to *8.27 Common Parameters*. <Notes on using the command> • To send this command, select the latch signal with LT_SEL1 of SVCMD_CTRL and output the latch request by setting LT_REQ1 = 1. • TPOS (target position): Set the target position with a signed value. • TSPD (target speed): Set the target speed with an unsigned value. • ACCR (acceleration): Set the acceleration with an unsigned value. • DECR (deceleration): Set the deceleration with an unsigned value. • When both ACCR and DECR are "0", acceleration/deceleration is performed according to the parameter settings. To perform two-step acceleration/deceleration, set both ACCR and DECR to "0." For details, refer to *8.25.2 Positioning Command*. • TLIM (torque limit): Set the torque limit with an unsigned value. • For the information on the settings of the above reference data, refer to *8.14.20 Motion Command Data Setting Method*. • For the units of command values set in the command area, refer to *8.12.2 Specifying Units*. In the following cases, an alarm will occur and the command will not be executed. • In the servo OFF state: CMD_ALM = AH (A.95A) • When the TSPD data is invalid: CMD_ALM = 9H (A.94B) • When the ACCR or DECR data is invalid: CMD_ALM = 9H (A.94B) In the following case, an alarm will occur and the relevant value will be clamped at the limit value.
1	WDT	RWDT	
2	CMD_CTRL	CMD_STAT	
3			
4	SVCMD_CTRL	SVCMD_STAT	
5			
6			
7			
8	SVCMD_IO	SVCMD_IO	
9			
10			
11			
12	TPOS	CPRM_SEL_MON1	
13			
14			
15			
16	TSPD	CPRM_SEL_MON2	
17			
18			
19			
20	ACCR	MONITOR1	
21			
22			
23			
24	DECR	MONITOR2	
25			
26			
27			
28	TLIM	MONITOR3	
29			
30			
31			

(2) Operating Sequence

The following describes the operating sequence for external input positioning operation using the EX_POSING command.

1. The master station sends the EX_POSING command. Target position P1 is set in the "target position" field to be used as the positioning target if the external signal is not input. It selects the latch signal with LT_SEL1 of SVCMD_CTRL and outputs the latch request by setting LT_REQ1 = 1.
2. The slave station starts feeding toward the positioning target position P1 at the specified speed when it receives the EX_POSING command. At the same time, it enters the external input positioning mode.
3. When the external positioning signal is input, the slave station sets latch completion status L_CMP1 to "1" to notify the master station that current position latching by the external positioning signal is completed.
4. The slave station calculates "(External input positioning target P3) = (Position P2 latched by the external positioning signal) + (Travel distance for external input positioning (common parameter 83))" and performs positioning to external input positioning target P3.
5. After the completion of motion reference output to move the device to target position P3, the slave station sets the motion reference output completed flag (DEN) to "1" to notify the master station of the completion of motion reference output to move the device to target position P3.

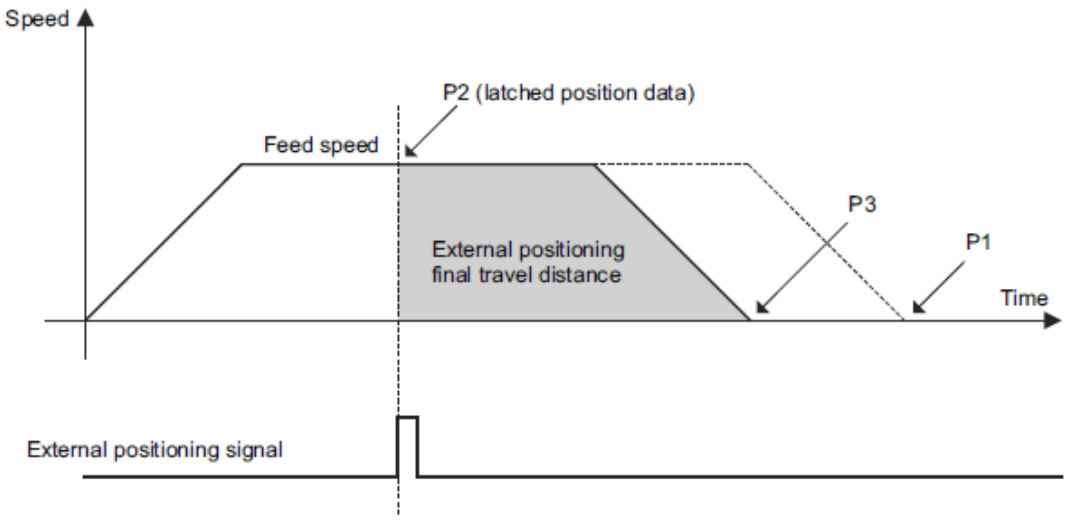

Note:

- To cancel the external input positioning, set SVCMD_CTRL.CMD_CANCEL to "1."
- The motion direction after latching is determined by the sign of the value set for the external positioning final travel distance.

If the final travel distance for external positioning is a positive value:

- After latching during motion in the positive direction, the motor rotates in the positive direction (the same direction) for positioning.
- After latching during motion in the negative direction, the motor rotates in the positive direction (the reverse direction) for positioning.

If the final travel distance for external positioning is a negative value:

- After latching during motion in the positive direction, the motor rotates in the negative direction (the reverse direction) for positioning.
- After latching during motion in the negative direction, the motor rotates in the negative direction (the same direction) for positioning.

8.14.15 Zero Point Return Command (ZRET: 3AH)

(1) Data Format

Phases in which the Command can be Executed	2, 3	Command Classification	Servo standard command	Asynchronous command
Processing Time	Within communication cycle	Subcommand	Can be used	

Byte	ZRET Command	ZRET Response	Description
0	3AH	3AH	• The ZRET command specifies the type of zero point return operation and performs the operation using the zero point limit switch and the position latch signal. • The signal used to latch the position is specified by "latch signal selection." • To pause the zero point return operation, set SVCMD_CTRL.CMD_PAUSE to "1." • Confirm the completion of the command execution by checking that RCMD = ZRET (= 3AH) and CMD_STAT.CMDRDY= 1. • Confirm the completion of motion reference output by checking that SVCMD_IO.DEN = 1, and the completion of positioning at the zero point by checking that SVCMD_IO.ZPOINT (zero point position) = 1 and SVCMD_IO.PSET = 1. • Confirm the completion of the cancellation of the command by checking that RCMD = ZRET (= 3AH), CMD_STAT.CMDRDY = 1 and SVCMD_STAT.CMD_CANCEL_CMP = 1. • Confirm the completion of pausing of the command by checking that RCMD = ZRET (= 3AH), CMD_STAT.CMDRDY = 1 and SVCMD_STAT.CMD_PAUSE_CMP = 1. • CPRM_SEL_MON1/CPRM_SEL_MON2: Monitor data can be selected by changing the common parameter setting. For details, refer to *8.27 Common Parameters*. <Notes on using the command> • To send this command, select the latch signal with LT_SEL1 of SVCMD_CTRL and output the latch request by setting LT_REQ1 = 1. • TSPD (target speed): Set the target speed with an unsigned value. • ACCR (acceleration): Set the acceleration with an unsigned value. • DECR (deceleration): Set the deceleration with an unsigned value. • When both ACCR and DECR are "0", acceleration/deceleration is performed according to the parameter settings. To perform two-step acceleration/deceleration, set both ACCR and DECR to "0." For details, refer to *8.25.2 Positioning Command*. • TLIM (torque limit): Set the torque limit with an unsigned value. • For the information on the settings of the above reference data, refer to *8.14.20 Motion Command Data Setting Method*. • For the units of command values set in the command area, refer to *8.12.2 Specifying Units*. In the following cases, an alarm will occur and the command will not be executed. • In the servo OFF state: CMD_ALM = AH (A.95A) • When the TSPD data is invalid: CMD_ALM = 9H (A.94B) • When the ACCR or DECR data is invalid: CMD_ALM = 9H (A.94B) In the following case, an alarm will occur and the relevant value will be clamped at the limit value. • When the TLIM data is invalid: CMD_ALM = 1H (A.94B)
1	WDT	RWDT	
2	CMD_CTRL	CMD_STAT	
3			
4	SVCMD_CTRL	SVCMD_STAT	
5			
6			
7			
8	SVCMD_IO	SVCMD_IO	
9			
10			
11			
12	MODE	CPRM_SEL_ MON1	
13			
14			
15			
16	TSPD	CPRM_SEL_ MON2	
17			
18			
19			
20	ACCR	MONITOR1	
21			
22			
23			
24	DECR	MONITOR2	
25			
26			
27			
28	TLIM	MONITOR3	
29			
30			
31			

(2) Command-specific Data

The following describes the data specific to the ZRET command.

MODE (Lower 1 byte)

bit7	bit6	bit5	bit4	bit3	bit2	bit1	bit0
HOME_DIR	Reserved	Reserved	Reserved	TYPE			

- MODE.HOME_DIR (Zero point return direction)
  Selects the zero point return direction.
  MODE.HOME_DIR = 0: Positive direction
  MODE.HOME_DIR = 1: Negative direction

- MODE.TYPE (Zero point return type)
  Sets the zero point return type on selection of the type from the patterns below.
  MODE.TYPE = 0: Latch signal
  MODE.TYPE = 1: Deceleration limit switch + Latch signal

(3) Operating Sequence

The following describes the zero point return operating sequence for each of the zero point return modes.

1. MODE = 0 (Latch Signal)
   (1) The master station sends the ZRET command. It selects the latch signal with LT_SEL1 of SVCMD_CTRL and outputs the latch request by setting LT_REQ1 = 1.
   (2) The slave station starts feeding in the direction specified by MODE.HOME_DIR at the speed set for the Homing Approach Speed (common parameter 84).
   (3) When the current position latch signal, specified by LT_SEL1 of SVCMD_CTRL, is input, the slave station executes positioning through the movement of the Final Travel Distance for Homing (common parameter 86) at the Homing Creep Speed (common parameter 85). After the completion of positioning, the slave station sets the zero point of the reference coordinate system.

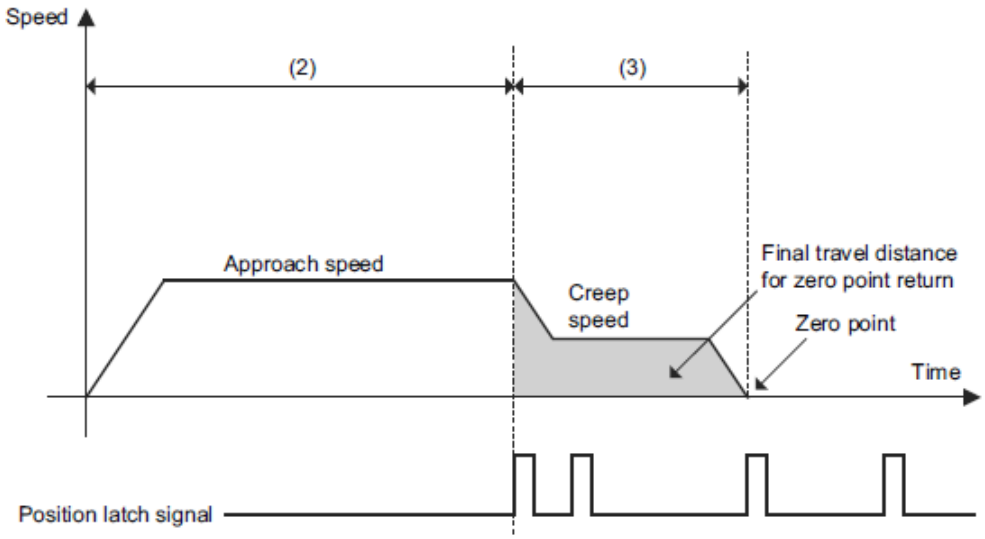

2. MODE = 1 (Deceleration Limit Switch Signal + Latch Signal)
   (1) The master station sends the ZRET command. It selects the latch signal with LT_SEL1 of SVCMD_CTRL and outputs the latch request by setting LT_REQ1 = 1.
   (2) The slave station starts feeding in the direction specified by MODE.HOME_DIR at the speed set in the "TSPD" field.
   (3) When the "deceleration limit switch" is closed (DEC = 1), the feed speed is switched to the Homing Approach Speed (common parameter 84).
   (4) When the current position latch signal, specified by LT_SEL1 of SVCMD_CTRL, is input after the "deceleration limit switch" is opened (DEC = 0), the slave station executes positioning through the movement of the Final Travel Distance for Homing (common parameter 86) at the Homing Creep Speed (common parameter 85). After the completion of positioning, the slave station sets the zero point of the reference coordinate system.

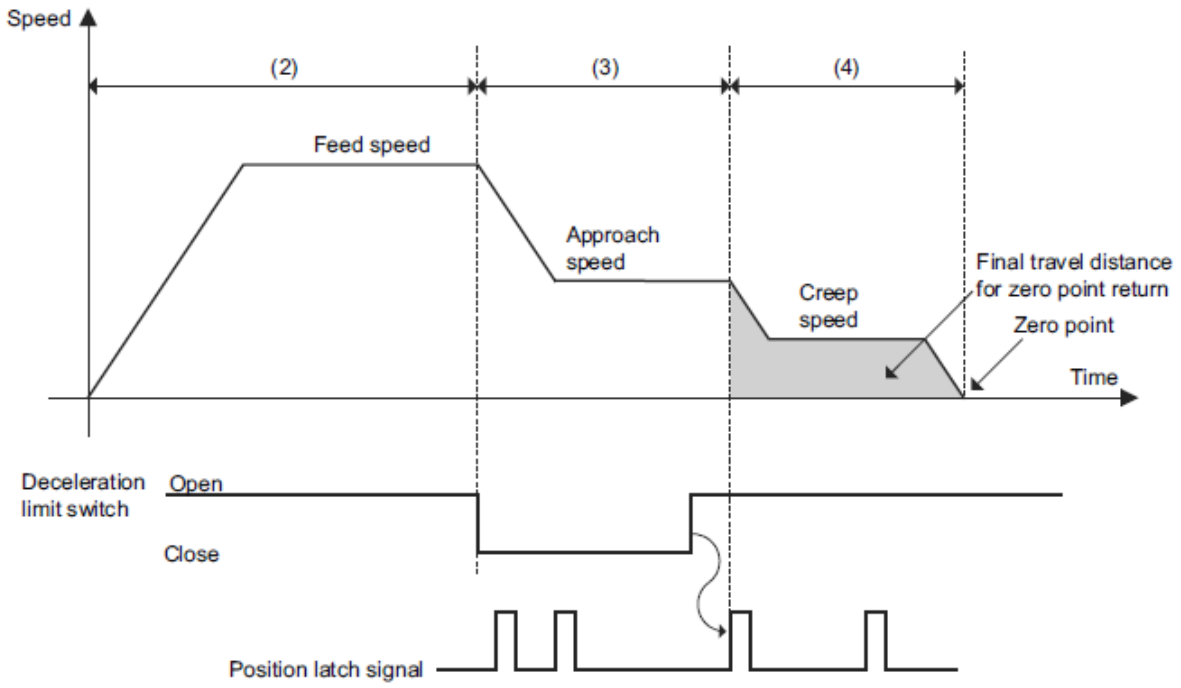

Note:

The motion direction after latching is determined by the sign of the value set for the Final Travel Distance for Homing.

If the Final Travel Distance for Homing is a positive value:
- After latching during motion in the positive direction, the motor rotates in the positive direction (the same direction) for positioning.
- After latching during motion in the negative direction, the motor rotates in the positive direction (the reverse direction) for positioning. (With ZRET in the MECHATROLINK-II compatible profile, the motor rotates in the negative direction (the same direction) for positioning.)

If the Final Travel Distance for Homing is a negative value:
- After latching during motion in the positive direction, the motor rotates in the negative direction (the reverse direction) for positioning.
- After latching during motion in the negative direction, the motor rotates in the negative direction (the same direction) for positioning. (With ZRET in the MECHATROLINK-II compatible profile, the motor rotates in the positive direction (the reverse direction) for positioning.)

8.14.16 Velocity Control Command (VELCTRL: 3CH)

Data Format

Phases in which the Command can be Executed	2, 3	Command Classification	Servo standard command	Asynchronous command
Processing Time	Within communication cycle	Subcommand	Can be used	

Byte	VELCTRL Command	VELCTRL Response	Description
0	3CH	3CH	• The VELCTRL command sends the speed reference to a slave station to perform speed control. The slave station performs speed control directly without position control. • To cancel the speed control, set the speed reference as VREF = 0 or set SVCMD_CTRL.CMD_CANCEL to "1." • To pause the speed control, set SVCMD_CTRL.CMD_PAUSE to "1." • Confirm the completion of the command execution by checking that RCMD = VELCTRL (= 3CH) and CMD_STAT.CMDRDY = 1. • To cancel the speed control, set the speed reference as VREF = 0 or set SVCMD_CTRL.CMD_CANCEL to "1." • Confirm the arrival of the feedback speed at the speed reference (VREF) by checking that SVCMD_IO.V_CMP = 1. • Confirm the completion of pausing of the command by checking that RCMD = VELCTRL (= 3CH), CMD_STAT.CMDRDY = 1 and SVCMD_STAT.CMD_PAUSE_CMP = 1. • CPRM_SEL_MON1/CPRM_SEL_MON2: Monitor data can be selected by changing the common parameter setting. For details, refer to *8.27 Common Parameters*. <Notes on using the command> • VREF (Velocity reference): Set the speed reference with a signed value. • TFF (torque feedforward): Set the torque feedforward value with a signed value. Use it as a torque (force) feedforward function. • ACCR (acceleration): Set the acceleration with an unsigned value. • DECR (deceleration): Set the deceleration with an unsigned value. • TLIM (torque limit): Set the torque limit with an unsigned value. • For the information on the settings of the above reference data, refer to *3.2.20 Motion Command Data Setting Method.* • For the units of command values set in the command area, refer to *8.12.2 Specifying Units*. • If the command is sent in the servo OFF state (SVON = 0), the command becomes effective next time the servo ON state (SVON = 1) is established. In the following case, an alarm will occur and the command will not be executed. • When the ACCR or DECR data is invalid: CMD_ALM = 9H (A.94B) In the following cases, an alarm will occur and the relevant value will be clamped at the limit value. • When the VREF data is invalid: CMD_ALM = 1H (A.94B) • When the TLIM data is invalid: CMD_ALM = 1H (A.94B)
1	WDT	RWDT	
2	CMD_CTRL	CMD_STAT	
3			
4	SVCMD_CTRL	SVCMD_STAT	
5			
6			
7			
8	SVCMD_IO	SVCMD_IO	
9			
10			
11			
12	TFF	CPRM_SEL_ MON1	
13			
14			
15			
16	VREF	CPRM_SEL_ MON2	
17			
18			
19			
20	ACCR	MONITOR1	
21			
22			
23			
24	DECR	MONITOR2	
25			
26			
27			
28	TLIM	MONITOR3	
29			
30			
31			

8.14.17 Torque (Force) Control Command (TRQCTRL: 3DH)

Data Format

Phases in which the Command can be Executed	2, 3	Command Classification	Servo standard command	Asynchronous command
Processing Time	Within communication cycle	Subcommand	Can be used	

Byte	TRQCTRL Command	TRQCTRL Response	Description
0	3DH	3DH	• The TRQCTRL command sends the torque (force) reference to a slave station to performs torque (force) control. The slave station performs torque control directly without speed control and position control. • Confirm the completion of the command execution by checking that RCMD = TRQCTRL (= 3DH) and CMD_STAT.CMDRDY = 1. • CPRM_SEL_MON1/CPRM_SEL_MON2: Monitor data can be selected by changing the common parameter setting. For details, refer to *8.27 Common Parameters*. <Notes on using the command> • TQREF (Torque reference): Set the torque reference with a signed value. • VLIM (Velocity limit): Set the speed limit with an unsigned value. • For the information on the settings of the above reference data, refer to *8.14.20 Motion Command Data Setting Method*. • For the units of command values set in the command area, refer to *8.12.2 Specifying Units*. • If the command is sent in the servo OFF state (SVON = 0), the command becomes effective next time the servo ON state (SVON = 1) is established. In the following cases, an alarm will occur and the relevant value will be clamped at the limit value. • When the TQREF data is invalid: CMD_ALM = 1H (A.94B) • When the VLIM data is invalid: CMD_ALM = 1H (A.94B)
1	WDT	RWDT	
2	CMD_CTRL	CMD_STAT	
3			
4	SVCMD_CTRL	SVCMD_STAT	
5			
6			
7			
8	SVCMD_IO	SVCMD_IO	
9			
10			
11			
12	VLIM	CPRM_SEL_MON1	
13			
14			
15			
16	TQREF	CPRM_SEL_MON2	
17			
18			
19			
20	Reserved	MONITOR1	
21			
22			
23			
24		MONITOR2	
25			
26			
27			
28		MONITOR3	
29			
30			
31			

8.14.18 Read Servo Parameter Command (SVPRM_RD: 40H)

(1) Data Format

Phases in which the Command can be Executed	2, 3	Command Classification	Servo standard command	Asynchronous command
Processing Time	Within 200 ms	Subcommand	Cannot be used	

Byte	SVPRM_RD Command	SVPRM_RD Response	Description
0	40H	40H	• The SVPRM_RD command reads the servo parameters on specification of the servo parameter number, data size, and the read mode. • Select the parameter type (common parameter or device parameter) in the read mode to read the corresponding servo parameter. • Confirm the completion of the command execution by checking that RCMD = SVPRM_RD (= 40H) and CMD_STAT.CMDRDY = 1, and also checking the setting for NO, SIZE and MODE. In the following cases, an alarm will occur. Do not read PARAMETER in the response in these cases because the PARAMETER value will be indefinite. • When the NO data is invalid: CMD_ALM = 9H (A.94A) • When the SIZE data is invalid: CMD_ALM = 9H (A.94D) • When the MODE data is invalid: CMD_ALM = 9H (A.94B) • While editing using SigmaWin+: CMD_ALM = AH (A.95A)
1	WDT	RWDT	
2	CMD_CTRL	CMD_STAT	
3			
4	SVCMD_CTRL	SVCMD_STAT	
5			
6			
7			
8	SVCMD_IO	SVCMD_IO	
9			
10			
11			
12	NO	NO	
13			
14	SIZE	SIZE	
15	MODE	MODE	
16	Reserved	PARAMETER	
17			
18			
19			
20			
21			
22			
23			
24			
25			
26			
27			
28			
29			
30			
31			

(2) Command Parameters

NO: Servo parameter number

SIZE: Servo parameter data size [byte]

MODE: Servo parameter read mode

Servo Parameter Type	Reading Source	Mode Setting
Common Parameters	RAM area	00H
Device Parameter	RAM area	10H

PARAMETER: Servo parameter data

8.14.19 Write Servo Parameter Command (SVPRM_WR: 41H)

(1) Data Format

Phases in which the Command can be Executed	2, 3	Command Classification	Servo standard command	Asynchronous command
Processing Time	Within 200 ms	Subcommand	Cannot be used	

Byte	SVPRM_WR Command	SVPRM_WR Response	Description
0	41H	41H	• The SVPRM_WR command writes the servo parameters on specification of the servo parameter number, data size, and write mode. • Select the parameter type (common parameter or device parameter) and the writing destination (RAM area or retentive memory area) in the write mode to write the corresponding servo parameter. • When specifying offline parameters, the CONFIG command must be sent to set up after the parameters are written. • Confirm the completion of the command execution by checking that RCMD = SVPRM_WR (= 41H) and CMD_STAT.CMDRDY = 1, and also checking the setting for NO, SIZE, MODE and PARAMETER. In the following cases, an alarm will occur and the command will not be executed. • When the NO data is invalid: CMD_ALM = 9H (A.94A) • When the SIZE data is invalid: CMD_ALM = 9H (A.94D) • When the MODE data is invalid: CMD_ALM = 9H (A.94B) • When the PARAMETER data is invalid: CMD_ALM = 9H (A.94B) • While editing using SigmaWin+: CMD_ALM = AH (A.95A)
1	WDT	RWDT	
2	CMD_CTRL	CMD_STAT	
3			
4	SVCMD_CTRL	SVCMD_STAT	
5			
6			
7			
8	SVCMD_IO	SVCMD_IO	
9			
10			
11			
12	NO	NO	
13			
14	SIZE	SIZE	
15	MODE	MODE	
16	PARAMETER	PARAMETER	
17			
18			
19			
20			
21			
22			
23			
24			
25			
26			
27			
28			
29			
30			
31			

(2) Command Parameters

NO: Servo parameter number

SIZE: Servo parameter data size [byte]

MODE: Servo parameter write mode

Servo Parameter Type	Writing Destination	Mode Setting
Common Parameters	RAM area	00H
	Retentive memory area	01H
Device Parameter	RAM area	10H
	Retentive memory area	11H

PARAMETER: Servo parameter data

8.14.20 Motion Command Data Setting Method

This subsection provides information on the settings of the following data fields of the motion commands: TSPD, VREF, VFF, TREF, TFF, TLIM, VLIM, ACCR and DECR.

Name	Description	Setting	CMD_ALM Warning Code	Operation for the Setting
TSPD	Target speed	FEED, EX_FEED: Set signed 4-byte data.		
		–Maximum commandable speed*1 to + Maximum commandable speed	0H Normal	Operates according to the setting.
		Other than above	9H A.94B	Ignores the command and continues the previous command.
		POSING, EX_POSING, ZRET: Set unsigned 4-byte data.		
		0 to Maximum commandable speed and also TSPD ≤ 7FFFFFFFH	0H Normal	Operates according to the setting.
		Other than above	9H A.94B	Ignores the command and continues the previous command.
VREF VFF	Velocity reference, Velocity feed-forward value	Set signed 4-byte data.		
		–Maximum output speed*2 to +Maximum output speed	0H Normal	Operates according to the setting.
		Other than above	1H A.97B	Operates with the speed clamped at the maximum output speed.
TQREF TFF	Torque reference, Torque feed-forward value	Set signed 4-byte data.		
		–Maximum torque to +Maximum torque	0H Normal	Operates according to the setting.
		Other than above	1H A.97B	Operates with the torque clamped at the maximum torque.
TLIM	Torque limit	Set the limit with unsigned 4-byte data.		
		0 to Maximum torque	0H Normal	Operates according to the setting.
		Maximum torque or greater	1H A.97B	Operates with the torque clamped at the maximum torque.
		80000000H to FFFFFFFEH	1H A.97B	DRIVER processes as TLIM = 7FFFFFFFH internally.
		FFFFFFFFH	0H Normal	No torque limit applies. (The torque is clamped at the maximum torque and the alarm CMD_ALM does not occur.)

Name	Description	Setting	CMD_ALM Warning Code	Operation for the Setting
VLIM	Speed limit	Set the limit with unsigned 4-byte data.		
		0 to Maximum output speed*2	0H Normal	Operates according to the setting.
		Maximum output speed or greater	1H A.97B	Operates with the speed clamped at the maximum output speed.
		80000000H to FFFFFFFEH	1H A.97B	DRIVER processes as VLIM = 7FFFFFFFH internally.
		FFFFFFFFH	0H Normal	No speed limit applies. (The speed is clamped at the maximum output speed and the alarm CMD_ALM does not occur.)
ACCR DECR	Acceleration, Deceleration (position control)	Set the acceleration/deceleration with unsigned 4-byte data.		
		1 to Maximum acceleration*3 Maximum deceleration	0H Normal	Operates according to the setting.
		Maximum acceleration or greater Maximum deceleration or greater	9H A.94B	Ignores the command and continues the previous command.
		0, 80000000H to FFFFFFFEH	9H A.94B	Ignores the command and continues the previous command.
		FFFFFFFFH	0H Normal	Operates at the maximum acceleration/deceleration and the alarm CMD_ALM does not occur.
		Both ACCR and DECR are set at "0."	0H Normal	Acceleration/deceleration is performed according to the parameter settings.
ACCR DECR	Acceleration, Deceleration (speed control)	Set the acceleration/deceleration with unsigned 4-byte data. Unit: $\times 10^n$ [Reference unit/s^2]		
		1 to Maximum acceleration Maximum deceleration	0H Normal	Operates according to the setting.
		Maximum acceleration or greater Maximum deceleration or greater	9H A.94B	Ignores the command and continues the previous command.
		0, 80000000H to FFFFFFFEH	9H A.94B	Ignores the command and continues the previous command.
		FFFFFFFFH	0H Normal	Operates at the maximum acceleration/deceleration and the alarm CMD_ALM does not occur.
		Both ACCR and DECR are set at "0."	9H A.94B	Ignores the command and continues the previous command.

*1. Maximum commandable speed = 2097152000 [Reference unit/s]
*2. Maximum output speed = Common parameter 05
*3. Maximum acceleration/deceleration = 209715200000 [Reference unit/s^2]

8.15 Subcommands

The following table shows the subcommands.

For information on the combinations of main commands and subcommands, refer to *8.5.4 Combinations of Main Commands and Subcommands*.

Profile	Command Code (Hex.)	Command	Operation	Communication Phases*2		
				1	2	3
Servo Commands	00	NOP	No operation	–	○	○
	05	ALM_RD*1	Read alarm/warning	–	○	○
	06	ALM_CLR	Clear alarm/warning state	–	○	○
	1D	MEM_RD*1	Read memory command	–	○	○
	1E	MEM_WR*1	Write memory command	–	○	○
	30	SMON	Monitor servo status	–	○	○
	40	SVPRM_RD*1	Read servo parameter	–	○	○
	41	SVPRM_WR	Write servo parameter	–	○	○

∗1. Specification restrictions apply (Refer to the subsection describing each command for the details of the restrictions.)
∗2. ○ : Can be executed, Δ: Ignored, ×: Command error, –: Indefinite response data

8.15.1 No Operation Subcommand (NOP: 00H)

Data Format

Phases in which the Command can be Executed	2, 3	Command Classification	Common command	Asynchronous command
Processing Time	Within communication cycle			

Byte	NOP		Description
	Command	Response	
32	00H	00H	• The NOP subcommand is used for network control. • Confirm the completion of the subcommand execution by checking that RSUBCMD = NOP (= 00H) and SUB_STAT.SBCMDRDY = 1.
33	SUB_CTRL	SUB_STAT	
34			
35			
36	Reserved	Reserved	
37			
38			
39			
40			
41			
42			
43			
44			
45			
46			
47			

8.15.2 Read Alarm or Warning Subcommand (ALM_RD: 05H)

(1) Data Format

Phases in which the Command can be Executed	2, 3	Command Classification	Common command	Asynchronous command
Processing Time	Refer to the specifications of ALM_RD_MOD			

Byte	ALM_RD		Description
	Command	Response	
32	05H	05H	• The ALM_RD subcommand reads the current alarm or warning state as an alarm or warning code. • Confirm the completion of the subcommand execution by checking that RSUBCMD = ALM_RD (= 05H) and SUB_STAT.SBCMDRDY = 1. In the following cases, an alarm will occur and the subcommand will not be executed. • When the ALM_RD_MOD data is invalid: CMD_ALM = 9H (A.94B) • When the ALM_INDEX data is invalid: CMD_ALM = 9H (A.94B)
33	SUB_CTRL	SUB_STAT	
34			
35			
36	ALM_RD_MOD	ALM_RD_MOD	
37			
38	ALM_INDEX	ALM_INDEX	
39			
40	Reserved	ALM_DATA	
41			
42			
43			
44			
45			
46			
47			

(2) Command Parameters

The details of ALM_RD_MOD are described below.

ALM_RD_MOD	Description	Processing Time
0	Current alarm or warning state Maximum of 4 records (from byte 40 to byte 47)	Within communication cycle
1	Alarm occurrence status history (Warnings are not retained in the history.) Maximum of 4 records (from byte 40 to byte 47)	Within 60 ms

8.15.3 Clear Alarm or Warning Subcommand (ALM_CLR: 06H)

(1) Data Format

Phases in which the Command can be Executed	2, 3	Command Classification	Common command	Asynchronous command
Processing Time	Refer to the specifications of ALM_RD_MOD	Subcommand		

Byte	ALM_CLR		Description
	Command	Response	
32	06H	06H	• The ALM_CLR subcommand clears the alarm or warning state. It changes the state of a slave station, but does not eliminate the cause of the alarm or warning. ALM_CLR should be used to clear the state after the cause of the alarm or warning has been eliminated. • Confirm the completion of the subcommand execution by checking that RSUBCMD = ALM_CLR (= 06H) and SUB_STAT.SBCMDRDY = 1. In the following cases, an alarm will occur and the subcommand will not be executed. • When the ALM_CLR_MOD data is invalid: SUBCMD_ALM = 9H (A.94B) • While editing using SigmaWin+: SUBCMD_ALM = AH (A.95A)
33	SUB_CTRL	SUB_STAT	
34			
35			
36	ALM_CLR_MOD	ALM_CLR_MOD	
37			
38	Reserved	Reserved	
39			
40			
41			
42			
43			
44			
45			
46			
47			

(2) Command Parameters

The details of ALM_CLR_MOD are described below.

ALM_CLR_MOD	Description	Processing Time
0	Clearance of the current alarm or warning state	Within 200 ms
1	Clearance of the alarm history	Within 2 s

8.15.4 Read Memory Subcommand (MEM_RD: 1DH)

(1) Data Format

Phases in which the Command can be Executed	2, 3	Command Classification	Common command	Asynchronous command
Processing Time	Within 200 ms	Subcommand		

Byte	MEM_RD Command	MEM_RD Response	Description
32	1DH	1DH	• The MEM_RD subcommand reads the data stored in virtual memory by specifying the initial address and the data size for reading. • Confirm the completion of the subcommand execution by checking that RSUBCMD = MEM_RD (= 1DH) and SUB_STAT.SUBCMDRDY = 1, and also checking the setting for ADDRESS and SIZE. In the following cases, an alarm will occur and the subcommand will not be executed. • When the ADDRESS data is invalid: SUBCMD_ALM = 9H (A.94A) • When the MODE/DATA_TYPE data is invalid: SUBCMD_ALM = 9H (A.94B) • When the SIZE data is invalid: SUBCMD_ALM = 9H (A.94D) • While editing using SigmaWin+: SUBCMD_ALM = AH (A.95A) For details, refer to *8.13.11 Write Memory Command (MEM_WR: 1EH) - Method to Access Virtual Memory Areas*.
33	SUB_CTRL	SUB_STAT	
34			
35			
36	Reserved (0)	Reserved (0)	
37	MODE/ DATA_TYPE	MODE/ DATA_TYPE	
38	SIZE	SIZE	
39			
40	ADDRESS	ADDRESS	
41			
42			
43			
44	Reserved	DATA	
45			
46			
47			

(2) Command Parameters

The details of MODE/DATA_TYPE are described below.

bit7	bit6	bit5	bit4	bit3	bit2	bit1	bit0
MODE				DATA_TYPE			

MODE = 1: Volatile memory, 2: Not supported
DATA_TYPE = 1: Byte, 2: Short, 3: Long, 4: Not supported

SIZE: Data size for reading (of type specified by DATA_TYPE)
ADDRESS: Initial address for reading
DATA: Read data

8.15.5 Write Memory Subcommand (MEM_WR: 1EH)

(1) Data Format

Phases in which the Command can be Executed	2, 3	Command Classification	Common command	Asynchronous command
Processing Time	Refer to *8.13.11 (2) Command Parameters - Executing the Adjustment Operation.*	Subcommand		

Byte	MEM_WR Command	MEM_WR Response	Description
32	1EH	1EH	• The MEM_WR subcommand writes the data in virtual memory by specifying the initial address, the data size and the data for writing. • This subcommand provides an adjustment function equivalent to that of the ADJ command of the MECHATROLINK-II compatible profile. For the operation procedure, refer to the MEM_WR main command. • Confirm the completion of the subcommand execution by checking that RSUBCMD = MEM_WR (= 1EH) and SUB_STAT.SUBCMDRDY = 1, and also checking the setting for ADDRESS, SIZE and DATA. In the following cases, an alarm will occur and the subcommand will not be executed. • When the ADDRESS data is invalid: SUBCMD_ALM = 9H (A.94A) • When the MODE/DATA_TYPE data is invalid: SUBCMD_ALM = 9H (A.94B) • When the SIZE data is invalid: SUBCMD_ALM = 9H (A.94D) • When the conditions for executing the adjustment operation are not satisfied: SUBCMD_ALM = AH (A.95A) • While editing using SigmaWin+: SUBCMD_ALM = AH (A.95A) For details, refer to *8.13.11 Write Memory Command (MEM_WR: 1EH) - Method to Access Virtual Memory Areas*.
33	SUB_CTRL	SUB_STAT	
34			
35			
36	Reserved (0)	Reserved (0)	
37	MODE/ DATA_TYPE	MODE/ DATA_TYPE	
38	SIZE	SIZE	
39			
40	ADDRESS	ADDRESS	
41			
42			
43			
44	DATA	DATA	
45			
46			
47			

(2) Command Parameters

The details of MODE/DATA_TYPE are described below.

bit7	bit6	bit5	bit4	bit3	bit2	bit1	bit0
MODE				DATA_TYPE			

MODE = 1: Volatile memory, 2: Non-volatile memory (Non-volatile memory can be selected only for common parameters)
DATA_TYPE = 1: Byte, 2: Short, 3: Long, 4: Not supported
SIZE: Data size for writing (of type specified by DATA_TYPE)
ADDRESS: Initial address for writing
DATA: Data to be written

8.15.6 Servo Status Monitor Subcommand (SMON: 30H)

Data Format

Phases in which the Command can be Executed	2, 3	Command Classification	Common command	Asynchronous command
Processing Time	Within communication cycle	Subcommand		

Byte	SMON		Description
	Command	Response	
32	30H	30H	• The SMON subcommand reads the alarms, status, and monitor information (position, speed, output, torque, etc.) specified in monitor setting, and the state of the I/O signals of the servo drive. • Confirm the completion of the subcommand execution by checking that RSUBCMD = SMON (= 30H) and SUB_STAT.SUBCMDRDY = 1.
33	SUB_CTRL	SUB_STAT	
34			
35			
36	Reserved	MONITOR4	
37			
38			
39			
40		MONITOR5	
41			
42			
43			
44		MONITOR6	
45			
46			
47			

8.15.7 Read Servo Parameter Subcommand (SVPRM_RD: 40H)

(1) Data Format

Phases in which the Command can be Executed	2, 3	Command Classification	Servo standard command	Asynchronous command
Processing Time	Within 200 ms	Subcommand		

Byte	SVPRM_RD		Description
	Command	Response	
32	40H	40H	• The SVPRM_RD subcommand reads the servo parameters on specification of the servo parameter number, data size, and the read mode. • Confirm the completion of the subcommand execution by checking that RSUBCMD = SVPRM_RD (= 40H) and SUB_STAT.SUBCMDRDY = 1, and also checking the setting for NO, SIZE and MODE. In the following cases, an alarm will occur. Do not read PARAMETER in the response in these cases because the PARAMETER value will be indefinite. • When the NO data is invalid: SUBCMD_ALM = 9H (A.94A) • When the SIZE data is invalid: SUBCMD_ALM = 9H (A.94D) • When the MODE data is invalid: SUBCMD_ALM = 9H (A.94B) • While editing using SigmaWin+: SUBCMD_ALM = AH (A.95A)
33	SUB_CTRL	SUB_STAT	
34			
35			
36	NO	NO	
37			
38	SIZE	SIZE	
39	MODE	MODE	
40	Reserved	PARAMETER	
41			
42			
43			
44			
45			
46			
47			

(2) Command Parameters

NO: Servo parameter number
SIZE: Servo parameter data size [byte]
MODE: Servo parameter read mode

Servo Parameter Type	Reading Source	Mode Setting
Common Parameters	RAM area	00H
Device Parameter	RAM area	10H

PARAMETER: Servo parameter data

8.15.8 Write Servo Parameter Subcommand (SVPRM_WR: 41H)

(1) Data Format

Phases in which the Command can be Executed	2, 3	Command Classification	Servo standard command	Asynchronous command
Processing Time	Within 200 ms	Subcommand		

Byte	SVPRM_WR Command	SVPRM_WR Response	Description
32	41H	41H	• The SVPRM_WR subcommand writes the servo parameters on specification of the servo parameter number, data size, and write mode. • Confirm the completion of the subcommand execution by checking that RSUBCMD = SVPRM_WR (= 41H) and SUB_STAT.SUBCMDRDY = 1, and also checking the setting for NO, SIZE, MODE and PARAMETER. In the following cases, an alarm will occur and the subcommand will not be executed. • When the NO data is invalid: SUBCMD_ALM = 9H (A.94A) • When the SIZE data is invalid: SUBCMD_ALM = 9H (A.94D) • When the MODE data is invalid: SUBCMD_ALM = 9H (A.94B) • When the PARAMETER data is invalid: SUBCMD_ALM = 9H (A.94B) • While editing using SigmaWin+: SUBCMD_ALM = AH (A.95A)
33	SUB_CTRL	SUB_STAT	
34			
35			
36	NO	NO	
37			
38	SIZE	SIZE	
39	MODE	MODE	
40	PARAMETER	PARAMETER	
41			
42			
43			
44			
45			
46			
47			

Note: If the main command and subcommand specifying the same NO are received at the same time as new commands, the main command takes precedence and the alarm specified by SUBCMD_ALM occurs for the subcommand.

(2) Command Parameters

NO: Servo parameter number
SIZE: Servo parameter data size [byte]
MODE: Servo parameter write mode

Servo Parameter Type	Reading Source	Mode Setting
Common Parameters	RAM area	00H
	Retentive memory area	01H
Device Parameter	RAM area	10H
	Retentive memory area	11H

PARAMETER: Servo parameter data

8.16 Preparing for Operation

This section describes how to set communications specifications before starting communications, and how to confirm the communications status.

8.16.1 Setting MECHATROLINK-III Communications

The rotary switches (S1 and S2) and DIP switch (S3), which are located near the top under the front cover of LECY series DRIVER, are used as shown below to set the communications specifications. The station address and the number of transmission bytes are set with these switches.

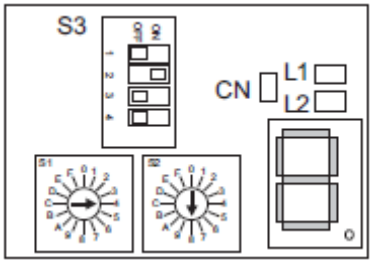

	Description					
Station Address	03H to EFH Set with the rotary switches (S1 and S2). Example: To set the address 48H, set S1 = 4 and S2 = 8.					
Number of Transmission Bytes	Set with the DIP switch (S3).					
	Number of Bytes	Switch Setting				Remark
		1	2	3	4	
	16	OFF	OFF	OFF	OFF	Do not use this setting.
	32	ON	OFF	OFF	OFF	Make this setting when subcommands are disabled.
	48	OFF	ON	OFF	OFF	Make this setting when subcommands are enabled.
	–	ON	ON	OFF	OFF	Do not use this setting.

8.16.2 Checking the Communications Status

To confirm that the DRIVER is in the communication enabled state, check the L1, L2 and CN LEDs.

	Description
L1 LED L2 LED	When communications in the data link layer have started, these LEDs are lit. The L1 LED indicates the status of the communication port at the CN6A connector and the L2 LED that at the CN6B connector. Lit: In normal communication Unlit: Communication not in progress due to disconnected cable, etc.
CN LED	When the connection in the application layer has been established, this LED is lit. Lit: In the CONNECT command completed state Unlit: In the CONNECT command incompleted state
7-segment LED	In normal state: Indicates the status. In alarm/warning state: Indicates the alarm/warning code. 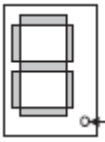 Lights when the control power is ON.

8.17 Parameter Management and Operation Sequence

8.17.1 Operation Sequence for Managing Parameters Using a PC or PLC...etc

When the parameters are managed by a PC or PLC...etc, the parameters are automatically transmitted from the PC or PLC...etc to the DRIVER when the power is turned ON. Therefore, the settings of DRIVER do not need to be changed when the DRIVER is replaced.

Procedure	Operation	Command to Send
1	Turn ON the control and main circuit power supplies.	–
2	Confirm the completion of the initialization process of the DRIVER.	NOP
3	Reset the previous communications status.	DISCONNECT *
4	Establish communications connection and starts WDT count.	CONNECT
5	Check information such as device ID.	ID_RD
6	Read device setting data such as parameters.	SVPRM_RD
7	Set the parameters required for the device.	SVPRM_WR
8	Enable the parameter settings (Setup).	CONFIG
9	Turn ON the encoder power supply to obtain the position data.	SENS_ON
10	Turn the servo ON.	SV_ON
11	Start operation.	POSING, INTERPOLATE, etc.
12	Turn the servo OFF.	SV_OFF
13	Disconnect the communications connection.	DISCONNECT
14	Turn OFF the control and main circuit power supplies.	–

* When starting the operation sequence with turning the power ON as the first step, it is not necessary to send the DISCONNECT command.

Note: This example sequence shows the steps to enable starting of communications regardless of the status at that point.

8.17.2 Operation Sequence for Managing Parameters Using a DRIVER

To manage the parameters by using DRIVER's non-volatile memory, save the parameters in the non-volatile memory at setup and use an ordinary operation sequence.

(1) Setup Sequence

Procedure	Operation	Command to Send
1	Turn ON the control and main circuit power supplies.	NOP
2	Reset the previous communications status.	DISCONNECT *
3	Establish communications connection and starts WDT count.	CONNECT
4	Check information such as device ID.	ID_RD
5	Get device setting data such as parameters.	SVPRM_RD
6	Save the parameters required for the device in the non-volatile memory.	SVPRM_WR Note: Do not use RAM.
7	Disconnect the communications connection.	DISCONNECT
8	Turn OFF the control and main circuit power supplies.	–

∗ If the connection cannot be released normally, send a DISCONNECT command for 2 or more communication cycles, and then send a CONNECT command.

(2) Ordinary Operation Sequence

Procedure	Operation	Command to Send
1	Turn ON the control and main circuit power supplies.	NOP
2	Reset the previous communications status.	DISCONNECT *
3	Establish communications connection and starts WDT count.	CONNECT
4	Check information such as device ID.	ID_RD
5	Get device setting data such as parameters.	SVPRM_RD
6	Turn ON the encoder power supply to obtain the position data.	SENS_ON
7	Turn the servo ON.	SV_ON
8	Start operation.	POSING, INTERPOLATE, etc.
9	Turn the servo OFF.	SV_OFF
10	Disconnect the communications connection.	DISCONNECT
11	Turn OFF the control and main circuit power supplies.	–

∗ If the connection cannot be released normally, send a DISCONNECT command for 2 or more communication cycles, and then send a CONNECT command.

8.18 Setting the Zero Point before Starting Operation

(1) When Using an Absolute Encoder

When an absolute encoder is used in the slave station, the SENS_ON command can be used to set the reference coordinate system of the slave station. The reference coordinate system will be set according to the position detected by the absolute encoder and the coordinate system offset of the encoder (i.e., the offset between the encoder's coordinate system and the reference coordinate system (device built-in parameter)). The relationship between the reference coordinate system (CPOS and APOS), the encoder's coordinate system, and the coordinate system offset of the encoder are shown in the following figure.

CPOS: Reference position
APOS: Feedback position

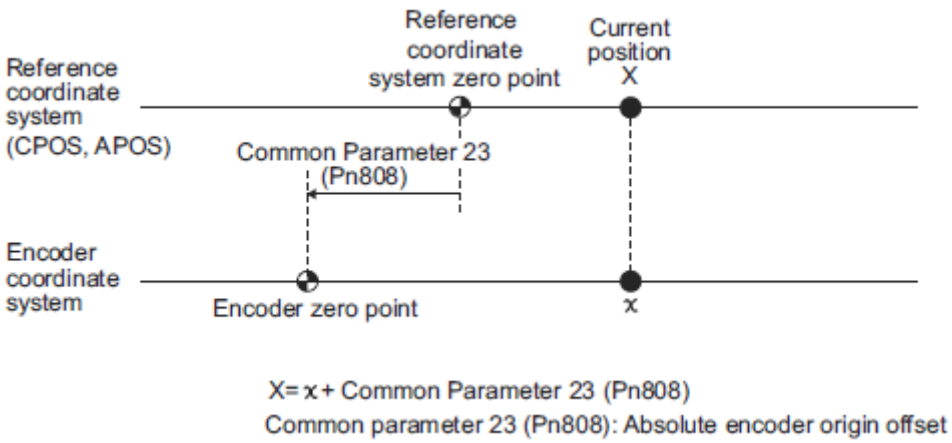

8.19 Operation Sequence when Turning the Servo ON

Motor control using a PC or PLC...etc is performed using motion commands only in the servo ON state (motor power ON).

In the servo OFF state (when the power to the motor is shut OFF), the DRIVER manages position data so that the reference coordinate system (CPOS, MPOS) and the feedback coordinate system (APOS) are equal. For correct execution of motion commands, therefore, it is necessary to use the SMON (status monitoring) command after the servo ON state has been established, to read the servo reference coordinates (CPOS) and send an appropriate reference position. Set the coordinate system of the DRIVER using the POS_SET command as necessary.

After completing the setting of the coordinate systems, carry out machine operation using motion commands.

8.20 Operation Sequence when OT (Overtravel Limit Switch) Signal is Input

When an OT signal is input, the DRIVER prohibits the motor from rotating in the way specified in parameter Pn001. The motor continues to be controlled by the DRIVER while its rotation is prohibited.

When an OT signal is input, use the following procedure to process the OT signal.

Procedure	Operation
1	Monitor OT signals. When an OT signal is input, send an appropriate stop command: While an interpolation command (INTERPOLATE) is being executed: Continues execution of the interpolation command while stopping updating of the interpolation position. Or, sends an SMON command. While a move command (such as POSING) other than interpolation commands is being executed: sets CMD_CANCEL = 1.
2	Check the output completion flag DEN. If DEN = 1, the DRIVER completed the OT processing. At the same time, check the flag ZSPD. If ZSPD = 1, the motor is completely stopped. Keep the command used in procedure 1 active until both of the above flags are set to 1.
3	Read out the current reference position (CPOS) and use it as the start position for retraction processing.
4	Use a move command such as POSING or INTERPOLATE for retraction processing. Continue to use this command until the retraction is finished. If the move command ends without finishing the retraction, restart the move command continuously from the last target position.

Note:
- When an OT signal is input during execution of a motion command such as ZRET, EX_FEED or EX_POSING, the execution of the command will be cancelled.
- During the overtravel state (P-OT = 1 or N-OT = 1), the servomotor is not positioned to the target position specified by the host PC or PLC...etc. Check the feedback position (APOS) to confirm that the axis is stopped at a safe position.

IMPORTANT

If the state of an OT signal varies over a short time (in a pulsing manner for example), the host PC or PLC...etc may not be able to monitor the variation of the OT signal properly. Take due care about the selection of limit switches and their mounting and wiring to avoid chattering of OT signals and malfunctioning.

8.21 Operation Sequence at Emergency Stop (Main Circuit OFF)

For circuits incorporating the recommended processing that the control and main circuit power supplies turn OFF on occurrence of an emergency stop, no specific process is required.

For circuits that turn OFF only the main circuit power supply, follow the procedure below.

After confirming that the SV_ON or PON bit in the STATUS field of the response data is OFF (= 0), send an SV_OFF command. While in an emergency stop state, always monitor the DRIVER status using a command such as the SMON (status monitoring) command.

For recovery from an emergency stop state, follow the action to be taken on occurrence of an alarm.

8.22 Operation Sequence when a Safety Signal is Input

When an HWBB1 or HWBB2 signal is input while the motor is being operated, current to the motor will be forcibly stopped, and the motor will be stopped according to the setting of the 1st digit of parameter Pn001.

[When an HWBB signal is input after the DRIVER stops powering the motor]

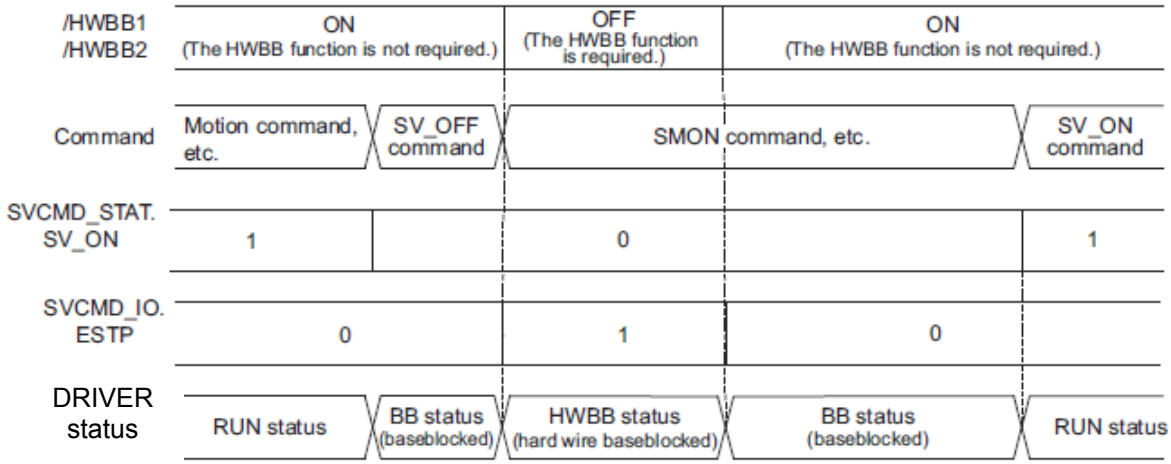

[When an HWBB signal is input while the DRIVER is powering the motor]

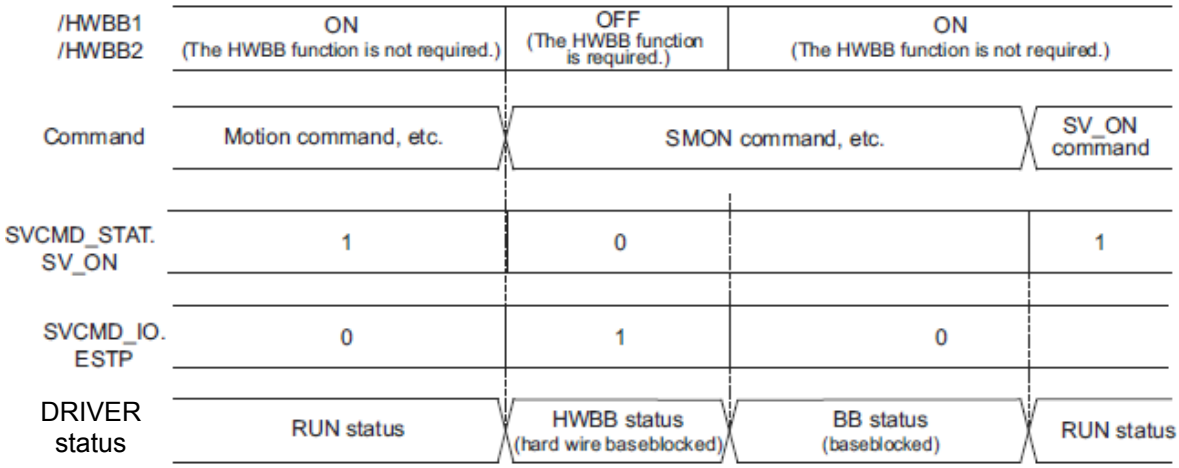

- When an HWBB Signal is Input:

  Monitor the HWBB input signal and SCM output signal status, or ESTP signal (HWBB) status in the SVCMD_IO (servo command input signal) field. If a forced stop status is detected, send a command such as SV_OFF to stop the motor.

- Recovery from Stop Status:

  Recover from the stop status by following the procedure below.

  1. Reset the HWBB1 or HWBB2 signal.
     The HWBB state is still valid at this point.
  2. Send an SV_OFF command to shift the DRIVER to the base block state.
  3. Carry out PC or PLC...etc and system recovery processing.
  4. Send an SV_ON command to establish the servo ON state.
  5. Complete the preparation for operation after establishing the servo ON state.
  6. Start operation.

Note 1. If the DRIVER enters the HWBB status while sending an SV_ON command, reset the /HWBB1 or /HWBB2 signal and then send a command other than SV_ON, such as SV_OFF. Then, send the SV_ON command again to restore the normal operation status.

2. If the DRIVER enters the HWBB status during execution of an SV_OFF, INTERPOLATE, POSING, FEED, EX_FEED, EX_POSING, or ZRET command, a command warning will occur since the DRIVER status changes to the servo OFF state. Execute the clear alarm or warning (ALM_CLR) command to restore normal operation.

8.23 Operation Sequence at Occurrence of Alarm

When the D_ALM bit in the CMD_STAT field of the response is 1 or a COMM_ALM field of 8 or a greater value is detected, send the SV_OFF command. Use the ALM_RD command to check the alarm code.
To clear the alarm status, send the ALM_CLR command or set the ALM_CLR bit of the CMD_CTRL command to "1" after eliminating the cause of the alarm. However, this will not clear the alarm status that require the power supply to be turned OFF and back ON for clearance.

- For Communication Error Alarms
  When a communication error alarm (COMM_ALM ≥ 8) occurs, the communication phase shifts to phase 2. To restore communication phase 3, send a SYNC_SET command after resetting the alarm.

- For Warnings
  When the D_WAR bit is 1 or the COMM_ALM field of a value from 1 to 7 is detected, a warning occurs but the servo OFF state will not be established. Check the alarm code using the ALM_RD command and perform appropriate processing. To clear the warning state, send the ALM_CLR command or set the ALM_CLR bit of the CMD_CTRL command to "1."

- For Command Errors
  Check the status of CMD_ALM with the host PC or PLC...etc in every communication cycle and perform appropriate processing because CMD_ALM will be automatically cleared on reception of the next normal command after detecting CDM_ALM ≠ 0.

8.24 Notes when the Positioning Completed State (PSET = 1) is Established while Canceling a Motion Command

When the DRIVER enters any of the following states during execution of a motion command, it may cancel the execution of the motion command and establish the positioning completed state (PSET = 1).

- The servo OFF state (SV_ON of SVCMD_STAT set to "0") has been established due to an alarm (D_ALM of CMD_STAT set to "0" or COMM_ALM ≥ 8).
- The servo OFF state (SV_ON of SVCMD_STAT set to "0") has been established because the main power supply was turned OFF (PON of SVCMD_STAT set to "0").
- The motor has stopped due to overtravel (P-OT or N-OT of SVCMD_IO set to "1") or a software limit (P_SOT or N_SOT of SVCMD_IO set to "1").
- The servo OFF state (SV_ON of SVCMD_STAT set to "0") has been established because the HWBB signal was turned OFF (ESTP of SVCMD_IO set to "1").

In this case, the motor has not reached the target position specified by the host PC or PLC...etc even though PSET is set to "1." Check the feedback position (APOS) to confirm that the axis is stopped at a safe position.

IMPORTANT	If the state of an OT signal varies over a short time (in a pulsing manner for example), the host PC or PLC...etc may not be able to monitor the variation of the OT signal properly. Take due care about the selection of limit switches and their mounting and wiring to avoid chattering of OT signals and malfunctioning.

8.25 Function/Command Related Parameters

8.25.1 Interpolation Command

When sending the INTERPOLATE command, the speed feedforward and torque feedforward values can be specified along with the target position.

The sum of the speed feedforward value specified by the INTERPOLATE command and the (speed) feedforward value set in the parameters (common parameter 64 (Pn109) and Pn10A) will be applied.

Specifying the speed feedforward value using the INTERPOLATE command may lead to overshooting if the settings of the following parameters (common parameter 64 (Pn109) and Pn10A) are inappropriate. When specifying the speed feedforward value using the INTERPOLATE command, set the parameters to "0" (factory setting).

Common Parameters	Name	Data Size (Byte)	Setting Range	Unit	Factory Setting
64	Feedforward Compensation	4	0 to 100	%	0

Parameter	Name	Data Size (Byte)	Setting Range	Unit	Factory Setting
Pn109	Feedforward Gain	2	0 to 100	1%	0
Pn10A	Feedforward Filter Time Constant	2	0 to 64000	0.01 ms	0

If the speed feedforward and torque feedforward values are specified using the INTERPOLATE command, the values will be cleared when another command is executed.

8.25.2 Positioning Command

There are the following two kinds of acceleration/deceleration method for positioning commands (POSING, FEED, EX_FEED, EX_POSING, and ZRET).

- Using the acceleration/deceleration specified by the command
- Using the acceleration/deceleration set in the parameters

(1) Using the Acceleration/Deceleration (ACCR and DECR) Specified by the Command

When using the acceleration/deceleration (ACCR and DECR) specified by the command, positioning will be performed with 1-step acceleration/deceleration.

When both the acceleration and deceleration (ACCR and DECR) are set to "0" in the command, positioning will be performed with 2-step acceleration/deceleration according to the parameter settings.

(2) Using the Acceleration/Deceleration Set in the Parameters

Set both the acceleration and deceleration (ACCR and DECR) to "0" in the command and select which parameter setting should be used for the acceleration/deceleration with the 1st digit of parameter Pn833.

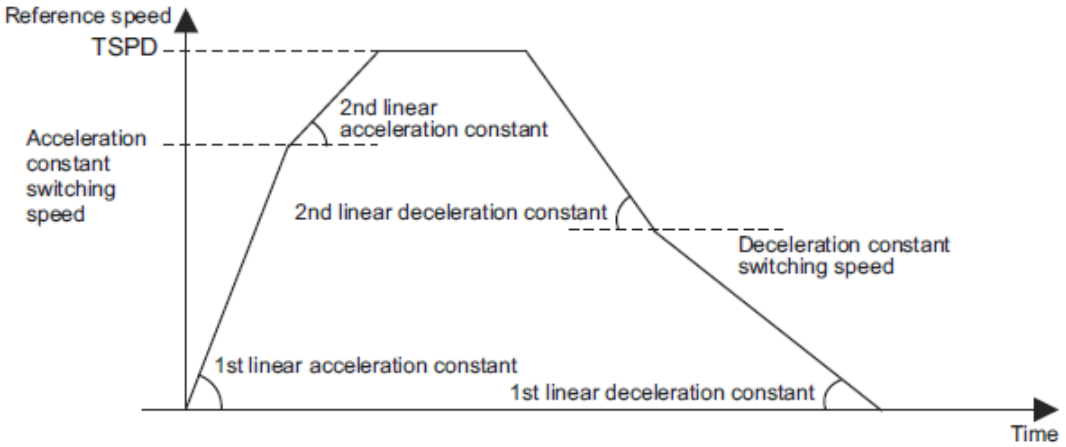

Note: Make settings so that the distance required for deceleration and the deceleration satisfy the following conditions.

Deceleration [reference unit/s^2] ≥ Maximum reference speed [reference unit/s]^2 / (Maximum deceleration distance [reference unit]^{*2})

- Acceleration/Deceleration Constant Switching Setting

Parameter		Meaning	Data Size (Byte)	Setting Range	Unit
Pn833	n.□□□0 [Factory setting]	Use parameters Pn80A to Pn80F and Pn827. (Parameters Pn834 to Pn840 are invalid.)	2	0000H to 0001H	–
	n.□□□1	Use parameters Pn834 to Pn840. (Parameters Pn80A to Pn80F and Pn827 are invalid.)			

Note: The setting will be validated by turning the power supply OFF and then ON again, or by executing the CONFIG command.

- Acceleration/Deceleration Parameters when Pn833=n.□□□0

Parameter	Name	Data Size (Byte)	Setting Range	Unit	Factory Setting
Pn80A	1st Linear Acceleration Constant	2	1 to 65535	10000 reference units/s^2	100
Pn80B	2nd Linear Acceleration Constant	2	1 to 65535	10000 reference units/s^2	100
Pn80C	Acceleration Constant Switching Speed	2	0 to 65535	100 reference units/s	0
Pn80D	1st Linear Deceleration Constant	2	1 to 65535	10000 reference units/s^2	100
Pn80E	2nd Linear Deceleration Constant	2	1 to 65535	10000 reference units/s^2	100
Pn80F	Deceleration Constant Switching Speed	2	0 to 65535	100 reference units/s	0
Pn827	Linear Deceleration Constant for Stopping	2	1 to 65535	10000 reference units/s^2	100

- Acceleration/Deceleration Parameters when Pn833=n.□□□1

Parameter	Name	Data Size (Byte)	Setting Range	Unit	Factory Setting
Pn834	1st Linear Acceleration Constant 2	4	1 to 20971520	10000 reference units/s^2	100
Pn836	2nd Linear Acceleration Constant 2	4	1 to 20971520	10000 reference units/s^2	100
Pn838	Acceleration Constant Switching Speed 2	4	0 to 20971520	100 reference units/s	0
Pn83A	1st Linear Deceleration Constant 2	4	1 to 20971520	10000 reference units/s^2	100
Pn83C	2nd Linear Deceleration Constant 2	4	1 to 20971520	10000 reference units/s^2	100
Pn83E	Deceleration Constant Switching Speed 2	4	0 to 20971520	100 reference units/s	0
Pn840	Linear Deceleration Constant 2 for Stopping	4	1 to 20971520	10000 reference units/s^2	100

8.25.3 Torque (Force) Limiting Function

The torque (force) limiting function limits the torque (force) during position/speed control to protect the con- nected machine, etc. There are three ways to limit the output torque (force).

- Internal torque (force) limit according to parameter settings
- External torque (force) limit using the P_CL and N_CL bits of the SVCMD_IO field
- Torque (force) limit by position/speed control command

If all of the above three methods are used, the smallest torque (force) limit will be applied.

(1) Internal Torque (Force) Limit

This method always limits the maximum output torque (force) to the set values of the following parameters.

Parameter	Name	Data Size (Byte)	Setting Range	Unit	Factory Setting
Pn402	Forward Torque Limit (For rotational servomotors)	2	0 to 800	%	800
Pn403	Reverse Torque Limit (For rotational servomotors)	2	0 to 800	%	800

(2) External Torque (Force) Limit Using P_CL/N_CL Bits of SVCMD_IO Field

This method uses the P_CL and N_CL bits of the SVCMD_IO field to limit the output torque (force) to the values set for the following parameters. Settings can be made using common parameters.

Common Parameters	Name	Data Size (Byte)	Setting Range	Unit	Factory Setting
8C	Forward Torque (Force) Limit	4	0 to 800	%	100
8D	Reverse Torque (Force) Limit	4	0 to 800	%	100

Parameter	Name	Data Size (Byte)	Setting Range	Unit	Factory Setting
Pn404	Forward External Torque (Force) Limit	2	0 to 800	%	100
Pn405	Reverse External Torque (Force) Limit	2	0 to 800	%	100

(3) Torque (Force) Limit by Position/Speed Control Command

Torque (force) limits can be specified using the following commands.
INTERPOLATE, POSING, FEED, EX_FEED, EX_POSING, ZRET, VELCTRL
This method limits the torque (force) to the value set for TLIM of the position/speed control command.
The torque (force) limit will be applied according to the settings of the parameters (Pn81F.1 and Pn002.0).
(Enabled by factory setting)

Parameter		Meaning	Data Size (Byte)	Setting Range	Unit
Pn81F	n.□□0□	Reserved	2	0000H to 0001H	–
	n.□□1□ [Factory setting]	The settings of the TFF and TLIM fields of position control commands are enabled. The torque (force) limit will be applied according to the setting of parameter Pn002.0.			
Pn002	n.□□□0	Reserved	2	0000H to 0003H	–
	n.□□□1 [Factory setting]	Forward and reverse torque limits based on the set- ting of the TLIM field of the position/speed control commands are enabled.			
	n.□□□2	Reserved			
	n.□□□3	Reserved			

The following table shows the operation when all of the three methods are used. The smallest torque (force) limit in each group will be applied.

Pn002.0	Forward Torque Limit		Reverse Torque Limit	
	When P_CL is set to 0	When P_CL is set to 1	When N_CL is set to 0	When N_CL is set to 1
1	Pn402 TLIM	Pn402 Common parameter 8C (Pn404) TLIM	Pn403 TLIM	Pn403 Common parameter 8D (Pn405) TLIM

When sending a command other than the commands that can specify torque limit, the last torque limit specified by the TLIM field remains valid. During execution of the SV_OFF or TRQCTRL command, the torque limit specified by the TLIM field becomes invalid and the maximum torque will be used as the limit.

6.25.4 Torque (Force) Feedforward Function

This function is used to apply a torque (force) feedforward (TFF) from a position/speed control command to shorten positioning time. The host PC or PLC...etc differentiates a position reference to generate a torque (force) feedforward reference.

[Torque (Force) Feedforward Reference Settable Commands]
INTERPOLATE, VELCTRL

[Setting Parameters]
Set the following parameters to use the torque (force) feedforward reference. (Enabled by factory setting)

Pn81F	Position Control Command TFF/TLIM Function Allocation	
	n.□□1□	Enables allocation (Set TFF/TLIM operation using Pn002.)

8.25.5 Software Limit Function

This function forcibly stops the servomotor in the same way as the overtravel function when the moving part of the machine enters the software limit range specified by the parameters (common parameter 26 (Pn804), common parameter 28 (Pn806)).

The method for stopping the servomotor is the same as when an OT signal is input.

(1) Conditions for Enabling the Software Limit Function

The software limit function is enabled when the following operations are completed. In other cases, the function remains disabled.
- Zero point return operation by the ZRET command is completed.
- The coordinate setting is completed after reference point setting (REFE = 1) by executing the POS_SET command.
- When using an absolute encoder, the sensor is turned on by the SENS_ON command.

(2) Parameters Related to Software Limit Functions

Common Parameters	Name		Data Size (Byte)	Setting Range	Unit	Factory Setting
25	Limit Setting		4	0 to 33H	0000H	0000H
	bit 0	P-OT (0: Enabled, 1: Disabled)				
	bit 1	N-OT (0: Enabled, 1: Disabled)				
	bit 2	Reserved				
	bit 3	Reserved				
	bit 4	P-SOT (0: Disabled, 1: Enabled)				
	bit 5	N-SOT (0: Disabled, 1: Enabled)				
	bit 6 to 31	Reserved				
26	Forward Software Limit		4	−1073741823 to 1073741823	Reference unit	1073741823
28	Reverse Software Limit		4	−1073741823 to 1073741823	Reference unit	−1073741823

Parameter		Meaning	Data Size (Byte)	Setting Range	Unit
Pn801	n.□□□0	Enables forward and reverse software limit.	2	0000H to 0103H	–
	n.□□□1	Disables forward software limit.			
	n.□□□2	Disables reverse software limit.			
	n.□□□3 [Factory setting]	Disables software limit in both directions.			
	n.□□0□ [Factory setting]	Reserved			
	n.□0□	Disables software limit for reference.			
	n.□1□□	Enables software limit for reference.			
	n.0□□□ [Factory setting]	Reserved			
Pn804		Forward Software Limit	4	−1073741823 to 1073741823	Reference unit
Pn806		Reverse Software Limit	4	−1073741823 to 1073741823	Reference unit

(3) Software Limit Monitoring

Check servo command input signal monitoring bits P_SOT and N_SOT for software limits.

Software limit operations are not performed in directions for which the software limit function is disabled, and the corresponding servo command input signal monitoring bit is always "0."

- Software Limit for Reference (Pn801.2)

  If the target position specified by a command such as POSING and INTERPOLATE is in the software limit range, positioning will be performed by using the software limit value as the target position.

8.25.6 Latch Function

Three types of current position latch function using an external signal input are available:

- Latching by using the move command with the latch function (EX_FEED, EX_POSING, ZRET)
- Latching based on the latch request set by the LT_REQ1 and LT_REQ2 bits
- Continuous latch based on the latch request set by the LT_REQ2 bit

An overview of the latch operation is presented below.

Type Operation	Move Command with Latch Function	Latching Based on the Latch Request Set by the LT_REQ1 and LT_REQ2 Bits	Continuous Latch Based on the Latch Request Set by the LT_REQ2 Bit
Latch Operation	The slave station starts latching on reception of the command if LT_REQ1 = 1, and ends latching on input of the specified latch signal.	The slave station starts latching if LT_REQ1 = 1 and LT_REQ2 = 1, and ends latching on input of the specified latch signal.	The slave station starts latching if LT_REQ2 = 1, and repeats latching on input of the specified latch signal.
Canceling Latching	Cancelled by LT_REQ1 = 0 Cancelled when the slave station receives another command	Cancelled by LT_REQ1 = 0 and LT_REQ2 = 0	Cancelled by LT_REQ2 = 0
Checking Completion of Latching	Check L_CMP1.	Check L_CMP1 and L_CMP2.	Check L_CMP2 and EX_STATUS.
Outputting Latched Position*	LPOS1	LPOS1, 2	LPOS2
Latching Allowable Area	According to the settings of Pn820 and Pn822		

∗ The specification differs from that of the MECHATROLINK-II compatible profile. Monitor the latched position by selecting the latched position with monitor selection bits SEL_MON1 to 3.

The relationship among the signals related to latching is shown in the diagram below.

Even if a request for latching is made, latch signals will not be accepted until the latching conditions are satisfied.

Whether the latching conditions have been satisfied or not can be checked at LT_RDY1 and LT_RDY2 selected with common monitor 1 (CMN1) and common monitor 2 (CMN2). These monitors correspond to the 0th and 1st bits of the SV_STAT field of common parameter 89 (PnB12).

In either of the following cases, latching will not be performed since the latching conditions are not satisfied.

- Outside the latching allowable area set by parameters
- Inside the latching disabled area in the operation sequence for the ZRET command

- Operation when Latching is Completed

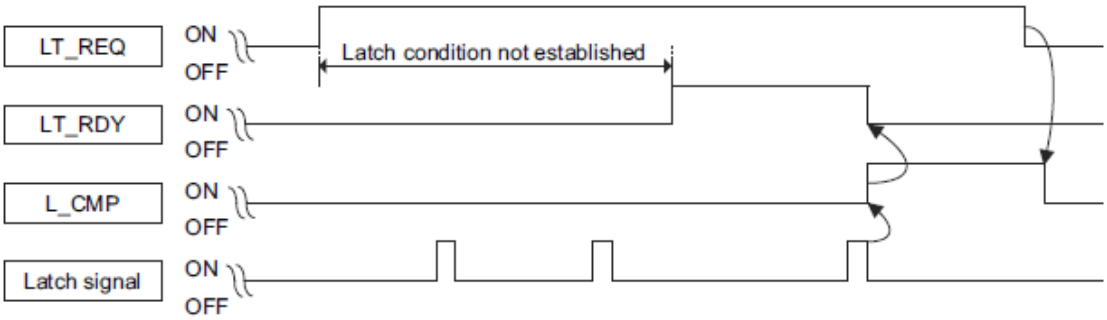

- Operation when Latching is not Completed

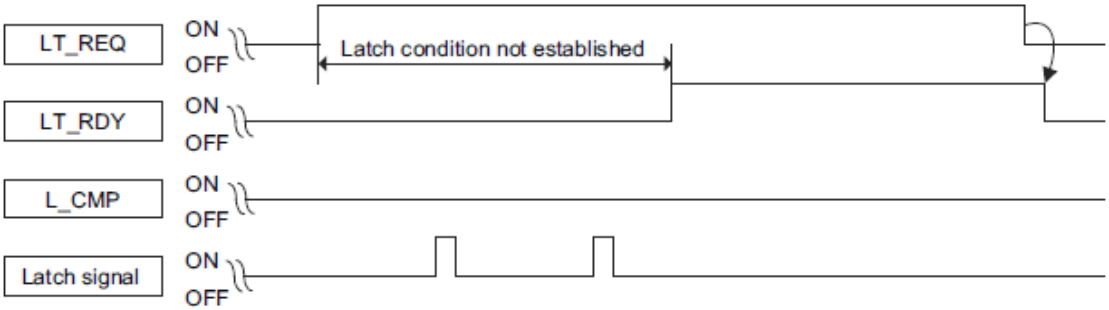

- Latch Time Lag

- From reception of the command to latching start: 250 μs max.
- From completion of latching to transmission of a response: One communication cycle max.

(1) Continuous Latch by LT_REQ2 Bit

This function sequentially latches the input positions of sequence signal 1 to sequence signal n (n = 1 to 8) a specified number of times. The continuous latch operation can be aborted by setting the LT_REQ2 bit to OFF (LT_REQ2 = 0). This function can shorten the time between latch completion and the start of the next latch, and enables sequential latch operations at high speed.

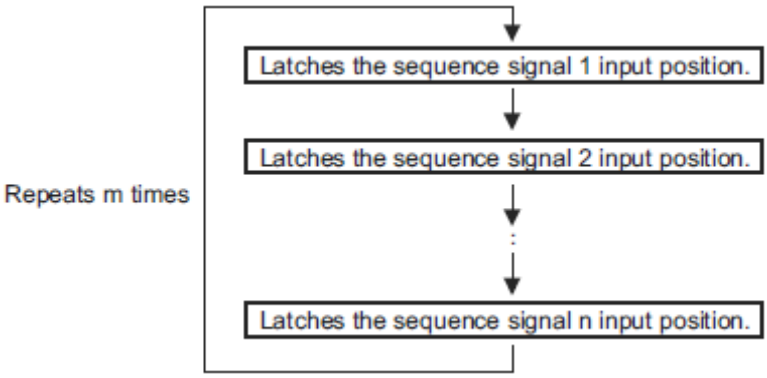

[How to Start and Stop Continuous Latch Operation]

Set the following parameters, and then set LT_REQ2 to "1" to start continuous latch operation. To abort the operation, set LT_REQ2 to "0."

Pn850: Latch Sequence Number n

Pn851: Continuous Latch Count m (When m = 0, the continuous latch operation will be infinitely repeated.)

Pn852: Latch Sequence Signal 1 to 4 Setting

Pn853: Larch Sequence Signal 5 to 8 Setting

Note: If Pn850 is set to "0" and LT_REQ2 to "0", normal latching will be performed.

[Latch Status]

Latch completion can be confirmed by the following status.

[SVCMD_STAT]

L_CMP2: L_CMP2 is set to "1" for one communication cycle every time the external signal is input.

[EX_STATUS]

EX_STATUS is allocated to OMN1 (Pn824) or OMN2 (Pn825). (Pn824 = 84H or Pn825 = 84H)

L_SEQ_NO (D8-D11): The latch sequence signal number (≤ n) on completion of latching of the current position

(Added on completion of position latching)

L_CMP_CNT (D0-D7): The continuous latch count (≤ m)

(Added on completion of position latching when the latch sequence signal n is input.)

[Latched Position Data]

The latest latched position data at completion of latching can be obtained by using the following monitor.

Name	Code	Remark
Feedback Latch Position	LPOS2	The latest latch signal input position

The previously latched position data can be obtained by using the following optional monitors.

Name	Code	Remark
Optional Monitor 1	OMN1	Pn824 = 81H: Previous latch (sequence) signal 2 input position (LPOS2)
Optional Monitor 2	OMN2	Pn825 = 81H: Previous latch (sequence) signal 2 input position (LPOS2)

[Operation Example]

An example of a continuous latch operation using two latch sequence signals EXT1 and EXT2 is illustrated below.

(The parameters are set as follows: Pn850 = 2, Pn851 = 2 or more, Pn852 = 0021H, Pn853 = any)

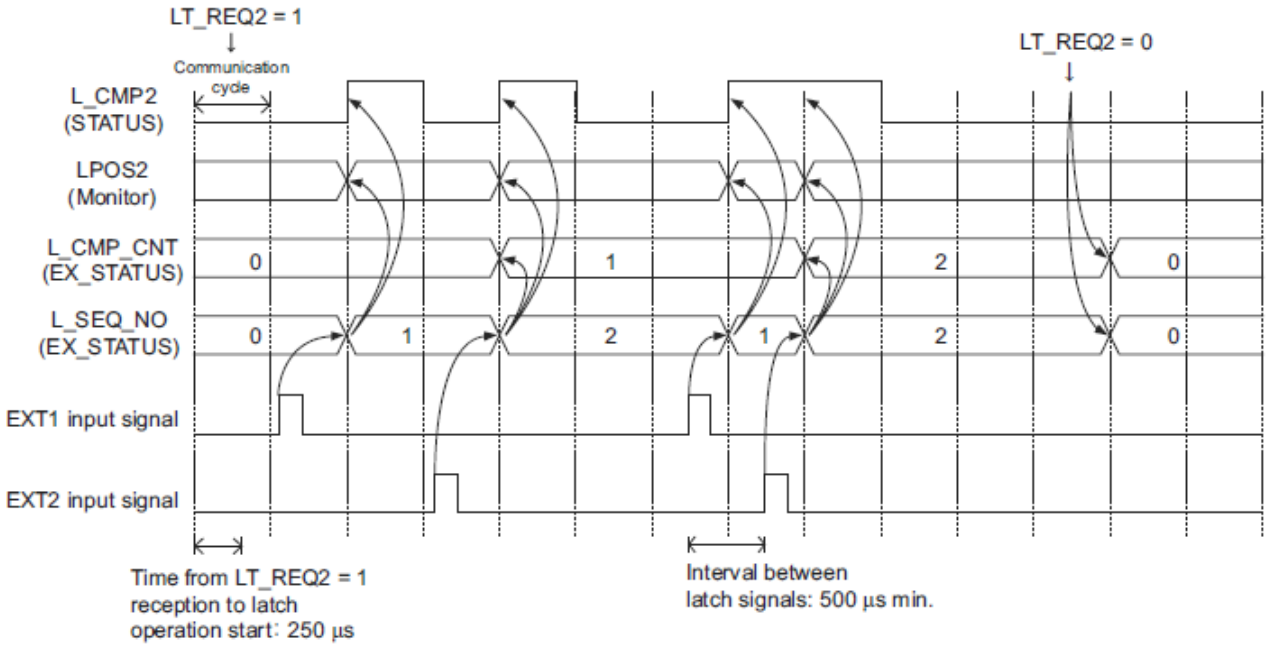

[Setting Parameters]

Parameter No.	Digit	Name			Data Size (Byte)	Setting Range	Unit	Factory Setting
Pn850		Latch Sequence Number			2	0 to 8	–	0
Pn851		Continuous Latch Sequence Count			2	0 to 255	–	0
Pn852		Latch Sequence Signal 1 to 4 Setting			2	0000H to 3333H	–	0000H
	1	Latch Sequence 1 Signal Selection	0	Phase C	–	0 to 3	–	0
			1	EXT1 signal				
			2	EXT2 signal				
			3	EXT3 signal				
	2	Latch Sequence 2 Signal Selection	As above					
	3	Latch Sequence 3 Signal Selection	As above					
	4	Latch Sequence 4 Signal Selection	As above					
Pn853		Latch Sequence Signal 5 to 8 Setting			2	0000H to 3333H	–	0000H
	1	Latch Sequence 5 Signal Selection	0	Phase C	–	0 to 3	–	0
			1	EXT1 signal				
			2	EXT2 signal				
			3	EXT3 signal				
	2	Latch Sequence 6 Signal Selection	As above					
	3	Latch Sequence 7 Signal Selection	As above					
	4	Latch Sequence 8 Signal Selection	As above					

[Application Notes]

1. The minimum interval between latch signals is 500 μs. An interval between latch signals that is longer than the communication cycle is required to continuously obtain latched position data.
2. If two latch signals are input without allowing the minimum required interval, only the first latch signal input position will be latched. The second latch signal will be ignored.
3. The parameters Pn850 to Pn853 can be changed only while the continuous latch operation is stopped.

(2) Setting the Latching Allowable Area

Use the following parameters to set the latching allowable area.

Parameter	Name	Data Size (Byte)	Setting Range	Unit	Factory Setting
Pn820	Forward Latching Allowable Area	4	–2147483648 to 2147483647	Reference unit	0
Pn822	Reverse Latching Allowable Area	4	–2147483648 to 2147483647	Reference unit	0

Latch signal input is enabled when the following two conditions are satisfied.

- Within the latching allowable area set by Pn820 and Pn822
- The LT_REQ1 and LT_REQ2 bits of the SVCMD_CTRL field is set to "1" (requesting latching).*

∗ For the MECHATROLINK-II compatible profile, the conditions are different.

The above conditions for enabling latch signal input are valid for the latch operation for any command.

(a) When Pn820 > Pn822

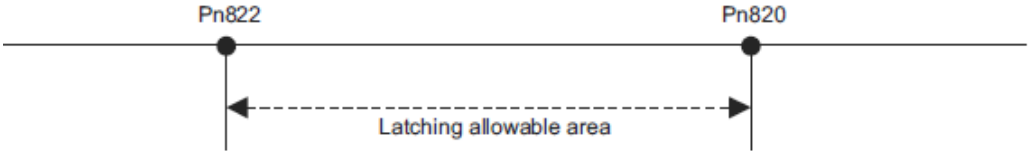

(b) When Pn820 ≤ Pn822

8.25.7 Acceleration/Deceleration Parameter High-speed Switching Function

This function switches all of the acceleration/deceleration parameters that are used for positioning at the same time.

Register the acceleration/deceleration parameter settings in a bank before starting operation, and specify bank selector BANK_SEL1 in the data field of the command to switch the acceleration/deceleration parameter set- tings to those of the registered bank.

[Specifying a Bank]

Specify a bank with the BANK_SEL1 bits of the SVCMD_IO field of the command.

Name	Description	Setting Data
BANK_SEL1 (4 bits)	Bank selector 1 (acceleration/deceleration bank)	Bank 0 to 15

Note: If a bank number larger than the bank number set in Pn900 is specified (BANK_SEL1 ≥ Pn900), the parameter bank will not switch and the currently active bank will be used. The parameters will not switch while DEN = 0 (Distributing) either.

[Parameter Bank Setting]

Set the following parameters.

Parameter No.	Name	Data Size (Byte)	Setting Range	Factory Setting
Pn900	Parameter Bank Number	2	0 to 16	0
Pn901	Parameter Bank Member Number	2	0 to 15	0
Pn902 to Pn910	Parameter Bank Member Definition	2	0000H to 08FFH	0
Pn920 to Pn95F*	Parameter Bank Data	2	0000H to FFFFH Depends on bank member.	0

∗ The parameters Pn920 to Pn95F will not be stored in the non-volatile memory. They need to be set every time the power is turned ON.

[Parameters that can be Registered as Bank Members]

The following parameters can be registered as parameter bank members by parameters Pn902 to Pn910.

For 4-byte parameters, one parameter must be registered as two consecutive members. (See Setting Example 2.)

Parameter	Name	Data Size (Byte)	Setting Range	Unit	Factory Setting
Pn80A	1st Linear Acceleration Constant	2	1 to 65535	10000 reference units/s^2	100
Pn80B	2nd Linear Acceleration Constant	2	1 to 65535	10000 reference units/s^2	100
Pn80C	Acceleration Constant Switching Speed	2	0 to 65535	100 reference units/s	0
Pn80D	1st Linear Deceleration Constant	2	1 to 65535	10000 reference units/s^2	100
Pn80E	2nd Linear Deceleration Constant	2	1 to 65535	10000 reference units/s^2	100
Pn80F	Deceleration Constant Switching Speed	2	0 to 65535	100 reference units/s	0
Pn834	1st Linear Acceleration Constant 2	4	1 to 20971520	10000 reference units/s^2	100
Pn836	2nd Linear Acceleration Constant 2	4	1 to 20971520	10000 reference units/s^2	100
Pn838	Acceleration Constant Switching Speed 2	4	0 to 2097152000	Reference unit/s	0
Pn83A	1st Linear Deceleration Constant 2	4	1 to 20971520	10000 reference units/s^2	100
Pn83C	2nd Linear Deceleration Constant 2	4	1 to 20971520	10000 reference units/s^2	100
Pn83E	Deceleration Constant Switching Speed 2	4	0 to 2097152000	Reference unit/s	0
Pn810	Exponential Function Acceleration/ Deceleration Bias	2	0 to 65535	100 reference units/s	0
Pn811	Exponential Function Acceleration/ Deceleration Time Constant	2	0 to 5100	0.1 ms	0
Pn812	Movement Average Time	2	0 to 5100	0.1 ms	0

[Setting Procedure]

STEP1:

1. Set Pn900 (Parameter Bank Number) to m.
2. Set Pn901 (Parameter Bank Member Number) to n. Set Pn900 and Pn901 so that Pn900 × Pn901 ≤ 64.
3. Register bank member parameter numbers using parameters Pn902 to Pn910.
4. To enable the bank function, execute the CONFIG command or turn the power supply OFF and then ON again.

STEP2:

5. Set the data of each bank in the parameter bank data area from the leading parameter Pn920 in order as shown below.
   Bank 0: Pn920 to Pn (920 + n – 1)
   Bank 1: Pn (920 + n) to Pn (920 + 2n–1)
   :
   Bank m – 1: Pn {920 + (m – 1) × n} to Pn (920 + m × n – 1)

Note 1. If parameters Pn900 to Pn910 set in STEP 1, 2, and 3 are saved in the non-volatile memory, carry out STEP 5 only after turning the power ON the next and subsequent times.
However, if you turn the power supply OFF and then ON again after saving parameters Pn900 to Pn910 in the non-volatile memory (i.e. with the bank function enabled), and start the operation without setting parameters
Pn920 to Pn95F, the operation will be carried out under the condition that all bank data is set to 0 (zero) or the minimum setting.

2. If parameters Pn900 to Pn910 set in STEP 1, 2, and 3 are not saved in the non-volatile memory, carry out STEP 1
to 5 each time the power supply is turned ON.

Setting Example 1: Switching three banks of members Pn80B, Pn80E, and Pn80C

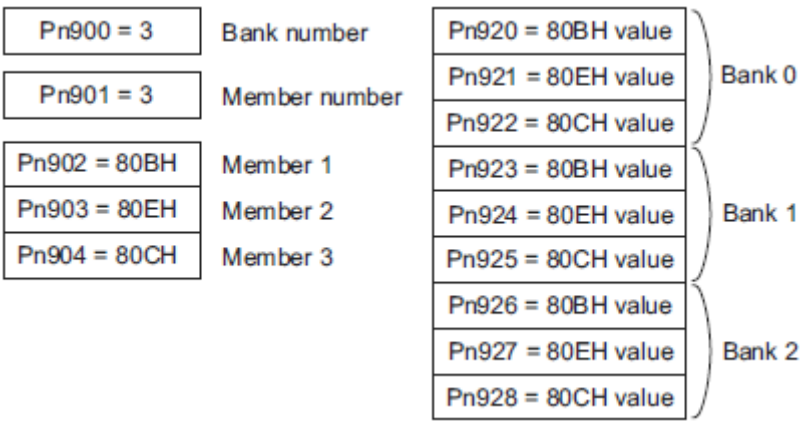

Setting Example 2: Switching two banks of members Pn836, Pn83C, and Pn838

Pn900 = 2	Bank number	Pn920 = 836H LS word	Bank 0
Pn901 = 6	Member number	Pn921 = 836H MS word	
		Pn922 = 83CH LS word	
Pn902 = 836H	Member 1	Pn923 = 83CH MS word	
Pn903 = 836H	Member 2	Pn924 = 838H LS word	
Pn904 = 83CH	Member 3	Pn925 = 838H MS word	
Pn905= 83CH	Member 4	Pn926 = 836H LS word	Bank 1
Pn906 = 838H	Member 5	Pn927 = 836H MS word	
Pn907 = 838H	Member 6	Pn928 = 83CH LS word	
		Pn929 = 83CH MS word	
		Pn92A = 838H LS word	
		Pn92B = 838H MS word	

[Application Notes]

1. If Pn900 (Parameter Bank Number) or Pn901 (Parameter Bank Member Number) is set to 0, the bank function will be disabled.
2. If one parameter is registered for more than one bank member definition, the bank data of the biggest bank member definition parameter number will be applied.
3. The acceleration/deceleration parameter high-speed switching function is enabled only while DEN = 1 (distribution completed). The parameters will not switch while DEN = 0 (distributing).
4. In the following cases, error A.04A (parameter setting error) will occur when the power supply is turned back ON or CONFIG command is executed.
   • One 4-byte parameter is not registered for two consecutive bank members.
   • The total number of bank data entries exceeds 64 (Pn900 × Pn901 > 64).
5. If a parameter that is not allowed to be a bank member is registered, the bank data of the parameter-registered member will become invalid.
6. Bank data that exceeds the setting range of the registered bank member parameter will be clamped to a value within the setting range.
7. If a bank number larger than the bank number set in Pn900 is specified (BANK_SEL1 ≥ Pn900), the parameter bank will not switch and the currently active bank will be used.
8. The parameters Pn920 to Pn95F will not be stored in the non-volatile memory. They need to be set every time the power is turned ON.

8.26 Detecting Alarms/Warnings Related to Communications or Commands

8.26.1 Communication Related Alarms

The table below shows the communication alarms that may occur in MECHATROLINK-III communications.

If an error is found in the command or data that a DRIVER receives, the DRIVER returns the corresponding alarm code (in the COMM_ALM bit of the CMD_STAT field of the response).

At the same time, the alarm code is displayed on the DRIVER.

Category	Alarm in Response			Remedy	DRIVER Side		
	COMM_ALM	Name	Meaning		Stopping Method	Alarm Code	Alarm Reset
Communication Setting Error	0	Communication data size setting error	The received data size does not match the data size set at the local station. The communication data reception status after starting communication is abnormal.	Review the number of transmission bytes (S3). Review the communication setting of the PC or PLC...etc.	Zero-speed stopping	A.E41	Possible
	0	Station address setting error	The station address setting is invalid or a station assigned the same station address exists in the communication network.	Review the station addresses (S1, S2).	Zero-speed stopping	A.E42	Impossible
Communication Establishment Error	B	Transmission cycle setting error	An unsupported transmission cycle was set on reception of a CONNECT command.	Review the transmission cycle setting of the PC or PLC...etc.	Zero-speed stopping	A.E40	Possible
	C	Synchronization failure	On reception of the CONNECT command and then the SYNC_SET command, the WDT data is not refreshed in each communication cycle and the communication timing cannot be synchronized.	Review the WDT processing of the PC or PLC...etc. Check communication connections. Take countermeasures against noise.	Zero-speed stopping	A.E51	Possible
Communication Error	9	Data reception error	Data reception errors occurred twice consecutively after completing the execution of the CONNECT command. (Influence of noise, etc.) An error is detected on the communication LSI.	Check communication connections. Take countermeasures against noise. To recover from the alarm state, send the ALM_CLR command and then the SYNC_SET command. If the alarm continues, replace the DRIVER.	Zero-speed stopping	A.E60	Possible
	8	FCS error	FCS errors occurred twice consecutively after completing the execution of the CONNECT command. (Influence of noise, etc.)	Check communication connections. Take countermeasures against noise. To recover from the alarm state, send the ALM_CLR command and then the SYNC_SET command.	Zero-speed stopping	A.E62	Possible
	A	Synchronous frame not received	The synchronous frame not received state was detected twice consecutively after completing the execution of the CONNECT command. (Influence of noise, etc.)	Check communication connections. Take countermeasures against noise. To recover from the alarm state, send the ALM_CLR command and then the SYNC_SET command.	Zero-speed stopping	A.E63	Possible

Category	Alarm in Response			Remedy	DRIVER Side		
	COMM_ALM	Name	Meaning		Stopping Method	Alarm Code	Alarm Reset
Communication Synchronization Error	C	Synchronization error	The PC or PLC...etc is not refreshing the WDT data in each communication cycle after completing communi- cation synchronization (in communication phase 3).	Review the WDT processing of the PC or PLC...etc. To recover from the alarm state, send the ALM_CLR command and then the SYNC_SET command.	Zero-speed stopping	A.E50	Possible
	B	Transmission cycle error	The transmission cycle interval varied after completing the execution of the CONNECT command.	Review the transmission cycle interval of the PC or PLC...etc. To recover from the alarm state, send the ALM_CLR command and then the SYNC_SET command.	Zero-speed stopping	A.E61	Possible
	0	Internal synchronization error	The transmission cycle interval varied after completing the execution of the CONNECT command.	Review the transmission cycle interval of the PC or PLC...etc. To recover from the alarm state, turn OFF the power and then turn it back ON.	Stop by dynamic brake	A.E02	Impossible
	0	Internal synchronization error	The transmission cycle interval varied after completing the execution of the CONNECT command.	Review the transmission cycle interval of the PC or PLC...etc. To recover from the alarm state, send the ALM_CLR command and then the SYNC_SET command.	Zero-speed stopping	A.EA2	Possible
System Error	0	Communication LSI initialization error	The initialization process of the communication LSI failed.	Replace the DRIVER.	Stop by dynamic brake	A.b6A	Impossible
	0	Communication LSI error	An error is detected on the communication LSI.	Take countermeasures against noise. Replace the DRIVER.	Stop by dynamic brake	A.b6b	Impossible
Parameter Error	0	Parameter setting error	The parameter settings are not correct when turning the power ON or on execution of the CONFIG command. Cause 1: There is an error in the bank parameter settings. (Refer to *8.25.7 Acceleration/Deceleration Parameter High-speed Switching Function* for details.) Cause 2: The settings of the reserved parameters have been changed as follows. Pn200.2≠1 Pn207.1≠1 Pn50A≠*881H Pn50C≠8888H Pn50D≠8888H	Correct invalid parameter settings. Correct the settings manually or through communication as appropriate.	Stop by dynamic brake	A.04A	Possible
Command Execution Error	0	Command timeout error	The execution of the SV_ON or SENS_ON command was not completed within the set period.	Send the command while the motor is stopped.	Zero-speed stopping	A.ED1	Possible

8.26.2 Warnings Related to Communication and Commands

Warnings are divided into two categories, warnings related to data reception and procedures in MECHATROLINK-III communications and warnings related to the validity of commands.

(1) Communication Errors (COMM_ALM)

The table below shows the warnings related to procedures in MECHATROLINK-III communications. When an error of this kind is detected, the warning code is displayed on the DRIVER as well.
If any of these warnings occur, the relevant command will not be executed because the command data is not properly received. The operation of the servomotor continues. Therefore, the response will be the same as that of the previous command.

Category	Alarm in Response			DRIVER Side	
	COMM_ ALM	Meaning	Remedy	Warning Code	Warning Code Reset
Communi-cations Warning	2	Communication error	Check communication connections. Take countermeasures against noise.	A.960	Necessary
	1	FCS error		A.962	
	3	Synchronization frame not received		A.963	

If a warning A.96□ occurs during the interpolation operation (INTERPOLATE), the interpolation operation at the current feed speed continues within the communication cycle in which the warning A.96□ was detected.

(2) Command Errors (CMD_ALM)

The table below shows the warnings related to the validity of commands.
When an error of this kind is detected, the warning code is displayed on the DRIVER as well.

Category	Alarm in Response			DRIVER Side		Remark
	CMD_ ALM	Meaning	Remedy	Warning Code	Warning Code Reset	
Data Setting Warnin g	9	Parameter numbers or data addresses are incorrect.	Review the content of the command data sent by the PC or PLC...etc. (Refer to the setting conditions of each command and parameter.)	A.94A	Cleared automati-cally	The command received on occurrence of the warning will be ignored. The servomo-tor continues its opera-tion.
	9	The data in the command is invalid.		A.94b		
	9	The combination of data settings is incorrect.		A.94C		
	9	The data size specified by the com-mand is incorrect. The data is specified outside the range for the relevant data.		A.94d		
	1	The data in the command is beyond the limit. It will be clamped at the limit value.		A.97b	Cleared automati-cally	The command will be executed with the data clamped at the limit value.
Command Warning	A	The command sequence is incorrect.	Review the command sending sequence of the PC or PLC...etc. (Refer to the conditions of each com- mand.)	A.95A	Cleared automati-cally	–
	8	An unsupported command has been received.		A.95b		
	A	Latch command interferes.		A.95d		
	B	Subcommand and main command interfere.		A.95E		
	8	An illegal command has been received.		A.95F		
	C	A command not allowed in this com-munication phase has been received.		A.97A		

On reception of a normal command after a command error has occurred, CMD_ALM (A.94□ and A.95□) is cleared automatically.

8.27 Common Parameters

8.27.1 Overview

Common parameters are assigned common parameter numbers that are defined in the standard servo profile and are independent of individual devices. The utilization of common parameters means that parameters can be read or set without using parameter numbers or names specific to individual devices.

To read or set common parameters, select "common parameters" in the MODE field of the SVPRM_RD or SVPRM_WR command.

In the common parameters, there are various parameters that have equivalent functions to device parameters (Pn0□□ to Pn8□□) specific to this DRIVER. As shown in the following example, setting either the common parameter or the device parameter will change the value of the corresponding parameter. (Refer to *8.27.3 Common Parameters and Corresponding Device Parameters*.)

The units (number of significant digits) differ between common parameters and device parameters (Pn0□□ to Pn8□□). Therefore, the values are converted between them as shown in the example below so that the device can operate at the accuracy defined with the device parameters.

Example: Changing the position loop gain

Common Parameter		LECY Device Parameter
No. 63 = 40.000		Pn102 = 40.00
Changed ↓		
No. 63 = <u>50.005</u>	→Converted→	Pn102 = 50.00
		Changed ↓
No. 63 = 60.010	← Converted ←	Pn102 = <u>60.01</u>

8.27.2 List of Common Parameters

The following list shows the common parameters. These common parameters are used to make settings from the host PC or PLC...etc via MECHATROLINK communications. Do not change settings with the SigmaWin+.

Parameter No.	Size	Name		Setting Range	Units [Resolution]	Factory Setting	Enabled Timing	Category
01 (PnA02)	4	Encoder Type (read only)		0 to 1	–	–	–	Device Information Related Parameters
		0000H	Absolute encoder					
		0001H	Incremental encoder					
02 (PnA04)	4	Motor Type (read only)		0 to 1	–	–	–	
		0000H	Rotational servomotor					
03 (PnA06)	4	Semi-closed/Fully-closed Type (read only)		0 to 1	–	–	–	
		0000H	Semi-closed					
		0001H	Fully-closed					
04 (PnA08)	4	Rated Speed (read only)		0 to FFFFFFFFH	min^{-1}	–	–	
05 (PnA0A)	4	Maximum Output Speed (read only)		0 to FFFFFFFFH	min^{-1}	–	–	
06 (PnA0C)	4	Speed Multiplier (read only)		–	–	–	–	
07 (PnA0E)	4	Rated Torque (read only)		0 to FFFFFFFFH	Nm	–	–	
08 (PnA10)	4	Maximum Output Torque (read only)		0 to FFFFFFFFH	Nm	–	–	
09 (PnA12)	4	Torque Multiplier (read only)		–	–	–	–	
0A (PnA14)	4	Resolution (read only)		0 to FFFFFFFFH	pulse/rev	–	–	
0B (PnA16)	4	Scale Pitch		0 to 65536000	nm [0.01 μm]*1	0	After restart	
0C (PnA18)	4	Pulses per Scale Pitch (read only)		0 to FFFFFFFFH	pulse/pitch	–	–	

Note: When using parameters that are enabled after restarting the DRIVER, a CONFIG command must be input or the power must be turned OFF and then ON again.

∗1. Set the units to multiples of 10.

Parameter No.	Size	Name	Setting Range	Units [Resolution]	Factory Setting	Enabled Timing	Category
21 (PnA42)	4	Electronic Gear Ratio (Numerator)	1 to 1073741824	–	1	After restart	Machine Specification Related Parameters
22 (PnA44)	4	Electronic Gear Ratio (Denominator)	1 to 1073741824	–	1	After restart	
23 (PnA46)	4	Absolute Encoder Origin Offset	–1073741823 to 1073741823	1 reference unit	0	Immediately*2	
24 (PnA48)	4	Multiturn Limit Setting	0 to 65535	Rev	65535	After restart	
25 (PnA4A)	4	Limit Setting	0 to 33H	0000H	0000H	After restart	
		bit 0	P-OT (0: Enabled, 1: Disabled)				
		bit 1	N-OT (0: Enabled, 1: Disabled)				
		bit 2	Reserved				
		bit 3	Reserved				
		bit 4	P-SOT (0: Disabled, 1: Enabled)				
		bit 5	N-SOT (0: Disabled, 1: Enabled)				
		bit 6	Reserved				
		bit 7 to 31	Reserved				
26 (PnA4C)	4	Forward Software Limit	–1073741823 to 1073741823	1 reference unit	1073741823	Immediately	
27 (PnA4E)	4	Reserved by System	–	–	0	Immediately	
28 (PnA50)	4	Reverse Software Limit	–1073741823 to 1073741823	1 reference unit	–1073741823	Immediately	
29 (PnA52)	4	Reserved by System	–	–	0	Immediately	
41 (PnA82)	4	Speed Unit*3	0 to 4	–	0	After restart	Unit System Related Parameters
		0000H	Reference unit/sec				
		0001H	Reference unit/min				
		0002H	Percentage (%) of rated speed*4				
		0003H	min^{-1} *4				
		0004H	Max. motor speed/40000000H*5				
42 (PnA84)	4	Speed Base Unit*4, *5 (Set the value of "n" used as the exponent in 10^n when calculating the Speed Unit (41).)	–3 to 3	–	0	After restart	
43 (PnA86)	4	Position Unit	0	–	0	After restart	
		0000H	Reference unit				
44 (PnA88)	4	Position Base Unit (Set the value of "n" used as the exponent in 10^n when calculating the Position Unit (43).)	0	–	0	After restart	

Note: When using parameters that are enabled after restarting the DRIVER, a CONFIG command must be input or the power must be turned OFF and then ON again.

∗2. Available after the SENS_ON command is input.

∗3. When using fully-closed loop control, set 0000H (Reference unit/sec).

∗4. When either 0002H or 0003H is selected for the Speed Unit (parameter 41), set the Speed Base Unit (parameter 42) to a number between -3 and 0.

∗5. When 0004H is selected for the Speed Unit (parameter 41), set the Speed Base Unit (parameter 42) to 0.

Parameter No.	Size	Name		Setting Range	Units [Resolution]	Factory Setting	Enabled Timing	Category
45 (PnA8A)	4	Acceleration Unit		–	–	0	After restart	Unit System Related Parameters
		0000H	Reference unit/sec^2					
		0001H	Not supported					
46 (PnA8C)	4	Acceleration Base Unit (Set the value of "n" used as the exponent in 10^n when calculating the Acceleration Unit (45).)		4 to 6	–	4	After restart	
47 (PnA8E)	4	Torque Unit		1 to 2	–	1	After restart	
		0000H	Not supported					
		0001H	Percentage (%) of rated torque					
		0002H	Max. torque/40000000H*6					
48 (PnA90)	4	Torque Base Unit*6 (Set the value of "n" used as the exponent in 10^n when calculating the Torque Unit (47).)		–5 to 0	–	0	After restart	
49 (PnA92)	4	Compliance Unit System (read only)		–	–	0601011FH	–	
		Speed						
		bit 0	Reference unit/s (1: Enabled)					
		bit 1	Reference unit/min (1: Enabled)					
		bit 2	Percentage (%) of rated speed (1: Enabled)					
		bit 3	min^{-1} (rpm) (1: Enabled)					
		bit 4	Max. motor speed/4000000H (Hex.) (1: Enabled)					
		bit 5 to 7	Reserved (0: Disabled)					
		Position						
		bit 8	Reference unit (1: Enabled)					
		bit 9 to 15	Reserved (0: Disabled)					
		Acceleration						
		bit 16	Reference unit/s^2 (1: Enabled)					
		bit 17	msec (Acceleration time taken to reach the rated speed) (0: Disabled)					
		bit 18 to 23	Reserved (0: Disabled)					
		Torque						
		bit 24	Nm (N) (0: Disabled)					
		bit 25	Percentage (%) of rated torque (1: Enabled)					
		bit 26	Max. torque/40000000 (Hex.) (1: Enabled)					
		bit 27 to 31	Reserved (0: Disabled)					

Note: When using parameters that are enabled after restarting the DRIVER, a CONFIG command must be input or the power must be turned OFF and then ON again.

∗6. When 0002H is selected for the Torque Unit (parameter 47), set the Torque Base Unit (parameter 48) to 0.

Parameter No.	Size	Name	Setting Range	Units [Resolution]	Factory Setting	Enabled Timing	Category
61 (PnAC2)	4	Speed Loop Gain	1000 to 2000000	0.001 Hz [0.1 Hz]	40000	Immedi-ately	Adjustment Related Parameters
62 (PnAC4)	4	Speed Loop Integral Time Constant	150 to 512000	μs [0.01 ms]	20000	Immedi-ately	
63 (PnAC6)	4	Position Loop Gain	1000 to 2000000	0.001/s [0.1/s]	40000	Immedi-ately	
64 (PnAC8)	4	Feedforward Compensation	0 to 100	%	0	Immedi-ately	
65 (PnACA)	4	Position Loop Integral Time Constant	0 to 5000000	μs [0.1 ms]	0	Immedi-ately	
66 (PnACC)	4	Positioning Completed Width	0 to 1073741824	1 reference unit	7	Immedi-ately	
67 (PnACE)	4	NEAR Signal Width	1 to 1073741824	1 reference unit	1073741824	Immedi-ately	
81 (PnB02)	4	Exponential Function Accel/Decel Time Constant	0 to 510000	μs [0.1 ms]	0	Immedi-ately*7	Command Related Parameters
82 (PnB04)	4	Movement Average Time	0 to 510000	μs [0.1 ms]	0	Immedi-ately*7	
83 (PnB06)	4	Final Travel Distance for External Positioning	–1073741823 to 1073741823	1 reference unit	100	Immedi-ately	
84 (PnB08)	4	Homing Approach Speed	0 to 3FFFFFFFH	10^{-3} min^{-1}	5000 value obtained by converting reference/s into 10^{-3} min^{-1}	Immedi-ately	
85 (PnB0A)	4	Homing Creep Speed	0 to 3FFFFFFFH	10^{-3} min^{-1}	500 value obtained by converting reference/s into 10^{-3} min^{-1}	Immedi-ately	
86 (PnB0C)	4	Final Travel Distance for Homing	–1073741823 to 1073741823	1 reference unit	100	Immedi-ately	

Note: When using parameters that are enabled after restarting the DRIVER, a CONFIG command must be input or the power must be turned OFF and then ON again.

*7. Change the setting when the reference is stopped (DEN is set to 1), because the change will affect the output during operation.

Parameter No.	Size	Name		Setting Range	Units [Resolution]	Factory Setting	Enabled Timing	Category
87 (PnB0E)	4	Monitor Selection 1		0 to F	–	1	Immedi-ately	Command Related Parameter s
		0000H	APOS					
		0001H	CPOS					
		0002H	PERR					
		0003H	LPOS1					
		0004H	LPOS2					
		0005H	FSPD					
		0006H	CSPD					
		0007H	TRQ					
		0008H	ALARM					
		0009H	MPOS					
		000AH	Reserved (Indefinite value)					
		000BH	Reserved (Indefinite value)					
		000CH	CMN1 (Common monitor 1)					
		000DH	CMN2 (Common monitor 2)					
		000EH	OMN1 (Optional monitor 1)					
		000FH	OMN2 (Optional monitor 2)					
88 (PnB10)	4	Monitor Selection 2		–	–	0	Immedi-ately	
		0000H to 000FH	Same as Monitor Selection 1.					

Parameter No.	Size	Name	Setting Range	Units [Resolution]	Factory Setting	Enabled Timing	Category
89 (PnB12)	4	Monitor Selection for SEL_MON1 (CMN1)	0 to 6	–	0	Immediately	Command Related Parameters

0000H	TPOS (Target position in the command coordinates)
0001H	IPOS (Reference position in the command coordinates)
0002H	POS_OFSET (Offset value set in the set coordinates command (POS_SET))
0003H	TSPD (Target speed)
0004H	SPD_LIM (Speed limit value)
0005H	TRQ_LIM (Torque limit value)
0006H	SV_STAT Monitor byte 1: Current communication phase 00H: Phase 0 01H: Phase 1 02H: Phase 2 03H: Phase 3 byte 2: Current control mode 00H: Position control mode 01H: Speed control mode 02H: Torque control mode byte 3: Reserved byte 4: Expansion signal monitor

bit	Name	Description	Value	Setting
bit 0	LT_RDY1	Processing status for latch detection specified by SVCMD_CTRL.LT_REQ1	0	Latch detection not processed
			1	During latch detection processing
bit 1	LT_RDY1	Processing status for latch detection specified by SVCMD_CTRL.LT_REQ2	0	Latch detection not processed
			1	During latch detection processing
bit 2, bit 3	LT_SEL1R	Latch Signal	0	Phase C
			1	External input signal 1
			2	External input signal 2
			3	External input signal 3
bit 4, bit 5	LT_SEL2R	Latch Signal	0	Phase C
			1	External input signal 1
			2	External input signal 2
			3	External input signal 3
bit 6	Reserved (0)			

0007H	Reserved	
0008H	INIT_PGPOS (Low)	64-bit data for the initial encoder value converted to a command value (lower 32 bits)
0009H	INIT_PGPOS (High)	64-bit data for the initial encoder value converted to a command value (higher 32 bits)

Parameter No.	Size	Name		Setting Range	Units [Resolution]	Factory Setting	Enabled Timing	Category
8A (PnB14)	4	Monitor Select for SEL_MON2 (CMN2)		0 to 6	–	0	Immediately	Command Related Parameters
		0000H to 0006H	Same as Monitor Selection for SEL_MON1.					
8B (PnB16)	4	Origin Detection Range		0 to 250	1 reference unit	10	Immediately	
8C (PnB18)	4	Forward Torque Limit		0 to 800	%	100	Immediately	
8D (PnB1A)	4	Reverse Torque Limit		0 to 800	%	100	Immediately	
8E (PnB1C)	4	Zero Speed Detection Range		1000 to 10000000	10^{-3} min^{-1}	20000	Immediately	
8F (PnB1E)	4	Speed Coincidence Signal Output Width		0 to 100000	10^{-3} min^{-1}	10000	Immediately	
90 (PnB20)	4	Servo Command Control Field Enabled/Disabled (read only)		–	–	0FFF3F3FH	–	
		bit 0	CMD_PAUSE (1: Enabled)					
		bit 1	CMD_CANCEL (1: Enabled)					
		bit 2, 3	STOP_MODE (1: Enabled)					
		bit 4, 5	ACCFIL (1: Enabled)					
		bit 6, 7	Reserved (0: Disabled)					
		bit 8	LT_REQ1 (1: Enabled)					
		bit 9	LT_REQ2 (1: Enabled)					
		bit 10, 11	LT_SEL1 (1: Enabled)					
		bit 12, 13	LT_SEL2 (1: Enabled)					
		bit 14, 15	Reserved (0: Disabled)					
		bit 16 to 19	SEL_MON1 (1: Enabled)					
		bit 20 to 23	SEL_MON2 (1: Enabled)					
		bit 24 to 27	SEL_MON3 (1: Enabled)					
		bit 28 to 31	Reserved (0: Disabled)					

Parameter No.	Size	Name		Setting Range	Units [Resolution]	Factory Setting	Enabled Timing	Category
91 (PnB22)	4	Servo Command Status Field Enabled/Disabled (read only)		–	0	0FFF3F33H	–	Command Related Parameters
		bit 0	CMD_PAUSE_CMP (1: Enabled)					
		bit 1	CMD_CANCEL_CMP (1: Enabled)					
		bit 2, 3	Reserved (0: Disabled)					
		bit 4, 5	ACCFIL (1: Enabled)					
		bit 6, 7	Reserved (0: Disabled)					
		bit 8	L_CMP1 (1: Enabled)					
		bit 9	L_CMP2 (1: Enabled)					
		bit 10	POS_RDY (1: Enabled)					
		bit 11	PON (1: Enabled)					
		bit 12	M_RDY (1: Enabled)					
		bit 13	SV_ON (1: Enabled)					
		bit 14, 15	Reserved (0: Disabled)					
		bit 16 to 19	SEL_MON1 (1: Enabled)					
		bit 20 to 23	SEL_MON2 (1: Enabled)					
		bit 24 to 27	SEL_MON3 (1: Enabled)					
		bit 28 to 31	Reserved (0: Disabled)					
92 (PnB24)	4	I/O Bit Enabled/Disabled (Output) (read only)		–	–	007F01F0H	–	
		bit 0 to 3	Reserved (0: Disabled)					
		bit 4	V_PPI (1: Enabled)					
		bit 5	P_PPI (1: Enabled)					
		bit 6	P_CL (1: Enabled)					
		bit 7	N_CL (1: Enabled)					
		bit 8	G_SEL (1: Enabled)					
		bit 9 to 11	G_SEL (0: Disabled)					
		bit 12 to 15	Reserved (0: Disabled)					
		bit 16 to 19	BANK_SEL (1: Enabled)					
		bit 20 to 22	SO1 to SO3 (1: Enabled)					
		bit 23	Reserved (0: Disabled)					
		bit 24 to 31	Reserved (0: Disabled)					

Parameter No.	Size	Name		Setting Range	Units [Resolution]	Factory Setting	Enabled Timing	Category
93 (PnB26)	4	I/O Bit Enabled/Disabled (Input) (read only)		–	–	FF0FFEFEH	–	Command Related Parameters
		bit 0	Reserved (0: Disabled)					
		bit 1	DEC (1: Enabled)					
		bit 2	P-OT (1: Enabled)					
		bit 3	N-OT (1: Enabled)					
		bit 4	EXT1 (1: Enabled)					
		bit 5	EXT2 (1: Enabled)					
		bit 6	EXT3 (1: Enabled)					
		bit 7	ESTP (1: Enabled)					
		bit 8	Reserved (0: Disabled)					
		bit 9	BRK_ON (1: Enabled)					
		bit 10	P-SOT (1: Enabled)					
		bit 11	N-SOT (1: Enabled)					
		bit 12	DEN (1: Enabled)					
		bit 13	NEAR (1: Enabled)					
		bit 14	PSET (1: Enabled)					
		bit 15	ZPOINT (1: Enabled)					
		bit 16	T_LIM (1: Enabled)					
		bit 17	V_LIM (1: Enabled)					
		bit 18	V_CMP (1: Enabled)					
		bit 19	ZSPD (1: Enabled)					
		bit 20 to 23	Reserved (0: Disabled)					
		bit 24 to 31	I0_STS1 to 8 (1: Enabled)					

8.27.3 Common Parameters and Corresponding Device Parameters

Common Parameters and Corresponding Device Parameters

Category	Common Parameters	Meaning	Corresponding Device Parameter	Remark
Device Information Related Parameters	1	Encoder Type	–	
	2	Motor Type	–	
	3	Semi-closed/Fully-closed Type	–	
	4	Rated Speed	–	
	5	Maximum Output Speed	–	
	6	Speed Multiplier	–	
	7	Rated Torque	–	
	8	Maximum Output Torque	–	
	9	Torque Multiplier	–	
	0A	Resolution (Rotary)	–	
	0B	Scale Pitch (Linear)	–	
	0C	Pulses per Scale Pitch (Linear)	–	
Machine Specification Related Parameters	21	Electronic Gear Ratio (Numerator)	Pn20E	
	22	Electronic Gear Ratio (Denominator)	Pn210	
	23	Absolute Encoder Origin Offset	Pn808	
	24	Multiturn Limit Setting	Pn205	
	25	Limit Setting	Pn50A Pn50B Pn801	
	26	Forward Software Limit	Pn804	
	27	Reserved by System	–	
	28	Reverse Software Limit	Pn806	
	29	Reserved by System	–	
Unit System Related Parameters	41	Speed Unit	–	
	42	Speed Base Unit	–	
	43	Position Unit	–	
	44	Position Base Unit	–	
	45	Acceleration Unit	–	
	46	Acceleration Base Unit	–	
	47	Torque Unit	–	
	48	Torque Base Unit	–	
Adjustment Related Parameters	61	Speed Loop Gain	Pn100	
	62	Speed Loop Integral Time Constant	Pn101	
	63	Position Loop Gain	Pn102	
	64	Feedforward Compensation	Pn109	
	65	Position Loop Integral Time Constant	Pn11F	
	66	Positioning Completed Width	Pn522	
	67	NEAR Signal Width	Pn524	

Common Parameters and Corresponding Device Parameters

Category	Common Parameters	Meaning	Corresponding Device Parameter	Remark
Command Related Parameters	81	Exponential Function Accel/Decel Time Constant	Pn811	
	82	Movement Average Time	Pn812	
	83	Final Travel Distance for External Positioning	Pn814	EX_POSING, EX_FEED
	84*1	Homing Approach Speed	Pn817, Pn842	ZRET
	85*2	Homing Creep Speed	Pn818, Pn844	ZRET
	86	Final Travel Distance for Homing	Pn819	ZRET
	87	Monitor Selection 1	–	
	88	Monitor Selection 2	–	
	89	Monitor Select for SEL_MON1	–	
	8A	Monitor Select for SEL_MON2	–	
	8B	Origin Detection Range	Pn803	
	8C	Forward Torque Limit	Pn404	
	8D	Reverse Torque Limit	Pn405	
	8E	Zero Speed Detection Range	Pn502	
	8F	Speed Coincidence Signal Output Width	Pn503	
	90	Servo Command Control Field Enabled/Disabled	–	
	91	Servo Command Status Field Enabled/Disabled	–	
	92	I/O Bit Enabled/Disabled (Output)	–	
	93	I/O Bit Enabled/Disabled (Input)	–	

*1. The common parameter 84 is linked with Pn817 or Pn824. At factory setting, the value of Pn817 is effective. When Pn817 is set to zero or a value outside the allowable range, the value of Pn824 will become effective. After the value of Pn824 become effective, the value stays effective even if the value of Pn817 within the allowable range is set to parameter 84.

*2. The common parameter 85 is linked with Pn818 or Pn844. At factory setting, the value of Pn818 is effective. When Pn818 is set to zero or a value outside the allowable range, the value of Pn844 will become effective. After the value of Pn844 become effective, the value stays effective even if the value of Pn818 within the allowable range is set to parameter 85.

8.28 Virtual Memory Space

The virtual memory space is the memory area that can be accessed by using the read memory command (MEM_RD: 1DH) and write memory command (MEM_WR: 1EH).

By adopting the concept of virtual memory, the memory areas that vary among devices and vendors can be accessed at common addresses.

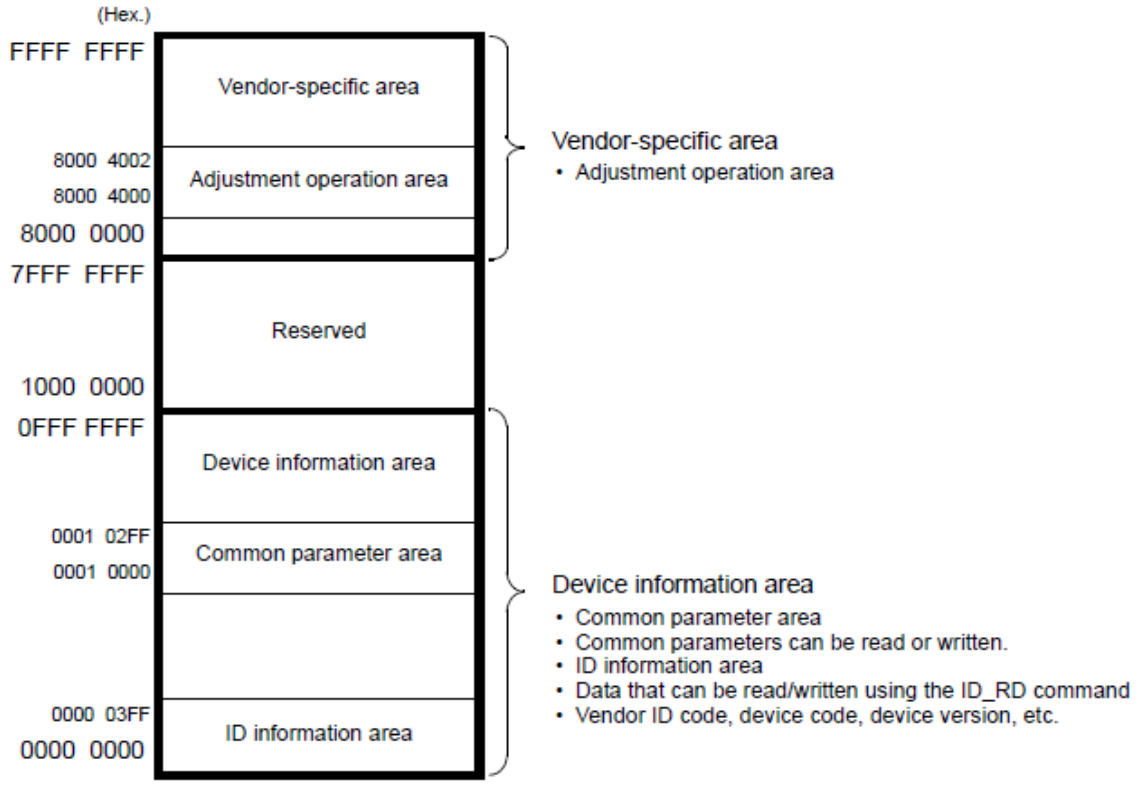

8.29 Information Allocated to Virtual Memory

The ID information, common parameter and adjustment operation areas are allocated to virtual memory.

8.29.1 ID Information Area

When accessing virtual memory using the MEM_RD or MEM_WR command, use virtual memory addresses. The address map is given below.

For details, refer to the ID_CODE value in *8.27.2 Read ID Command (ID_RD: 03H)* that corresponds to the one in the following table.

Data in this area can also be read by using the ID_RD command.

(Hex.)		ID_CODE
0000 00DF	List of Supported Main Commands	30H
0000 00C0		
0000 00BF	Reserved	–
0000 008C		
0000 0084	MAC Address	–
0000 0080	Supported Communication Mode	20H
	Reserved (00000000HEX)	–
	Reserved (00000000HEX)	–
	Profile Type (Current Value)	1DH
0000 0070	Number of Transmission Bytes (Current Value)	1CH
0000 006C	Number of Transmission Bytes	1BH
0000 0068	Maximum Value of Communication Cycle	1AH
0000 0064	Minimum Value of Communication Cycle	19H
0000 0060	Granularity of Transmission Cycle	18H
0000 005C	Maximum Value of Transmission Cycle	17H
0000 0058	Minimum Value of Transmission Cycle	16H
0000 0054	Profile Version 3	15H
0000 0050	Profile Type 3	14H
0000 004C	Profile Version 2	13H
0000 0048	Profile Type 2	12H
0000 0044	Profile Version 1	11H
0000 0040	Profile Type 1	10H
0000 003C	Reserved (00000000HEX)	–
0000 0038	Reserved (00000000HEX)	–
0000 0034	Serial No.	06H
0000 0018		
0000 0014	Supported Extended Address	05H
0000 0010	Device Definition File Version	04H
0000 000C	Device Version	03H
0000 0008	Device Code	02H
0000 0004	Vendor ID Code	01H
0000 0000	Reserved (00000000HEX)	–

(Hex.)		ID_CODE
0000 02BF	Reserved	–
0000 02A0	Sub Device 2 Version	A8H
0000 029F	Sub Device 2 Name	A0H
0000 0280		
0000 027F	Reserved	–
0000 0260	Sub Device 1 Version	98H
0000 025F	Sub Device 1 Name	90H
0000 0240		
0000 023F	Reserved	–
0000 0220		
0000 021F	Main Device Name	80H
0000 0200		
0000 01FF	Reserved	–
0000 0120		
0000 011F	List of Supported Common Parameters	40H
0000 0100		
0000 00FF	List of Supported Subcommands	38H
0000 00E0		

(Hex.)		ID_CODE
0000 3FFF	Reserved	–
0000 03A0	Sub Device 6 Version	E8H
0000 039F	Sub Device 6 Name	E0H
0000 0380		
	Reserved	–
0000 0360	Sub Device 5 Version	D8H
0000 035F	Sub Device 5 Name	D0H
0000 0340		
	Reserved	–
0000 0320	Sub Device 4 Version	C8H
0000 031F	Sub Device 4 Name	C0H
0000 0300		
0000 02FF	Reserved	–
0000 02E0	Sub Device 3 Version	B8H
0000 02DF	Sub Device 3 Name	B0H
0000 02C0		

8.29.2 Common Parameter Area

When accessing virtual memory using the MEM_RD or MEM_WR command, use virtual memory addresses. The address map is given below.

Data in this area can also be read using the SVPRM_RD or SVPRM_WR command.

For details, refer to the common parameter No. in *8.27.2 List of Common Parameters* that corresponds to the one in the following table.

(Hex.)		Common Parameter No.
0001 0124	Supported Unit	49H
0001 0120	Torque Base Unit	48H
0001 011C	Torque Unit	47H
0001 0118	Acceleration Base Unit	46H
0001 0114	Acceleration Unit	45H
0001 0110	Position Base Unit	44H
0001 010C	Position Unit	43H
0001 0108	Speed Base Unit	42H
0001 0104	Speed Unit	41H
0001 0100	Reserved (00000000HEX)	–
0001 00FC 0001 00A4	Reserved (00000000HEX)	–
0001 00A0	Reverse Software Limit	28H
0001 009C	Reserved (00000000HEX)	–
0001 0098	Forward Software Limit	26H
0001 0094	Limit Setting	25H
0001 0090	Multiturn Limit	24H
0001 008C	Absolute Encoder Origin Offset	23H
0001 0088	Electronic Gear Ratio (Denominator)	22H
0001 0084	Electronic Gear Ratio (Numerator)	21H
0001 0080 0001 0034	Reserved (00000000HEX)	–
0001 0030	Pulses per Scale Pitch	0CH
0001 002C	Linear Scale Pitch	0BH
0001 0028	Resolution (Rotary)	0AH
0001 0024	Torque Multiplier	09H
0001 0020	Maximum Output Torque	08H
0001 001C	Rated Torque	07H
0001 0018	Speed Multiplier	06H
0001 0014	Maximum Output Speed	05H
0001 0010	Rated Speed	04H
0001 000C	Semi-closed/Fully-closed Type	03H
0001 0008	Motor Type	02H
0001 0004	Encoder Type	01H
0001 0000	Reserved (00000000HEX)	–

(Hex.)		Common Parameter No.
0001 FFFF 0001 0250	Reserved (00000000HEX)	–
0001 024C	I/O Bit Enabled/Disabled	93H
0001 0248	I/O Bit Enabled/Disabled	92H
0001 0244	SVCMD_STAT field Enabled/Disabled	91H
0001 0240	SVCMD_CTRL field Enabled/Disabled	90H
0001 023C	Speed Coincidence Signal Output Width	8FH
0001 0238	Zero Speed Detection Range	8EH
0001 0234	Reverse Torque Limit	8DH
0001 0230	Forward Torque Limit	8CH
0001 022C	Origin Detection Range	8BH
0001 0228	Monitor Select for SEL_MON2	8AH
0001 0224	Monitor Select for SEL_MON1	89H
0001 0220	Monitor Selection 2	88H
0001 021C	Monitor Selection 1	87H
0001 0218	Final Travel Distance for Homing	86H
0001 0214	Homing Creep Speed	85H
0001 0210	Homing Approach Speed	84H
0001 020C	Final Travel Distance for External Positioning	83H
0001 0208	Movement Average Time	82H
0001 0204	Exponential Function Acceleration/ Deceleration Time Constant	81H
0001 0200	Reserved (00000000HEX)	–
0001 01FC 0001 01A0	Reserved (00000000HEX)	–
0001 019C	NEAR Signal Width	67H
0001 0198	Positioning Completed Width	66H
0001 0194	Position Loop Integral Time Constant	65H
0001 0190	Feedforward Compensation	64H
0001 018C	Position Loop Gain	63H
0001 0188	Speed Loop Integral Time Constant	62H
0001 0184	Speed Loop Gain	61H
0001 0180 0001 0128	Reserved (00000000HEX)	–

8.29.3 Adjustment Operation Area

Use the MEM_RD or MEM_WR command to access this area. The address map is given below.

For the command communication procedure for adjustment operations, refer to *8.13.11 Write Memory Command (MEM_WR: 1EH)*.

Address	Description		Data Size (Byte)	Data Type
8000 4000HEX	Description	The area where the command codes specifying adjustment operations are written		
	Name	Command code	2	Binary Data
8000 4002HEX	Description	The area where commands for preparing or starting adjustment operations are written		
	Name	Start command	2	Binary Data

9 Troubleshooting

9.1 Alarm Displays

The following sections describe troubleshooting in response to alarm displays.
The alarm name, alarm meaning, alarm stopping method, and alarm reset capability are listed in order of the alarm numbers in *9.1.1 List of Alarms*.
The causes of alarms and troubleshooting methods are provided in *9.1.2 Troubleshooting of Alarms*.

"6" of the figure, "B" of the alphabet, and "D" are displayed as follows.

6→  B→  D→ 

9.1.1 List of Alarms

This section provides list of alarms.

After its cause has been removed, the alarm can be deactivated in any of the methods marked ○ in the alarm reset column.

	Alarm Number	Alarm Name	Servo motor Stop ping Method*1	Alarm reset			
				Power OFF ↓ ON	Alarm warning clear command [ALM-CLR]	SigmaWin+ [Alarm] | [Display Alarm] | Reset button	SigmaWin+ [Setup] | [Software Reset] | Execute button
Alarm	A.020	Parameter Checksum Error 1	Gr.1	○	–	–	○
	A.021	Parameter Format Error 1	Gr.1	○	–	–	○
	A.022	System Checksum Error 1	Gr.1	○	–	–	○
	A.030	Main Circuit Detector Error	Gr.1	○	○	○	○
	A.040	Parameter Setting Error 1	Gr.1	○	–	–	○
	A.041	Encoder Output Pulse Setting Error	Gr.1	○	–	–	○
	A.042	Parameter Combination Error	Gr.1	○	–	–	○
	A.044	Semi-closed/Fully-closed Loop Control Parameter Setting Error	Gr.1	○	–	–	○
	A.04A	Parameter Setting Error 2	Gr.1	○	–	–	○
	A.050	Combination Error	Gr.1	○	○	○	○
	A.051	Unsupported Device Alarm	Gr.1	○	–	–	○
	A.0B0	Cancelled Servo ON Command Alarm	Gr.1	○	○	○	○
	A.100	Overcurrent or Heat Sink Overheated	Gr.1	○	–	–	○
	A.300	Regeneration Error	Gr.1	○	○	○	○
	A.320	Regenerative Overload	Gr.2	○	○	○	○
	A.330	Main Circuit Power Supply Wiring Error	Gr.1	○	○	○	○
	A.400	Overvoltage	Gr.1	○	○	○	○
	A.410	Undervoltage	Gr.2	○	○	○	○
	A.450	Main-Circuit Capacitor Overvoltage	Gr.1	○	–	–	○
	A.510	Overspeed	Gr.1	○	○	○	○
	A.511	Overspeed of Encoder Output Pulse Rate	Gr.1	○	○	○	○
	A.520	Vibration Alarm	Gr.1	○	○	○	○
	A.521	Autotuning Alarm	Gr.1	○	○	○	○
	A.710	Overload: High Load	Gr.2	○	○	○	○
	A.720	Overload: Low Load	Gr.1	○	○	○	○
	A.730	Dynamic Brake Overload	Gr.1	○	○	○	○
	A.731	Overload of Surge Current Limit Resistor	Gr.1	○	○	○	○
	A.740	Heat Sink Overheated	Gr.1	○	○	○	○
	A.7A0	Built-in Fan in DRIVER Stopped	Gr.1	○	○	○	○
	A.7AB	Encoder Backup Error	Gr.1	○	○	○	○
	A.810	Encoder Checksum Error	Gr.1	○	–	–	○
	A.820	Absolute Encoder Battery Error	Gr.1	○	–	–	○
	A.830	Encoder Data Error	Gr.1	○	○	○	○
	A.840	Encoder Overspeed	Gr.1	○	–	–	○
	A.850	Encoder Overheated	Gr.1	○	–	–	○
	A.860	External Encoder Error	Gr.1	○	–	–	○
	A.8A0	External Encoder Error of Module	Gr.1	○	○	○	○
	A.8A1	External Encoder Error of Sensor	Gr.1	○	○	○	○
	A.8A2	External Encoder Error of Position	Gr.1	○	○	○	○
	A.8A3	External Encoder Overspeed	Gr.1	○	○	○	○
	A.8A5	External Encoder Overheated	Gr.1	○	○	○	○
	A.8A6	Regeneration Error	Gr.1	○	○	○	○
	A.B31	Current Detection Error 1	Gr.1	○	–	–	○

(cont'd)

	Alarm Number	Alarm Name	Servo motor Stop ping Method*1	Alarm reset			
				Power OFF ↓ ON	Alarm warning clear command [ALM-CLR]	SigmaWin+ [Alarm] | [Display Alarm] | Reset button	SigmaWin+ [Setup] | [Software Reset] | Execute button
Alarm	A.B32	Current Detection Error 2	Gr.1	○	–	–	○
	A.B33	Current Detection Error 3	Gr.1	○	–	–	○
	A.B6A	MECHATROLINK Communications ASIC Error 1	Gr.1	○	–	–	○
	A.B6B	MECHATROLINK Communications ASIC Error 2	Gr.2	○	–	–	○
	A.BF0	System Alarm 0	Gr.1	○	–	–	○
	A.BF1	System Alarm 1	Gr.1	○	–	–	○
	A.BF2	System Alarm 2	Gr.1	○	–	–	○
	A.BF3	System Alarm 3	Gr.1	○	–	–	○
	A.BF4	System Alarm 4	Gr.1	○	–	–	○
	A.C10	Servo Overrun Detected	Gr.1	○	○	○	○
	A.C80	Absolute Encoder Clear Error and Multiturn Limit Setting Error	Gr.1	○	–	–	○
	A.C90	Encoder Communications Error	Gr.1	○	–	–	○
	A.C91	Encoder Communications Position Data Error	Gr.1	○	–	–	○
	A.C92	Encoder Communications Timer Error	Gr.1	○	–	–	○
	A.CA0	Encoder Parameter Error	Gr.1	○	–	–	○
	A.CB0	Encoder Echoback Error	Gr.1	○	–	–	○
	A.CC0	Multiturn Limit Disagreement	Gr.1	○	–	–	○
	A.CF1	Feedback Option Module Communications Error (Reception error)	Gr.1	○	–	–	○
	A.CF2	Feedback Option Module Communications Error (Timer stop)	Gr.1	○	–	–	○
	A.D00	Position Error Overflow	Gr.1	○	○	○	○
	A.D01	Position Error Overflow Alarm at Servo ON	Gr.1	○	○	○	○
	A.D02	Position Error Overflow Alarm by Speed Limit at Servo ON	Gr.2	○	○	○	○
	A.D10	Motor-load Position Error Overflow	Gr.2	○	○	○	○
	A.E02	MECHATROLINK Internal Synchronization Error 1	Gr.1	○	○	○	○
	A.E40	MECHATROLINK Transmission Cycle Setting Error	Gr.2	○	○	○	○
	A.E41	MECHATROLINK Communications Data Size Setting Error	Gr.2	○	○	○	○
	A.E42	MECHATROLINK Station Address Setting Error	Gr.2	○	–	–	○
	A.E50	MECHATROLINK Synchronization Error	Gr.2	○	○	○	○
	A.E51	MECHATROLINK Synchronization Failed	Gr.2	○	○	○	○
	A.E60	MECHATROLINK Communications Error (Reception error)	Gr.2	○	○	○	○
	A.E61	MECHATROLINK Transmission Cycle Error (Synchronization interval error)	Gr.2	○	○	○	○
	A.E62	MECHATROLINK Communications Error (FCS error)	Gr.2	○	○	○	○
	A.E63	MECHATROLINK Synchronization Frame Not Received Alarm	Gr.2	○	○	○	○
	A.E71	Safety Option Module Detection Failure	Gr.1	○	–	–	○
	A.E72	Feedback Option Module Detection Failure	Gr.1	○	–	–	○
	A.E74	Unsupported Safety Option Module	Gr.1	○	–	–	○
	A.E75	Unsupported Feedback Option Module	Gr.1	○	–	–	○
	A.EA2	DRV Alarm 2 (DRIVER WDC error)	Gr.2	○	○	○	○
	A.EB1	Safety Function Signal Input Timing Error	Gr.1	○	–	–	○
	A.ED1	Command Execution Timeout	Gr.2	○	○	○	○
	A.F10	Main Circuit Cable Open Phase	Gr.2	○	○	○	○
	FL-1*2	System Alarm	-	○	–	–	–
	FL-2*2		-	○	–	–	–
	CPF00	Digital Operator Transmission Error 1	-	○	–	–	–
	CPF01	Digital Operator Transmission Error 2	-	○	–	–	–
	A.--	Not an error	-	–	–	–	–

*1 Gr.1: The servomotor is stopped according to the setting in Pn001.0 if an alarm occurs. Pn001.0 is factory-set to stop the servomotor by applying the DB.

Gr.2: The servomotor is stopped according to the setting in Pn00B.1 if an alarm occurs. Pn00B.1 is factory-set to stop the servomotor by setting the speed reference to "0." The servomotor under torque control will always use the Gr.1 method to stop. By setting Pn00B.1 to 1, the servomotor stops using the same method as Gr.1. When coordinating a number of servomotors, use this stopping method to prevent machine damage that may result due to differences in the stop method.

*2 These alarms are not stored in the alarm history and are displayed only in the panel display.

9.1.2 Troubleshooting of Alarms

If an error occurs in servo drives, an alarm display such as A.□□□ and CPF□□ will appear on the panel display.

Refer to the following table to identify the cause of an alarm and the action to be taken.

AlarmNumber: Alarm Name (Alarm Description)	Cause	Investigative Actions	Corrective Actions
A.020: Parameter Checksum Error 1 (The parameter data in the DRIVER is incorrect.)	The power supply voltage suddenly dropped.	Measure the power supply voltage.	Set the power supply voltage within the specified range, and set Fn005 to initialize the parameter.
	The power supply went OFF while changing a parameter setting.	Check the circumstances when the power supply went OFF.	Set Fn005 to initialize the parameter and then set the parameter again.
	The number of times that parameters were written exceeded the limit.	Check to see if the parameters were frequently changed through the host PC or PLC...etc.	The DRIVER may be faulty. Replace the DRIVER. Reconsider the method of writing parameters.
	Malfunction caused by noise from the AC power supply or grounding line, static electricity noise, etc.	Turn the power supply ON and OFF several times. If the alarm still occurs, there may be noise interference.	Take countermeasures against noise.
	Gas, water drops, or cutting oil entered the DRIVER and caused failure of the internal components.	Check the installation conditions.	The DRIVER may be faulty. Replace the DRIVER.
	A DRIVER fault occurred.	Turn the power supply ON and OFF several times. If the alarm still occurs, the DRIVER may be faulty.	The DRIVER may be faulty. Replace the DRIVER.
A.021: Parameter Format Error 1 (The parameter data in the DRIVER is incorrect.)	The software version of DRIVER that caused the alarm is older than that of the written parameter.	Check Fn012 to see if the set software version agrees with that of the DRIVER. If not, an alarm may occur.	Write the parameter of another DRIVER of the same model with the same software version. Then turn the power OFF and then ON again.
	A DRIVER fault occurred.	–	The DRIVER may be faulty. Replace the DRIVER.
A.022: System Checksum Error 1 (The parameter data in the DRIVER is incorrect.)	The power supply voltage suddenly dropped.	Measure the power supply voltage.	The DRIVER may be faulty. Replace the DRIVER.
	The power supply went OFF while setting an utility function.	Check the circumstances when the power supply went OFF.	The DRIVER may be faulty. Replace the DRIVER.
	A DRIVER fault occurred.	Turn the power supply ON and OFF several times. If the alarm still occurs, the DRIVER may be faulty.	The DRIVER may be faulty. Replace the DRIVER.
A.030: Main Circuit Detector Error	A DRIVER fault occurred.	–	The DRIVER may be faulty. Replace the DRIVER.
A.040: Parameter Setting Error 1 (The parameter setting was out of the setting range.)	The DRIVER and servomotor capacities do not match each other.	Check the combination of DRIVER and servomotor capacities.	Select the proper combination of DRIVER and servomotor capacities.
	A DRIVER fault occurred.	–	The DRIVER may be faulty. Replace the DRIVER.
	The parameter setting is out of the setting range.	Check the setting ranges of the parameters that have been changed.	Set the parameter to a value within the setting range.
	The electronic gear ratio is out of the setting range.	Check the electronic gear ratio. The ratio must satisfy: 0.001< (Pn20E/Pn210) < 4000.	Set the electronic gear ratio in the range: 0.001< (Pn20E/Pn210) < 4000.

(cont'd)

Alarm Number: Alarm Name (Alarm Description)	Cause	Investigative Actions	Corrective Actions
A.041: Encoder Output Pulse Setting Error	The encoder output pulse (Pn212) is out of the setting range and does not satisfy the setting conditions.	Check the parameter Pn212.	Set Pn212 to a correct value.
A.042:*1 Parameter Combination Error	The speed of program JOG operation (Fn004) is lower than the setting range after having changed the electronic gear ratio (Pn20E/Pn210) or the servomotor.	Check if the detection conditions*1 are satisfied.	Decrease the setting of the electronic gear ratio (Pn20E/Pn210).
	The speed of program JOG operation (Fn004) is lower than the setting range after having changed the setting of the pro- gram JOG movement speed (Pn533).	Check if the detection conditions*1 are satisfied.	Increase the setting of the program JOG movement speed (Pn533).
	The moving speed of advanced autotuning is lower than the setting range after having changed the electronic gear ratio (Pn20E/ Pn210) or the servomotor.	Check if the detection conditions*1 are satisfied.	Decrease the setting of the electronic gear ratio (Pn20E/Pn210).
A.044: Semi-closed/Fully-closed Loop Control Parameter Setting Error	The setting of the fully-closed module does not match with that of Pn002.3.	Check the settings of Pn002.3.	The setting of fully-closed module must be compatible with the setting of Pn002.3.
A.04A: Parameter Setting Error 2	For a 4-byte parameter bank, no registration in two consecutive bytes for two bank members.	–	Change the number of bytes for bank members to an appropriate value.
	The total amount of bank data exceeds 64. (Pn900 × Pn901 > 64)	–	Reduce the total amount of bank data to 64 or less.
A.050: Combination Error (The DRIVER and servomotor capacities do not correspond.)	The DRIVER and servomotor capacities do not match each other.	Check the capacities to see if they satisfy the following condition: (1/4) ≦(Servomotor capacity / DRIVER capacity ≦4)	Select the proper combination of DRIVER and servomotor capacities.
	An encoder fault occurred.	Replace the servomotor and see if the alarm occurs again.	Replace the servomotor (encoder).
	A DRIVER fault occurred.	–	The DRIVER may be faulty. Replace the DRIVER.
A.051: Unsupported Device Alarm	An unsupported serial converter unit, encoder, or external encoder is connected to the DRIVER.	Check the product specifications, and select the correct model.	Select the correct combination of units.
A.0b0: Cancelled Servo ON Command Alarm	After executing the utility function to turn ON the power to the motor, the servo ON command (SV_ON) was sent from the host PC or PLC...etc.	–	Turn the DRIVER power sup- ply OFF and then ON again or exe- cute a software reset.

∗1. Detection conditions

If one of the following conditions detected, an alarm occurs.

- $\text{Pn533 [min}^{-1}] \times \dfrac{\text{Encoder resolution}}{6 \times 10^5} \leq \dfrac{\text{Pn20E}}{\text{Pn210}}$
- $\text{Max Motor Speed [min}^{-1}] \times \dfrac{\text{Encoder resolution}}{\text{About } 3.66 \times 10^{12}} \geq \dfrac{\text{Pn20E}}{\text{Pn210}}$

(cont'd)

Alarm Number: Alarm Name (Alarm Description)	Cause	Investigative Actions	Corrective Actions
A.100: Overcurrent or Heat Sink Overheated (An overcurrent flowed through the IGBT or heat sink of DRIVER overheated.)	Incorrect wiring or contact fault of main circuit cables.	Check the wiring. Refer to *3.1 Main Circuit Wiring.*	Correct the wiring.
	Short-circuit or ground fault of main circuit cables.	Check for short-circuits across the servomotor terminal phases U, V, and W, or between the grounding and servomotor terminal phases U, V, or W. Refer to *3.1 Main Circuit Wiring*.	The cable may be short-circuited. Replace the cable.
	Short-circuit or ground fault inside the servomotor.	Check for short-circuits across the servomotor terminal phases U, V, and W, or between the grounding and servomotor terminal phases U, V, or W. Refer to *3.1 Main Circuit Wiring*.	The servomotor may be faulty. Replace the servomotor.
	Short-circuit or ground fault inside the DRIVER.	Check for short-circuits across the servomotor connection terminals U, V, and W on the DRIVER, or between the grounding and terminal U, V, or W. Refer to *3.1 Main Circuit Wiring.*	The DRIVER may be faulty. Replace the DRIVER.
	Incorrect wiring or contact fault of the regenerative resistor.	Check the wiring. Refer to *3.7 Connecting Regenerative Resistors*.	Correct the wiring.
	The dynamic brake (DB: Emergency stop executed from the DRIVER) was frequently activated, or the DB overload alarm occurred.	Check the power consumed by DB resistance (Un00B) to see how many times the DB has been used. Or, check the alarm history display Fn000 to see if the DB overload alarm A.730 or A.731 was reported.	Change the DRIVER model, operating conditions, or the mechanism so that the DB does not need to be used so frequently.
	The generated regenerative resistor value exceeded the DRIVER regenerative energy processing capacity.	Check the regenerative load ratio (Un00A) to see how many times the regenerative resistor has been used.	Check the operating condition including overload, and reconsider the regenerative resistor value.
	The DRIVER regenerative resistance is too small.	Check the regenerative load ratio (Un00A) to see how many times the regenerative resistor has been used.	Change the regenerative resistance value to a value larger than the DRIVER minimum allowable resistance value.
	A heavy load was applied while the servomotor was stopped or running at a low speed.	Check to see if the operating conditions are outside servo drive specifications.	Reduce the load applied to the servomotor or increase the operating speed.
	Malfunction caused by noise interference.	Improve the wiring or installation environment, such as by reducing noise, and check to see if the alarm recurs.	Take countermeasures for noise, such as correct wiring of the FG. Use an FG wire size equivalent to the DRIVER main circuit wire size.
	A DRIVER fault occurred.	–	Turn the power supply OFF and then ON again. If the alarm still occurs, the DRIVER may be faulty. Replace the DRIVER.

(cont'd)

Alarm Number: Alarm Name (Alarm Description)	Cause	Investigative Actions	Corrective Actions
A.300: Regeneration Error	Regenerative resistor capacity (Pn600) is set to a value other than 0 for a LECYU2-V5, V7, and V8, and a regenerative resistor is notconnected.	Check the regenerative resistor connection and the value of the Pn600.	Connect the regenerative resistor, or set Pn600 to 0 if no regenerative resistor is required.
	The jumper between the power supply terminals B2 and B3 is removed for the DRIVERs other than the DRIVERs shown above.	Confirm that a jumper is mounted between the power supply terminals B2 and B3.	Correctly mount a jumper.
	The regenerative resistor is incorrectly wired, or is removed or disconnected.	Check the regenerative resistor connection.	Correctly connect the regenerative resistor.
	A DRIVER fault occurred.	–	While the main circuit power supply is OFF, turn the control power supply OFF and then ON again. If the alarm still occurs, the DRIVER may be faulty. Replace the DRIVER.
A.320: Regenerative Over-load	The power supply voltage exceeds the specified limit.	Measure the power supply voltage.	Set the power supply voltage within the specified range.
	Insufficient external regenerative resistance, regenerative resistor capacity, or DRIVER capacity. Or, regenerative power has been continuously flowing back.	Check the operating condition or the capacity.	Change the regenerative resistance, regenerative resistor capacity, or DRIVER capacity. Reconsider the operating conditions.
	Regenerative power continuously flowed back because negative load was continuously applied.	Check the load applied to the servo-motor during operation.	Reconsider the system including servo, machine, and operating conditions.
	The setting of parameter Pn600 is smaller than the regenerative resistor's capacity.	Check the regenerative resistor connection and the value of the Pn600.	Set the Pn600 to a correct value.
	The external regenerative resistance is too high.	Check the regenerative resistance.	Change the regenerative resistance to a correct value or use an regenerative resistor of appropriate capacity.
	A DRIVER fault occurred.	–	The DRIVER may be faulty. Replace the DRIVER.

(cont'd)

Alarm Number: Alarm Name (Alarm Description)	Cause	Investigative Actions	Corrective Actions
A.330: Main Circuit Power Supply Wiring Error (Detected when the power to the main circuit is turned ON.)	The regenerative resistor disconnected when the DRIVER power supply voltage was high.	Measure the resistance of the regenerative resistor using a measuring instrument.	When using a regenerative resistor built in the DRIVER: Replace the DRIVER. When using an regenerative option: Replace the regenerative option.
	In the AC power input mode, DC power was supplied.	Check the power supply to see if it is a DC power supply.	Correct the settings to match the actual power supply specifications.
	In the DC power input mode, AC power was supplied.	Check the power supply to see if it is an AC power supply.	Correct the settings to match the actual power supply specifications.
	Regenerative resistor capacity (Pn600) is set to a value other than 0 for a LECYU2-V5, V7, and V8, and an regenerative option is not connected.	Check the regenerative option connection and the value of the Pn600.	Connect the regenerative option, or set Pn600 to 0 if no regenerative resistor is required.
	The jumper between the power supply terminals B2 and B3 is removed for the DRIVERs other than the DRIVERs shown above.	Confirm that a jumper is mounted between the power supply terminals B2 and B3.	Correctly mount a jumper.
	A DRIVER fault occurred.	–	The DRIVER may be faulty. Replace the DRIVER.
A.400: Overvoltage (Detected in the DRIVER main circuit power supply section.)	- For 200-VAC DRIVERs: The AC power supply voltage exceeded 290 V. - For 200-VAC DRIVERs: with DC power supply input: The DC power supply voltage exceeded 410 V.	Measure the power supply voltage.	Set AC/DC power supply voltage within the specified range.
	The power supply is unstable, or was influenced by a lightning surge.	Measure the power supply voltage.	Improve the power supply conditions by installing a surge absorber, etc. Then, turn the power supply OFF and ON again. If the alarm still occurs, the DRIVER may be faulty. Replace the DRIVER.
	Voltage for AC power supply was too high during acceleration or deceleration.	Check the power supply voltage and the speed and torque during operation.	Set AC power supply voltage within the specified range.
	The external regenerative resistance is too high for the actual operating conditions.	Check the operating conditions and the regenerative resistance.	Select a regenerative resistance value appropriate for the operating conditions and load.
	The moment of inertia ratio exceeded the allowable value.	Confirm that the moment of inertia ratio is within the allowable range.	Increase the deceleration time, or reduce the load.
	A DRIVER fault occurred.	–	Turn the control power OFF and then ON again while the main circuit power supply is OFF. If the alarm still occurs, the DRIVER may be faulty. Replace the DRIVER.

(cont'd)

Alarm Number: Alarm Name (Alarm Description)	Cause	Investigative Actions	Corrective Actions
A.410: Undervoltage (Detected in the DRIVER main circuit power supply section.)	- For 200-VAC DRIVERs: The AC power supply voltage is 120 V or less.	Measure the power supply voltage.	Set the power supply voltage within the specified range.
	The power supply voltage dropped during operation.	Measure the power supply voltage.	Increase the power supply capacity.
	Occurrence of instantaneous power interruption.	Measure the power supply voltage.	When the instantaneous power cut hold time (Pn509) is set, decrease the setting.
	The DRIVER fuse is blown out.	–	Replace the DRIVER, connect a reactor, and run the DRIVER.
	A DRIVER fault occurred.	–	The DRIVER may be faulty. Replace the DRIVER.
A.450: Main-Circuit Capacitor Overvoltage	A DRIVER fault occurred.	–	Replace the DRIVER.
A.510: Overspeed (The servomotor speed exceeds the maximum.)	The order of phases U, V, and W in the servomotor wiring is incorrect.	Check the motor wiring.	Confirm that the servomotor is correctly wired.
	A reference value exceeding the overspeed detection level was input.	Check the input value.	Reduce the reference value or adjust the gain.
	The motor speed exceeded the maximum.	Check the motor speed waveform.	Reduce the speed reference input gain, adjust the servo gain, or reconsider the operating conditions.
	A DRIVER fault occurred.	–	The DRIVER may be faulty. Replace the DRIVER.
A.511: Overspeed of Encoder Output Pulse Rate	The encoder output pulse frequency exceeded the limit.	Check the encoder output pulse setting.	Decrease the setting of the encoder output pulse (Pn212).
	The encoder output pulse output frequency exceeded the limit because the motor speed was too high.	Check the encoder output pulse output setting and motor speed.	Decrease the motor speed.
A.520: Vibration Alarm	Abnormal vibration was detected at the motor speed.	Check for abnormal noise from the servomotor, and check the speed and torque waveforms during operation.	Reduce the motor speed or reduce the speed loop gain (Pn100).
	The moment of inertia ratio (Pn103) value is greater than the actual value or is greatly changed.	Check the moment of inertia ratio.	Set the moment of inertia ratio (Pn103) to an appropriate value.
A.521: Autotuning Alarm (Vibration was detected while executing the one-parameter tuning, Easy-FFT, or tuning-less function.)	The servomotor vibrated considerably while performing tuning- less function.	Check the motor speed waveform.	Reduce the load so that the moment of inertia ratio falls within the allowable value, or raise the load level using the tuning-less levels setting (Fn200) or reduce the rigidity level.
	The servomotor vibrated considerably during one-parameter tuning or EasyFFT.	Check the motor speed waveform.	Check the operation procedure of corresponding function and take a corrective action.

(cont'd)

Alarm Number: Alarm Name (Alarm Description)	Cause	Investigative Actions	Corrective Actions
A.710: A.720: Overload A.710: High Load A.720: Low Load	Incorrect wiring or contact fault of servomotor and encoder.	Check the wiring.	Confirm that the servomotor and encoder are correctly wired.
	Operation beyond the overload protection characteristics.	Check the servomotor overload characteristics and executed run command.	Reconsider the load conditions and operating conditions. Or, increase the motor capacity.
	Excessive load was applied during operation because the servomotor was not driven due to mechanical problems.	Check the executed operation reference and motor speed.	Remove the mechanical problems.
	A DRIVER fault occurred.	–	The DRIVER may be faulty. Replace the DRIVER.
A.730: A.731: Dynamic Brake Over-load (An excessive power consumption of dynamic brake was detected.)	The servomotor rotates because of external force.	Check the operation status.	Take measures to ensure the servo-motor will not rotate because of external force.
	The rotating energy at a DB stop exceeds the DB resistance capacity.	Check the power consumed by DB resistance (Un00B) to see how many times the DB has been used.	Reconsider the following: - Reduce the motor reference speed. - Reduce the moment of inertia ratio. - Reduce the number of times of the DB stop operation.
	A DRIVER fault occurred.	–	The DRIVER may be faulty. Replace the DRIVER.
A.740: Overload of Surge Current Limit Resistor (The main circuit power is turned ON/OFF too frequently.)	The inrush current limit resistor operation frequency at the main circuit power supply ON/OFF operation exceeds the allowable range.	–	Reduce the frequency of turning the main circuit power supply ON/OFF.
	A DRIVER fault occurred.	–	The DRIVER may be faulty. Replace the DRIVER.
A.7A0 : Heat Sink Overheated (Detected when the heat sink temperature exceeds 100˚C.)	The surrounding air temperature is too high.	Check the surrounding air temperature using a thermostat.	Decrease the surrounding air temperature by improving the DRIVER installation conditions.
	The overload alarm has been reset by turning OFF the power too many times.	Check the alarm history display (Fn000) to see if the overload alarm was reported.	Change the method for resetting the alarm.
	Excessive load or operation beyond the regenerative energy processing capacity.	Check the accumulated load ratio (Un009) to see the load during operation, and the regenerative load ratio (Un00A) to see the regenerative energy processing capacity.	Reconsider the load and operating conditions.
	Incorrect DRIVER installation orientation or/and insufficient space around the DRIVER.	Check the DRIVER installation conditions.	Install the DRIVER correctly as specified.
	A DRIVER fault occurred.	–	The DRIVER may be faulty. Replace the DRIVER.
A.7AB: Built-in Fan in DRIVER Stopped	The fan inside the DRIVER stopped.	Check for foreign matter or debris inside the DRIVER.	Remove foreign matter or debris from the DRIVER. If the alarm still occurs, the DRIVER may be faulty. Replace the DRIVER.

(cont'd)

Alarm Number: Alarm Name (Alarm Description)	Cause	Investigative Actions	Corrective Actions
A.810: Encoder Backup Error (Only when an absolute encoder is connected.) (Detected on the encoder side.)	Alarm occurred when the power to the absolute encoder was initially turned ON.	Check to see if the power was turned ON initially.	Set up the encoder (Fn008).
	The encoder cable disconnected, and connected again.	Check to see if the power was turned ON initially.	Confirm the connection and set up the encoder (Fn008).
	The power from both the control power supply (+5 V) from the DRIVER and the battery power supply is not being sup- plied.	Check the encoder connector battery or the connector contact status.	Replace the battery or take similar measures to supply power to the encoder, and set up the encoder (Fn008).
	An absolute encoder fault occurred.	–	If the alarm cannot be reset by set-ting up the encoder again, replace the servomotor.
	A DRIVER fault occurred.	–	The DRIVER may be faulty. Replace the DRIVER.
A.820: Encoder Checksum Error (Detected on the encoder side.)	An encoder fault occurred.	–	Set up the encoder again using Fn008. If the alarm still occurs, the servomotor may be faulty. Replace the servomotor.
	A DRIVER fault occurred.	–	The DRIVER may be faulty. Replace the DRIVER.
A.830: Absolute Encoder Battery Error (The absolute encoder battery voltage is lower than the specified value.)	The battery connection is incorrect.	Check the battery connection.	Reconnect the battery.
	The battery voltage is lower than the specified value 2.7 V.	Measure the battery voltage.	Replace the battery.
	A DRIVER fault occurred.	–	The DRIVER may be faulty. Replace the DRIVER.
A.840: Encoder Data Error (Detected on the encoder side.)	An encoder malfunctioned.	–	Turn the power supply OFF and then ON again. If the alarm still occurs, the servomotor may be faulty. Replace the servomotor.
	Malfunction of encoder because of noise interference, etc.	–	Correct the wiring around the encoder by separating the encoder cable from the motor cable or by checking the grounding and other wiring.
A.850: Encoder Overspeed (Detected when the control power supply was turned ON.) (Detected on the encoder side.)	The servomotor speed is higher than 200 min^{-1} when the control power supply was turned ON.	Check the motor rotating speed (Un000) to confirm the servomotor speed when the power is turned ON.	Reduce the servomotor speed to a value less than 200 min^{-1}, and turn ON the control power supply.
	An encoder fault occurred.	–	Turn the power supply OFF and then ON again. If the alarm still occurs, the servomotor may be faulty. Replace the servomotor.
	A DRIVER fault occurred.	–	Turn the power supply OFF and then ON again. If the alarm still occurs, the DRIVER may be faulty. Replace the DRIVER.

(cont'd)

Alarm Number: Alarm Name (Alarm Description)	Cause	Investigative Actions	Corrective Actions
A.860: Encoder Overheated (Only when an absolute encoder is connected.) (Detected on the encoder side.)	The ambient operating temperature around the servomotor is too high.	Measure the ambient operating temperature around the servomotor.	The ambient operating temperature must be 40˚C or less.
	The motor load is greater than the rated load.	Check the accumulated load ratio (Un009) to see the load.	The motor load must be within the specified range.
	An encoder fault occurred.	–	Turn the power supply OFF and then ON again. If the alarm still occurs, the servomotor may be faulty. Replace the servomotor.
	A DRIVER fault occurred.	–	Turn the power supply OFF and then ON again. If the alarm still occurs, the DRIVER may be faulty. Replace the DRIVER.
A.8A0: External Encoder Error	Setting the zero point position of external absolute encoder failed because the servomotor rotated.	Before setting the zero point position, use the fully-closed feedback pulse counter (Un00E) to confirm that the servomotor is not rotating.	The servomotor must be stopped while setting the zero point position.
	An external encoder fault occurred.	–	Replace the external encoder.
A.8A1: External Encoder Error of Module	An external encoder fault occurred.	–	Replace the external encoder.
	A serial converter unit fault occurred.	–	Replace the serial converter unit.
A.8A2: External Encoder Error of Sensor (Incremental)	An external encoder fault occurred.	–	Replace the external encoder.
A.8A3: External Encoder Error of Position (Absolute)	An external absolute encoder fault occurred.	–	The external absolute encoder may be faulty. Refer to the encoder manufacturer's instruction manual for corrective actions.
A.8A5: External Encoder Overspeed	The overspeed from the external encoder occurred.	Check the maximum speed of the external encoder.	Keep the external encoder below its maximum speed.
A.8A6: External Encoder Overheated	The overheat from the external encoder occurred.	–	Replace the external encoder.
A.b31: Current Detection Error 1	The current detection circuit for phase U is faulty.	–	Turn the power supply OFF and then ON again. If the alarm still occurs, the DRIVER may be faulty. Replace the DRIVER.
A.b32: Current Detection Error 2	The current detection circuit for phase V is faulty.	–	Turn the power supply OFF and then ON again. If the alarm still occurs, the DRIVER may be faulty. Replace the DRIVER.
A.b33: Current Detection Error 3	The detection circuit for the current is faulty.	–	Turn the power supply OFF and then ON again. If the alarm still occurs, the DRIVER may be faulty. Replace the DRIVER.
	The motor cable is disconnected.	Check for disconnection of the motor cable.	Correct the servomotor wiring.
A.b6A: MECHATROLINK Communications ASIC Error 1	DRIVER MECHATROLINK communication section fault.	–	Turn the power supply OFF and then ON again. If the alarm still occurs, the DRIVER may be faulty. Replace the DRIVER.

(cont'd)

Alarm Number: Alarm Name (Alarm Description)	Cause	Investigative Actions	Corrective Actions
A.b6b: MECHATROLINK Communications ASIC Error 2	MECHATROLINK data reception error occurred due to noise interference.	–	Take measures against noise. Check the MECHATROLINK communications cable and FG wiring and take measures such as adding ferrite core on the MECHATROLINK communications cable.
	DRIVER MECHATROLINK communication section fault.	–	Turn the power supply OFF and then ON again. If the alarm still occurs, the DRIVER may be faulty. Replace the DRIVER.
A.bF0: System Alarm 0	A DRIVER fault occurred.	–	Turn the power supply OFF and then ON again. If the alarm still occurs, the DRIVER may be faulty. Replace the DRIVER.
A.bF1: System Alarm 1	A DRIVER fault occurred.	–	Turn the power supply OFF and then ON again. If the alarm still occurs, the DRIVER may be faulty. Replace the DRIVER.
A.bF2: System Alarm 2	A DRIVER fault occurred.	–	Turn the power supply OFF and then ON again. If the alarm still occurs, the DRIVER may be faulty. Replace the DRIVER.
A.bF3: System Alarm 3	A DRIVER fault occurred.	–	Turn the power supply OFF and then ON again. If the alarm still occurs, the DRIVER may be faulty. Replace the DRIVER.
A.bF4: System Alarm 4	A DRIVER fault occurred.	–	Turn the power supply OFF and then ON again. If the alarm still occurs, the DRIVER may be faulty. Replace the DRIVER.
A.C10: Servo Overrun Detected (Detected when the servomotor power is ON.)	The order of phases U, V, and W in the servomotor wiring is incorrect.	Check the motor wiring.	Confirm that the servomotor is correctly wired.
	An encoder fault occurred.	–	If the alarm still occurs after turning the power OFF and then ON again, even though the servomotor is correctly wired, the servomotor may be faulty. Replace the servomotor.
	A DRIVER fault occurred.	–	Turn the power supply OFF and then ON again. If the alarm still occurs, the DRIVER may be faulty. Replace the DRIVER.
A.C80: Absolute Encoder Clear Error and Multi-turn Limit Setting Error	An encoder fault occurred.	–	Turn the power supply OFF and then ON again. If the alarm still occurs, the servomotor may be faulty. Replace the servomotor.
	A DRIVER fault occurred.	–	Turn the power supply OFF and then ON again. If the alarm still occurs, the DRIVER may be faulty. Replace the DRIVER.

(cont'd)

Alarm Number: Alarm Name (Alarm Description)	Cause	Investigative Actions	Corrective Actions
A.C90: Encoder Communications Error	Contact fault of connector or incorrect wiring for encoder cable.	Check the connector contact status for encoder cable.	Re-insert the connector and confirm that the encoder is correctly wired.
	Cable disconnection for encoder cable or short-circuit. Or, incorrect cable impedance.	Check the encoder cable.	Use the cable with the specified rating.
	Corrosion caused by improper temperature, humidity, or gas, short-circuit caused by intrusion of water drops or cutting oil, or connector contact fault caused by vibration.	Check the operating environment.	Improve the operating environmental conditions, and replace the cable. If the alarm still occurs, replace the DRIVER.
	Malfunction caused by noise interference.	–	Correct the wiring around the encoder by separating the encoder cable from the motor cable or by checking the grounding and other wiring.
	A DRIVER fault occurred.	–	Connect the servomotor to another DRIVER, and turn ON the control power. If no alarm occurs, the DRIVER may be faulty. Replace the DRIVER.
A.C91 : Encoder Communications Position Data Error	Noise interference occurred on the I/O signal line because the encoder cable is bent and the sheath is damaged.	Check the encoder cable and connector.	Confirm that there is no problem with the cable layout.
	The encoder cable is bundled with a high-current line or near a high-current line.	Check the cable layout for encoder cable.	Confirm that there is no surge voltage on the cable.
	The FG potential varies because of influence from machines on the servomotor side, such as the welder.	Check the cable layout for encoder cable.	Properly ground the machines to separate from the encoder FG.
A.C92: Encoder Communications Timer Error	Noise interference occurred on the I/O signal line from the encoder.	–	Take countermeasures against noise for the encoder wiring.
	Excessive vibration and shocks were applied to the encoder.	Check the operating environment.	Reduce the machine vibration or correctly install the servomotor.
	An encoder fault occurred.	–	Turn the power supply OFF and then ON again. If the alarm still occurs, the servomotor may be faulty. Replace the servomotor.
	A DRIVER fault occurred.	–	Turn the power supply OFF and then ON again. If the alarm still occurs, the DRIVER may be faulty. Replace the DRIVER.
A.CA0: Encoder Parameter Error	An encoder fault occurred.	–	Turn the power supply OFF and then ON again. If the alarm still occurs, the servomotor may be faulty. Replace the servomotor.
	A DRIVER fault occurred.	–	Turn the power supply OFF and then ON again. If the alarm still occurs, the DRIVER may be faulty. Replace the DRIVER.

(cont'd)

Alarm Number: Alarm Name (Alarm Description)	Cause	Investigative Actions	Corrective Actions
A.Cb0: Encoder Echoback Error	The wiring and contact for encoder cable are incorrect.	Check the wiring.	Correct the wiring.
	Noise interference occurred due to incorrect cable specifications of encoder cable.	–	Use tinned annealed copper shielded twisted-pair or screened unshielded twisted-pair cable with a core of at least 0.12 mm^2.
	Noise interference occurred because the wiring distance for the encoder cable is too long.	–	The wiring distance must be 50 m max.
	The FG potential varies because of influence from machines on the servomotor side, such as the welder.	Check the cable layout for encoder cable.	Properly ground the machines to separate from encoder FG.
	Excessive vibration and shocks were applied to the encoder.	Check the operating environment.	Reduce the machine vibration or correctly install the servomotor.
	An encoder fault occurred.	–	Turn the power supply OFF and then ON again. If the alarm still occurs, the servomotor may be faulty. Replace the servomotor.
	A DRIVER fault occurred.	–	Turn the power supply OFF and then ON again. If the alarm still occurs, the DRIVER may be faulty. Replace the DRIVER.
A.CC0: Multiturn Limit Disagreement	When using a direct drive (DD) servomotor, the multiturn limit value (Pn205) is different from that of the encoder.	Check the value of the Pn205.	Correct the setting of Pn205 (0 to 65535).
	The multiturn limit value of the encoder is different from that of the DRIVER. Or, the multi- turn limit value of the DRIVER has been changed.	Check the value of the Pn205 of the DRIVER.	Execute Fn013 at the occurrence of alarm.
	A DRIVER fault occurred.	–	Turn the power supply OFF and then ON again. If the alarm still occurs, the DRIVER may be faulty. Replace the DRIVER.
A.CF1: Feedback Option Module Communications Error (Reception error)	Wiring of cable between serial converter unit and DRIVER is incorrect or contact is faulty.	Check the external encoder wiring.	Correct the cable wiring.
	The specified cable is not used between serial converter unit and DRIVER.	Confirm the external encoder wiring specifications.	Use the specified cable.
	Cable between serial converter unit and DRIVER is too long.	Measure the length of this cable.	Use 20-m cable max.
	Sheath of cable between serial converter unit and DRIVER is broken.	Check the cable for damage.	Replace the cable.
A.CF2: Feedback Option Module Communications Error (Timer stop)	Noise interferes with the cable between serial converter unit and DRIVER.	–	Correct the wiring around serial converter unit, e.g., separating I/O signal line from main circuit cable or grounding.
	A serial converter unit fault occurred.	–	Replace the serial converter unit.
	A DRIVER fault occurred.	–	Replace the DRIVER.

(cont'd)

Alarm Number: Alarm Name (Alarm Description)	Cause	Investigative Actions	Corrective Actions
A.d00: Position Error Over-flow (Position error exceeded the value set in the excessive position error alarm level (Pn520).)	The servomotor U, V, and W wirings is faulty.	Check the motor cable connection.	Confirm that there is no contact fault in the motor wiring or encoder wiring.
	The position reference speed is too high.	Reduce the reference speed, and operate the DRIVER.	Reduce the position reference speed or acceleration of position reference. Or, reconsider the electronic gear ratio.
	The acceleration of the position reference is too high.	Reduce the reference acceleration, and operate the DRIVER.	Reduce the reference acceleration of the position reference using a MECHATROLINK command, or smooth the acceleration of the position reference by selecting the position reference filter (ACCFIL) using a MECHATROLINK command.
	Setting of the excessive position error alarm level (Pn520) is low against the operating condition.	Check the alarm level (Pn520) to see if it is set to an appropriate value.	Set the Pn520 to proper value.
	A DRIVER fault occurred.	–	Turn the power supply OFF and then ON again. If the alarm still occurs, the DRIVER may be faulty. Replace the DRIVER.
A.d01: Position Error Over-flow Alarm at Servo ON	This alarm occurs if the servomotor power is turned ON when the position error is greater than the set value of Pn526 while the servomotor power is OFF.	Check the position error amount (Un008) while the servomotor power is OFF.	Correct the excessive position error alarm level at servo ON (Pn526).
A.d02: Position Error Over-flow Alarm by Speed Limit at Servo ON	When the position errors remain in the error counter, Pn529 limits the speed if the servomotor power is ON. If Pn529 limits the speed in such a state, this alarm occurs when position references are input and the number of position errors exceeds the value set for the excessive position error alarm level (Pn520).	–	Correct the excessive position error alarm level (Pn520). Or, adjust the speed limit level at servo ON (Pn529).
A.d10: Motor-load Position Error Overflow	Motor rotation direction and external encoder installation direction are opposite.	Check the and the external encoder installation direction.	Install the external encoder in the opposite direction, or change the setting of the external encoder usage method (Pn002.3) to reverse the direction.
	Mounting of the load (e.g., stage) and external encoder joint installation are incorrect.	Check the external encoder mechanical connection.	Check the mechanical joints.
A.E02: MECHATROLINK Internal Synchronization Error 1	MECHATROLINK transmission cycle fluctuated.	–	Remove the cause of transmission cycle fluctuation at host PC or PLC...etc.
	A DRIVER fault occurred.	–	Turn the power supply OFF and then ON again. If the alarm still occurs, the DRIVER may be faulty. Replace the DRIVER.
A.E40: MECHATROLINK Transmission Cycle Setting Error	Setting of MECHATROLINK transmission cycle is out of specifications range.	Check the MECHATROLINK transmission cycle setting.	Set the transmission cycle to the proper value.

(cont'd)

Alarm Number: Alarm Name (Alarm Description)	Cause	Investigative Actions	Corrective Actions
A.E41: MECHATROLINK Communications Data Size Setting Error	The number of transmission bytes set by the DIP switch S3 is incorrect.	Check the MECHATROLINK communications data size of the host PC or PLC...etc.	Reset the setting of the DIP switch S3 to change the number of transmission bytes to the proper value.
A.E42: MECHATROLINK Station Address Setting Error	The station address is out of the allowable setting range.	Check the rotary switches, S1 and S2, to see if the station address is within the allowable range from 03 to EF.	Check the setting for the station address of the host PC or PLC...etc, and reset the setting of the rotary switches, S1 and S2 to change the address to the proper value between 03 and EF.
	Two or more stations on the communications network have the same address.	Check that two or more stations on the communications network have the same address.	Check the setting for the station address of the host PC or PLC...etc, and reset the setting of the rotary switches, S1 and S2 to change the address to the proper value between 03 and EF.
A.E50: MECHATROLINK Synchronization Error	WDT data of host PC or PLC...etc was not updated correctly.	Check the WDT data updating for the host PC or PLC...etc.	Update the WDT data at the host PC or PLC...etc correctly.
	A DRIVER fault occurred.	–	Turn the power supply OFF and then ON again. If the alarm still occurs, the DRIVER may be faulty. Replace the DRIVER.
A.E51: MECHATROLINK Synchronization Failed	WDT data of host PC or PLC...etc was not updated correctly at the synchronization communications start, and synchronization communications could not start.	Check the WDT data updating for the host PC or PLC...etc.	Update the WDT data at the host PC or PLC...etc correctly.
	A DRIVER fault occurred.	–	Turn the power supply OFF and then ON again. If the alarm still occurs, the DRIVER may be faulty. Replace the DRIVER.
A.E60: MECHATROLINK Communications error (Reception error)	MECHATROLINK wiring is incorrect.	Check the MECHATROLINK wirings.	Correct the MECHATROLINK wiring. Connect the terminator correctly.
	MECHATROLINK data reception error occurred due to noise interference.	–	Take measures against noise. Check the MECHATROLINK communications cable and FG wiring and take measures such as adding ferrite core on the MECHATROLINK communications cable.
	A DRIVER fault occurred.	–	Turn the power supply OFF and then ON again. If the alarm still occurs, the DRIVER may be faulty. Replace the DRIVER.
A.E61: MECHATROLINK Transmission Cycle Error (Synchronization interval error)	MECHATROLINK transmission cycle fluctuated.	Check the MECHATROLINK transmission cycle setting.	Remove the cause of transmission cycle fluctuation at host PC or PLC...etc.
	A DRIVER fault occurred.	–	Turn the power supply OFF and then ON again. If the alarm still occurs, the DRIVER may be faulty. Replace the DRIVER.

(cont'd)

Alarm Number: Alarm Name (Alarm Description)	Cause	Investigative Actions	Corrective Actions
A.E62: MECHATROLINK Communications error (FCS error)	MECHATROLINK wiring is incorrect.	Check the MECHATROLINK wirings.	Correct the MECHATROLINK wiring.
	MECHATROLINK data reception error occurred due to noise interference.	–	Take measures against noise. Check the MECHATROLINK communications cable and FG wiring and take measures such as adding ferrite core on the MECHATROLINK communications cable.
	A DRIVER fault occurred.	–	Turn the power supply OFF and then ON again. If the alarm still occurs, the DRIVER may be faulty. Replace the DRIVER.
A.E63: MECHATROLINK Synchronization Frame Not Received Alarm	MECHATROLINK wiring is incorrect.	Check the MECHATROLINK wirings.	Correct the MECHATROLINK wiring.
	MECHATROLINK data reception error occurred due to noise interference.	–	Take measures against noise. Check the MECHATROLINK communications cable and FG wiring and take measures such as adding ferrite core on the MECHATROLINK communications cable.
	A DRIVER fault occurred.	–	Turn the power supply OFF and then ON again. If the alarm still occurs, the DRIVER may be faulty. Replace the DRIVER.
A.E71: Safety Option Module Detection Failure	The connection between the DRIVER and the safety option module is faulty.	Check the connection between the DRIVER and the safety option module.	Correctly connect the safety option module.
	The safety option module was disconnected.	–	Execute Fn014 (Resetting configuration error of option module) with using the SigmaWin+ and turn the power supply OFF and then ON again.
	A safety option module fault occurred.	–	Replace the safety option module.
	A DRIVER fault occurred.	–	Replace the DRIVER.
A.E72: Feedback Option Module Detection Failure	The connection between the DRIVER and the Feedback Option Module is Faulty.	Check the connection between the DRIVER and the Feedback Option Module.	Correctly connect the Feedback Option Module.
	The Feedback Option Module was disconnected.	–	Execute resetting configuration error in option modules (Fn014) and turn the power supply OFF and then ON again.
	A Feedback Option Module fault occurred.	–	Replace the Feedback Option Module.
	A DRIVER fault occurred.	–	Replace the DRIVER.

(cont'd)

Alarm Number: Alarm Name (Alarm Description)	Cause	Investigative Actions	Corrective Actions
A.E74: Unsupported Safety Option Module	A safety option module fault occurred.	–	Replace the safety option module.
	A unsupported safety option module was connected.	Refer to the catalog of the connected safety option module.	Connect a compatible safety option module.
A.E75: Unsupported Feed-back Option Module	A feedback option module fault occurred.	–	Replace the feedback option module.
	A unsupported feedback option module was connected.	Refer to the catalog of the connected feedback option module or the manual of the DRIVER.	Connect a compatible feedback option module.
A.EA2: DRV Alarm 2 (DRIVER WDT error)	MECHATROLINK transmission cycle fluctuated.	Check the MECHATROLINK transmission cycle setting.	Remove the cause of transmission cycle fluctuation at host PC or
	A DRIVER fault occurred.	–	Turn the power supply OFF and then ON again. If the alarm still occurs, the DRIVER may be faulty. Replace the DRIVER.
A.Eb1	Please contact SMC.		
A.Ed1: Command Execution Timeout	A timeout error occurred when using an MECHATROLINK command.	Check the motor status when the command is executed.	Execute the SV_ON or SENS_ON command only when the motor is not running.
		For fully-closed loop control, check the status of the external encoder after an output is made to execute the command.	Execute the SENS_ON command only when an external encoder is connected.
A.F10: Main Circuit Cable Open Phase (With the main power supply ON, voltage was low for more than 1 second in an R, S, or T phase.) (Detected when the main power supply was turned ON.)	The three-phase power supply wiring is incorrect.	Check the power supply wiring.	Confirm that the power supply is correctly wired.
	The three-phase power supply is unbalanced.	Measure the voltage at each phase of the three-phase power supply.	Balance the power supply by changing phases.
	A single-phase power is input without setting Pn00B.2 (power supply method for three-phase DRIVER) to 1 (single-phase power supply).	Check the power supply and the parameter setting.	Match the parameter setting to the power supply.
	A DRIVER fault occurred.	–	Turn the power supply OFF and then ON again. If the alarm still occurs, the DRIVER may be faulty. Replace the DRIVER.

(cont'd)

Alarm Number: Alarm Name (Alarm Description)	Cause	Investigative Actions	Corrective Actions
FL-1*2: System Alarm	DRIVER failure	–	Turn the power supply OFF and then ON again. If the alarm still occurs, the DRIVER may be faulty. Replace the DRIVER.
FL-2*2: System Alarm		–	
CPF00*3: Digital Operator Transmission Error 1	The contact between the digital operator and the DRIVER is faulty.	Check the connector contact.	Insert securely the connector or replace the cable.
	Malfunction caused by noise interference.		Keep the digital operator or the cable away from noise sources.
CPF01*3: Digital Operator Transmission Error 2	A digital operator fault occurred.		Disconnect the digital operator and then re-connect it. If the alarm still occurs, the digital operator may be faulty. Replace the digital operator.
	A DRIVER fault occurred.		Turn the power supply OFF and then ON again. If the alarm still occurs, the DRIVER may be faulty. Replace the DRIVER.

∗2. These alarms are not stored in the alarm history and are displayed only in the panel display.
∗3. Digital operator is made of the YASUKAWA ELECTRIC Ltd.

9.2 Warning Displays

The following sections describe troubleshooting in response to warning displays.
The warning name and warning meaning output are listed in order of the warning numbers in *9.2.1 List of Warnings*.

The causes of warnings and troubleshooting methods are provided in *9.2.2 Troubleshooting of Warnings*.

9.2.1 List of Warnings

This section provides list of warnings.
After its cause has been removed, the warning can be deactivated in any of the methods marked ○ in the warning reset column.

(1) Commands for the MECHATROLINK-III standard servo profile

	Warning Number	Warning Name	Warning reset				
			Automatically *6	Power OFF ↓ ON	Alarm warning clear command [ALM-CLR]	SigmaWin+ [Alarm] | [Display Alarm] | Reset button	SigmaWin+ [Setup] | [Software Reset] | Execute button
Warning	A.900*3	Position Error Overflow	–	○	○	○	○
	A.901*3	Position Error Overflow Alarm at Servo ON	–	○	○	○	○
	A.910*3	Overload	–	○	○	○	○
	A.911*3	Vibration	–	○	○	○	○
	A.920*3	Regenerative Overload	–	○	○	○	○
	A.921*3	Dynamic Brake Overload	–	○	○	○	○
	A.930*3	Absolute Encoder Battery Error	–	○	○	○	○
	A.94A*4	Data Setting Warning 1 (Parameter Number Error)	○	○	○	○	○
	A.94B*4	Data Setting Warning 2 (Out of Range)	○	○	○	○	○
	A.94C*4	Data Setting Warning 3 (Calculation Error)	○	○	○	○	○
	A.94D*4	Data Setting Warning 4 (Parameter Size)	○	○	○	○	○
	A.94E*4	Data Setting Warning 5 (Latch Mode Error)	–	○	○	○	○
	A.95A*4	Command Warning 1 (Unsatisfying Command)	○	○	○	○	○
	A.95B*4	Command Warning 2 (Non-supported Command)	○	○	○	○	○
	A.95D*4	Command Warning 4 (Command Interference)	○	○	○	○	○
	A.95E*4	Command Warning 5 (Subcommand Disable)	○	○	○	○	○
	A.95F*4	Command Warning 6 (Undefined Command)	○	○	○	○	○
	A.960*4	MECHATROLINK Communications Warning	–	○	○	○	○
	A.962*4	MECHATROLINK Communications Warning (FCS Error)	–	○	○	○	○
	A.963*4	MECHATROLINK Communications Warning (Synchronization Frame Not Received)	–	○	○	○	○
	A.971*5	Undervoltage	–	○	○	○	○
	A.97A*4	Command Warning 7 (Phase Error)	○	○	○	○	○
	A.97B*4	Data Clamp (Out of Range)	○	○	○	○	○
	A.9A0*3	Overtravel	–	○	○	○	○

∗3. Use Pn008.2 to activate or not the warning detection.
∗4. Use Pn800.1 to activate or not the warning detection.
∗5. Use Pn008.1 to activate or not the warning detection.
∗6. If using the commands for the MECHATROLINK-III standard servo profile, the warning will automatically be cleared after the correct command is received.

(2) Commands for the MECHATROLINK-II-compatible profile

	Warning Number	Warning Name	Warning reset			
			Power OFF ↓ ON	Alarm warning clear command [ALM-CLR]	SigmaWin+ [Alarm] | [Display Alarm] | Reset button	SigmaWin+ [Setup] | [Software Reset] | Execute button
Warning	A.900*3	Position Error Overflow	○	○	○	○
	A.901*3	Position Error Overflow Alarm at Servo ON	○	○	○	○
	A.910*3	Overload	○	○	○	○
	A.911*3	Vibration	○	○	○	○
	A.920*3	Regenerative Overload	○	○	○	○
	A.921*3	Dynamic Brake Overload	○	○	○	○
	A.930*3	Absolute Encoder Battery Error	○	○	○	○
	A.94A*4	Data Setting Warning 1 (Parameter Number Error)	○	○	○	○
	A.94B*4	Data Setting Warning 2 (Out of Range)	○	○	○	○
	A.94C*4	Data Setting Warning 3 (Calculation Error)	○	○	○	○
	A.94D*4	Data Setting Warning 4 (Parameter Size)	○	○	○	○
	A.94E*4	Data Setting Warning 5 (Latch Mode Error)	○	○	○	○
	A.95A*4	Command Warning 1 (Unsatisfying Command)	○	○	○	○
	A.95B*4	Command Warning 2 (Non-supported Command)	○	○	○	○
	A.95D*4	Command Warning 4 (Command Interference)	○	○	○	○
	A.95E*4	Command Warning 5 (Subcommand Disable)	○	○	○	○
	A.95F*4	Command Warning 6 (Undefined Command)	○	○	○	○
	A.960*4	MECHATROLINK Communications Warning	○	○	○	○
	A.962*4	MECHATROLINK Communications Warning (FCS Error)	○	○	○	○
	A.963*4	MECHATROLINK Communications Warning (Synchronization Frame Not Received)	○	○	○	○
	A.971*5	Undervoltage	○	○	○	○
	A.97A*4	Command Warning 7 (Phase Error)	○	○	○	○
	A.97B*4	Data Clamp (Out of Range)	○	○	○	○
	A.9A0*3	Overtravel	○	○	○	○

*3. Use Pn008.2 to activate or not the warning detection.
*4. Use Pn800.1 to activate or not the warning detection.
*5. Use Pn008.1 to activate or not the warning detection.

9.2.2 Troubleshooting of Warnings

Refer to the following table to identity the cause of a warning and the action to be taken. Contact SMC if the problem cannot be solved by the described corrective action.

Warning Number: Warning Name (Warning Description)	Cause	Investigative Actions	Corrective Actions
A.900: Position Error Overflow	The servomotor U, V, and W wirings is faulty.	Check the motor cable connection.	Confirm that there is no contact fault in the motor wiring or encoder wiring.
	The DRIVER gain is too low.	Check the DRIVER gain.	Increase the servo gain by using the function such as advanced autotuning.
	The acceleration of the position reference is too high.	Reduce the reference acceleration, and operate the DRIVER.	Reduce the reference acceleration of the position reference using a MECHATROLINK command, or smooth the acceleration of the position reference by selecting the position reference filter (ACCFIL) using a MECHATROLINK command.
	Setting of the excessive position error alarm level (Pn520) is low against the operating condition.	Check the alarm level (Pn520) to see if it is set to an appropriate value.	Set the Pn520 to proper value.
	A DRIVER fault occurred.	–	Turn the power supply OFF and then ON again. If the alarm still occurs, the DRIVER may be faulty. Replace the DRIVER.
A.901: Position Error Overflow Alarm at Servo ON	When the servomotor power is ON, the position error exceeded the parameter setting (Pn526×Pn528/100).	–	Set an appropriate value for the excessive position error warning level at servo ON (Pn528).
A.910: Overload (Warning before alarm A.710 or A.720 occurs)	Incorrect wiring or contact fault of servomotor and encoder.	Check the wiring.	Confirm that the servomotor and encoder are correctly wired.
	Operation beyond the overload protection characteristics.	Check the motor overload characteristics and executed run command.	Reconsider the load conditions and operating conditions. Or, increase the motor capacity.
	Excessive load was applied during operation because the servomotor was not driven due to mechanical problems.	Check the executed operation reference and motor speed.	Remove the mechanical problems.
	A DRIVER fault occurred.	–	The DRIVER may be faulty. Replace the DRIVER.
	Abnormal vibration was detected at the motor speed.	Check for abnormal noise from the servomotor, and check the speed and torque waveforms during operation.	Reduce the motor speed or reduce the servo gain by using the function such as one-parameter tuning.

	The moment of inertia ratio (Pn103) value is greater than the actual value or is greatly changed.	Check the moment of inertia ratio.	Set the moment of inertia ratio (Pn103) to an appropriate value.

(cont'd)

Warning Number: Warning Name (Warning Description)	Cause	Investigative Actions	Corrective Actions
A.920: Regenerative Overload (Warning before the alarm A.320 occurs)	The power supply voltage exceeds the specified limit.	Measure the power supply voltage.	Set the power supply voltage within the specified range.
	Insufficient external regenerative resistance, regenerative resistor capacity, or DRIVER capacity. Or, regenerative power has been continuously flowing back.	Check the operating condition or the capacity.	Change the regenerative resistance, regenerative resistor capacity, or DRIVER capacity. Reconsider the operating conditions.
	Regenerative power continuously flowed back because negative load was continuously applied.	Check the load to the servomotor during operation.	Reconsider the system including servo drives, machine, and operating conditions.
A.921: Dynamic Brake Overload (Warning before the alarm A.731 occurs)	The servomotor rotates because of external force.	Check the operation status.	Take measures to ensure the servomotor will not rotate because of external force.
	The rotating energy at a DB stop exceeds the DB resistance capacity.	Check the power consumed by DB resistance (Un00B) to see how many times the DB has been used.	Reconsider the following: - Reduce the motor reference speed. - Reduce the moment of inertia ratio. - Reduce the number of times of the DB stop operation.
	A DRIVER fault occurred.	–	The DRIVER may be faulty. Replace the DRIVER.
A.930: Absolute Encoder Battery Error (The absolute encoder battery voltage is lower than the specified value.) ∗ Only when an absolute encoder is connected.	The battery connection is incorrect.	Check the battery connection.	Reconnect the battery.
	The battery voltage is lower than the specified value 2.7 V.	Measure the battery voltage.	Replace the battery.
	A DRIVER fault occurred.	–	The DRIVER may be faulty. Replace the DRIVER.
A.94A: Data Setting Warning 1 (Parameter Number Error)	Disabled parameter number was used.	Refer to *9.3 Monitoring Communication Data on Occurrence of an Alarm or Warning* to determine which command was the cause of the warning.	Use the correct parameter number.
A.94B: Data Setting Warning 2 (Out of Range)	Attempted to send values outside the range to the command data.	Refer to *9.3 Monitoring Communication Data on Occurrence of an Alarm or Warning* to determine which command was the cause of the warning.	Set the value of the parameter within the allowable range.
A.94C: Data Setting Warning 3 (Calculation Error)	Calculation result of set value is incorrect.	Refer to *9.3 Monitoring Communication Data on Occurrence of an Alarm or Warning* to determine which command was the cause of the warning.	Set the value of the parameter within the allowable range.
A.94D: Data Setting Warning 4 (Parameter Size)	Parameter size set in command is incorrect.	Refer to *9.3 Monitoring Communication Data on Occurrence of an Alarm or Warning* to determine which command was the cause of the warning.	Use the correct parameter size.

(cont'd)

Warning Number: Warning Name (Warning Description)	Cause	Investigative Actions	Corrective Actions
A.94E Data Setting Warning 5 (Latch mode error)	Latch mode error is detected.	Refer to *9.3 Monitoring Communication Data on Occurrence of an Alarm or Warning* to determine which command was the cause of the warning.	Change the setting value of Pn850 or the LT_MOD data for the LTMOD_ON command sent by the host PC or PLC...etc to the proper value.
A.95A Command Warning 1 (Unsatisfying Command)	Command sending condition is not satisfied.	Refer to *9.3 Monitoring Communication Data on Occurrence of an Alarm or Warning* to determine which command was the cause of the warning.	Send a command after command sending condition is satisfied.
A.95B Command Warning 2 (Non-supported Command)	DRIVER received unsupported command.	Refer to *9.3 Monitoring Communication Data on Occurrence of an Alarm or Warning* to determine which command was the cause of the warning.	Do not sent an unsupported command.
A.95D Command Warning 4 (Command Interference)	Command sending condition for latch-related commands is not satisfied.	Refer to *9.3 Monitoring Communication Data on Occurrence of an Alarm or Warning* to determine which command was the cause of the warning.	Send a command after command sending condition is satisfied.
A.95E Command Warning 5 (Subcommand Disable)	Subcommand sending condition is not satisfied.	Refer to *9.3 Monitoring Communication Data on Occurrence of an Alarm or Warning* to determine which command was the cause of the warning.	Send a command after command sending condition is satisfied.
A.95F Command Warning 6 (Undefined Command)	Undefined command was sent.	Refer to *9.3 Monitoring Communication Data on Occurrence of an Alarm or Warning* to determine which command was the cause of the warning.	Do not use an undefined command.
A.960 MECHATROLINK Communications Warning	MECHATROLINK wiring is incorrect.	Confirm the wiring.	Correct the MECHATROLINK wiring. Or, connect a terminal connector to the terminal station.
	MECHATROLINK data reception error occurred due to noise interference.	Confirm the installation conditions.	Take measures against noise. Check the MECHATROLINK communications cable and FG wiring and take measures such as adding ferrite core on the MECHATROLINK communications cable.
	A DRIVER fault occurred.	–	A fault occurred in the DRIVER. Replace the DRIVER.

(cont'd)

Warning Number: Warning Name (Warning Description)	Cause	Investigative Actions	Corrective Actions
A.962 MECHATROLINK Communications Warning (FCS Error)	MECHATROLINK wiring is incorrect.	Confirm the wiring.	Correct the MECHATROLINK wiring. Or, connect a terminal to the terminal station.
	MECHATROLINK data reception error occurred due to noise interference.	Confirm the installation conditions.	Take measures against noise. Check the MECHATROLINK communications cable and FG wiring and take measures such as adding ferrite core on the MECHATROLINK communications cable.
	A DRIVER fault occurred.	–	A fault occurred in the DRIVER. Replace the DRIVER.
A.963 MECHATROLINK Communications Warning (Synchronization Frame Not Received)	MECHATROLINK wiring is incorrect.	Confirm the wiring.	Correct the MECHATROLINK wiring. Or, connect a terminal to the terminal station.
	MECHATROLINK data reception error occurred due to noise interference.	Confirm the installation conditions.	Take measures against noise. Check the MECHATROLINK communications cable and FG wiring and take measures such as adding ferrite core on the MECHATROLINK communications cable.
	A DRIVER fault occurred.	–	A fault occurred in the DRIVER. Replace the DRIVER.
A.971: Undervoltage	a) For 100 VAC DRIVERs: The AC power supply voltage is 60 V or less. b) For 200-VAC DRIVERs: The AC power supply voltage is 140 V or less. c) For 400-VAC DRIVERs: The AC power supply voltage is 280 V or less.	Measure the power supply voltage.	Set the power supply voltage within the specified range.
	The power supply voltage dropped during operation.	Measure the power supply voltage.	Increase the power supply capacity.
	Occurrence of instantaneous power interruption.	Measure the power supply voltage.	When the instantaneous power cut hold time (Pn509) is set, decrease the setting.
	The DRIVER fuse is blown out.	–	Replace the DRIVER and con- nect a reactor to the DRIVER.
	A DRIVER fault occurred.	–	The DRIVER may be faulty. Replace the DRIVER.

(cont'd)

Warning Number: Warning Name (Warning Description)	Cause	Investigative Actions	Corrective Actions
A.97A Command Warning 7 (Phase Error)	A command that cannot be executed in the current phase was sent.	–	Send a command after command sending condition is satisfied.
A.97B Data Clamp (Out Of Range)	The set command data was clamped to a minimum or maximum value out of the allowable setting range.	–	Set the value of the command data within the allowable range.
A.9A0: Overtravel (Overtravel status is detected.)	When the servomotor power is ON, overtravel status is detected.	Check the input signal monitor (Un005) to check the status of the overtravel signals.	Refer to *9.4 Troubleshooting Malfunction Based on Operation and Conditions of the Servomotor*. Even if overtravel signals were not shown by the input signal monitor (Un005), momentary overtravel may have been detected. Take the following precautions. a) Do not specify movements that would cause overtravel from the host PC or PLC...etc. b) Check the wiring of the overtravel signals. c) Take countermeasures for noise.

9.3 Monitoring Communication Data on Occurrence of an Alarm or Warning

The command data received on occurrence of an alarm or warning, such as a data setting warning (A.94□) or a command warning (A.95□) can be monitored using the following parameters. The following is an example of the data when an alarm/warning has occurred in the normal state.

Command Data Monitor at Alarm/Warning Occurrence: Pn890 to Pn8A6
Response Data Monitor at Alarm/Warning Occurrence: Pn8A8 to Pn8BE

Command Byte Order	Command Data Storage at Alarm/Warning Occurrence	
	CMD	RSP
0	Pn890.1 to 0	Pn8A8.1 to 0
1	Pn890.3 to 2	Pn8A8.3 to 2
2	Pn890.5 to 4	Pn8A8.5 to 4
3	Pn890.7 to 6	Pn8A8.7 to 6
4 to 7	Pn892	Pn8AA
8 to 11	Pn894	Pn8AC
12 to 15	Pn896	Pn8AE
16 to 19	Pn898	Pn8B0
20 to 23	Pn89A	Pn8B2
24 to 27	Pn89C	Pn8B4
28 to 31	Pn89E	Pn8B6
32 to 35	Pn8A0	Pn8B8
36 to 39	Pn8A2	Pn8BA
40 to 43	Pn8A4	Pn8BC
44 to 47	Pn8A6	Pn8BE

Example: Pn8A8 = 87 65 43 21

Note 1. Data is stored in little endian byte order and displayed in the hexadecimal format.
2. For details on commands, refer to *8 MECHATROLINK-III Commands.*

9.4 Troubleshooting Malfunction Based on Operation and Conditions of the Servomotor

Troubleshooting for the malfunctions based on the operation and conditions of the servomotor is provided in this section.
Be sure to turn OFF the servo system before troubleshooting items shown in bold lines in the table.

Problem	Probable Cause	Investigative Actions	Corrective Actions
Servomotor Does Not Start	The control power supply is not ON.	Check voltage between control power terminals.	Correct the wiring.
	The main circuit power supply is not ON.	Check the voltage between main circuit power terminals.	Correct the wiring.
	Wiring of I/O signal connector CN1 is faulty or disconnected.	Check if the connector CN1 is properly inserted and connected.	Correct the connector CN1 connection.
	Wiring for motor cable or encoder cable is disconnected.	Check the wiring.	Correct the wiring.
	Overloaded	Run under no load and check the load status.	Reduce load or replace with larger capacity servomotor.
	Encoder type differs from parameter setting (Pn002.2).	Check the settings for parameter Pn002.2.	Set parameter Pn002.2 to the encoder type being used.
	Settings for the input signal selections (Pn50A, Pn50B and Pn511) is incorrect.	Check the settings for parameters Pn50A, Pn50B and Pn511.	Correct the settings for parameter Pn50A, Pn50B and Pn511.
	SV_ON command is not sent.	Check the command sent from the host PC or PLC...etc.	Send the SV_ON command.
	SENS_ON command is not sent.	Check the command sent from the host PC or PLC...etc.	Send the command in the correct DRIVER sequence.
	The forward run prohibited (P-OT) and reverse run prohibited (N-OT) input signals are turned OFF.	Check P-OT or N-OT input signal.	Turn P-OT or N-OT input signal ON.
	The safety input signal (/HWBB1 or /HWBB2) remains OFF.	Check the /HWBB1 and /HWBB2 input signal.	Set the /HWBB1 and /HWBB2 input signal to ON. When not using the safety function, mount the safety function jumper connector (provided as an accessory) on the CN8.
	A DRIVER fault occurred.	_	Replace the DRIVER.
Servomotor Moves Instantaneously, and then Stops	Servomotor wiring is incorrect.	Check the wiring.	Correct the wiring.
	Encoder wiring is incorrect.	Check the wiring.	Correct the wiring.
Servomotor Speed Unstable	Wiring connection to servomotor is defective.	Check connections of power line (phases U, V, and W) and encoder connectors.	Tighten any loose terminals or connectors and correct the wiring.
Servomotor Rotates Without Reference Input	A DRIVER fault occurred.	_	Replace the DRIVER.
Dynamic Brake Does Not Operate	Improper Pn001.0 setting	Check the setting for parameter Pn001.0.	Correct the setting for parameter Pn001.0.
	DB resistor disconnected	Check if excessive moment of inertia, motor overspeed, or DB frequently activated occurred.	Replace the DRIVER, and reduce the load.
	DB drive circuit fault	_	There is a defective component in the DB circuit. Replace the DRIVER.

(cont'd)

Problem	Probable Cause	Investigative Actions	Corrective Actions
Abnormal Noise from Servomotor	The servomotor largely vibrated during execution of tuning-less function.	Check the motor speed waveform.	Reduce the load so that the moment of inertia ratio becomes within the allowable value, or increase the load level or lower the tuning level for the tuning-less levels setting (Fn200).
	Mounting is not secured.	Check if there are any loose mounting screws.	Tighten the mounting screws.
		Check if there is misalignment of couplings.	Align the couplings.
		Check if there are unbalanced couplings.	Balance the couplings.
	Bearings are defective.	Check for noise and vibration around the bearings.	Replace the servomotor.
	Vibration source at the driven machine.	Check for any foreign matter, damage, or deformations on the machinery's movable parts.	Contact the machine manufacturer.
	Noise interference due to incorrect I/O signal cable specifications.	The I/O signal cable must be tinned annealed copper shielded twistedpair or screened unshielded twistedpair cable with a core of 0.12 mm^2 min.	Use the specified I/O signal cable.
	Noise interference due to length of I/O signal cable.	Check the length of the I/O signal cable.	The I/O signal cable length must be no more than 3 m.
	Noise interference due to incorrect cable specifications of encoder cable.	The encoder cable must be tinned annealed copper shielded twisted-pair or screened unshielded twistedpair cable with a core of 0.12 mm^2 min.	Use the specified encoder cable.
	Noise interference due to length of encoder cable.	Check the length of the encoder cable.	The encoder cable must be no more than 50 m.
	Noise interference due to damaged encoder cable.	Check if the encoder cable is bent and the sheath is damaged.	Replace the encoder cable and correct the cable layout.
	Excessive noise to the encoder cable.	Check if the encoder cable is bundled with a high-current line or near a high-current line.	Correct the cable layout so that no surge is applied.
	The FG potential varies because of influence from machines on the servomotor side, such as the welder.	Check if the machines are correctly grounded.	Properly ground the machines to separate from the encoder FG.
	DRIVER pulse counting error due to noise interference	Check if there is noise interference on the I/O signal line from the encoder.	Take measures against noise in the encoder wiring.
	Excessive vibration and shock to the encoder	Check if vibration from the machine occurred or servomotor installation is incorrect (mounting surface accuracy, fixing, alignment, etc.).	Reduce vibration from the machine, or secure the servomotor installation.
	An encoder fault occurred.	–	Replace the servomotor.

(cont'd)

Problem	Probable Cause	Investigative Actions	Corrective Actions
Servomotor Vibrates at Frequency of Approx. 200 to 400 Hz.	Unbalanced servo gains	Check to see if the servo gains have been correctly adjusted.	Execute the advanced autotuning.
	Speed loop gain value (Pn100) too high.	Check the speed loop gain (Pn100). Factory setting: Kv = 40.0 Hz	Reduce the speed loop gain (Pn100).
	Position loop gain value (Pn102) too high.	Check the position loop gain (Pn102). Factory setting: Kp = 40.0/s	Reduce the position loop gain (Pn102).
	Incorrect speed loop integral time constant (Pn101)	Check the speed loop integral time constant (Pn101). Factory setting: Ti = 20.0 ms	Correct the speed loop integral time constant (Pn101).
	Incorrect moment of inertia ratio (Pn103)	Check the moment of inertia ratio (Pn103).	Correct the moment of inertia ratio (Pn103).
High Motor Speed Overshoot on Starting and Stop-ping	Unbalanced servo gains	Check to see if the servo gains have been correctly adjusted.	Execute the advanced autotuning.
	Speed loop gain value (Pn100) too high	Check the speed loop gain (Pn100). Factory setting: Kv = 40.0 Hz	Reduce the speed loop gain (Pn100).
	Position loop gain value (Pn102) too high	Check the position loop gain (Pn102). Factory setting: Kp = 40.0/s	Reduce the position loop gain (Pn102).
	Incorrect speed loop integral time constant (Pn101)	Check the speed loop integral time constant (Pn101). Factory setting: Ti = 20.0 ms	Correct the speed loop integral time constant (Pn101).
	Incorrect moment of inertia ratio data (Pn103)	Check the moment of inertia ratio (Pn103).	Correct the moment of inertia ratio (Pn103).
Absolute Encoder Position Difference Error (The position saved in the host PC or PLC...etc when the power was turned OFF is different from the position when the power was next turned ON.)	Noise interference due to incorrect cable specifications of encoder cable.	The encoder cable must be tinned annealed copper shielded twistedpair or screened unshielded twistedpair cable with a core of 0.12 mm^2 min.	Use the specified encoder cable.
	Noise interference due to length of encoder cable.	Check the length of the encoder cable.	The encoder cable must be no more than 50 m.
	Noise interference due to damaged encoder cable.	Check if the encoder cable is bent and the sheath is damaged.	Replace the encoder cable and correct the cable layout.
	Excessive noise to the encoder cable.	Check if the encoder cable is bundled with a high-current line or near a high-current line.	Correct the cable layout so that no surge is applied.
	FG potential varies because of influence of machines such as weld-ers at the servomotor.	Check if the machines are correctly grounded.	Ground machines correctly, and prevent diversion to the FG on the encoder side.
	DRIVER pulse counting error due to noise interference	Check if there is noise interference on the I/O signal line from the encoder.	Take measures against noise in the encoder wiring.
	Excessive vibration and shock to the encoder	Check if vibration from the machine occurred or servomotor installation is incorrect (mounting surface accuracy, fixing, alignment, etc.).	Reduce vibration from the machine, or secure the servomotor installation.
	An encoder fault occurred.	–	Replace the servomotor.
	A DRIVER fault occurred. (The pulse count does not change.)	–	Replace the DRIVER.
	Host PC or PLC...etc multiturn data reading error	Check the error detection section of the host PC or PLC...etc.	Correct the error detection section of the host PC or PLC...etc.
		Check if the host PC or PLC...etc is executing data parity checks.	Execute a multiturn data parity check.
		Check noise in the cable between the DRIVER and the host PC or PLC...etc.	Take measures against noise, and again execute a multiturn data par-ity check.

(cont'd)

Problem	Probable Cause	Investigative Actions	Corrective Actions
Overtravel (OT)	Forward or reverse run prohibited signal is input.	Check the external power supply (+24 V) voltage for the input signal.	Correct the external power supply (+24 V) voltage.
		Check if the overtravel limit switch operates properly.	Correct the overtravel limit switch.
		Check if the overtravel limit switch is wired correctly.	Correct the overtravel limit switch wiring.
		Check the settings for parameters Pn50A and Pn50B.	Correct the settings for parameters Pn50A and Pn50B.
	Forward or reverse run prohibited signal malfunctioning.	Check the fluctuation of the external power supply (+24 V) voltage for the input signal.	Stabilize the external power supply (+24 V) voltage.
		Check if the overtravel limit switch operates correctly.	Correct the overtravel limit switch.
		Check if the overtravel limit switch wiring is correct. (check for damaged cables or loose screws.)	Correct the overtravel limit switch wiring.
	Incorrect forward or reverse run prohibited signal (P-OT/N-OT) allocation (parameters Pn50A.3, Pn50B.0)	Check if the P-OT signal is allocated in Pn50A.3.	If another signal is allocated in Pn50A.3, allocate P-OT.
		Check if the N-OT signal is allocated in Pn50B.0.	If another signal is allocated in Pn50B.0, allocate N-OT.
	Incorrect servomotor stop method selection	Check the settings for parameters Pn001.0 and Pn001.1 when the servomotor power is OFF.	Select a servomotor stop method other than "coast to stop."
		Check the settings for parameters Pn001.0 and Pn001.1 when in torque control.	Select a servomotor stop method other than "coast to stop."
Improper Stop Position by Overtravel (OT) Signal	Improper limit switch position and dog length	–	Install the limit switch at the appropriate position.
	The overtravel limit switch position is too short for the coasting distance.	–	Install the overtravel limit switch at the appropriate position.

(cont'd)

Problem	Probable Cause	Investigative Actions	Corrective Actions
Position Error (Without Alarm)	Noise interference due to incorrect encoder cable specifications	The encoder cable must be tinned annealed copper shielded twistedpair or screened unshielded twistedpair cable with a core of 0.12 mm^2 min.	Use the specified encoder cable.
	Noise interference due to length of encoder cable.	Check the length of the encoder cable.	The encoder cable must be no more than 50 m.
	Noise influence due to damaged encoder cable.	Check if the encoder cable is bent and the sheath is damaged.	Replace the encoder cable and modify the cable layout.
	Excessive noise to encoder cable.	Check if the encoder cable is bundled with a high-current line or near a high-current line.	Change the cable layout so that no surge is applied.
	The FG potential varies because of influence from machines on the servomotor side such as the welder.	Check if the machines are correctly grounded.	Properly ground the machines encoder FG.
	DRIVER pulse count error due to noise	Check if the I/O signal line from the encoder is influenced by noise.	Take measures against noise in the encoder wiring.
	Excessive vibration and shock to the encoder	Check if vibration from the machine occurred or servomotor installation is incorrect (mounting surface accuracy, fixing, alignment, etc.).	Reduce the machine vibration or mount the servomotor securely.
	Unsecured coupling between machine and servomotor	Check if a position error occurs at the coupling between machine and servomotor.	Secure the coupling between the machine and servomotor.
	Noise interference due to improper I/O signal cable specifications	The I/O signal cable must be tinned annealed copper shielded twistedpair or screened unshielded twistedpair cable with a core of 0.12 mm^2 min.	Use input signal cable with the specified specifications.
	Noise interference due to length of I/O signal cable	Check the I/O signal cable length.	The I/O signal cable length must be no more than 3 m.
	An encoder fault occurred. (The pulse count does not change.)	–	Replace the servomotor.
	A DRIVER fault occurred.	–	Replace the DRIVER.
Servomotor Overheated	Ambient operating temperature too high	Measure the servomotor ambient operating temperature.	Reduce the ambient operating temperature to 40°C or less.
	Servomotor surface dirty	Visually check the surface.	Clean dust and oil from the surface.
	Servomotor overloaded	Check the load status with monitor.	If overloaded, reduce load or replace with larger capacity DRIVER and servomotor.

10. List of Parameters

10.1 List of Parameters

10.1.1 Utility Functions

The following list shows the available utility functions.

Parameter No.	Function	Reference Section
Fn000	Alarm history display	6.2
Fn002	JOG operation	6.3
Fn003	Origin search	6.4
Fn004	Program JOG operation	6.5
Fn005	Initializing parameter settings	6.6
Fn006	Clearing alarm history	6.7
Fn008	Absolute encoder multiturn reset and encoder alarm reset	4.7.4
Fn00C	Offset adjustment of analog monitor output	6.8
Fn00D	Gain adjustment of analog monitor output	6.9
Fn00E	Automatic offset-signal adjustment of the motor current detection signal	6.10
Fn00F	Manual offset-signal adjustment of the motor current detection signal	6.11
Fn010	Write prohibited setting	6.12
Fn011	Production information display	6.13
Fn013	Multiturn limit value setting change when a multiturn limit disagreement alarm occurs	4.7.6
Fn014	Resetting configuration error in option modules	6.14
Fn01B	Vibration detection level initialization	6.15
Fn020	Origin setting	6.16
Fn030	Software reset	6.17
Fn200	Tuning-less levels setting	5.2.2
Fn201	Advanced autotuning	5.3.2
Fn202	Advanced autotuning by reference	5.4.2
Fn203	One-parameter tuning	5.5.2
Fn204	Anti-resonance control adjustment function	5.6.2
Fn205	Vibration suppression function	5.7.2
Fn206	EasyFFT	6.18
Fn207	Online vibration monitor	6.19

Note: Execute the utility function with SigmaWin+.

10.1.2 Parameters

Parameter No.	Size	Name	Setting Range	Units	Factory Setting	When Enabled	Classi-fication	Profile	Reference Section
Pn000	2	Basic Function Select Switch 0	0000 to 00B3	—	0000	After restart	Setup	—	—

n. □ □ □ □ (4th digit, 3rd digit, 2nd digit, 1st digit)

Direction Selection		Reference Section
0	Sets CCW as forward direction.	4.3.1
1	Sets CW as forward direction. (Reverse Rotation Mode)	
2 to 3	Reserved (Do not change.)	

Reserved (Do not change.)

Reserved (Do not change.)

Reserved (Do not change.)

Parameter No.	Size	Name	Setting Range	Units	Factory Setting	When Enabled	Classi-fication	Profile	Reference Section
Pn001	2	Application Function Select Switch 1	0000 to 1122	—	0000	After restart	Setup	—	—

n. □ □ □ □ (4th digit, 3rd digit, 2nd digit, 1st digit)

Servomotor power OFF or Alarm Gr.1 Stop Mode		Reference Section
0	Stops the servomotor by applying DB (dynamic brake).	4.3.5
1	Stops the servomotor by applying DB and then releases DB.	
2	Makes the servomotor coast to a stop state without using the DB.	

Overtravel (OT) Stop Mode		Reference Section
0	Stops in accordance with the setting of Pn001.0.	4.3.2
1	Sets the torque of Pn406 to the maximum value, decelerates the servomotor to a stop, and then sets it to servolock state.	
2	Sets the torque of Pn406 to the maximum value, decelerates the servomotor to a stop, and then sets it to coasting state.	

AC/DC Power Input Selection		Reference Section
0	Applicable to AC power input: Input AC power supply through L1, L2, and L3 terminals.	3.1.4
1	Applicable to DC power input: Input DC power supply between B1/ + and –2, or input DC power supply between B1/ + and –.	

Reserved (Do not change.)

(cont'd)

Parameter No.	Size	Name	Setting Range	Units	Factory Setting	When Enabled	Classi-fication	Profile	Reference Section
Pn002	2	Application Function Select Switch 2	0000 to 4113	–	0011	After restart	Setup	–	–

n. □ □ □ □ (4th digit, 3rd digit, 2nd digit, 1st digit)

MECHATROLINK Command Position and Speed Control Option		Reference Section
0	Reserved (Do not set.)	*1
1	TLIM operates as the torque limit values.	
2	Reserved (Do not set.)	
3	Reserved (Do not set.)	

Torque Control Option		Reference Section
0	Reserved (Do not set.)	*1
1	VLIM operates as the speed limit value.	

Absolute Encoder Usage		Reference Section
0	Uses absolute encoder as an absolute encoder.	4.7
1	Uses absolute encoder as an incremental encoder.	

Maker setting : Do not change.

*1. For details, refer to *8 MECHATROLINK-III Commands*.

(cont'd)

Parameter No.	Size	Name	Setting Range	Units	Factory Setting	When Enabled	Classi-fication	Profile	Reference Section
Pn006	2	Application Function Select Switch 6	0000 to 005F	—	0002	Immediately	Setup	—	5.1.3

n. □ □ □ □ (4th digit, 3rd digit, 2nd digit, 1st digit)

Analog Monitor 1 Signal Selection

00	Motor rotating speed (1 V / 1000 min^{-1})
01	Speed reference (1 V / 1000 min^{-1})
02	Torque reference (1 V/100% rated torque)
03	Position error (0.05 V/1 reference unit)
04	Position amplifier error (after electronic gears) (0.05 V/ 1 encoder pulse unit)
05	Position reference speed (1 V / 1000 min^{-1})
06	Reserved (Do not use.)
07	Motor-load position error (0.01 V/1 reference unit)
08	Positioning completion (positioning completed: 5 V, positioning not completed: 0 V)
09	Speed feedforward (1 V / 1000 min^{-1})
0A	Torque feedforward (1 V/100% rated torque)
0B	Active gain (1st gain: 1 V, 2nd gain: 2 V)
0C	Completion of position reference (completed: 5 V, not completed: 0 V)
0D	External encoder speed (1 V / 1000 min^{-1}: Values at motor shaft)

Reserved (Do not change.)

Reserved (Do not change.)

Pn007	2	Application Function Select Switch 7	0000 to 005F	—	0000	Immediately	Setup	—	5.1.3

n. □ □ □ □ (4th digit, 3rd digit, 2nd digit, 1st digit)

Analog Monitor 2 Signal Selection

00	Motor rotating speed (1 V / 1000 min^{-1})
01	Speed reference (1 V / 1000 min^{-1})
02	Torque reference (1 V/100% rated torque)
03	Position error (0.05 V/1 reference unit)
04	Position amplifier error (after electronic gears) (0.05 V/ 1 encoder pulse unit)
05	Position reference speed (1 V / 1000 min^{-1})
06	Reserved (Do not use.)
07	Motor-load position error (0.01 V/1 reference unit)
08	Positioning completion (positioning completed: 5 V, positioning not completed: 0 V)
09	Speed feedforward (1 V / 1000 min^{-1})
0A	Torque feedforward (1 V/100% rated torque)
0B	Active gain (1st gain: 1 V, 2nd gain: 2 V)
0C	Completion of position reference (completed: 5 V not completed: 0 V)
0D	External encoder speed (1 V / 1000 min^{-1}: Values at motor shaft)

Reserved (Do not change.)

Reserved (Do not change.)

(cont'd)

Parameter No.	Size	Name	Setting Range	Units	Factory Setting	When Enabled	Classi-fication	Profile	Reference Section
Pn008	2	Application Function Select Switch 8	0000 to 7121	–	4000	After restart	Setup	–	–

n. □ □ □ □ (4th digit, 3rd digit, 2nd digit, 1st digit)

Lowered Battery Voltage Alarm/Warning Selection		Reference Section
0	Outputs alarm (A.830) for lowered battery voltage.	4.7.3
1	Outputs warning (A.930) for lowered battery voltage.	

Function Selection for Undervoltage		Reference Section
0	Does not detect undervoltage.	4.3.7
1	Detects warning and limits torque by host controller.	
2	Detects warning and limits torque by Pn424 and Pn425. (Only in the DRIVER)	

Warning Detection Selection		Reference Section
0	Detects warning.	9.2.1
1	Does not detect warning (except for A.971).	

Reserved (Do not change.)

Parameter No.	Size	Name	Setting Range	Units	Factory Setting	When Enabled	Classi-fication	Profile	Reference Section
Pn009	2	Application Function Select Switch 9	0000 to 0111	–	0010	After restart	Tuning	–	–

n. □ □ □ □ (4th digit, 3rd digit, 2nd digit, 1st digit)

Reserved (Do not change.)

Current Control Method Selection		Reference Section
0	Current control method 1	5.8.3
1	Current control method 2	

Speed Detection Method Selection		Reference Section
0	Speed detection 1	5.8.5
1	Speed detection 2	

Reserved (Do not change.)

(cont'd)

Parameter No.	Size	Name	Setting Range	Units	Factory Setting	When Enabled	Classi-fication	Profile	Reference Section
Pn00B	2	Application Function Select Switch B	0000 to 1111	—	0000	After restart	Setup	—	—

n. □ □ □ □ (4th digit, 3rd digit, 2nd digit, 1st digit)

Parameter Display Selection		Reference Section
0	Setup parameters	2.4.1
1	All parameters	

Alarm Gr.2 Stop Method Selection		Reference Section
0	Stops the motor by setting the speed reference to "0".	4.3.5
1	Same setting as Pn001.0 (Stops the motor by applying DB or by coasting).	

Power Supply Method for Three-phase SERVOPACK		Reference Section
0	Three-phase power supply	3.1.3
1	Single-phase power supply	

Reserved (Do not change.)

Pn00C	2	Application Function Select Switch C	0000 to 0111	—	0000	After restart	Setup	—	4.5, 4.5.1

n. □ □ □ □ (4th digit, 3rd digit, 2nd digit, 1st digit)

Selection of Test without a Motor	
0	Disables test without a motor.
1	Enables test without a motor.

Encoder Resolution for Test without a Motor	
0	13 bits
1	20 bits

Encoder Type for Test without a Motor	
0	Incremental encoder
1	Absolute encoder

Reserved (Do not change.)

(cont'd)

Parameter No.	Size	Name	Setting Range	Units	Factory Setting	When Enabled	Classi-fication	Profile	Reference Section
Pn00D	2	Application Function Select Switch D	0000 to 1001	–	0000	Immediately	Setup	–	–

n. □ □ □ □ (4th digit, 3rd digit, 2nd digit, 1st digit)

- 1st digit: Reserved (Do not change.)
- 2nd digit: Reserved (Do not change.)
- 3rd digit: Reserved (Do not change.)
- 4th digit: Overtravel Warning Detection Selection (Reference Section: 4.3.2)
  - 0: Does not detect overtravel warning.
  - 1: Detects overtravel warning.

Pn081	2	Maker setting	Do not change.						
Pn100	2	Speed Loop Gain	10 to 20000	0.1 Hz	400	Immediately	Tuning	–	5.8.1
Pn101	2	Speed Loop Integral Time Constant	15 to 51200	0.01 ms	2000	Immediately	Tuning	–	
Pn102	2	Position Loop Gain	10 to 20000	0.1/s	400	Immediately	Tuning	–	
Pn103	2	Moment of Inertia Ratio	0 to 20000	1%	100	Immediately	Tuning	–	
Pn104	2	2nd Speed Loop Gain	10 to 20000	0.1 Hz	400	Immediately	Tuning	–	
Pn105	2	2nd Speed Loop Integral Time Constant	15 to 51200	0.01 ms	2000	Immediately	Tuning	–	
Pn106	2	2nd Position Loop Gain	10 to 20000	0.1/s	400	Immediately	Tuning	–	
Pn109	2	Feedforward Gain	0 to 100	1%	0	Immediately	Tuning	–	5.9.1
Pn10A	2	Feedforward Filter Time Constant	0 to 6400	0.01 ms	0	Immediately	Tuning	–	

(cont'd)

Parameter No.	Size	Name	Setting Range	Units	Factory Setting	When Enabled	Classi-fication	Profile	Reference Section
Pn10B	2	Application Function for Gain Select Switch	0000 to 5334	–	0000	–	–	–	–

n. □ □ □ □ (4th digit, 3rd digit, 2nd digit, 1st digit)

Mode Switch Selection		When Enabled	Classification	Reference Section
0	Uses internal torque reference as the condition (Level setting: Pn10C).	Immediately	Setup	5.9.2
1	Uses speed reference as the condition (Level setting: Pn10D).			
2	Uses acceleration as the condition (Level setting: Pn10E).			
3	Uses position error as the condition (Level setting: Pn10F).			
4	No mode switch function available.			

Speed Loop Control Method		When Enabled	Classification	Reference Section
0	PI control	After restart	Setup	–
1	I-P control			
2 to 3	Reserved (Do not change.)			

Reserved (Do not change.)

Reserved (Do not change.)

Parameter No.	Size	Name	Setting Range	Units	Factory Setting	When Enabled	Classi-fication	Profile	Reference Section
Pn10C	2	Mode Switch (torque reference)	0 to 800	1%	200	Immediately	Tuning	–	5.9.2
Pn10D	2	Mode Switch (speed reference)	0 to 10000	1 min^{-1}	0	Immediately	Tuning	–	
Pn10E	2	Mode Switch (acceleration)	0 to 30000	1 min^{-1}/ s	0	Immediately	Tuning	–	
Pn10F	2	Mode Switch (position error)	0 to 10000	1 reference unit	0	Immediately	Tuning	–	
Pn11F	2	Position Integral Time Constant	0 to 50000	0.1 ms	0	Immediately	Tuning	–	5.9.4
Pn121	2	Friction Compensation Gain	10 to 1000	1%	100	Immediately	Tuning	–	5.8.2
Pn122	2	2nd Gain for Friction Compensation	10 to 1000	1%	100	Immediately	Tuning	–	
Pn123	2	Friction Compensation Coefficient	0 to 100	1%	0	Immediately	Tuning	–	
Pn124	2	Friction Compensation Frequency Correction	-10000 to 10000	0.1 Hz	0	Immediately	Tuning	–	
Pn125	2	Friction Compensation Gain Correction	1 to 1000	1%	100	Immediately	Tuning	–	
Pn131	2	Gain Switching Time 1	0 to 65535	1 ms	0	Immediately	Tuning	–	5.8.1
Pn132	2	Gain Switching Time 2	0 to 65535	1 ms	0	Immediately	Tuning	–	
Pn135	2	Gain Switching Waiting Time 1	0 to 65535	1 ms	0	Immediately	Tuning	–	
Pn136	2	Gain Switching Waiting Time 2	0 to 65535	1 ms	0	Immediately	Tuning	–	

(cont'd)

Parameter No.	Size	Name	Setting Range	Units	Factory Setting	When Enabled	Classi-fication	Profile	Reference Section
Pn139	2	Automatic Gain Changeover Related Switch 1	0000 to 0052	–	0000	Immediately	Tuning	–	5.8.1
Pn13D	2	Current Gain Level	100 to 2000	1%	2000	Immediately	Tuning	–	5.8.4
Pn140	2	Model Following Control Related Switch	0000 to 1121	–	0100	Immediately	Tuning	–	–
Pn141	2	Model Following Control Gain	10 to 20000	0.1/s	500	Immediately	Tuning	–	–
Pn142	2	Model Following Control Gain Compensation	500 to 2000	0.1%	1000	Immediately	Tuning	–	–

Pn139

n. □ □ □ □ (4th digit, 3rd digit, 2nd digit, 1st digit)

Gain Switching Selection Switch

0	Manual gain switching Changes gain manually using G-SEL of the servo command output signals (SVCMD_IO).
1	Reserved (Do not change.)
2	Automatic gain switching pattern 1 Changes automatically 1st gain to 2nd gain when the switching condition A is satisfied. Changes automatically 2nd gain to 1st gain when the switching condition A is not satisfied.

Gain Switching Condition A

0	Positioning completion signal (/COIN) ON
1	Positioning completion signal (/COIN) OFF
2	Positioning near signal (/NEAR) ON
3	Positioning near signal (/NEAR) OFF
4	Position reference filter output = 0 and position reference input OFF
5	Position reference input ON

Reserved (Do not change.)

Reserved (Do not change.)

Pn140

n. □ □ □ □ (4th digit, 3rd digit, 2nd digit, 1st digit)

Model Following Control Selection

0	Does not use model following control.
1	Uses model following control.

Vibration Suppression Selection

0	Does not perform vibration suppression.
1	Performs vibration suppression over the specified frequency.
2	Performs vibration suppression over two different kinds of frequencies.

Vibration Suppression Adjustment Selection		Reference Section
0	Does not adjust vibration suppression automatically using utility function.	5.3.1, 5.4.1, 5.5.1, 5.7.1
1	Adjusts vibration suppression automatically using utility function.	

Selection of Speed Feedforward (VFF) / Torque Feedforward (TFF)		Reference Section
0	Does not use model following control and speed/torque feedforward together.	5.3.1, 5.4.1
1	Uses model following control and speed/torque feedforward together.	

(cont'd)

Parameter No.	Size	Name	Setting Range	Units	Factory Setting	When Enabled	Classi-fication	Profile	Reference Section
Pn143	2	Model Following Control Bias (Forward Direction)	0 to 10000	0.1%	1000	Immediately	Tuning	–	–
Pn144	2	Model Following Control Bias (Reverse Direction)	0 to 10000	0.1%	1000	Immediately	Tuning	–	–
Pn145	2	Vibration Suppression 1 Frequency A	10 to 2500	0.1 Hz	500	Immediately	Tuning	–	–
Pn146	2	Vibration Suppression 1 Frequency B	10 to 2500	0.1 Hz	700	Immediately	Tuning	–	–
Pn147	2	Model Following Control Speed Feedforward Compensation	0 to 10000	0.1%	1000	Immediately	Tuning	–	–
Pn148	2	2nd Model Following Control Gain	10 to 20000	0.1/s	500	Immediately	Tuning	–	–
Pn149	2	2nd Model Following Control Gain Compensation	500 to 2000	0.1%	1000	Immediately	Tuning	–	–
Pn14A	2	Vibration Suppression 2 Frequency	10 to 2000	0.1 Hz	800	Immediately	Tuning	–	–
Pn14B	2	Vibration Suppression 2 Compensation	10 to 1000	1%	100	Immediately	Tuning	–	–
Pn14F	2	Control Related Switch	0000 to 0011	–	0011	After restart	Tuning	–	–

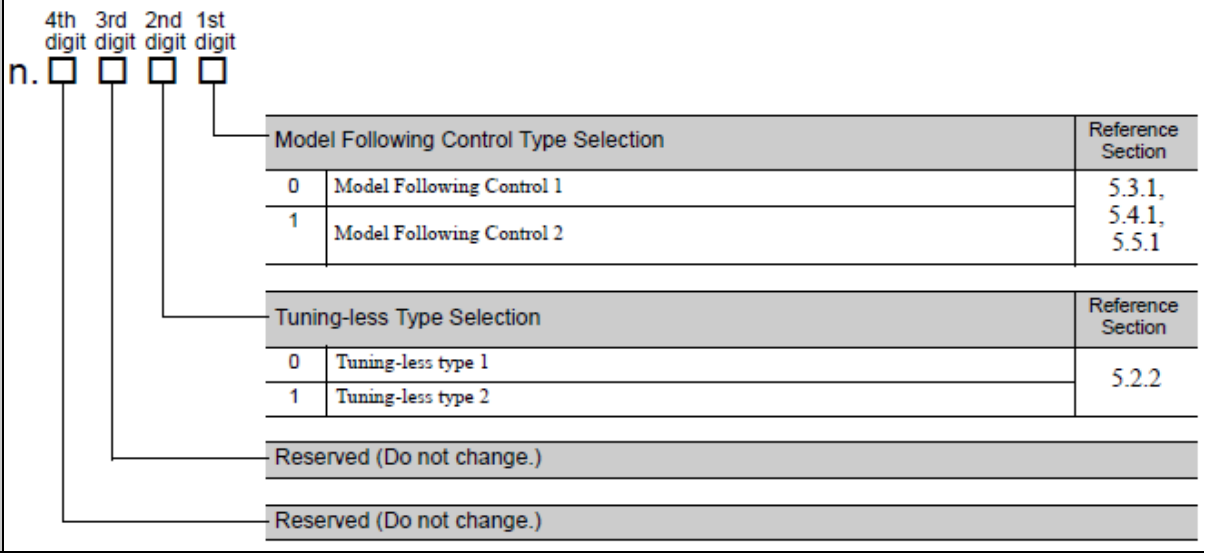

Model Following Control Type Selection		Reference Section
0	Model Following Control 1	5.3.1, 5.4.1, 5.5.1
1	Model Following Control 2	

Tuning-less Type Selection		Reference Section
0	Tuning-less type 1	5.2.2
1	Tuning-less type 2	

Reserved (Do not change.)

Reserved (Do not change.)

(cont'd)

Parameter No.	Size	Name	Setting Range	Units	Factory Setting	When Enabled	Classi-fication	Profile	Reference Section
Pn160	2	Anti-Resonance Control Related Switch	0000 to 0011	–	0010	Immediately	Tuning	–	5.3.1, 5.4.1, 5.5.1, 5.7.1
Pn161	2	Anti-Resonance Frequency	10 to 20000	0.1 Hz	1000	Immediately	Tuning	–	–
Pn162	2	Anti-Resonance Gain Compensation	1 to 1000	1%	100	Immediately	Tuning	–	–
Pn163	2	Anti-Resonance Damping Gain	0 to 300	1%	0	Immediately	Tuning	–	–
Pn164	2	Anti-Resonance Filter Time Constant 1 Compensation	-1000 to 1000	0.01 ms	0	Immediately	Tuning	–	–
Pn165	2	Anti-Resonance Filter Time Constant 2 Compensation	-1000 to 1000	0.01 ms	0	Immediately	Tuning	–	–
Pn170	2	Tuning-less Function Related Switch	0000 to 2411	–	1401	–	–	–	–
Pn205	2	Multiturn Limit Setting	0 to 65535	1 rev	65535	After restart	Setup	–	4.7.5

Pn160

n. □ □ □ □ (4th digit, 3rd digit, 2nd digit, 1st digit)

Anti-Resonance Control Selection	
0	Does not use anti-resonance control.
1	Uses anti-resonance control.

Anti-Resonance Control Adjustment Selection	
0	Does not adjust anti-resonance control automatically using utility function.
1	Adjusts anti-resonance control automatically using utility function.

Reserved (Do not change.)

Reserved (Do not change.)

Pn170

n. □ □ □ □ (4th digit, 3rd digit, 2nd digit, 1st digit)

Tuning-less Function Selection		When Enabled	Classification	Reference Section
0	Disables tuning-less function.	After restart	Setup	5.2
1	Enables tuning-less function.			

Control Method during Speed Control		When Enabled	Classification	Reference Section
0	Uses as speed control.	After restart	Setup	5.2
1	Uses as speed control and uses the host controller for position control.			

Rigidity Level		When Enabled	Classification	Reference Section
0 to 4	Sets rigidity level.	Immediately	Setup	5.2

Load Level		When Enabled	Classification	Reference Section
0 to 2	Sets load level.	Immediately	Setup	5.2

(cont'd)

Parameter No.	Size	Name	Setting Range	Units	Factory Setting	When Enabled	Classi-fication	Profile	Reference Section
Pn207	2	Position Control Function Switch	0000 to 2210	—	0010	After restart	Setup	—	—
Pn20A	4	Maker setting	Do not change.						
Pn20E	4	Electronic Gear Ratio (Numerator)	1 to 1073741824	1	1	After restart	Setup	—	4.4.3
Pn210	4	Electronic Gear Ratio (Denominator)	1 to 1073741824	1	1	After restart	Setup	—	
Pn212	4	Encoder Output Pulses	16 to 1073741824	1 P/rev	2048	After restart	Setup	—	4.4.5
Pn22A	2	Maker setting	Do not change.						

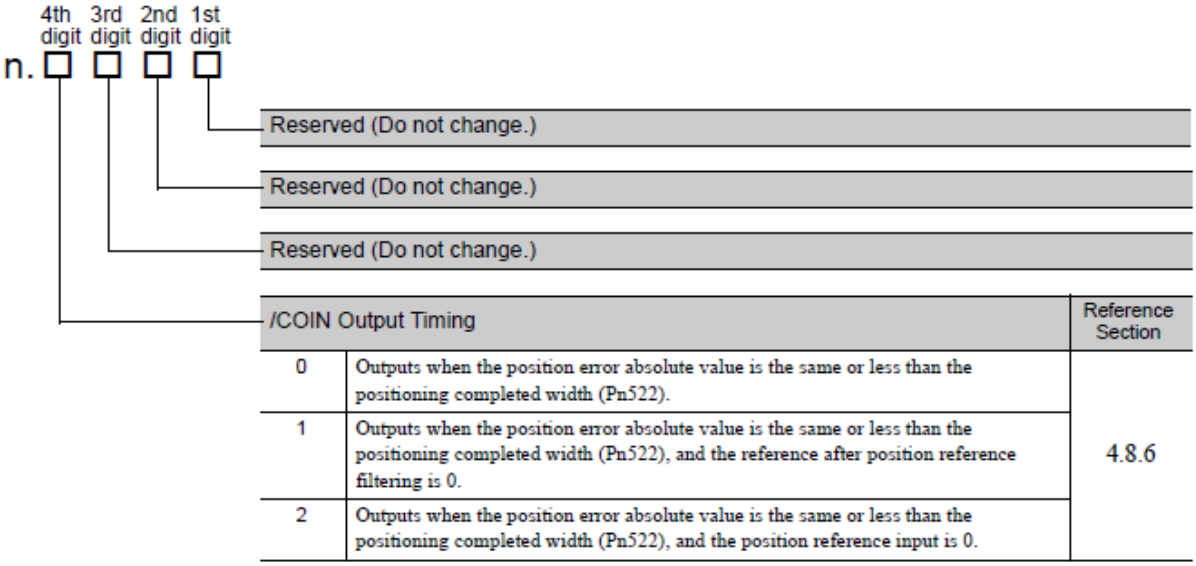

(cont'd)

Parameter No.	Size	Name	Setting Range	Units	Factory Setting	When Enabled	Classi-fication	Profile	Reference Section
Pn230	2	Position Control Expanded Function Switch	0000 to 0001	–	0000	After reset	Setup	–	5.8.6

n. □ □ □ □ (4th digit, 3rd digit, 2nd digit, 1st digit)

Backlash Compensation Direction	
0	Compensates with a reference in the forward direction.
1	Compensates with a reference in the reverse direction.

Reserved (Do not change.)

Reserved (Do not change.)

Reserved (Do not change.)

Pn231	4	Backlash Compensation Value	-500000 to 500000	0.1 reference unit	0	Immediately	Setup	–	5.8.6
Pn233	2	Backlash Compensation Time Constant	0 to 65536	0.01 ms	0	Immediately	Setup	–	5.8.6
Pn281	2	Maker setting	Do not change.						
Pn304	2	JOG Speed	0 to 10000	1 min^{-1}	500	Immediately	Setup	–	6.3
Pn305	2	Soft Start Acceleration Time	0 to 10000	1 ms	0	Immediately	Setup	–	–
Pn306	2	Soft Start Deceleration Time	0 to 10000	1 ms	0	Immediately	Setup	–	
Pn310	2	Vibration Detection Switch	0000 to 0002	–	0000	Immediately	Setup	–	–

n. □ □ □ □ (4th digit, 3rd digit, 2nd digit, 1st digit)

Vibration Detection Selection		Reference Section
0	Does not detect vibration.	6.15
1	Outputs warning (A.911) when vibration is detected.	
2	Outputs alarm (A.520) when vibration is detected.	

Reserved (Do not change.)

Reserved (Do not change.)

Reserved (Do not change.)

Pn311	2	Vibration Detection Sensibility	50 to 500	1%	100	Immediately	Tuning	–	6.15
Pn312	2	Vibration Detection Level	0 to 5000	1 min^{-1}	50	Immediately	Tuning	–	
Pn324	2	Moment of Inertia Calculating Start Level	0 to 20000	1%	300	Immediately	Setup	–	5.3.2
Pn401	2	Torque Reference Filter Time Constant	0 to 65535	0.01 ms	100	Immediately	Tun-ing	–	5.9.3

(cont'd)

Parameter No.	Size	Name	Setting Range	Units	Factory Setting	When Enabled	Classi-fication	Profile	Reference Section
Pn402	2	Forward Torque Limit	0 to 800	1%	800	Immediately	Setup	–	4.6.1
Pn403	2	Reverse Torque Limit	0 to 800	1%	800	Immediately	Setup	–	
Pn404	2	Forward External Torque Limit	0 to 800	1%	100	Immediately	Setup	–	4.6.2
Pn405	2	Reverse External Torque Limit	0 to 800	1%	100	Immediately	Setup	–	
Pn406	2	Emergency Stop Torque	0 to 800	1%	800	Immediately	Setup	–	4.3.2
Pn407	2	Speed Limit during Torque Control	0 to 10000	1 min^{-1}	10000	Immediately	Setup	–	4.8.8
Pn408	2	Torque Related Function Switch	0000 to 1111	–	0000	–	–	–	–

4th digit 3rd digit 2nd digit 1st digit

n. □ □ □ □

1st Step Notch Filter Selection		When Enabled	Classification	Reference Section
0	N/A	Immediately	Setup	5.9.3
1	Uses 1st step notch filter for torque reference.			

Speed Limit Selection		When Enabled	Classification	Reference Section
0	Uses the smaller of the maximum motor speed and the value of Pn407 as the speed limit value.	After restart	Setup	4.8.8
1	Uses the smaller of the overspeed detection speed and the value of Pn407 as the speed limit value.			

2nd Step Notch Filter Selection		When Enabled	Classification	Reference Section
0	N/A	Immediately	Setup	5.9.3
1	Uses 2nd step notch filter for torque reference.			

Friction Compensation Function Selection		When Enabled	Classification	Reference Section
0	Disables friction compensation function.	Immediately	Setup	5.8.2
1	Enables friction compensation function.			

Pn409	2	1st Notch Filter Frequency	50 to 5000	1 Hz	5000	Immediately	Tuning	–	5.9.3
Pn40A	2	1st Notch Filter Q Value	50 to 1000	0.01	70	Immediately	Tuning	–	
Pn40B	2	1st Notch Filter Depth	0 to 1000	0.001	0	Immediately	Tuning	–	
Pn40C	2	2nd Notch Filter Frequency	50 to 5000	1 Hz	5000	Immediately	Tuning	–	
Pn40D	2	2nd Notch Filter Q Value	50 to 1000	0.01	70	Immediately	Tuning	–	
Pn40E	2	2nd Notch Filter Depth	0 to 1000	0.001	0	Immediately	Tuning	–	
Pn40F	2	2nd Step 2nd Torque Reference Filter Frequency	100 to 5000	1 Hz	5000	Immediately	Tuning	–	
Pn410	2	2nd Step 2nd Torque Reference Filter Q Value	50 to 100	0.01	50	Immediately	Tuning	–	
Pn412	2	1st Step 2nd Torque Reference Filter Time Constant	0 to 65535	0.01 ms	100	Immediately	Tuning	–	5.8.1

(cont'd)

Parameter No.	Size	Name	Setting Range	Units	Factory Setting	When Enabled	Classi-fication	Profile	Reference Section
Pn424	2	Torque Limit at Main Circuit Voltage Drop	0 to 100	1%	50	Immediately	Setup	–	4.3.7
Pn425	2	Release Time for Torque Limit at Main Circuit Voltage Drop	0 to 1000	1 ms	100	Immediately	Setup	–	
Pn456	2	Sweep Torque Reference Amplitude	1 to 800	1%	15	Immediately	Tuning	–	6.18
Pn460	2	Notch Filter Adjustment Switch	0000 to 0101	–	0101	Immediately	Tuning	–	5.2.1 5.3.1 5.5.1

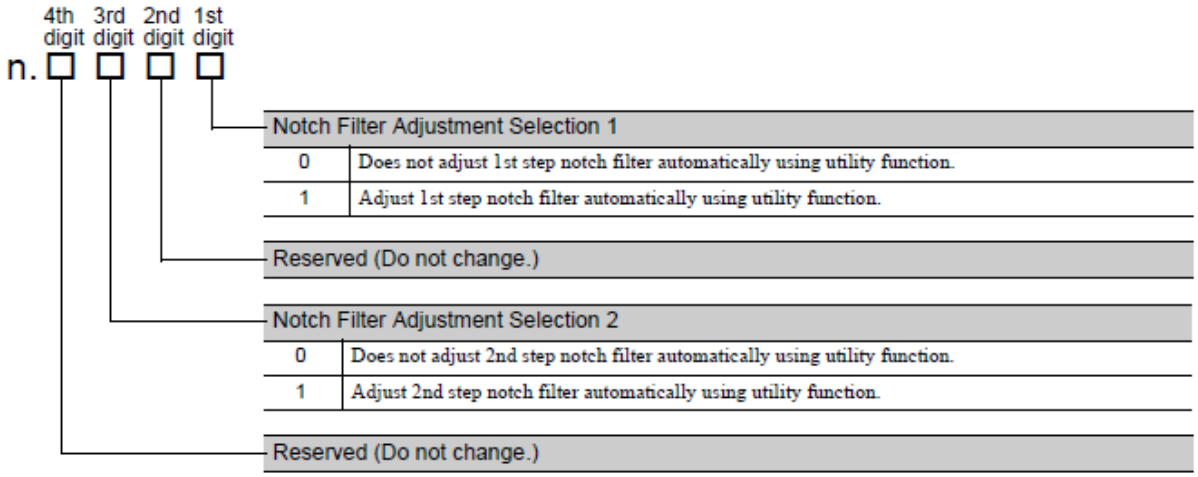

Pn501	2	Zero Clamp Level	0 to 10000	1 min^{-1}	10	Immediately	Setup	–	–
Pn502	2	Rotation Detection Level	1 to 10000	1 min^{-1}	20	Immediately	Setup	–	4.8.3
Pn503	2	Speed Coincidence Signal Output Width	0 to 100	1 min^{-1}	10	Immediately	Setup	–	4.8.5
Pn506	2	Lock Reference - Servo OFF Delay Time	0 to 50	10 ms	0	Immediately	Setup	–	4.3.4
Pn507	2	Lock Reference Output Speed Level	0 to 10000	1 min^{-1}	100	Immediately	Setup	–	
Pn508	2	Waiting Time for Lock Signal When Motor Running	10 to 100	10 ms	50	Immediately	Setup	–	
Pn509	2	Instantaneous Power Cut Hold time	20 to 1000	1 ms	20	Immediately	Setup	–	4.3.6

(cont'd)

Parameter No.	Size	Name	Setting Range	Units	Factory Setting	When Enabled	Classi-fication	Profile	Reference Section
Pn50A	2	Input Signal Selection 1	0000 to FFF1	—	1881	After restart	Setup	—	—

n. □ □ □ □ (4th digit, 3rd digit, 2nd digit, 1st digit)

- 1st digit: Reserved (Do not change.)
- 2nd digit: Reserved (Do not change.)
- 3rd digit: Reserved (Do not change.)
- 4th digit: P-OT Signal Mapping (Forward run prohibited when OFF (open)) — Reference Section: 4.3.2

0	Forward run allowed when CN1-13 input signal is ON (closed).
1	Forward run allowed when CN1-7 input signal is ON (closed).
2	Forward run allowed when CN1-8 input signal is ON (closed).
3	Forward run allowed when CN1-9 input signal is ON (closed).
4	Forward run allowed when CN1-10 input signal is ON (closed).
5	Forward run allowed when CN1-11 input signal is ON (closed).
6	Forward run allowed when CN1-12 input signal is ON (closed).
7	Forward run prohibited.
8	Forward run allowed.
9	Forward run allowed when CN1-13 input signal is OFF (open).
A	Forward run allowed when CN1-7 input signal is OFF (open).
B	Forward run allowed when CN1-8 input signal is OFF (open).
C	Forward run allowed when CN1-9 input signal is OFF (open).
D	Forward run allowed when CN1-10 input signal is OFF (open).
E	Forward run allowed when CN1-11 input signal is OFF (open).
F	Forward run allowed when CN1-12 input signal is OFF (open).

(cont'd)

Parameter No.	Size	Name	Setting Range	Units	Factory Setting	When Enabled	Classi-fication	Profile	Reference Section
	2	Input Signal Selection 2	0000 to FFFF	–	8882	After restart	Setup	–	–

4th digit 3rd digit 2nd digit 1st digit

n. □ □ □ □

N-OT Signal Mapping (Reverse run prohibited when OFF (open))		Reference Section
0	Reverse run allowed when CN1-13 input signal is ON (closed).	4.3.2
1	Reverse run allowed when CN1-7 input signal is ON (closed).	
2	Reverse run allowed when CN1-8 input signal is ON (closed).	
3	Reverse run allowed when CN1-9 input signal is ON (closed) .	
4	Reverse run allowed when CN1-10 input signal is ON (closed).	
5	Reverse run allowed when CN1-11 input signal is ON (closed).	
6	Reverse run allowed when CN1-12 input signal is ON (closed).	
7	Reverse run prohibited.	
8	Reverse run allowed.	
9	Reverse run allowed when CN1-13 input signal is OFF (open).	
A	Reverse run allowed when CN1-7 input signal is OFF (open).	
B	Reverse run allowed when CN1-8 input signal is OFF (open).	
C	Reverse run allowed when CN1-9 input signal is OFF (open).	
D	Reverse run allowed when CN1-10 input signal is OFF (open).	
E	Reverse run allowed when CN1-11 input signal is OFF (open).	
F	Reverse run allowed when CN1-12 input signal is OFF (open).	

Reserved (Do not change.)

/P-CL Signal Mapping (Torque Limit when ON (closed))		Reference Section
0	Active when CN1-13 input signal is ON (closed).	4.6.2
1	Active when CN1-7 input signal is ON (closed).	
2	Active when CN1-8 input signal is ON (closed).	
3	Active when CN1-9 input signal is ON (closed).	
4	Active when CN1-10 input signal is ON (closed).	
5	Active when CN1-11 input signal is ON (closed).	
6	Active when CN1-12 input signal is ON (closed).	
7	Always active (fixed).	
8	Not active (fixed).	
9	Active when CN1-13 input signal is OFF (open).	
A	Active when CN1-7 input signal is OFF (open).	
B	Active when CN1-8 input signal is OFF (open).	
C	Active when CN1-9 input signal is OFF (open).	
D	Active when CN1-10 input signal is OFF (open).	
E	Active when CN1-11 input signal is OFF (open).	
F	Active when CN1-12 input signal is OFF (open).	

/N-CL Signal Mapping (Torque Limit when ON (closed))		Reference Section
0 to F	Same as /P-CL signal mapping	4.6.2

(cont'd)

Parameter No.	Size	Name	Setting Range	Units	Factory Setting	When Enabled	Classi-fication	Profile	Reference Section
Pn50E	2	Output Signal Selection 1	0000 to 3333	—	0000	After restart	Setup	—	—

n. □ □ □ □ (4th digit, 3rd digit, 2nd digit, 1st digit)

Positioning Completion Signal Mapping (/COIN)		Reference Section
0	Disabled (the above signal is not used.)	4.8.6
1	Outputs the signal from CN1-1, 2 output terminal.	
2	Outputs the signal from CN1-23, 24 output terminal.	
3	Outputs the signal from CN1-25, 26 output terminal.	

Speed Coincidence Detection Signal Mapping (/V-CMP)		Reference Section
0 to 3	Same as /COIN Signal Mapping.	4.8.5

Servomotor Rotation Detection Signal Mapping (/TGON)		Reference Section
0 to 3	Same as /COIN Signal Mapping.	4.8.3

Servo Ready Signal Mapping (/S-RDY)		Reference Section
0 to 3	Same as /COIN Signal Mapping.	4.8.4

Parameter No.	Size	Name	Setting Range	Units	Factory Setting	When Enabled	Classi-fication	Profile	Reference Section
Pn50F	2	Output Signal Selection 2	0000 to 3333	—	0100	After restart	Setup	—	—

n. □ □ □ □ (4th digit, 3rd digit, 2nd digit, 1st digit)

Torque Limit Detection Signal Mapping (/CLT)		Reference Section
0	Disabled (the above signal is not used.)	4.6.3
1	Outputs the signal from CN1-1, 2 output terminal.	
2	Outputs the signal from CN1-23, 24 output terminal.	
3	Outputs the signal from CN1-25, 26 output terminal.	

Speed Limit Detection Signal Mapping (/VLT)		Reference Section
0 to 3	Same as /CLT Signal Mapping.	4.8.8

Brake Signal Mapping (/BK)		Reference Section
0 to 3	Same as /CLT Signal Mapping.	4.3.4

Warning Signal Mapping (/WARN)		Reference Section
0 to 3	Same as /CLT Signal Mapping.	4.8.2

(cont'd)

Parameter No.	Size	Name	Setting Range	Units	Factory Setting	When Enabled	Classi-fication	Profile	Reference Section
Pn510	2	Output Signal Selection 3	0000 to 0333	–	0000	After restart	Setup	–	–

n. □ □ □ □ (4th digit, 3rd digit, 2nd digit, 1st digit)

Near Signal Mapping (/NEAR)		Reference Section
0	Disabled (the above signal is not used.)	4.8.7
1	Outputs the signal from CN1-1, 2 terminal.	
2	Outputs the signal from CN1-23, 24 terminal.	
3	Outputs the signal from CN1-25, 26 terminal.	

Reserved (Do not change.)

Reserved (Do not change.)

Reserved (Do not change.)

(cont'd)

Parameter No.	Size	Name	Setting Range	Units	Factory Setting	When Enabled	Classi-fication	Profile	Reference Section
Pn511	2	Input Signal Selection 5	0000 to FFFF	—	6543	After restart	Setup	—	3.3.1

n. □ □ □ □ (4th digit, 3rd digit, 2nd digit, 1st digit)

Homing Deceleration Switch Signal Mapping (/DEC)

0	Active when CN1-13 input signal is ON (closed).
1	Active when CN1-7 input signal is ON (closed).
2	Active when CN1-8 input signal is ON (closed).
3	Active when CN1-9 input signal is ON (closed).
4	Active when CN1-10 input signal is ON (closed).
5	Active when CN1-11 input signal is ON (closed).
6	Active when CN1-12 input signal is ON (closed).
7	Not active (fixed).
9	Active when CN1-13 input signal is OFF (open).
A	Active when CN1-7 input signal is OFF (open).
B	Active when CN1-8 input signal is OFF (open).
C	Active when CN1-9 input signal is OFF (open).
D	Active when CN1-10 input signal is OFF (open).
E	Active when CN1-11 input signal is OFF (open).
F	Active when CN1-12 input signal is OFF (open).

External Latch Signal Mapping (/EXT1)

4	Active when CN1-10 input signal is ON (closed).
5	Active when CN1-11 input signal is ON (closed).
6	Active when CN1-12 input signal is ON (closed).
7	Not active (fixed).
D	Active when CN1-10 signal is OFF (open).
E	Active when CN1-11 signal is OFF (open).
F	Active when CN1-12 signal is OFF (open).
0 to 3 9 to C	Not active (fixed).

External Latch 2 Signal Mapping (/EXT2)

0 to C	Same as /EXT1 signal mapping.

External Latch 3 Signal Mapping (/EXT3)

0 to C	Same as /EXT1 signal mapping.

(cont'd)

Parameter No.	Size	Name	Setting Range	Units	Factory Setting	When Enabled	Classi-fication	Profile	Reference Section
Pn512	2	Output Signal Inverse Setting	0000 to 0111	–	0000	After restart	Setup	–	3.3.2
Pn517	2	Reserved (Do not change.)	–	–	0000	–	–	–	–
Pn51B	4	Maker setting	Do not change.						
Pn51E	2	Excessive Position Error Warning Level	10 to 100	1%	100	Immediately	Setup	–	9.2.1
Pn520	4	Excessive Position Error Alarm Level	1 to 1073741823	1 reference unit	5242880	Immediately	Setup	–	5.1.4 9.1.1
Pn522	4	Positioning Completed Width	0 to 1073741824	1 reference unit	7	Immediately	Setup	–	4.8.6
Pn524	4	NEAR Signal Width	1 to 1073741824	1 reference unit	1073741824	Immediately	Setup	–	4.8.7
Pn526	4	Excessive Position Error Alarm Level at Servo ON	1 to 1073741823	1 reference unit	5242880	Immediately	Setup	–	5.1.4
Pn528	2	Excessive Position Error Warning Level at Servo ON	10 to 100	1%	100	Immediately	Setup	–	
Pn529	2	Speed Limit Level at Servo ON	0 to 10000	1 min^{-1}	10000	Immediately	Setup	–	
Pn52A	2	Maker setting	Do not change.						
Pn52B	2	Overload Warning Level	1 to 100	1%	20	Immediately	Setup	–	4.3.8
Pn52C	2	Derating of Base Current at Detecting Overload of Motor	10 to 100	1%	100	After restart	Setup	–	
Pn52D	2	Reserved (Do not change.)	–	–	50	–	–	–	–
Pn52F	2	Reserved (Do not change.)	–	–	0FFF	–	–	–	–

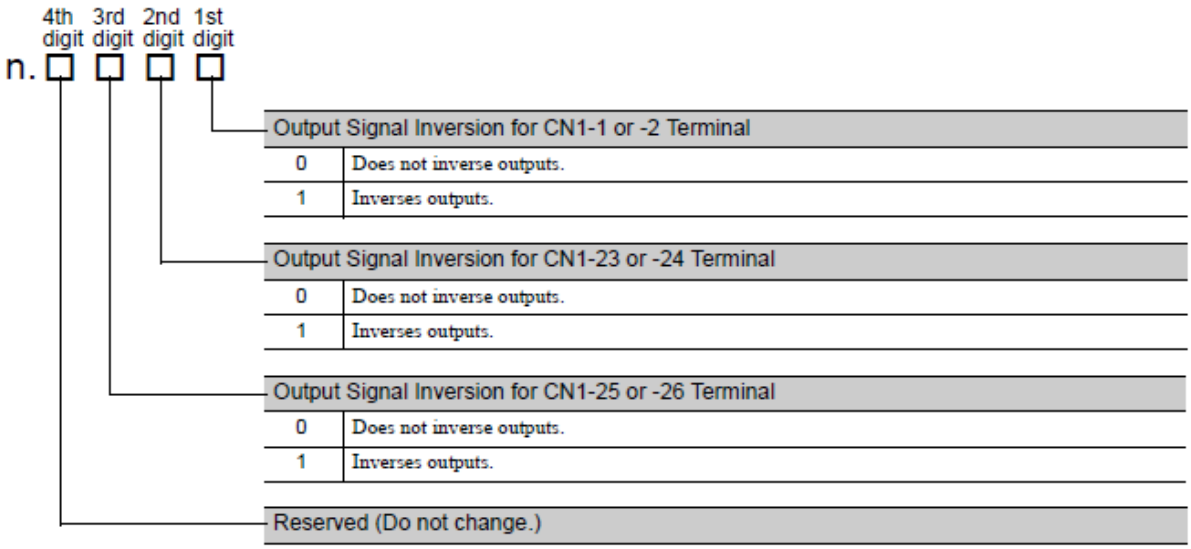

(cont'd)

Parameter No.	Size	Name	Setting Range	Units	Factory Setting	When Enabled	Classi-fication	Profile	Reference Section
Pn530	2	Program JOG Operation Related Switch	0000 to 0005	–	0000	Immediately	Setup	–	6.5
Pn531	4	Program JOG Movement Distance	1 to 1073741824	1 reference unit	32768	Immediately	Setup	–	6.5
Pn533	2	Program JOG Movement Speed	1 to 10000	1 min^{-1}	500	Immediately	Setup	–	
Pn534	2	Program JOG Acceleration/ Deceleration Time	2 to 10000	1 ms	100	Immediately	Setup	–	
Pn535	2	Program JOG Waiting Time	0 to 10000	1 ms	100	Immediately	Setup	–	
Pn536	2	Number of Times of Program JOG Movement	0 to 1000	1 time	1	Immediately	Setup	–	
Pn550	2	Analog Monitor 1 Offset Voltage	-10000 to 10000	0.1 V	0	Immediately	Setup	–	5.1.3
Pn551	2	Analog Monitor 2 Offset Voltage	-10000 to 10000	0.1 V	0	Immediately	Setup	–	
Pn552	2	Analog Monitor Magnification (×1)	-10000 to 10000	×0.01	100	Immediately	Setup	–	
Pn553	2	Analog Monitor Magnification (×2)	-10000 to 10000	×0.01	100	Immediately	Setup	–	
Pn560	2	Remained Vibration Detection Width	1 to 3000	0.1%	400	Immediately	Setup	–	5.7.1
Pn561	2	Overshoot Detection Level	0 to 100	1%	100	Immediately	Setup	–	5.3.1 5.4.1
Pn600	2	Regenerative Resistor Capacity *2	Depends on DRIVER Capacity *3	10 W	0	Immediately	Setup	–	3.7.2
Pn601	2	Reserved (Do not change.)	–	–	0	–	–	–	–

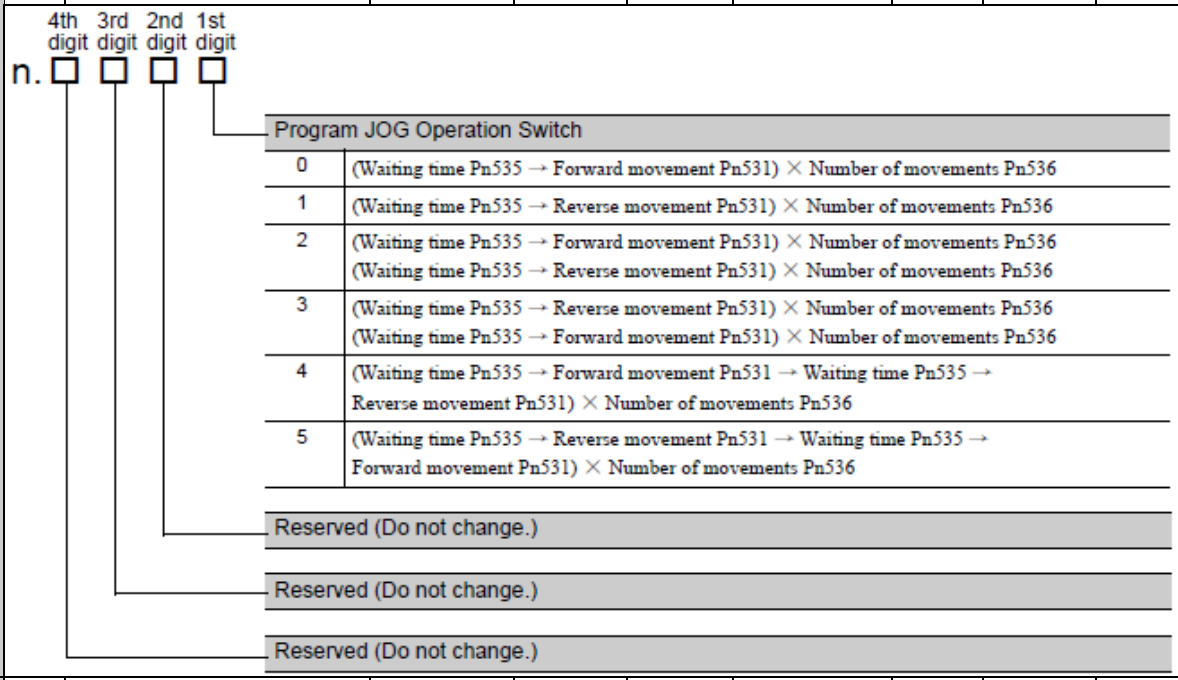

*2. Normally set to "0." When using an external regenerative resistor, set the capacity (W) of the regenerative resistor.

*3. The upper limit is the maximum output capacity (W) of the DRIVER.

(cont'd)

Parameter No.	Size	Name	Setting Range	Units	Factory Setting	When Enabled	Classi-fication	Profile	Reference Section
Pn800	2	Communications Control	–	–	1040	Immediately	Setup	–	–

n. □ □ □ □ (4th digit, 3rd digit, 2nd digit, 1st digit)

MECHATROLINK-III Communications Check Mask (for debug)

0	No mask
1	Ignores MECHATROLINK communications error (A.E6□).
2	Ignores WDT error (A.E5□).
3	Ignores both MECHATROLINK communications error (A.E6□) and WDT error (A.E5□).

Warning Check Mask

0	No mask
1	Ignores data setting warning (A.94□).
2	Ignores command warning (A.95□).
3	Ignores both data setting warning (A.94□) and command warning (A.95□).
4	Ignores communications warning (A.96□).
5	Ignores both data setting warning (A.94□) and communications warning (A.96□).
6	Ignores both command warning (A.95□) and communications warning (A.96□).
7	Ignores data setting warning (A.94□), command warning (A.95□) and communications warning (A.96□).
8	Ignores command warning 7 (A.97A) and data clamp (A.97B).
9	Ignores data setting warning (A.94□), command warning 7 (A.97A) and data clamp (A.97B).
A	Ignores command warning (A.95□) and command warning 7 (A.97A) and data clamp (A.97B).
B	Ignores data setting warning (A.94□), command warning (A.95□), command warning 7 (A.97A) and data clamp (A.97B).
C	Ignores communications warning (A.96□), command warning 7 (A.97A) and data clamp (A.97B).
D	Ignores data setting warning (A.94□), communications warning (A.96□), command warning 7 (A.97A) and data clamp (A.97B).
E	Ignores command warning (A.95□), communications warning (A.96□), command warning 7 (A.97A) and data clamp (A.97B).
F	Ignores data setting warning (A.94□), command warning (A.95□), communications warning (A.96□), command warning 7 (A.97A) and data clamp (A.97B).

Reserved (Do not change.)

Automatic warning-clear (for debug)*9

0	No warning-clear (for debug)
1	Automatic warning-clear (for MECHATROLINK-III specifications)

*9. This parameter is enabled only for MECHATROLINK-III standard servo profile.

(cont'd)

Parameter No.	Size	Name	Setting Range	Units	Factory Setting	When Enabled	Classi-fication	Profile	Reference Section
Pn801	2	Application Function Select 6 (Software LS)	–	–	0003	Immediately	Setup	–	4.3.3
Pn803	2	Origin Range	0 to 250	1 reference unit	10	Immediately	Setup	–	*1
Pn804	4	Forward Software Limit	-1073741823 to 1073741823	1 reference unit	1073741823	Immediately	Setup	–	4.3.3
Pn806	4	Reverse Software Limit	-1073741823 to 1073741823	1 reference unit	-1073741823	Immediately	Setup	–	4.3.3
Pn808	4	Absolute Encoder Origin Offset	-1073741823 to 1073741823	1 reference unit	0	Immediately*4	Setup	–	4.7.7
Pn80A	2	1st Linear Acceleration Constant	1 to 65535	10000 reference unit/s^2	100	Immediately*5	Setup	–	*1
Pn80B	2	2nd Linear Acceleration Constant	1 to 65535	10000 reference unit/s^2	100	Immediately*5	Setup	–	*1
Pn80C	2	Acceleration Constant Switching Speed	0 to 65535	100 reference unit/s	0	Immediately*5	Setup	–	*1
Pn80D	2	1st Linear Deceleration Constant	1 to 65535	10000 reference unit/s^2	100	Immediately*5	Setup	–	*1

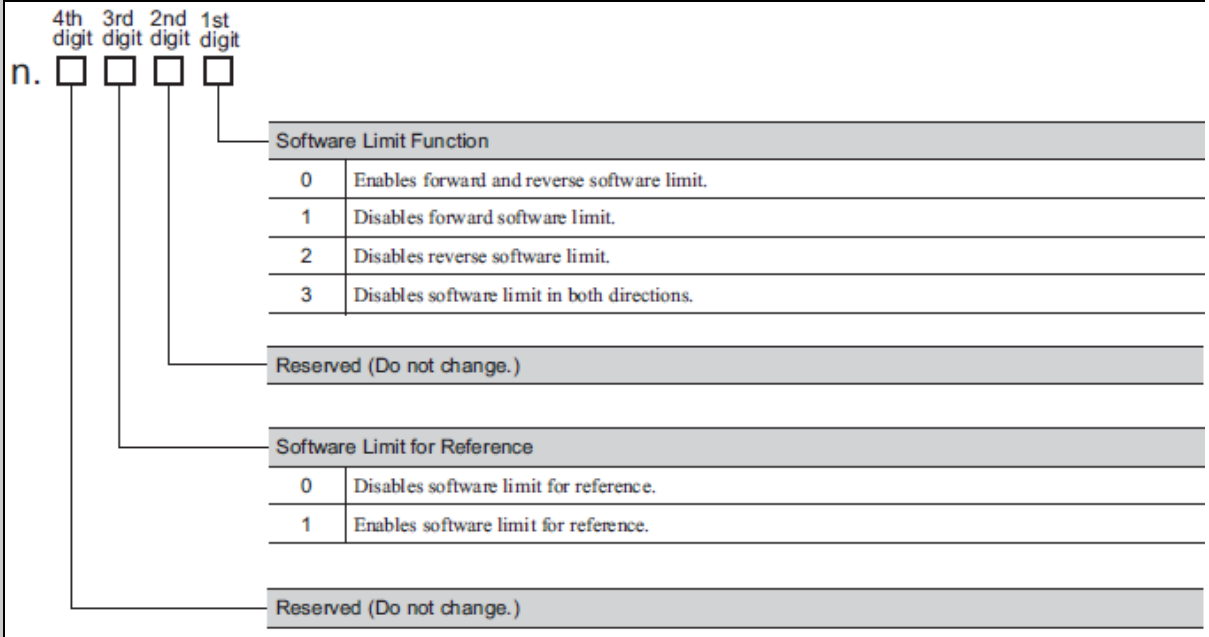

*1. For details, refer to *8 MECHATROLINK-III Commands*.
*4. Available after the SENS_ON command is input.
*5. Change the setting when the reference is stopped (DEN is set to 1), because the change will affect the output during operation.

(cont'd)

Parameter No.	Size	Name	Setting Range	Units	Factory Setting	When Enabled	Classi-fication	Profile	Reference Section
Pn80E	2	2nd Linear Deceleration Constant	1 to 65535	10000 reference unit/s^2	100	Immediately*5	Setup	–	*1
Pn80F	2	Deceleration Constant Switching Speed	0 to 65535	100 reference unit/s	0	Immediately*5	Setup	–	*1
Pn810	2	Exponential Function Acceleration/Deceleration Bias	0 to 65535	100 reference unit/s	0	Immediately*6	Setup	–	*1
Pn811	2	Exponential Function Acceleration/Deceleration Time Constant	0 to 5100	0.1 ms	0	Immediately*6	Setup	–	*1
Pn812	2	Movement Average Time	0 to 5100	0.1 ms	0	Immediately*6	Setup	–	*1
Pn814	4	Final Travel Distance for External Positioning	-1073741823 to 1073741823	1 reference unit	100	Immediately	Setup	–	*1
Pn816	2	Homing Mode Setting	–	–	0000	Immediately	Setup	M2*10	–
Pn817*7	2	Homing Approach Speed (Homing Approach Speed 1)	0 to 65535	100 reference unit/s	50	Immediately*5	Setup	–	*1
Pn818*8	2	Homing Creep Speed(Homing Approach Speed 2)	0 to 65535	100 reference unit/s	5	Immediately*5	Setup	–	*1
Pn819	4	Final Travel Distance for Homing	-1073741823 to 1073741823	1 reference unit	100	Immediately	Setup	–	*1

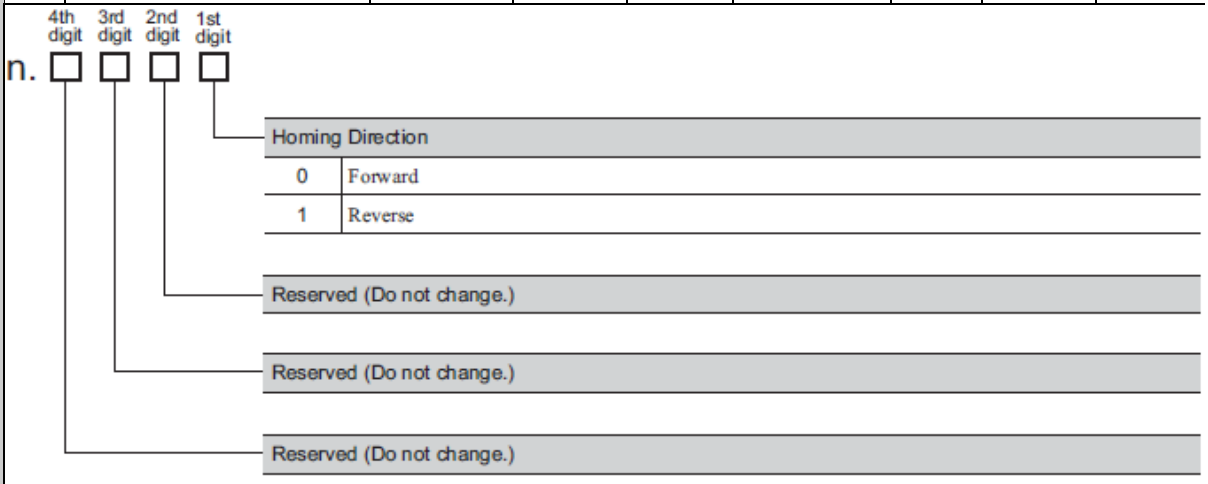

∗1. For details, refer to *8 MECHATROLINK-III Commands*.
∗5. Change the setting when the reference is stopped (DEN is set to 1), because the change will affect the output during operation.
∗6. The settings are updated only if the sending of the reference has been stopped (DEN is set to 1).
∗7. The set value of Pn842 is valid when the set value of Pn817 is 0. Software version 0023 or higher is required to use Pn842.
∗8. The set value of Pn844 is valid when the set value of Pn818 is 0. Software version 0023 or higher is required to use Pn844.
∗10. This parameter is enabled only for MECHATROLINK-II-compatible profile.

(cont'd)

Parameter No.	Size	Name	Setting Range	Units	Factory Setting	When Enabled	Classi-fication	Profile	Reference Section
Pn81E	2	Input Signal Monitor Selection	–	–	0000	Immediately	Setup	M2*10	–
Pn81F	2	Command Data Allocation	–	–	0010	After restart	Setup	M2*10	*1
Pn820	4	Forward Latching Allowable Area	-2147483648 to 2147483647	1 reference unit	0	Immediately	Setup	–	*1
Pn822	4	Reverse Latching Allowable Area	-2147483648 to 2147483647	1 reference unit	0	Immediately	Setup	–	*1

Pn81E — n. □ □ □ □ (4th digit, 3rd digit, 2nd digit, 1st digit)

IO12 Signal Mapping

0	No mapping
1	Monitors CN1-13 input terminal.
2	Monitors CN1-7 input terminal.
3	Monitors CN1-8 input terminal.
4	Monitors CN1-9 input terminal.
5	Monitors CN1-10 input terminal.
6	Monitors CN1-11 input terminal.
7	Monitors CN1-12 input terminal.

IO13 Signal Mapping

0 to 7	Same as IO2 signal mapping.

IO14 Signal Mapping

0 to 7	Same as IO2 signal mapping.

IO15 Signal Mapping

0 to 7	Same as IO2 signal mapping.

Pn81F — n. □ □ □ □ (4th digit, 3rd digit, 2nd digit, 1st digit)

Option Field Allocation

0	Disables OPTION bit allocation.
1	Enables OPTION bit allocation.

Position Control Command TFF/TLIM Function Allocation

0	Disables allocation.
1	Enables allocation.

Reserved (Do not change.)

Reserved (Do not change.)

*1. For details, refer to *8 MECHATROLINK-III Commands*.

*10. This parameter is enabled only for MECHATROLINK-II-compatible profile.

(cont'd)

Parameter No.	Size	Name		Setting Range	Units	Factory Setting	When Enabled	Classi-fication	Profile	Reference Section
Pn824	2	Option Monitor 1 Selection		–	–	0000	Immediately	Setup	–	*1
		0000H	Motor rotating speed [1000000H/overspeed detection position]							
		0001H	Speed reference [1000000H/overspeed detection position]							
		0002H	Torque [1000000H/max. torque]							
		0003H	Position error (lower 32 bits) [reference unit]							
		0004H	Position error (upper 32 bits) [reference unit]							
		0005H	System reserved							
		0006H	System reserved							
		000AH	Encoder count (lower 32 bits) [reference unit]							
		000BH	Encoder count (upper 32 bits) [reference unit]							
		000CH	FPG count (lower 32 bits) [reference unit]							
		000DH	FPG count (upper 32 bits) [reference unit]							
		0010H	Un000: Motor rotating speed [min^{-1}]							
		0011H	Un001: Speed reference [min^{-1}]							
		0012H	Un002: Torque reference [%]							
		0013H	Un003: Rotational angle 1 (encoder pulses from the phase-C origin: decimal display)							
		0014H	Un004: Rotational angle 2 [deg]							
		0015H	Un005: Input signal monitor							
		0016H	Un006: Output signal monitor							
		0017H	Un007: Input position reference speed [min^{-1}]							
		0018H	Un008: Position error [reference unit]							
		0019H	Un009: Accumulated load ratio [%]							
		001AH	Un00A: Regenerative load ratio [%]							
		001BH	Un00B: DB resistance consumption power [%]							
		001CH	Un00C: Input reference counter [reference unit]							
		001DH	Un00D: Feedback pulse counter [encoder pulse]							
		001EH	Un00E: Fully-closed loop feedback pulse counter [external encoder resolution]							
		001FH	System reserved							
		0023H	Primary multi-turn data [Rev]							
		0024H	Primary incremental data [pulse]							
		0027H	Un022: Installation environment monitor							
		0080H	Previous value of latched feedback position (LPOS) [encoder pulse]							
		0081H	Previous value of latched feedback position (LPOS2) [encoder pulse]						M3*9	
		0084H	Continuous latch status							
		Others	Reserved (Do not set.)							

*1. For details, refer to *8 MECHATROLINK-III Commands*.

*9. This parameter is enabled only for MECHATROLINK-III standard servo profile.

(cont'd)

Parameter No.	Size	Name	Setting Range	Units	Factory Setting	When Enabled	Classi-fication	Profile	Reference Section
Pn825	2	Option Monitor 2 Selection	–	–	0000	Immediately	Setup	–	*1
		0000H to 0084H: Same as Option Monitor 1 Selection.							
Pn827	2	Linear Deceleration Constant 1 for Stopping	1 to 65535	10000 reference unit/s^2	100	Immediately*5	Setup	–	*1
Pn829	2	SVOFF Waiting Time (SVOFF at deceleration to stop)	0 to 65535	10 ms	0	Immediately*5	Setup	–	*1
Pn82A	2	Option Field Allocation 1	0000 to 1E1E	–	1813	After restart	Setup	M2*10	–
Pn82B	2	Option Field Allocation 2	0000 to 1F1F	–	1D1C	After restart	Setup	M2*10	–

Pn82A

n. □ □ □ □ (4th digit, 3rd digit, 2nd digit, 1st digit)

0 to E	ACCFIL bit position
0	Disables ACCFIL bit allocation.
1	Enables ACCFIL bit allocation.
0 to E	GSEL bit position
0	Disables GSEL bit allocation.
1	Enables GSEL bit allocation.

Pn82B

n. □ □ □ □ (4th digit, 3rd digit, 2nd digit, 1st digit)

0 to F	V_PPI bit position
0	Disables V_PPI bit allocation.
1	Enables V_PPI bit allocation.
0 to F	P_PI_CLR bit position
0	Disables P_PI_CLR bit allocation.
1	Enables P_PI_CLR bit allocation.

*1. For details, refer to *8 MECHATROLINK-III Commands*.

*5. Change the setting when the reference is stopped (DEN is set to 1), because the change will affect the output during operation.

*10. This parameter is enabled only for MECHATROLINK-II-compatible profile.

(cont'd)

Parameter No.	Size	Name	Setting Range	Units	Factory Setting	When Enabled	Classi-fication	Profile	Reference Section
Pn82C	2	Option Field Allocation 3	0000 to 1F1F	–	1F1E	After restart	Setup	M2*10	–

n. □ □ □ □ (4th digit, 3rd digit, 2nd digit, 1st digit)

0 to F	P_CL bit position
0	Disables P_CL bit allocation.
1	Enables P_CL bit allocation.
0 to F	N_CL bit position
0	Disables N_CL bit allocation.
1	Enables N_CL bit allocation.

Pn82D	2	Option Field Allocation 4	0000 to 1F1C	–	0000	After restart	Setup	M2*10	–

n. □ □ □ □ (4th digit, 3rd digit, 2nd digit, 1st digit)

0 to C	BANK_SEL1 bit position
0	Disables BANK_SEL1 bit allocation.
1	Enables BANK_SEL1 bit allocation.
0 to F	LT_DISABLE bit position
0	Disables LT_DISABLE bit allocation.
1	Enables LT_DISABLE bit allocation.

Pn82E	2	Option Field Allocation 5	0000 to 1D1F	–	0000	After restart	Setup	M2*10	–

n. □ □ □ □ (4th digit, 3rd digit, 2nd digit, 1st digit)

Reserved (Do not change.)	
Reserved (Do not change.)	
0 to D	OUT_SIGNAL bit position
0	Disables OUT_SIGNAL bit allocation.
1	Enables OUT_SIGNAL bit allocation.

*10. This parameter is enabled only for MECHATROLINK-II-compatible profile.

(cont'd)

Parameter No.	Size	Name	Setting Range	Units	Factory Setting	When Enabled	Classi-fication	Profile	Reference Section
Pn833	2	Motion Setting	0000 to 0001	–	0000	After restart	Setup	–	*1
Pn834	4	1st Linear Acceleration Constant 2	1 to 20971520	10000 reference unit/s^2	100	Immediately *5	Setup	–	*1
Pn836	4	2nd Linear Acceleration Constant 2	1 to 20971520	10000 reference unit/s	100	Immediately *5	Setup	–	*1
Pn838	4	Acceleration Constant Switching Speed 2	0 to 2097152000	1 reference unit/s	0	Immediately *5	Setup	–	*1
Pn83A	4	1st Linear Deceleration Constant 2	1 to 20971520	10000 reference unit/s^2	100	Immediately *5	Setup	–	*1
Pn83C	4	2nd Linear Deceleration Constant 2	1 to 20971520	10000 reference unit/s^2	100	Immediately *5	Setup	–	*1
Pn83E	4	Deceleration Constant Switching Speed 2	0 to 2097152000	1 reference unit/s	0	Immediately *5	Setup	–	*1
Pn840	4	Linear Deceleration Constant 2 for Stopping	1 to 20971520	10000 reference unit/s^2	100	Immediately *5	Setup	–	*1
Pn842[*7]	4	Homing Approach Speed (Homing Approach Speed 12)	0 to 20971520	100 reference unit/s	0	Immediately *5	Setup	–	*1
Pn844[*8]	4	Homing Creep Speed (Homing Approach Speed 22)	0 to 20971520	100 reference unit/s	0	Immediately *5	Setup	–	*1
Pn850	2	Latch Sequence Number	0 to 8	–	0	Immediately	Setup	–	*1
Pn851	2	Continuous Latch Count	0 to 255	–	0	Immediately	Setup	–	*1

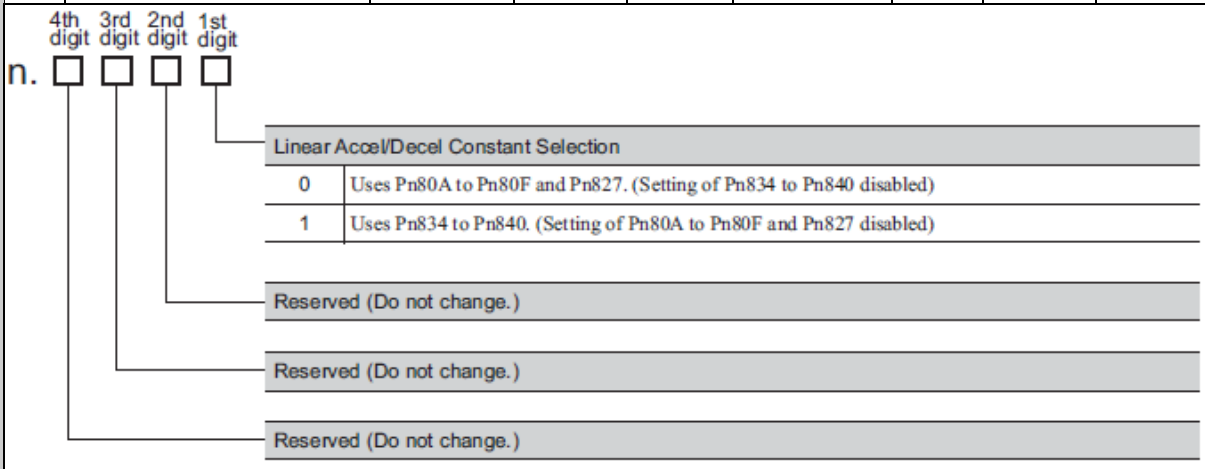

∗1. For details, refer to *8 MECHATROLINK-III Commands*.

∗5. Change the setting when the reference is stopped (DEN is set to 1), because the change will affect the output during operation.

∗7. The set value of Pn842 is valid when the set value of Pn817 is 0. Software version 0023 or higher is required to use Pn842.

∗8. The set value of Pn844 is valid when the set value of Pn818 is 0. Software version 0023 or higher is required to use Pn844.

(cont'd)

Parameter No.	Size	Name	Setting Range	Units	Factory Setting	When Enabled	Classi-fication	Profile	Reference Section
Pn852	2	Latch Sequence Signal 1 to 4 Setting	0000 to 3333	–	0000	Immediately	Setup	–	*1

n. □ □ □ □ (4th digit, 3rd digit, 2nd digit, 1st digit)

Latch sequence 1 signal selection.

0	Phase C
1	EXT1 signal
2	EXT2 signal
3	EXT3 signal

Latch sequence 2 signal selection.

0 to 3	Same as latch sequence 1 signal selection.

Latch sequence 3 signal selection.

0 to 3	Same as latch sequence 1 signal selection.

Latch sequence 4 signal selection.

0 to 3	Same as latch sequence 1 signal selection.

Parameter No.	Size	Name	Setting Range	Units	Factory Setting	When Enabled	Classi-fication	Profile	Reference Section
Pn853	2	Latch Sequence Signal 5 to 8 Setting	0000 to 3333	–	0000	Immediately	Setup	–	*1

n. □ □ □ □ (4th digit, 3rd digit, 2nd digit, 1st digit)

Latch sequence 5 signal selection

0	Phase C
1	EXT1 signal
2	EXT2 signal
3	EXT3 signal

Latch sequence 6 signal selection.

0 to 3	Same as latch sequence 5 signal selection.

Latch sequence 7 signal selection.

0 to 3	Same as latch sequence 5 signal selection.

Latch sequence 8 signal selection.

0 to 3	Same as latch sequence 5 signal selection.

*1. For details, refer to *8 MECHATROLINK-III Commands*.

(cont'd)

Parameter No.	Size	Name	Setting Range	Units	Factory Setting	When Enabled	Classi-fication	Profile	Reference Section
Pn860	2	SVCMD_IO (input signal monitor) Allocation 1	0000 to 1717	–	0000	Immediately	Setup	M3*9	–

n. □ □ □ □ (4th digit, 3rd digit, 2nd digit, 1st digit)

0 to 7	Bit position of CN1-13 input terminal monitor
0	Disables bit allocation for CN1-13 input terminal monitor.
1	Enables bit allocation for CN1-13 input terminal monitor.
0 to 7	Bit position of CN1-7 input terminal monitor
0	Disables bit allocation for CN1-7 input terminal monitor.
1	Enables bit allocation for CN1-7 input terminal monitor.

Pn861	2	SVCMD_IO (input signal monitor) Allocation 2	0000 to 1717	–	0000	Immediately	Setup	M3*9	–

n. □ □ □ □ (4th digit, 3rd digit, 2nd digit, 1st digit)

0 to 7	Bit position of CN1-8 input terminal monitor
0	Disables bit allocation for CN1-8 input terminal monitor.
1	Enables bit allocation for CN1-8 input terminal monitor.
0 to 7	Bit position of CN1-9 input terminal monitor
0	Disables bit allocation for CN1-9 input terminal monitor.
1	Enables bit allocation for CN1-9 input terminal monitor.

Pn862	2	SVCMD_IO (input signal monitor) Allocation 3	0000 to 1717	–	0000	Immediately	Setup	M3*9	–

n. □ □ □ □ (4th digit, 3rd digit, 2nd digit, 1st digit)

0 to 7	Bit position of CN1-10 input terminal monitor
0	Disables bit allocation for CN1-10 input terminal monitor.
1	Enables bit allocation for CN1-10 input terminal monitor.
0 to 7	Bit position of CN1-11 input terminal monitor
0	Disables bit allocation for CN1-11 input terminal monitor.
1	Enables bit allocation for CN1-11 input terminal monitor.

*9. This parameter is enabled only for MECHATROLINK-III standard servo profile.

(cont'd)

Parameter No.	Size	Name	Setting Range	Units	Factory Setting	When Enabled	Classi-fication	Profile	Reference Section
Pn863	2	SVCMD_IO (input signal monitor) Allocation 4	0000 to 1717	–	0000	Immediately	Setup	M3*9	–
	n. □□□□ (4th digit, 3rd digit, 2nd digit, 1st digit)								
	1st digit	0 to 7: Bit position of CN1-12 input terminal monitor							
	2nd digit	0: Disables bit allocation for CN1-12 input terminal monitor. 1: Enables bit allocation for CN1-12 input terminal monitor.							
	3rd digit	Reserved (Do not change.)							
	4th digit	Reserved (Do not change.)							
Pn864	2	SVCMD_IO (input signal monitor) Allocation 5	0000 to 1717	–	0000	Immediately	Setup	M3*9	–
	n. □□□□ (4th digit, 3rd digit, 2nd digit, 1st digit)								
	1st digit	Reserved (Do not change.)							
	2nd digit	Reserved (Do not change.)							
	3rd digit	Reserved (Do not change.)							
	4th digit	Reserved (Do not change.)							
Pn865	2	SVCMD_IO (input signal monitor) Allocation 6	0000 to 1717	–	0000	Immediately	Setup	M3*9	–
	n. □□□□ (4th digit, 3rd digit, 2nd digit, 1st digit)								
	1st digit	Reserved (Do not change.)							
	2nd digit	Reserved (Do not change.)							
	3rd digit	Reserved (Do not change.)							
	4th digit	Reserved (Do not change.)							
Pn866	2	SVCMD_IO (input signal monitor) Allocation 7	0000 to 1717	–	0000	Immediately	Setup	M3*9	–
	n. □□□□ (4th digit, 3rd digit, 2nd digit, 1st digit)								
	1st digit	Reserved (Do not change.)							
	2nd digit	Reserved (Do not change.)							
	3rd digit	Reserved (Do not change.)							
	4th digit	Reserved (Do not change.)							

*9. This parameter is enabled only for MECHATROLINK-III standard servo profile.

(cont'd)

Parameter No.	Size	Name	Setting Range	Units	Factory Setting	When Enabled	Classi-fication	Profile	Reference Section
Pn868	2	SVCMD_IO (output signal monitor) Allocation 1	0000 to 1717	–	0000	Immediately	Setup	M3*9	–
Pn869	2	SVCMD_IO (output signal monitor) Allocation 2	0000 to 1717	–	0100	Immediately	Setup	M3*9	–
Pn880	2	Station Address Monitor (for maintenance, read only)	03 to EFH	–	0	Immediately	Setup	–	–
Pn881	2	Setting Transmission Byte Monitor [byte] (for maintenance, read only)	17, 32, 48	–	0	Immediately	Setup	–	–

Pn868

n. □ □ □ □ (4th digit, 3rd digit, 2nd digit, 1st digit)

Allocation for CN1-1, -2 Output Signal Monitor (SVCMD-IO)

0	Sets CN1-1, -2 output terminal monitor to D24 (IO1_STS1).
1	Sets CN1-1, -2 output terminal monitor to D25 (IO2_STS1).
2	Sets CN1-1, -2 output terminal monitor to D26 (IO3_STS1).
3	Sets CN1-1, -2 output terminal monitor to D27 (IO4_STS1).
4	Sets CN1-1, -2 output terminal monitor to D28 (IO5_STS1).
5	Sets CN1-1, -2 output terminal monitor to D29 (IO6_STS1).
6	Sets CN1-1, -2 output terminal monitor to D30 (IO7_STS1).
7	Sets CN1-1, -2 output terminal monitor to D31 (IO8_STS1).

CN1-1, -2 Output Signal Monitor Selection

0	Disables bit allocation for CN1-1, -2 output terminal monitor.
1	Enables bit allocation for CN1-1, -2 output terminal monitor.

Allocation for CN1-23, -24 Output Signal Monitor (SVCMD_IO)

0 to 7	Same as the allocation for CN1-1, -2 output signal monitor.

CN1-23, -24 Output Signal Monitor Selection

0	Disables bit allocation for CN1-23, -24 output terminal monitor.
1	Enables bit allocation for CN1-23, -24 output terminal monitor.

Pn869

n. □ □ □ □ (4th digit, 3rd digit, 2nd digit, 1st digit)

Allocation for CN1-25, -26 Output Signal Monitor (SVCMD_IO)

0 to 7	Same as the allocation for CN1-1, -2 output signal monitor.

CN1-25, -26 Output Signal Monitor Selection

0	Disables bit allocation for CN1-25, -26 output terminal monitor.
1	Enables bit allocation for CN1-25, -26 output terminal monitor.

Reserved (Do not change.)

Reserved (Do not change.)

∗9. This parameter is enabled only for MECHATROLINK-III standard servo profile.

(cont'd)

Parameter No.	Size	Name	Setting Range	Units	Factory Setting	When Enabled	Classi-fication	Profile	Reference Section
Pn882	2	Transmission Cycle Setting Monitor [0.25 μs] (for maintenance, read only)	0 to FFFFH	–	0	Immediately	Setup	–	–
Pn883	2	Communications Cycle Setting Monitor [x transmission cycle] (for maintenance, read only)	0 to 32	–	0	Immediately	Setup	–	–
Pn88A	2	MECHATROLINK Receive Error Counter Monitor (for maintenance, read only)	0 to 65535	–	0	Immediately	Setup	–	–
Pn890 to Pn8A6	4	Command Data Monitor at Alarm/Warning Occurs (for maintenance, read only)	0 to FFFFFFFFH	–	0	Immediately	Setup	–	*1
Pn8A8 to Pn8BE	4	Response Data Monitor at Alarm/Warning Occurs (for maintenance, read only)	0 to FFFFFFFFH	–	0	Immediately	Setup	–	*1
Pn900	2	Parameter Bank Number	0 to 16	–	0	After restart	Setup	–	*1
Pn901	2	Parameter Bank Member Number	0 to 15	–	0	After restart	Setup	–	*1
Pn902 to Pn910	2	Parameter Bank Member Definition	0000H to 08FFH	–	0	After restart	Setup	–	*1
Pn920 to Pn95F	2	Parameter Bank Data (non-volatile memory save disabled)	0000H to FFFFH	–	0	Immediately	Setup	–	*1

*1. For details, refer to *8 MECHATROLINK-III Commands*.

10.1.3 MECHATROLINK-III Common Parameters

The following list shows the common parameters used by all devices for MECHATROLINK-III. These common parameters are used to make settings from the host PC or PLC...etc via MECHATROLINK communications. Do not change settings with the digital operator or any other device.

Parameter No.	Size	Name		Setting Range	Units [Resolution]	Factory Setting	When Enabled	Classification
01 PnA02	4	Encoder Type (read only)		0 to 1	–	–	–	Device Information Related Parameters
		0000H	Absolute encoder					
		0001H	Incremental encoder					
02 PnA04	4	Motor Type (read only)		0 to 1	–	–	–	
		0000H	Rotational servomotor					
03 PnA06	4	Semi-closed/Fully-closed Type (read only)		0 to 1	–	–	–	
		0000H	Semi-closed					
		0001H	Fully-closed					
04 PnA08	4	Rated Speed (read only)		0 to FFFFFFFFH	min^{-1}	–	–	
05 PnA0A	4	Maximum Output Speed (read only)		0 to FFFFFFFFH	min^{-1}	–	–	
06 PnA0C	4	Speed Multiplier (read only)		-1073741823 to 1073741823	–	–	–	
07 PnA0E	4	Rated Torque (read only)		0 to FFFFFFFFH	N.m	–	–	
08 PnA10	4	Maximum Output Torque (read only)		0 to FFFFFFFFH	N.m	–	–	
09 PnA12	4	Torque Multiplier (read only)		-1073741823 to 1073741823	–	–	–	
0A PnA14	4	Resolution (read only)		0 to FFFFFFFFH	pulse/rev	–	–	
21 PnA42	4	Electronic Gear Ratio (Numerator)		1 to 1073741824	–	1	After restart	Machine Specification Related Parameters
22 PnA44	4	Electronic Gear Ratio (Denominator)		1 to 1073741824	–	1	After restart	
23 PnA46	4	Absolute Encoder Origin Offset		–1073741823 to 1073741823	1 reference unit	0	Immediately*1	
24 PnA48	4	Multiturn Limit Setting		0 to 65535	Rev	65535	After restart	
25 PnA4A	4	Limit Setting		0 to 33H	0000H	0000H	After restart	
		Bit 0	P-OT (0: Enabled, 1: Disabled)					
		Bit 1	N-OT (0: Enabled, 1: Disabled)					
		Bit 2	Reserved					
		Bit 3	Reserved					
		Bit 4	P-SOT (0: Disabled, 1: Enabled)					
		Bit 5	N-SOT (0: Disabled, 1: Enabled)					
		Bit 6	Reserved					
		Bit 7 to 31	Reserved					

∗1. Available after the SENS_ON command is input.

Note: When using parameters that are enabled after restarting the DRIVER, a CONFIG command must be input or the power must be turned OFF and then ON again.

(cont'd)

Parameter No.	Size	Name	Setting Range	Units [Resolution]	Factory Setting	When Enabled	Classification
26 PnA4C	4	Forward Software Limit	–1073741823 to 1073741823	1 reference unit	1073741823	Immediately	Machine Specification Related Parameters
27 PnA4E	4	Reserved (Do not use.)	–	–	0	Immediately	
28 PnA50	4	Reverse Software Limit	–1073741823 to 1073741823	1 reference unit	–1073741823	Immediately	
29 PnA52	4	Reserved (Do not use.)	–	–	0	Immediately	
41 PnA82	4	Speed Unit*2	0 to 4	–	0	After restart	Unit System Related Parameters
		0000H reference unit/sec					
		0001H reference unit/min					
		0002H Percentage (%) of rated speed*3					
		0003H min^{-1}*3					
		0004H Max. motor speed/40000000H*4					
42 PnA84	4	Speed Base Unit (Set the value of "n" used as the exponent in 10^n when calculating the Speed Unit (41).)*3*4	–3 to 3	–	0	After restart	
43 PnA86	4	Position Unit	0	–	0	After restart	
		0000H reference unit					
44 PnA88	4	Position Base Unit (Set the value of "n" used as the exponent in 10^n when calculating the Position Unit (43).)	0	–	0	After restart	
45 PnA8A	4	Acceleration Unit	–	–	0	After restart	
		0000H reference unit/sec^2					
		0001H Not supported					
46 PnA8C	4	Acceleration Base Unit (Set the value of "n" used as the exponent in 10^n when calculating the Acceleration Unit (45).)	4 to 6	–	4	After restart	
47 PnA8E	4	Torque Unit	1 to 2	–	1	After restart	
		0000H Not supported					
		0001H Percentage (%) of rated torque					
		0002H Max. torque/40000000H*5					
48 PnA90	4	Torque Base Unit*5 (Set the value of "n" used as the exponent in 10^n when calculating the Torque Unit (47).)	–5 to 0	–	0	After restart	

∗2. When using fully-closed loop control, set 0000H (Reference unit/sec).

∗3. When either 0002H or 0003H is selected for the Speed Unit (parameter 41), set the Speed Base Unit (parameter 42) to a number between -3 and 0.

∗4. When 0004H is selected for the Speed Unit (parameter 41), set the Speed Base Unit (parameter 42) to 0.

∗5. When 0002H is selected for the Torque Unit (parameter 47), set the Torque Base Unit (parameter 48) to 0.

Note: When using parameters that are enabled after restarting the DRIVER, a CONFIG command must be input or the power must be turned OFF and then ON again.

(cont'd)

Parameter No.	Size	Name		Setting Range	Units [Resolution]	Factory Setting	When Enabled	Classification
49 PnA92	4	Compliance Unit System (read only)		–	–	0601011FH	–	Unit System Related Parameters
		Speed						
		Bit 0	reference unit/s (1: Enabled)					
		Bit 1	reference unit/min (1: Enabled)					
		Bit 2	Percentage (%) of rated speed (1: Enabled)					
		Bit 3	min^{-1} (rpm) (1: Enabled)					
		Bit 4	Max. motor speed/4000000H (1: Enabled)					
		Bit 5 to 7	Reserved (0: Disabled)					
		Position						
		Bit 8	reference unit (1: Enabled)					
		Bit 9 to 15	Reserved (0: Disabled)					
		Acceleration						
		Bit 16	reference unit/s^2 (1: Enabled)					
		Bit 17	msec (Acceleration time taken to reach the rated speed) (0: Disabled)					
		Bit 18 to 23	Reserved (0: Disabled)					
		Torque						
		Bit 24	N.m (N) (0: Disabled)					
		Bit 25	Percentage (%) of rated torque (1: Enabled)					
		Bit 26	Max. torque/40000000H (1: Enabled)					
		Bit 27 to 31	Reserved (0: Disabled)					
61 PnAC2	4	Speed Loop Gain		1000 to 2000000	0.001 Hz [0.1 Hz]	40000	Immediately	Adjustment Related Parameters
62 PnAC4	4	Speed Loop Integral Time Constant		150 to 512000	μs [0.01 ms]	20000	Immediately	
63 PnAC6	4	Position Loop Gain		1000 to 2000000	0.001/s [0.1/s]	40000	Immediately	
64 PnAC8	4	Feedforward Compensation		0 to 100	1%	0	Immediately	
65 PnACA	4	Position Loop Integral Time Constant		0 to 5000000	μs [0.1 ms]	0	Immediately	
66 PnACC	4	Positioning Completed Width		0 to 1073741824	1 reference unit	7	Immediately	
67 PnACE	4	NEAR Signal Width		1 to 1073741824	1 reference unit	1073741824	Immediately	

(cont'd)

Parameter No.	Size	Name	Setting Range	Units [Resolution]	Factory Setting	When Enabled	Classification
81 PnB02	4	Exponential Function Accel/Decel Time Constant	0 to 510000	μs [0.1 ms]	0	Immediately*6	Command Related Parameters
82 PnB04	4	Movement Average Time	0 to 510000	μs [0.1 ms]	0	Immediately*6	
83 PnB06	4	Final Travel Distance for External Positioning	–1073741823 to 1073741823	1 reference unit	100	Immediately	
84 PnB08	4	Homing Approach Speed	0 to 3FFFFFFFH	10^{-3} min^{-1}	5000 Value converted reference/s into $10^{-3}min^{-1}$	Immediately	
85 PnB0A	4	Homing Creep Speed	0 to 3FFFFFFFH	10^{-3} min^{-1}	500 Value converted reference/s into $10^{-3}min^{-1}$	Immediately	
86 PnB0C	4	Final Travel Distance for Homing	–1073741823 to 1073741823	1 reference unit	100	Immediately	
87 PnB0E	4	Monitor Selection 1	0 to F	–	1	Immediately	
		0000H	APOS				
		0001H	CPOS				
		0002H	PERR				
		0003H	LPOS1				
		0004H	LPOS2				
		0005H	FSPD				
		0006H	CSPD				
		0007H	TRQ				
		0008H	ALARM				
		0009H	MPOS				
		000AH	Reserved (Undefined value)				
		000BH	Reserved (Undefined value)				
		000CH	CMN1 (Common monitor 1)				
		000DH	CMN2 (Common monitor 2)				
		000EH	OMN1 (Optional monitor 1)				
		000FH	OMN2 (Optional monitor 2)				
88 PnB10	4	Monitor Selection 2	–	–	0	Immediately	
		0000H to 000FH	Same as Monitor Selection 1.				

∗6. Change the setting when the reference is stopped (DEN is set to 1), because the change will affect the output during operation.

(cont'd)

Parameter No.	Size	Name	Setting Range	Units [Resolution]	Factory Setting	When Enabled	Classification
89 PnB12	4	Monitor Selection for SEL_MON1 (CMN1)	0 to 6	–	0	Immediately	Command Related Parameters

0000H	TPOS (Target position in the reference coordinates)
0001H	IPOS (Reference position in the reference coordinates)
0002H	POS_OFSET (Offset value set in the set coordinates command (POS_SET))
0003H	TSPD (Target speed)
0004H	SPD_LIM (Speed limit value)
0005H	TRQ_LIM (Torque limit value)

0006H

SV_STAT
Monitor
Byte 1: Current communications phase
00H: Phase 0
01H: Phase 1
02H: Phase 2
03H: Phase 3
Byte 2: Current control mode
00H: Position control mode
01H: Speed control mode
02H: Torque control mode
Byte 3: Reserved
Byte 4: Expansion signal monitor

Bit	Name	Contents	Value	Setting
Bit 0	LT_RDY1	Processing status for latch detection specified by SVCMD_CTRL, LT_REQ1	0	Latch detection not processed
			1	During latch detection processing
Bit 1	LT_RDY1	Processing status for latch detection specified by SVCMD_CTRL, LT_REQ2	0	Latch detection not processed
			1	During latch detection processing
Bit 2, Bit 3	LT_SEL1R	Latch signal	0	Phase C
			1	External input signal 1
			2	External input signal 2
			3	External input signal 3
Bit 4, Bit 5	LT_SEL2R	Latch signal	0	Phase C
			1	External input signal 1
			2	External input signal 2
			3	External input signal 3
Bit 6	Reserved (0)			

(cont'd)

Parameter No.	Size	Name		Setting Range	Units [Resolution]	Factory Setting	When Enabled	Classification
8A PnB14	4	Monitor Selection for SEL_MON2 (CMN2)		0 to 6	–	0	Immediately	Command Related Parameters
		0000H to 0006H	Same as Monitor Selection for SEL_MON1.					
8B PnB16	4	Origin Detection Range		0 to 250	1 reference unit	10	Immediately	
8C PnB18	4	Forward Torque Limit		0 to 800	1%	100	Immediately	
8D PnB1A	4	Reverse Torque Limit		0 to 800	1%	100	Immediately	
8E PnB1C	4	Zero Speed Detection Range		1000 to 10000000	10^{-3} min^{-1}	20000	Immediately	
8F PnB1E	4	Speed Coincidence Signal Output Width (read only)		0 to 100000	10^{-3} min^{-1}	10000	Immediately	
90 PnB20	4	Servo Command Control Field Enabled/Disabled (read only)		–	–	0FFF3F3FH	–	
		Bit 0	CMD_PAUSE (1: Enabled)					
		Bit 1	CMD_CANCEL (1: Enabled)					
		Bit 2, 3	STOP_MODE (1: Enabled)					
		Bit 4, 5	ACCFIL (1: Enabled)					
		Bit 6, 7	Reserved (0: Disabled)					
		Bit 8	LT_REQ1 (1: Enabled)					
		Bit 9	LT_REQ2 (1: Enabled)					
		Bit 10, 11	LT_SEL1 (1: Enabled)					
		Bit 12, 13	LT_SEL2 (1: Enabled)					
		Bit 14, 15	Reserved (0: Disabled)					
		Bit 16 to 19	SEL_MON1 (1: Enabled)					
		Bit 20 to 23	SEL_MON2 (1: Enabled)					
		Bit 24 to 27	SEL_MON3 (1: Enabled)					
		Bit 28 to 31	Reserved (0: Disabled)					

(cont'd)

Parameter No.	Size	Name		Setting Range	Units [Resolution]	Factory Setting	When Enabled	Classification
91 PnB22	4	Servo Command Status Field Enabled/Disabled (read only)		–	0	0FFF3F33H	–	Command Related Parameters
		Bit 0	CMD_PAUSE_CMP (1: Enabled)					
		Bit 1	CMD_CANCEL_CMP (1: Enabled)					
		Bit 2, 3	Reserved (0: Disabled)					
		Bit 4, 5	ACCFIL (1: Enabled)					
		Bit 6, 7	Reserved (0: Disabled)					
		Bit 8	L_CMP1 (1: Enabled)					
		Bit 9	L_CMP2 (1: Enabled)					
		Bit 10	POS_RDY (1: Enabled)					
		Bit 11	PON (1: Enabled)					
		Bit 12	M_RDY (1: Enabled)					
		Bit 13	SV_ON (1: Enabled)					
		Bit 14, 15	Reserved (0: Disabled)					
		Bit 16 to 19	SEL_MON1 (1: Enabled)					
		Bit 20 to 23	SEL_MON2 (1: Enabled)					
		Bit 24 to 27	SEL_MON3 (1: Enabled)					
		Bit 28 to 31	Reserved (0: Disabled)					
92 PnB24	4	I/O Bit Enabled/Disabled (Output) (read only)		–	–	007F01F0H	–	
		Bit 0 to 3	Reserved (0: Disabled)					
		Bit 4	V_PPI (1: Enabled)					
		Bit 5	P_PPI (1: Enabled)					
		Bit 6	P_CL (1: Enabled)					
		Bit 7	N_CL (1: Enabled)					
		Bit 8	G_SEL (1: Enabled)					
		Bit 9 to 11	G_SEL (0: Disabled)					
		Bit 12 to 15	Reserved (0: Disabled)					
		Bit 16 to 19	BANK_SEL (1: Enabled)					
		Bit 20 to 22	SO1 to SO3 (1: Enabled)					
		Bit 23	Reserved (0: Disabled)					
		Bit 24 to 31	Reserved (0: Disabled)					

(cont'd)

Parameter No.	Size	Name		Setting Range	Units [Resolution]	Factory Setting	When Enabled	Classification
93 PnB26	4	I/O Bit Enabled/Disabled (Input) (read only)		–	–	FF0FFEFEH	–	Command Related Parameters
		Bit 0	Reserved (0: Disabled)					
		Bit 1	DEC (1: Enabled)					
		Bit 2	P-OT (1: Enabled)					
		Bit 3	N-OT (1: Enabled)					
		Bit 4	EXT1 (1: Enabled)					
		Bit 5	EXT2 (1: Enabled)					
		Bit 6	EXT3 (1: Enabled)					
		Bit 7	ESTP (1: Enabled)					
		Bit 8	Reserved (0: Disabled)					
		Bit 9	BRK_ON (1: Enabled)					
		Bit 10	P-SOT (1: Enabled)					
		Bit 11	N-SOT (1: Enabled)					
		Bit 12	DEN (1: Enabled)					
		Bit 13	NEAR (1: Enabled)					
		Bit 14	PSET (1: Enabled)					
		Bit 15	ZPOINT (1: Enabled)					
		Bit 16	T_LIM (1: Enabled)					
		Bit 17	V_LIM (1: Enabled)					
		Bit 18	V_CMP (1: Enabled)					
		Bit 19	ZSPD (1: Enabled)					
		Bit 20 to 23	Reserved (0: Disabled)					
		Bit 24 to 31	I0_STS1 to 8 (1: Enabled)					

10.2 Parameter Recording Table

Use the following table for recording parameters.

Note: Pn10B, Pn170, and Pn408 have two kinds of digits: the digit which does not need the restart after changing the set- tings and the digit which needs the restart. The underlined digits of the factory setting in the following table show the digit which needs the restart.

Parameter	Factory Setting						Name	When Enabled
Pn000	0000						Basic Function Select Switch 0	After restart
Pn001	0000						Application Function Select Switch 1	After restart
Pn002	0011						Application Function Select Switch 2	After restart
Pn006	0002						Application Function Select Switch 6	Immediately
Pn007	0000						Application Function Select Switch 7	Immediately
Pn008	4000						Application Function Select Switch 8	After restart
Pn009	0010						Application Function Select Switch 9	After restart
Pn00B	0000						Application Function Select Switch B	After restart
Pn00C	0000						Application Function Select Switch C	After restart
Pn00D	0000						Application Function Select Switch D	After restart
Pn081	0000						Maker setting	-
Pn100	400						Speed Loop Gain	Immediately
Pn101	2000						Speed Loop Integral Time Constant	Immediately
Pn102	400						Position Loop Gain	Immediately
Pn103	100						Moment of Inertia Ratio	Immediately
Pn104	400						2nd Speed Loop Gain	Immediately
Pn105	2000						2nd Speed Loop Integral Time Constant	Immediately
Pn106	400						2nd Position Loop Gain	Immediately
Pn109	0						Feedforward Gain	Immediately
Pn10A	0						Feedforward Filter Time Constant	Immediately
Pn10B	<u>000</u>0						Application Function for Gain Select Switch	–
Pn10C	200						Mode Switch (torque reference)	Immediately
Pn10D	0						Mode Switch (speed reference)	Immediately
Pn10E	0						Mode Switch (acceleration)	Immediately
Pn10F	0						Mode Switch (position error)	Immediately
Pn11F	0						Position Integral Time Constant	Immediately
Pn121	100						Friction Compensation Gain	Immediately
Pn122	100						2nd Gain for Friction Compensation	Immediately
Pn123	0						Friction Compensation Coefficient	Immediately
Pn124	0						Friction Compensation Frequency Correction	Immediately
Pn125	100						Friction Compensation Gain Correction	Immediately
Pn131	0						Gain Switching Time 1	Immediately
Pn132	0						Gain Switching Time 2	Immediately
Pn135	0						Gain Switching Waiting Time 1	Immediately
Pn136	0						Gain Switching Waiting Time 2	Immediately

(cont'd)

Parameter	Factory Setting						Name	When Enabled
Pn139	0000						Automatic Gain Changeover Related Switch 1	Immediately
Pn13D	2000						Current Gain Level	Immediately
Pn140	0100						Model Following Control Related Switch	Immediately
Pn141	500						Model Following Control Gain	Immediately
Pn142	1000						Model Following Control Gain Compensation	Immediately
Pn143	1000						Model Following Control Bias (Forward Direction)	Immediately
Pn144	1000						Model Following Control Bias (Reverse Direction)	Immediately
Pn145	500						Vibration Suppression 1 Frequency A	Immediately
Pn146	700						Vibration Suppression 1 Frequency B	Immediately
Pn147	1000						Model Following Control Speed Feedforward Compensation	Immediately
Pn148	500						2nd Model Following Control Gain	Immediately
Pn149	1000						2nd Model Following Control Gain Compensation	Immediately
Pn14A	800						Vibration Suppression 2 Frequency	Immediately
Pn14B	100						Vibration Suppression 2 Compensation	Immediately
Pn14F	0011						Control Related Switch	After restart
Pn160	0010						Anti-Resonance Control Related Switch	Immediately
Pn161	1000						Anti-Resonance Frequency	Immediately
Pn162	100						Anti-Resonance Gain Compensation	Immediately
Pn163	0						Anti-Resonance Damping Gain	Immediately
Pn164	0						Anti-Resonance Filter Time Constant 1 Compensation	Immediately
Pn165	0						Anti-Resonance Filter Time Constant 2 Compensation	Immediately
Pn170	1401						Tuning-less Function Related Switch	–
Pn205	65535						Multiturn Limit Setting	After restart
Pn207	0010						Position Control Function Switch	After restart
Pn20A	32768						Maker setting	-
Pn20E	1						Electronic Gear Ratio (Numerator)	After restart
Pn210	1						Electronic Gear Ratio (Denominator)	After restart
Pn212	2048						Encoder Output Pulses	After restart
Pn22A	0000						Maker setting	-
Pn230	0000						Position Control Expanded Function Switch	After reset
Pn231	0						Backlash Compensation Value	Immediately
Pn233	0						Backlash Compensation Time Constant	Immediately
Pn281	20						Maker setting	-
Pn304	500						JOG Speed	Immediately
Pn305	0						Soft Start Acceleration Time	Immediately

(cont'd)

Parameter	Factory Setting						Name	When Enabled
Pn306	0						Soft Start Deceleration Time	Immediately
Pn310	0000						Vibration Detection Switch	Immediately
Pn311	100						Vibration Detection Sensibility	Immediately
Pn312	50						Vibration Detection Level	Immediately
Pn324	300						Moment of Inertia Calculating Start Level	Immediately
Pn401	100						Torque Reference Filter Time Constant	Immediately
Pn402	800						Forward Torque Limit	Immediately
Pn403	800						Reverse Torque Limit	Immediately
Pn404	100						Forward External Torque Limit	Immediately
Pn405	100						Reverse External Torque Limit	Immediately
Pn406	800						Emergency Stop Torque	Immediately
Pn407	10000						Speed Limit during Torque Control	Immediately
Pn408	0000						Torque Related Function Switch	–
Pn409	5000						1st Notch Filter Frequency	Immediately
Pn40A	70						1st Notch Filter Q Value	Immediately
Pn40B	0						1st Notch Filter Depth	Immediately
Pn40C	5000						2nd Notch Filter Frequency	Immediately
Pn40D	70						2nd Notch Filter Q Value	Immediately
Pn40E	0						2nd Notch Filter Depth	Immediately
Pn40F	5000						2nd Step 2nd Torque Reference Filter Frequency	Immediately
Pn410	50						2nd Step 2nd Torque Reference Filter Q Value	Immediately
Pn412	100						1st Step 2nd Torque Reference Filter Time Constant	Immediately
Pn415	0						Reserved	–
Pn423	0000						Reserved	–
Pn424	50						Torque Limit at Main Circuit Voltage Drop	Immediately
Pn425	100						Release Time for Torque Limit at Main Circuit Voltage Drop	Immediately
Pn456	15						Sweep Torque Reference Amplitude	Immediately
Pn460	0101						Notch Filter Adjustment Switch	Immediately
Pn501	10						Zero Clamp Level	Immediately
Pn502	20						Rotation Detection Level	Immediately
Pn503	10						Speed Coincidence Signal Output Width	Immediately
Pn506	0						Lock Reference - Servo OFF Delay Time	Immediately
Pn507	100						Lock Reference Output Speed Level	Immediately
Pn508	50						Waiting Time for Lock Signal When Motor Running	Immediately
Pn509	20						Instantaneous Power Cut Hold Time	Immediately
Pn50A	1881						Input Signal Selection 1	After restart
Pn50B	8882						Input Signal Selection 2	After restart
Pn50E	0000						Output Signal Selection 1	After restart

(cont'd)

Parameter	Factory Setting						Name	When Enabled
Pn50F	0100						Output Signal Selection 2	After restart
Pn510	0000						Output Signal Selection 3	After restart
Pn511	6543						Input Signal Selection 5	After restart
Pn512	0000						Output Signal Inverse Setting	After restart
Pn517	0000						Reserved	–
Pn51B	1000						Excessive Error Level Between Servomotor and Load Positions	Immediately
Pn51E	100						Excessive Position Error Warning Level	Immediately
Pn520	5242880						Excessive Position Error Alarm Level	Immediately
Pn522	7						Positioning Completed Width	Immediately
Pn524	1073741824						NEAR Signal Width	Immediately
Pn526	5242880						Excessive Position Error Alarm Level at Servo ON	Immediately
Pn528	100						Excessive Position Error Warning Level at Servo ON	Immediately
Pn529	10000						Speed Limit Level at Servo ON	Immediately
Pn52A	20						Multiplier per One Fully-closed Rotation	Immediately
Pn52B	20						Overload Warning Level	Immediately
Pn52C	100						Derating of Base Current at Detecting Overload of Motor	After restart
Pn52D	50						Reserved	-
Pn52F	0FFF						Reserved	-
Pn530	0000						Program JOG Operation Related Switch	Immediately
Pn531	32768						Program JOG Movement Distance	Immediately
Pn533	500						Program JOG Movement Speed	Immediately
Pn534	100						Program JOG Acceleration/Deceleration Time	Immediately
Pn535	100						Program JOG Waiting Time	Immediately
Pn536	1						Number of Times of Program JOG Movement	Immediately
Pn550	0						Analog Monitor 1 Offset Voltage	Immediately
Pn551	0						Analog Monitor 2 Offset Voltage	Immediately
Pn552	100						Analog Monitor Magnification (·1)	Immediately
Pn553	100						Analog Monitor Magnification (·2)	Immediately
Pn560	400						Remained Vibration Detection Width	Immediately
Pn561	100						Overshoot Detection Level	Immediately
Pn600	0						Regenerative Resistor Capacity	Immediately
Pn601	0						Reserved	-
Pn800	1040						Communications Control	Immediately
Pn801	0003						Application Function Select 6 (Software LS)	Immediately
Pn803	10						Origin Range	Immediately
Pn804	1073741823						Forward Software Limit	Immediately
Pn806	-1073741823						Reverse Software Limit	Immediately

(cont'd)

Parameter	Factory Setting						Name	When Enabled
Pn808	0						Absolute Encoder Origin Offset	Immediately ∗1
Pn80A	100						1st Linear Acceleration Constant	Immediately ∗2
Pn80B	100						2nd Linear Acceleration Constant	Immediately ∗2
Pn80C	0						Acceleration Constant Switching Speed	Immediately ∗2
Pn80D	100						1st Linear Deceleration Constant	Immediately ∗2
Pn80E	100						2nd Linear Deceleration Constant	Immediately ∗2
Pn80F	0						Deceleration Constant Switching Speed	Immediately ∗2
Pn810	0						Exponential Function Acceleration/ Deceleration Bias	Immediately ∗2
Pn811	0						Exponential Function Acceleration/ Deceleration Time Constant	Immediately ∗2
Pn812	0						Movement Average Time	Immediately ∗2
Pn814	100						Final Travel Distance for External Positioning	Immediately ∗2
Pn816	0000						Homing Mode Setting	Immediately ∗2
Pn817	50						Homing Approach Speed (Homing Approach Speed 1)	Immediately ∗2
Pn818	5						Homing Creep Speed (Homing Approach Speed 2)	Immediately ∗2
Pn819	100						Final Travel Distance for Homing	Immediately∗2
Pn81E	0000						Input Signal Monitor Selection	Immediately
Pn81F	0010						Command Data Allocation	After restart
Pn820	0						Forward Latching Allowable Area	Immediately
Pn822	0						Reverse Latching Allowable Area	Immediately
Pn824	0000						Option Monitor 1 Selection	Immediately
Pn825	0000						Option Monitor 2 Selection	Immediately
Pn827	100						Linear Deceleration Constant 1 for Stopping	Immediately ∗2
Pn829	0						SVOFF Waiting Time (SVOFF at deceleration to stop)	Immediately
Pn82A	1813						Option Field Allocation 1	After restart
Pn82B	1D1C						Option Field Allocation 2	After restart
Pn82C	1F1E						Option Field Allocation 3	After restart
Pn82D	0000						Option Field Allocation 4	After restart
Pn82E	0000						Option Field Allocation 5	After restart
Pn833	0000						Motion Setting	After restart
Pn834	100						1st Linear Acceleration Constant 2	Immediately∗2

∗1. Enabled after the SENS_ON is entered.

∗2. Change the setting when the reference is stopped (DEN is set to 1), because the change will affect the output during operation.

(cont'd)

Parameter	Factory Setting						Name	When Enabled
Pn836	100						2nd Linear Acceleration Constant 2	Immediately∗2
Pn838	0						Acceleration Constant Switching Speed 2	Immediately ∗2
Pn83A	100						1st Linear Deceleration Constant 2	Immediately∗2
Pn83C	100						2nd Linear Deceleration Constant 2	Immediately∗2
Pn83E	0						Deceleration Constant Switching Speed 2	Immediately ∗2
Pn840	100						Linear Deceleration Constant 2 for Stopping	Immediately ∗2
Pn842	0						Homing Approach Speed (Homing Approach Speed12)	Immediately ∗2
Pn844	0						Homing CreepSpeed (Homing Approach Speed 22)	Immediately ∗2
Pn850	0						Latch Sequence Number	Immediately
Pn851	0						Continuous Latch Count	Immediately
Pn852	0000						Latch Sequence Signal 1 to 4 Setting	Immediately
Pn853	0000						Latch Sequence Signal 5 to 8 Setting	Immediately
Pn860	0000						SVCMD_IO (input signal monitor) Allocation 1	Immediately
Pn861	0000						SVCMD_IO (input signal monitor) Allocation 2	Immediately
Pn862	0000						SVCMD_IO (input signal monitor) Allocation 3	Immediately
Pn863	0000						SVCMD_IO (input signal monitor) Allocation 4	Immediately
Pn864	0000						SVCMD_IO (input signal monitor) Allocation 5	Immediately
Pn865	0000						SVCMD_IO (input signal monitor) Allocation 6	Immediately
Pn866	0000						SVCMD_IO (input signal monitor) Allocation 7	Immediately
Pn868	0000						SVCMD_IO (output signal monitor) Allocation 1	Immediately
Pn869	0100						SVCMD_IO (output signal monitor) Allocation 2	Immediately
Pn880	0						Station Address Monitor (for maintenance, read only)	Immediately
Pn881	0						Setting Transmission Byte Monitor [byte] (for maintenance, read only)	Immediately
Pn882	0						Transmission Cycle Setting Monitor [0.25 μs] (for maintenance, read only)	Immediately
Pn883	0						Communications Cycle Setting Monitor [x transmission cycle] (for maintenance, read only)	Immediately
Pn88A	0						MECHATROLINK Receive Error Counter Monitor (for maintenance, read only)	Immediately

∗2. Change the setting when the reference is stopped (DEN is set to 1), because the change will affect the output during operation.

(cont'd)

Parameter	Factory Setting						Name	When Enabled
Pn890 to Pn8A6	0						Command Data Monitor at Alarm/ Warning Occurs (for maintenance, read only)	Immediately
Pn8A8 to Pn8BE	0						Response Data Monitor at Alarm/ Warning Occurs (for maintenance, read only)	Immediately
Pn900	0						Parameter Bank Number	After restart
Pn901	0						Parameter Bank Member Number	After restart
Pn902 to Pn910	0						Parameter Bank Member Definition	After restart
Pn920 to Pn95F	0						Parameter Bank Data (nonvolatile memory save disabled)	Immediately
01 PnA02	–						Encoder Type (read only)	–
02 PnA04	–						Motor Type (read only)	–
03 PnA06	–						Semi-closed/Fully-closed Type (read only	–
04 PnA08	–						Rated Speed (read only)	–
05 PnA0A	–						Maximum Output Speed (read only)	–
06 PnA0C	–						Speed Multiplier (read only)	–
07 PnA0E	–						Rated Torque (read only)	–
08 PnA10	–						Maximum Output Torque (read only)	–
09 PnA12	–						Torque Multiplier (read only)	–
0A PnA14	–						Resolution (read only)	–
21 PnA42	1						Electronic Gear Ratio (Numerator)	After restart
22 PnA44	1						Electronic Gear Ratio (Denominator)	After restart
23 PnA46	0						Absolute Encoder Origin Offset	Immediately*1
24 PnA48	65535						Multiturn Limit Setting	After restart
25 PnA4A	0000H						Limit Setting	After restart
26 PnA4C	1073741823						Forward Software Limit	Immediately
27 PnA4E	0						Reserved (Do not use.)	Immediately
28 PnA50	-1073741823						Reverse Software Limit	Immediately

*1. Available after the SENS_ON command is input.

Note: When using parameters that are enabled after restarting the DRIVER, a CONFIG command must be input or the power must be turned OFF and then ON again.

(cont'd)

Parameter	Factory Setting						Name	When Enabled
29 PnA52	0						Reserved (Do not use.)	Immediately
41 PnA82	0						Speed Unit	After restart
42 PnA84	0						Speed Base Unit	After restart
43 PnA86	0						Position Unit	After restart
44 PnA88	0						Position Base Unit	After restart
45 PnA8A	0						Acceleration Unit	After restart
46 PnA8C	4						Acceleration Base Unit	After restart
47 PnA8E	1						Torque Unit	After restart
48 PnA90	0						Torque Base Unit	After restart
49 PnA92	0601011FH						Compliance Unit System (read only)	–
61 PnAC2	40000						Speed Loop Gain	Immediately
62 PnAC4	20000						Speed Loop Integral Time Constant	Immediately
63 PnAC6	40000						Position Loop Gain	Immediately
64 PnAC8	0						Feedforward Compensation	Immediately
65 PnACA	0						Position Loop Integral Time Constant	Immediately
66 PnACC	7						Positioning Completed Width	Immediately
67 PnACE	1073741824						NEAR Signal Width	Immediately
81 PnB02	0						Exponential Function Accel/Decel Time Constant	Immediately*2
82 PnB04	0						Movement Average Time	Immediately*2
83 PnB06	100						Final Travel Distance for External Positioning	Immediately
84 PnB08	5000 Value converted reference/s into 10^{-3} min^{-1}						Homing Approach Speed	Immediately

*2. Change the setting when the reference is stopped (DEN is set to 1), because the change will affect the output during operation.

Note: When using parameters that are enabled after restarting the DRIVER, a CONFIG command must be input or the power must be turned OFF and then ON again.

(cont'd)

Parameter	Factory Setting						Name	When Enabled
85 PnB0A	500 Value converted reference/s into 10^{-3} min^{-1}						Homing Creep Speed	Immediately
86 PnB0C	100						Final Travel Distance for Homing	Immediately
87 PnB0E	1						Monitor Selection 1	Immediately
88 PnB10	0						Monitor Selection 2	Immediately
89 PnB12	0						Monitor Selection for SEL_MON1 (CMN1)	Immediately
8A PnB14	0						Monitor Selection for SEL_MON2 (CMN2)	Immediately
8B PnB16	10						Origin Detection Range	Immediately
8C PnB18	100						Forward Torque Limit	Immediately
8D PnB1A	100						Reverse Torque Limit	Immediately
8E PnB1C	20000						Zero Speed Detection Range	Immediately
8F PnB1E	10000						Speed Coincidence Signal Output Width (read only)	Immediately
90 PnB20	0FFF3F3FH						Servo Command Control Field Enabled/Disabled (read only)	–
91 PnB22	0FFF3F33H						Servo Command Status Field Enabled/Disabled (read only)	–
92 PnB24	007F01F0H						I/O Bit Enabled/Disabled (Output) (read only)	–
93 PnB26	FF0FFEFEH						I/O Bit Enabled/Disabled (Input) (read only)	–

Revision history
No.LEC-OM07101 Feb./2014 1st printing No.LEC-OM07102 Aug./2014 2nd printing Correction of words

SMC Corporation

4-14-1, Sotokanda, Chiyoda-ku, Tokyo 101-0021 JAPAN

Tel: + 81 3 5207 8249 Fax: +81 3 5298 5362

URL http://www.smcworld.com