No. DOC1080288
NN67563202

Operation Manual

PRODUCT NAME

Electric Stopper Cylinder / Controller-less

MODEL / Series / Product Number

LEBQ-X31 Series

SMC Corporation

Contents

1. Outline 3

1.1 Features 3
1.2 Procedure before operation 4

2. Product Specifications 5

2.1 How to Order 5
2.2 Specification 6
2.3 Dimensions 7
2.4 Construction 8

3. Electric Actuators Precautions 9

Wiring of cables / Common precautions 9
Electric actuators / Common precautions 11
Design and selection 11
Mounting 13
Handling 14
Operating environment 16
Maintenance 17
Actuator with Lock / Common precautions 18
Design and selection 19
Handling 19
Installation 21
Power Supply 21
Grounding 21
Wiring 22
Maintenance 22

4. Electric Stopper Cylinder /Specific Product Precautions 23

4.1 Design and selection 23
4.2 Mounting 23
4.3 Handling 25

5. Stopper Cylinder Precautions 25

5.1 Design and selection 25
5.2 Mounting 25
5.3 Handling 26
5.4 Maintenance 27

5. Troubleshooting 29

Electric Actuator / Stopper Type Safety Instructions

These safety instructions are intended to prevent hazardous situations and/or equipment damage. These instructions indicate the level of potential hazard with the labels of **"Caution," "Warning"** or **"Danger."** They are all important notes for safety and must be followed in addition to International Standards (ISO/IEC)*1), and other safety regulations.

*1) ISO 4414: Pneumatic fluid power - General rules and safety requirements for systems and their components
ISO 4413: Hydraulic fluid power - General rules and safety requirements for systems and their components
IEC 60204-1: Safety of machinery - Electrical equipment of machines - Part 1: General requirements
ISO 10218-1: Robots and robotic devices - Safety requirements for industrial robots - Part 1:Robots
etc.

Danger	**Danger** indicates a hazard with a high level of risk which, if not avoided, will result in death or serious injury.
Warning	**Warning** indicates a hazard with a medium level of risk which, if not avoided, could result in death or serious injury.
Caution	**Caution** indicates a hazard with a low level of risk which, if not avoided, could result in minor or moderate injury.

Warning

1. The compatibility of the product is the responsibility of the person who designs the equipment or decides its specifications.
Since the product specified here is used under various operating conditions, its compatibility with specific equipment must be decided by the person who designs the equipment or decides its specifications based on necessary analysis and test results. The expected performance and safety assurance of the equipment will be the responsibility of the person who has determined its compatibility with the product. This person should also continuously review all specifications of the product referring to its latest catalog information, with a view to giving due consideration to any possibility of equipment failure when configuring the equipment.

2. Only personnel with appropriate training should operate machinery and equipment.
The product specified here may become unsafe if handled incorrectly. The assembly, operation and maintenance of machines or equipment including our products must be performed by an operator who is appropriately trained and experienced.

3. Do not service or attempt to remove product and machinery/equipment until safety is confirmed.
1. The inspection and maintenance of machinery/equipment should only be performed after measures to prevent falling or runaway of the driven objects have been confirmed.
2. When the product is to be removed, confirm that the safety measures as mentioned above are implemented and the power from any appropriate source is cut, and read and understand the specific product precautions of all relevant products carefully.
3. Before machinery/equipment is restarted, take measures to prevent unexpected operation and malfunction.

4. SMC products cannot be used beyond their specifications. They are not developed, designed, and manufactured to be used under the following conditions or environments. Use under such conditions or environments is not allowed.
1. Conditions and environments outside of the given specifications, or use outdoors or in a place exposed to direct sunlight.
2. Use for nuclear power, railways, aviation, space equipment, ships, vehicles, military application, equipment affecting human life, body, and property, combustion equipment, entertainment equipment, emergency shut-off circuits, press clutches, brake circuits, safety equipment, etc., and use for applications that do not conform to standard specifications such as catalogs and operation manuals.
3. Use for interlock circuits, except for use with double interlock such as installing a mechanical protection function in case of failure. Please periodically inspect the product to confirm that the product is operating properly.

Electric Actuator / Stopper Type Safety Instructions

⚠ Caution

SMC develops, designs, and manufactures products to be used for automatic control equipment, and provides them for peaceful use in manufacturing industries.
Use in non-manufacturing industries is not allowed.
Products SMC manufactures and sells cannot be used for the purpose of transactions or certification specified in the Measurement Act of each country.
The new Measurement Act prohibits use of any unit other than SI units in Japan.

Limited warranty and Disclaimer/Compliance Requirements

The product used is subject to the following “Limited warranty and Disclaimer” and “Compliance Requirements”. Read and accept them before using the product.

Limited warranty and Disclaimer

1. The warranty period of the product is 1 year in service or 1.5 years after the product is delivered, whichever is first.*2)
   Also, the product may have specified durability, running distance or replacement parts. Please consult your nearest sales branch.
2. For any failure or damage reported within the warranty period which is clearly our responsibility, a replacement product or necessary parts will be provided.
   This limited warranty applies only to our product independently, and not to any other damage incurred due to the failure of the product.
3. Prior to using SMC products, please read and understand the warranty terms and disclaimers noted in the specified catalog for the particular products.

***2) Vacuum pads are excluded from this 1 year warranty.**
A vacuum pad is a consumable part, so it is warranted for a year after it is delivered.
Also, even within the warranty period, the wear of a product due to the use of the vacuum pad or failure due to the deterioration of rubber material are not covered by the limited warranty

Compliance Requirements

1. The use of SMC products with production equipment for the manufacture of weapons of mass destruction (WMD) or any other weapon is strictly prohibited.
2. The exports of SMC products or technology from one country to another are governed by the relevant security laws and regulations of the countries involved in the transaction. Prior to the shipment of a SMC product to another country, assure that all local rules governing that export are known and followed.

1. Outline

1.1 Features

This electric stopper cylinder can be used as a stopper in a transfer line with no air source.

- Controller is not required

  - This product controls ON/OFF operation at 24 VDC with no controller.

    =>Minimizes installation space. Allows easy startup and wiring.

- With power applied, the lower stroke end is continuously energized, supplying holding force for the cylinder.

  - The lower stroke end is held by the retention force of the solenoid only.

    Lower stroke end holding power: 4.8W (□ Starting power: 48W)

  - When the power supply is off, the upper stroke end is held by the spring force only.

Working principle

	Holding raised-end ①	Start descending ②	Holding lowered-end ③	Start rising ④
Power consumption [W] 48		48 W		
Power consumption [W] 4.8	Zero		4.8 W	Zero
Power supply	OFF	ON	ON	OFF
Motor	OFF	ON	OFF	OFF
Solenoid	OFF	ON	ON	OFF

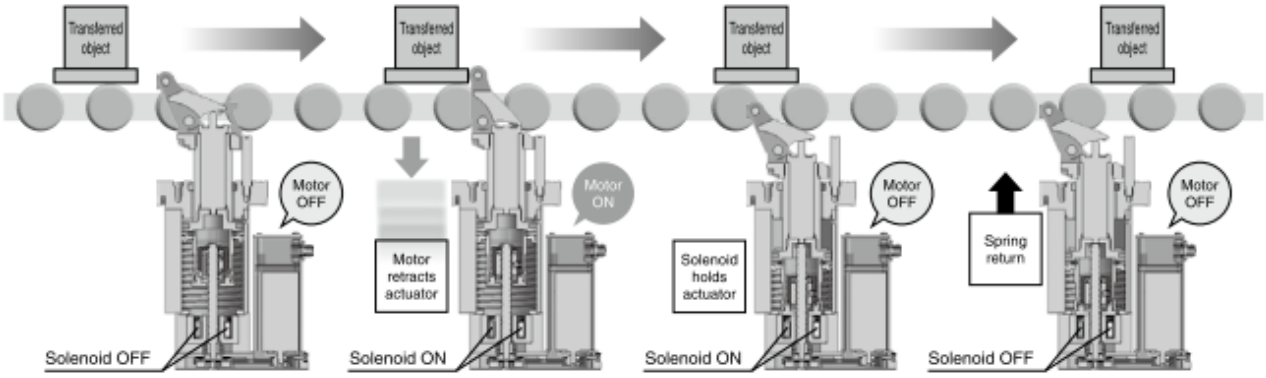

Operation: When power is OFF (de-energized), raised-end is held with spring force only (1). When power is ON (energized), the roller starts to descend powered by the motor and by the coil (2). After the roller reaches the retracted end, the motor stops automatically (Motor OFF) and it is held by the solenoid force only (3). When power is OFF, it starts to rise with spring force (4).

- Interchangeable mounting with an air cylinder (Stopper Cylinder / RSQ40 Series)

1.2 Procedure before operation

If you are using this product for the first time, please refer to the following wiring and operation procedures.

- **Actuator wiring**
  Actuator wiring, please to M12 plug connector (A code).

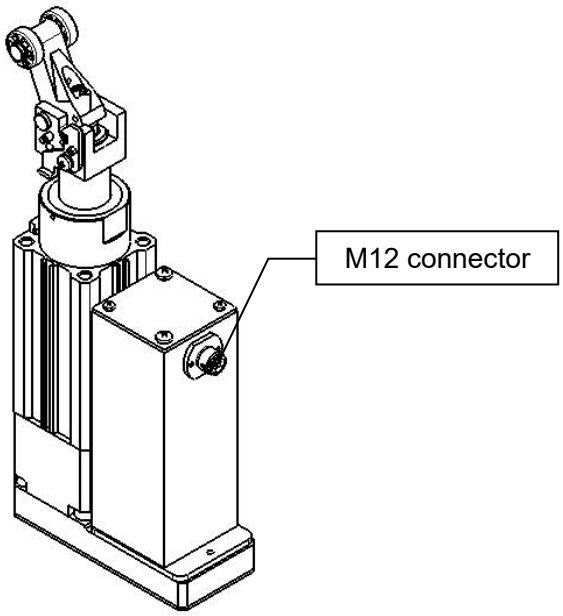

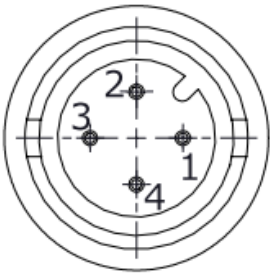

Connector specification

Pin No.	Name	Function
1	—	Not used
2	—	
3	0V	Operation power supply
4	24VDC	

Wiring of M12 connector

⚠ Caution
Please order EX500-AP□□□-□ separately if a cable with M12 socket connector manufactured by SMC is used.

2. Product Specifications

2.1 How to Order

How to order is shown below.

LEBQ	40	E	K	-	20	T	M	D	-	X31
	(1)	(2)	(3)		(4)	(5)	(6)	(7)		

(1) Size

40

(3)Lead

K	Basic type

(4) Stroke[mm]

20	20

(5) Action

T	Single acting / spring extend

(6) Roller material

Nil	Resin
M	Carbon steel

(2) Lever direction

E	Opposite side of motor 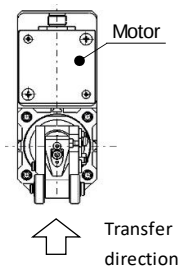 	L	Motor left side 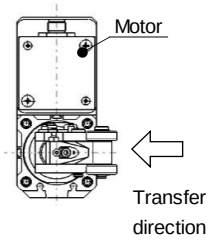
R	Motor right side 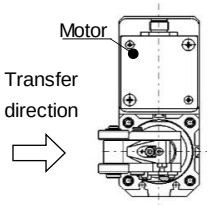 	M	Motor side 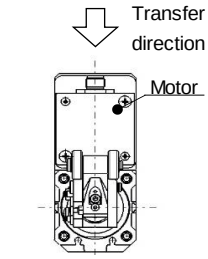

(7) Rod end configuration

B	Lever with built-in shock absorber (energy absorbing adjustable)	None
C		With cancel cap
D		With lock mechanism
E		With lock + cancel cap

2.2 Specification

The basic specifications of this product are shown below.

Actuator specifications	Stroke [mm]	20
	Mounting orientation*3	Vertical (extending direction: top)
	Rising (extending operation) time [sec]*8	1 or less
	Descending (retracting operation) [sec]*8	1 or less (No lateral load)
	Action*1	Single acting/spring extend
	Rod end configuration	Lever with built-in shock absorber
	Actuation type	Ball screw + Belt
	Operating frequency [c.p.m]	3 or less
	Operating temperature range [°C]	5 to 40
	Operating humidity range [%RH]	90 or less (No freezing)
	Product weight [kg]	2.6 (Without option)

Electric specifications	Motor size	⌀38
	Motor type	DC motor
	Rated voltage [V]	24 VDC ±10%
	Power consumption [W]	48
	Lower end standby power [W]*2	4.8

*1 This actuator holds the raised-end when de-energized. (Spring return)
*2 This actuator holds the lowered-end with solenoid only when deenergized.
*3 This actuator can be used in vertical directions only.
*4 The motor will be turned OFF automatically by the internal circuit board after the actuator stops. A dedicated controller or driver is not necessary.
*5 The applicable auto switch is the D-M9m series.(Please refer to the Web Catalog for details.)
*6 A short break function is included with this cylinder for protection.
* Short break function: a function that slows the driving motor down if the rotation speed is over the designated value.
*7 Beware of inrush current of approx. 5 A when the power supply is turned on. Choose the equipment used when the power supply is turned such as relay considering the inrush current.
*8 Operation time is a value for 20℃.

Dimensions
LEBQ40EK-20T□□-X31

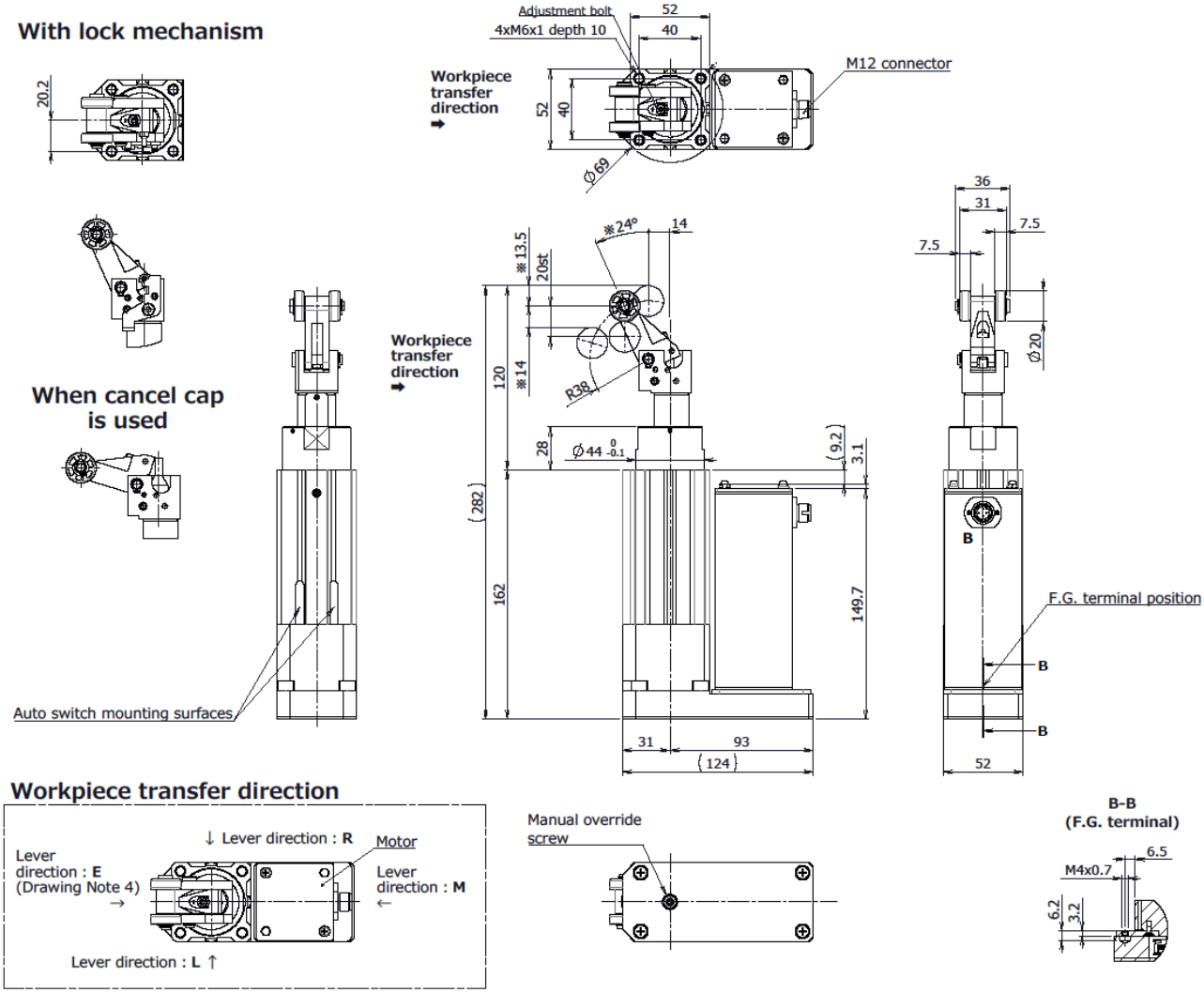

Note1) The lever direction of this drawing is opposite the motor side : E type.
Note2) The above drawing indicates the dimensions when the adjustment bolt is on the down end (when energy absorption is at its maximum)
Regarding the dimensions with * marking, the values changes as the adjustment bolt goes up.
*1 24°⇒16° *2 13.5⇒11.5 *3 14⇒16

2.4 Construction

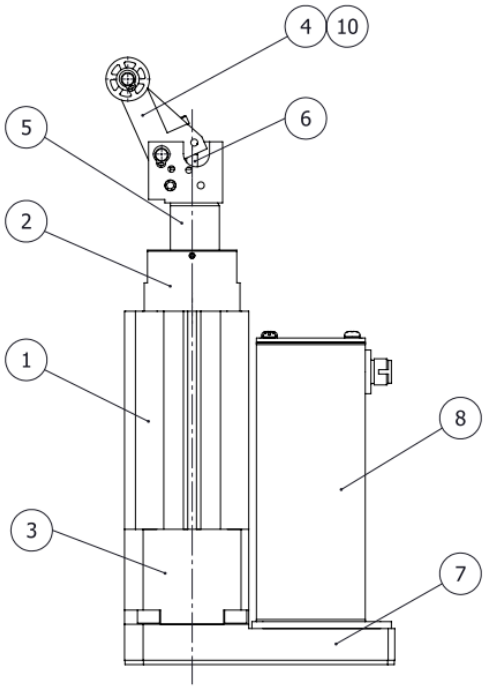

When cancel cap is used

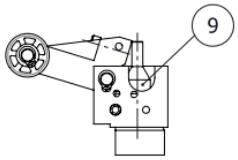

Component Parts

No.	Description	Material	Note
1	Cylinder tube	Aluminium alloy	Anodized
2	Rod cover assembly	-	
3	Housing	Aluminium alloy	Anodized
4	Lever assembly	-	
5	Piston rod	Carbon steel	Hard chrome plating
6	Shock absorber	-	
7	Return box	Aluminium alloy	Anodized
8	Motor assembly	-	
9	Cancel cap	-	
10	Lever holder assembly	-	

Replacement Parts/ Shock absorber

Order no.
RB1407-X552

3. Electric Actuators Precautions

Wiring of cables / Common precautions

⚠ **Warning**

1. **Adjustment, installation, inspection, or wiring changes should be conducted after the power supply to this product has been turned off.**
   Electrical shock, malfunction, or damage can result.
2. **Never disassemble the cable. Use only the specified cables.**
3. **Never connect or disconnect the cable or connector with the power on.**

⚠ **Caution**

1. **Wiring should be done correctly.**
   For each terminal, voltages other than those stipulated in the operation manual should not be applied.
2. **Connect the connector securely.**
   Check for correct connector wiring and polarity.
3. **Handling noise**
   If the noise is at the same wavelength as the signal lines, it will lead to malfunction.
   As a countermeasure, separate the high and low electrical lines, shorten the length of wiring, etc.
4. **Do not connect power or high-voltage cables in the same wiring path as the unit.**
   The product can malfunction due to noise and surge voltage interference in the signal line from power and high-voltage cables.Separate the wiring of the controller and its peripheral device from that of power and high-voltage cables.
5. **Be careful that cables are not caught by actuator movement.**
6. **Operate with cables such that they are not easily moved.**
   Avoid bending cables at sharp angles where they enter the product.
7. **Avoid twisting, folding, rotating, or applying external force to the cable.**
   Electric shock, wire breakage, contact failure, or a loss of product control may occur.
8. **Do not move cables connected to the actuator.**
   The motor and lock cables are not robotic cables and can be broken when moved. Therefore, secure the cables and the connectors (part “A” in the figure below) in place during set up.

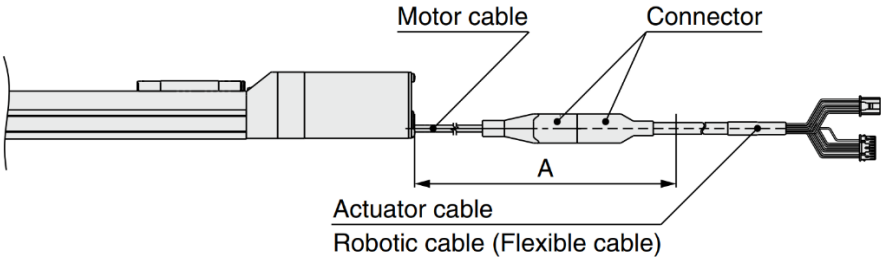

9. **Select a “robotic cable (flexible cable)” when repeated bending of the actuator cable is required. Also, do not put cables into a flexible moving tube with a radius smaller than the specified value (50 mm or longer).**
   Electric shock, wire breakage, contact failure, or a loss of product control may occur if “standard cables” are used for repeated bending.

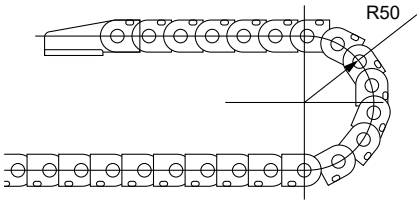

10. **Confirm wiring insulation.**
    Insulation failure (interference with other circuits, poor insulation between terminals, etc.) could introduce excessive voltage or current to the controller or its peripheral devices, causing damage to them.

11. **The speed and force may change depending on the cable length, load, and mounting conditions.**
    Furthermore, if the cable length exceeds 5 m, then it will decrease by up to 10% for every additional 5m. (At 15 m: Reduced by up to 20%)
12. **When checking the conductivity of the cable, be careful not to deform the connector's mating hole and terminals.**
    Inserting a non-compatible connector, tool, cylinder-shaped object, etc., into the connector's mating hole can cause the mating hole or terminals to become deformed, which may cause contact failure or disconnection.
13. **Refrain from plugging in and unplugging the connector frequently.**
    Doing so may result in contact failure or disconnection.

[Transportation]

⚠ **Caution**

1. **Do not carry or swing the product by the motor or cable**

Design and selection

⚠ **Warning**

1. **Be sure to read the operation manual (this manual and the one for the controller: LEC/JXC series).**
   Handling or usage/operation other than that specified in the operation manual may lead to breakage or operation failure of the product. Any damage attributed to use beyond the specifications is not covered by the warranty.
2. **There is a possibility of dangerous sudden action by the product if the sliding parts of the machinery are twisted due to external forces, etc.**
   In such cases, human injury may occur, such as by hands or feet getting caught in the machinery, or damage to the machinery itself may occur. Design the machinery so as to avoid such dangers.
3. **A protective cover is recommended to minimize the risk of personal injury.**
   If a driven object and the moving parts of the product are in close proximity, personal injury may occur. Design the system to avoid contact with the human body.
4. **Securely tighten all stationary parts and connected parts so that they will not become loose.**
   When the product operates with high frequency or is installed where there is a lot of vibration, ensure that all parts remain secure.
5. **Consider a possible loss of power source.**
   Take measures to prevent injury and equipment damage in the event of a power source failure.
6. **Consider emergency stops.**
   Design so that human injury and/or damage to machinery and equipment will not be caused when machinery is stopped by a safety device under abnormal conditions, such as a power outage or a manual emergency stop.
7. **Consider the whole system.**
   Design the system so that human injury or equipment damage will not occur upon the restart of operation of the whole system.
8. **Never disassemble the product or make any modifications, including additional machining.**
   Doing so may cause human injury and/or an accident.
   It may also cause the deterioration of the product's performance.
9. **Do not use the stop signals, the "EMG" of the controller and the stop switch on the teaching box, as the emergency stop of the system.**
   The stop signals, "EMG" of the controller and the stop switch on the teaching box, are for decelerating and stopping the actuator. Design the system with an emergency stop circuit which applies to the relevant safety standards separately.
10. **When using the product vertically for applications, it is necessary to install a built-in safety device.**
    The table may fall due to the weight of a workpiece. The safety device should not interfere with the normal operation of the machine.

⚠ **Caution**

1. **Operate within the limits of the maximum usable stoke.**
   The product will be damaged if it is used with a stroke which exceeds the maximum stroke.
   Refer to the specifications of the product.
2. **When the product repeatedly cycles with partial strokes, operate it at a full stroke at least once a day or every 1000 strokes.**
   Otherwise, lubrication may run out.
3. **Do not use the product in applications where excessive external force or impact force is applied to it.**
   The product can be damaged. The components, including the motor, are manufactured to precise tolerances. Even a slight deformation may cause a malfunction or seizure.
4. **During operation (positioning operation or pushing operation), it cannot be returned to the origin position.**
5. **Refer to the Auto Switches Precautions (pages 991 to 995) if an auto switch is to be built in and used.**
6. **Step motor (servo/24 VDC) and servo motor (24 VDC) specifications with the following model number are not compliant with UL Standards: "Controller/Driver type: Without controller/driver (Nil)."**
   Individual actuators are not certified as UL Standards compliant products.
7. **When UL standards compliance is required in order to use the LECP/A series, the electric actuator and controller/driver should be used with a UL1310 class 2 power supply.**
8. **Do not exceed the product specifications even if a work load is supported by external guides.**
   Although the actuator moment is reduced by external guides, the required transport ability (the relationship between the speed and the work load) is not reduced.

Mounting

⚠ **Warning**

1. **Keep the manual in a safe place for future reference.**
   The product should be mounted and operated only after thoroughly reading the operation manual and understanding its contents.
2. **Observe the tightening torque for screws.**
   Tighten the screws to the recommended torque for mounting the product.
3. **Do not make any alterations to this product.**
   Alterations made to this product may lead to a loss of durability or damage to the product, which can lead to human injury or damage to other equipment and machinery.
4. **When connecting, make sure the rod axis and the load, and the direction of the movement match.**
   Failure to do so may cause complications with the lead screw, such as wear or damage.
5. **When an external guide is used, connect the moving parts of the actuator and the load in such a way that there is no interference at any point within the stroke.**
   Do not scratch or dent the sliding parts of the product tube, piston rod, etc., by striking or grasping them with other objects. The components are manufactured to precise tolerances. Even a slight deformation may cause a malfunction or seizure.
6. **Prevent the seizure of rotating parts (pins, etc.) by applying grease.**
7. **Do not use the product until you confirm that the equipment can operate properly.**
   After mounting or repair, connect the power supply to the product and perform appropriate functional inspections to check it is mounted properly.
8. **When one side is fixed**
   When an actuator is operated at a high speed with one end fixed and the other free (basic, flange, or direct mount types), a bending moment may act on the actuator due to the vibration generated at the stroke end, which can damage the actuator. In such a case, install a mounting bracket to suppress the vibration of the actuator body, or reduce the speed so that the actuator does not vibrate. Also, use a mounting bracket when moving the actuator body or when a long stroke actuator is mounted horizontally and fixed at one end.
9. **Do not apply strong impact or an excessive moment while mounting the product or a workpiece.**
   If an external force over the allowable moment is applied, it may cause play in the guide or an increase in the sliding resistance.

10. **Maintenance space**
    Reserve sufficient space for maintenance.

Handling

⚠ Warning

1. **Do not touch the motor during operation.**
   The surface temperature of the motor can increase to approx. 80°C due to operating conditions. The temperature may also increase due to energization. As it may cause burns, do not touch the motor when in operation.
2. **If abnormal heating, smoking, fire, etc., occurs in the product, immediately shut off the power supply.**
3. **Stop operation at once if there are abnormal noises or vibrations.**
   Abnormal noises or vibrations may mean that the product is not properly mounted, and if allowed to continue in this state, damage to the equipment may occur.
4. **Never touch the rotating parts of the motor while in operation.**
5. **Before installing, adjusting, inspecting, or performing maintenance on the product, controller, and related equipment, be sure to shut off the power supply.**
   Then, lock it so that no one other than the person working can turn the power on, or implement measures such as a safety plug.
6. **In the case of an actuator that has a servo motor (24 VDC), the motor phase detection step is conducted by inputting the servo's on signal just after the controller power is turned on.**
   The motor phase detection step moves the table/rod the distance of the one screw-lead as the maximum.
   (The motor rotates in the reverse direction if the table/rod hits an obstacle such as the end stop damper.)
   Take the motor phase detection step into consideration when installing and operating this actuator.

⚠ Caution

1. **Keep the controller and the actuator combined as delivered for use.**
   The actuator's parameters are set at the time of shipment. If it is combined with a different set of parameters, failure can result.
2. **Conduct the following inspection before operation.**
   (a) Confirm that the power supply line and each signal line is not damaged.
   (b) Confirm that the power supply line and each signal line is not loosened.
   (c) Confirm that the electric actuator/cylinder/controller/driver is not mounted loosely.
   (d) Confirm that the electric actuator/cylinder/controller/driver is operating correctly.
   (e) Confirm the function of the emergency stop of the whole system.
3. **If several persons are to be working conjointly, determine the procedure, signs, measures against abnormality, and restarting measures in advance. Then, have someone else, supervise the work.**
4. **The product may operate at a speed different from the set speed depending on the load and resistance.**
   When selecting a product, check the catalog for instructions regarding selection and specifications.
5. **Do not apply a load, impact, or resistance in addition to the transferred load during the return to origin.**
   If the product is made to return to origin by pushing force, a displacement of the origin position may occur.
6. **Do not remove the name plate.**
7. **Operation tests should be done at a low speed. Start operation by predefined speed after confirming there are no problems.**
8. **Do not apply forces of impact, collision, or resistance to the moving parts of an actuator in operation.**
   Doing so will cause a decrease in product life, damage to the product, etc.

[Grounding]

⚠ **Warning**

1. **Be certain to ground the actuator.**
2. **Dedicated grounding should be used.**
   Grounding should be to a D-class ground. (Ground resistance of 100 Ω or less.)
3. **Grounding should be performed near the actuator to shorten the grounding distance.**
4. **The cross-sectional area of this wire shall be a minimum of 2 mm^2.**
5. **Avoid common grounding with other devices.**

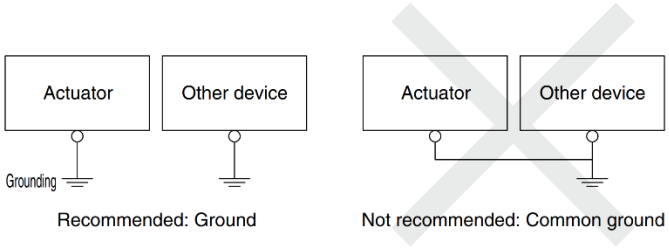

Recommended: Ground　　Not recommended: Common ground

[Unpackaging]

⚠ **Caution**

1. **Check that the received product is as ordered.**
   If a product different from the one ordered is installed, injury or damage can result.

Operating environment

⚠ **Warning**

1. **Avoid use in the following environments.**
   a. Areas with large amounts of dust or cutting chips that could enter the product
   b. Areas where the ambient temperature exceeds the specified range (Refer to the specifications.)
   c. Areas where the ambient humidity exceeds the specified range (Refer to the specifications.)
   d. Areas with corrosive gas, flammable gas, sea water, water, or steam that could adhere to the product
   e. Areas where strong magnetic or electric fields are generated
   f. Areas where direct vibration or impact shock is applied to the product
   g. Areas where there are large amounts of dust or there is exposure to water/oil droplets
   h. Areas that are exposed to direct sunlight (ultraviolet rays)
   i. Areas at altitudes of over 1000 m
   Heat radiation performance and withstand voltage may decline as a result.
   For details, consult withSMC.
2. **Do not use in an environment where the product is directly exposed to liquid, such as cutting oils.**
   If cutting oil, coolant, or oil mist adheres to the product, failure or increased sliding resistance can result.
3. **Install a protective cover when the product is used in an environment directly exposed to foreign matters, such as dust, cutting chips, and spatter.**
   Looseness or increased sliding resistance can result.
4. **Shade the product from direct sunlight.**
5. **In locations near heat sources, block them off.**
   When there is a heat source surrounding the product, the radiated heat from the heat source can increase the temperature of the product beyond the operating temperature range. Protect it with a cover, etc.
6. **Levels of the base oil of grease may decrease due to the external environment and operating conditions, causing a decline in lubrication performance and a shortened life of the product.**

[Storage]

⚠ **Warning**

1. **Do not store the product in a place in direct contact with rain or water drops or where it is exposed to harmful gas or liquid.**
2. **Store in an area that is shaded from direct sunlight and has a temperature and humidity within the specified range (–10°C to 60°C and 35 to 85% no condensation or freezing).**
3. **Do not apply vibration or impact to the product during storage.**

⚠ **Warning**

1. **Do not disassemble or repair the product.**
   Fire or electric shock can result. Contact SMC if the disassembly of the product is required for maintenance.
2. **Before modifying or checking the wiring, the voltage should be checked with a tester 5 minutes after the power supply has been turned off.**
   Failure to do so may result in electrical shock.

⚠ **Caution**

1. **Perform maintenance and inspection according to the procedures indicated in the operation manual.**
   Improper handling can cause an injury, damage, or the malfunction of equipment and machinery.
2. **Removal of equipment**
   Before equipment is removed, first confirm that measures are in place to prevent the dropping or runaway of driven objects, etc. Proceed only after cutting off the electric power. When starting up again, proceed with caution after confirming that conditions are safe.
3. **Be sure to cut the power to the controller and disconnect the electric actuator cable before moving the electric actuator slider manually by hand.**
   If the slider is moved with the electric actuator and controller still connected, the induced voltage of the motor will go to the controller, making it difficult to move the electric actuator smoothly. Moreover, frequently moving the electric actuator slider may result in controller damage or malfunction due to the induced voltage.

[Lubrication]

⚠ **Caution**

1. **The product has been lubricated for life by the manufacturer and does not require any further lubrication.**
   When lubrication is applied, special grease must be used. Please read the maintenance manual of each actuator.

Actuator with Lock / Common precautions

⚠ **Warning**

1. **Do not use the lock as a safety brake or as a control that requires a locking force.**
   The lock used for the product with lock is designed to prevent the dropping of workpieces.
2. **For vertical mounting, use the product with lock.**
   If the product is not equipped with a lock, the product will move and drop the workpiece when the power is removed. Please ensure that your safe equipment designs include measures to prevent the falling of workpieces.
3. **"Drop prevention" is a safety precaution that prevents a workpiece from dropping due to its weight when the product operation is stopped and the power supply is turned off.**
4. **Do not apply an impact load or strong vibration while the lock is activated.**
   If an external impact load or strong vibration is applied to the product, the lock will lose its holding force and damage to the sliding parts of the lock or a reduced service life may result. The same adverse effects may also occur when the lock slips due to a force exceeding the holding force, as this accelerates the wear of the lock.
5. **Do not apply liquid, oil, or grease to the lock or the area surrounding it.**
   When liquid, oil, or grease are adhered to the sliding parts of the lock, its holding force will reduce significantly. Any changes in lock sliding performance and condition may cause a lock release malfunction.
6. **Take measures against drops and check that safety is assured before the mounting, adjustment, and inspection of the product.**
   If the lock is released with the product mounted vertically, a work- piece can drop due to its weight.
7. **When the actuator is operated manually (when the SVRE output signal is off), supply 24 VDC to the [BK RLS] terminal of the power supply connector.**
   If the product is operated without releasing the lock, the wearing of the lock sliding surface will be accelerated, causing a reduction in the holding force and the life of the locking mechanism.
8. **Do not supply 24 VDC power supply continuously to the [BK RLS (Lock release)] terminal.**
   Stop supplying 24 VDC power supply to the [BK RLS (Lock release) terminal during normal operation. If power is supplied to the [BK RLS] terminal continuously, the lock will be released, and workpieces may be dropped when the stop signal (EMG) is received.
9. **The actuator may unable to unlock when the sliding part for locking reaches its life due to the rotation sliding of the shoe during operation. When the lock mechanism reaches its life, please contact SMC sales office for the replacement parts.**
   The sliding part for locking may make noise during operation, but this is normal.

Controller (Including Driver) and Peripheral Devices / Common precautions

Design and selection

⚠ **Warning**

1. **Be sure to apply the specified voltage.**
   Otherwise, malfunction or breakage may occur. If the applied voltage is lower than the specified voltage, it is possible that the load will not be able to be moved due to an internal voltage drop of the controller. Please check the operating voltage before use.
2. **Do not operate the product beyond the specifications.**
   Otherwise, a fire, malfunction, or actuator damage may result. Please check the specifications before use.
3. **Install an emergency stop circuit.**
   Please install an emergency stop outside of the enclosure so that the system operation can be stopped immediately and the power supply can be intercepted.
4. **In order to prevent any damage caused by the breakdown or malfunction of the controller and its peripheral devices, a backup system should be established in advance by giving a multiple-layered structure or a fail-safe design to the equipment, etc.**
5. **If a danger of human injury is expected due to abnormal heat generation, smoking, ignition, etc., of the controller and its peripheral devices, cut off the power supply of the product and the system immediately.**

⚠ **Caution**

1. **Use an actuator <u>with the lock</u> option if the actuator <u>will</u> <u>not be mounted horizontally</u> for use.**
   Burnout of the internal parts of the controller may occur. If the actuator is not equipped with a lock, it will move and drop the workpiece when the power and servo are turned OFF.

Handling

⚠ **Warning**

1. **Do not touch the inside of the controller and its peripheral devices.**
   Doing so may cause an electric shock or damage to the controller.
2. **Do not perform the operation or setting of the product with wet hands**Doing so may cause an electric shock.
3. **Products with damage or those missing any components should not be used.**
   An electric shock, fire, or injury may result.
4. **Use only the specified combination between the electric actuator and controller.**
   Failure to do so may cause damage to the actuator or the controller.
5. **Be careful not to be hit by workpieces while the actuator is moving.**
   It may cause an injury.
6. **Do not connect the power supply or power on the product before confirming the area to which the workpiece moves is safe.**
   The movement of the workpiece may cause an accident.
7. **Do not touch the product when it is energized and for some time after power has been disconnected, as it is very hot.**
   Doing so may lead to a burn due to the high temperature.
8. **Before installation, wiring, and maintenance, the voltage should be checked with a tester 5 minutes after the power supply has been turned off.**
   Otherwise, an electric shock, fire, or injury may result.
9. **Static electricity may cause malfunction or break the controller. Do not touch the controller while power is supplied.**
   When touching the controller for maintenance, take sufficient measures to eliminate static electricity.
10. **Do not use the product in an area where dust, powder dust, water, chemicals, or oil is in the air.**
    It will cause failure or malfunction.
11. **Do not use the product in an area where a magnetic field is generated.**
    It will cause failure or malfunction.
12. **Do not install the product in an environment containing flammable gas, explosive gas, or corrosive gas.**
    It could lead to fire, explosion, or corrosion.

13. **Radiant heat from strong heat sources, such as a furnace, direct sunlight, etc., should not be applied to the product.**
    It will cause failure of the controller or its peripheral devices.
14. **Do not use the product in an environment subject to a temperature cycle.**
    It will cause failure of the controller or its peripheral devices.
15. **Do not use the product in a place where surges are generated.**
    When there are units that generate a large amount of surge around the product (e.g. solenoid type lifters, high-frequency induction furnaces, motors, etc.), this may cause deterioration or damage to the product's internal circuit. Avoid sources of surge generation and crossed lines.
16. **Do not install the product in an environment under the effect of vibrations and impacts.**It will cause failure or malfunction.
17. **When a surge-generating load, such as a relay or solenoid valve, is driven directly, use a product that incorporates a surge absorption element.**
18. **The power supplies should be separated between the controller power and the I/O signal power, and both power supplies must not be of the "inrush-current limited" type.**
    If the power supply is of the "inrush-current limited" type, a voltage drop may occur during the acceleration or deceleration of the actuator.

Installation

⚠ **Warning**

1. **Install the controller and its peripheral devices on a fire-proof material.**
   Direct installation on or near a flammable material may cause a fire.
2. **Do not install the product in a place subject to vibrations and impacts.**
   It will cause failure or malfunction.
3. **Do not mount the controller and its peripheral devices together with a large-sized electromagnetic contactor or no-fuse breaker, which generate vibration, on the same panel. Mount them on different panels, or keep the controller and its peripheral devices away from such a vibration source.**
4. **Install the controller and its peripheral devices on a flat surface.**
   If the mounting surface is distorted or uneven, an unacceptable force may be added to the housing, etc., causing problems.
5. **Take measures to ensure that the operating temperatures of the controller and its peripheral devices are within the range of the specifications. Also, the controller should be installed with spaces between its sides and the other structures or components.**
   Failure to do so may cause the malfunction of the controller and its peripheral devices or a fire.

Power Supply

⚠ **Caution**

1. **Use a power supply that has low noise between lines and between the power and ground.**
   In cases where noise is high, an isolation transformer should be used.
2. **To prevent lightning surges, appropriate measures should be taken. Ground the surge absorber for lightning separately from the grounding of the controller and its peripheral devices.**

Grounding

⚠ **Warning**

1. **Be sure to carry out grounding in order to ensure the noise tolerance.**
2. **Dedicated grounding should be used.**
   Grounding should be to a D-class ground. (Ground resistance of 100 Ω or less)
3. **Grounding should be performed near the controller and its peripheral devices to shorten the grounding distance.**
4. **In the unlikely event that a malfunction is caused by the ground, please disconnect it.**

Wiring

⚠ **Warning**

1. **Do not apply any excessive force to cables, such as repeated bending, tensioning, or placing a heavy object on the cables.**
   It may cause an electric shock, fire, or the breaking of a wire.
2. **Connect wires and cables correctly.**
   Incorrect wiring could break the controller or its peripheral devices depending on the seriousness.
3. **Do not connect wires while power is being supplied.**
   It may cause the controller to break or its peripheral devices could be damaged, causing a malfunction.
4. **Do not carry the product by holding its cables.**
   It may cause an injury or damage to the product.
5. **Do not connect power or high-voltage cables in the same wiring path as the unit.**
   The product can malfunction due to noise and surge voltage interference in the signal line from the power and high-voltage cables.
   Separate the wiring of the controller and its peripheral devices from that of the power and high-voltage cables.
6. **Confirm wiring insulation.**
   Insulation failure (interference with other circuits, poor insulation between terminals, etc.) could introduce excessive voltage or current to the controller or its peripheral devices and damage them.

Maintenance

⚠ **Warning**

1. **Perform a maintenance and inspection periodically.**
   Confirm wiring and screws are not loose.Loose screws or wires may cause unintentional malfunction.
2. **Conduct an appropriate functional inspection after completing the maintenance and inspection.**At times where the equipment or machinery does not operate properly, conduct an emergency stop of the system.
   Otherwise, an unexpected malfunction may occur and it will become impossible to ensure safety. Conduct a test of the emergency stop in order to confirm the safety of the equipment.
3. **Do not disassemble, modify, or repair the controller and its peripheral devices.**
4. **Do not put anything conductive or flammable inside of the controller.**
   It may cause a fire.
5. **Do not conduct an insulation resistance test or withstand voltage test on this product.**
6. **Ensure sufficient space for maintenance activities.**
   Design the system allowing the required space for maintenance and inspection.

4.1 Design and selection

⚠ **Caution**

1. **After the transferred object is stopped by the electric stopper, lateral load (conveyor load) must not be applied during the rod retraction operation.**

4.2 Mounting

⚠ **Caution**

1. **Do not drop or hit the electric stopper cylinder to avoid scratching and denting the mounting surfaces.**
   Scratches and gouges may malfunction.
2. **When mounting the electric stopper cylinder, form a relief part for the motor and tighten the screws properly at the torque within the specified range.**
   Tightening the screws with a higher torque than the maximum value may cause malfunction. In addition, tightening the screws with a lower torque may cause the displacement of the mounting position.

The hole and screw dimension of recommended mounting plate

When mounting the lever type with a built-in shock absorber from the lever direction, refer to the recommended hole sizes in the table below and machine the mounting holes accordingly.
When mounting the stopper cylinder by inserting it into the mounting holes from the lever direction as shown in the figure below, note that the outer diameter (O.D.) of the lever part is larger than the diameter of the rod cover boss part.

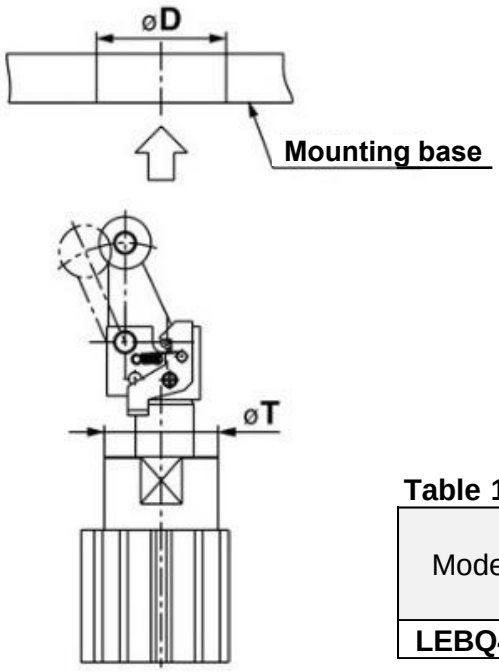

(Figure 1)

Table 1 Recommended hole size

Model	Rod cover boss outer diameter	Mounting base recommended hole size	Max. tightening torque [N·m]
	ΦT	ΦD	-
LEBQ40	44	48	5.2

3. Auto Switch Mounting

Tightening with a torque that exceeds the specified range may cause malfunction, while tightening with a torque below the range may cause misalignment of the gripping position.

Auto switch proper mountingposition (Detection at Stroke End)

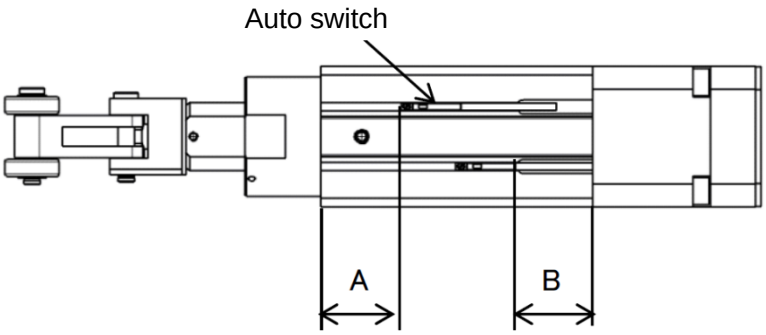

Auto switch proper mounting position [mm]

Model	Auto switch model			
	D-M9□ D-M9□W		D-M9□V D-M9□WV	
	A	B	A	B
LEBQ40	29.6	28.4	29.6	30.4

* Adjust the auto switch after confirming the operating conditions in the actual setting

Mounting of auto switch

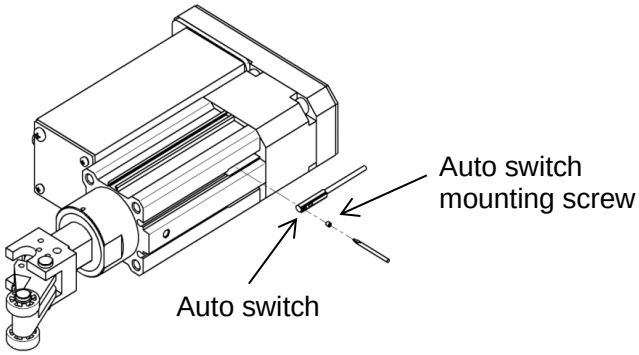

Tightening torque for Auto switch mounting screw [N・m]

Auto switch model	Tightening torque
D-M9□ D-M9□W D-M9□V D-M9□WV	0.05 to 0.15

Operating Range [mm]

Auto switch model	Model
	LEBQ40
D-M9□ D-M9□W D-M9□V D-M9□WV	5.5

* Since the operating range is provided as a guideline Including hysteresis, it cannot be guaranteed. (assuming approximately ±30% dispersion)
It may vary substantially depending on an ambient environment.

4.3 Handling

⚠ **Caution**

1. **The actuator has a short brake function to protect the internal boards.**
   Due to the short brake function, the rotation of the motor will be limited should the number of rotations exceed the specified number. The operation brake will be applied when the operation speed is too fast.

5. Stopper Cylinder Precautions

*Complies with stopper cylinder RSQ series.

5.1 Design and selection

⚠ **Warning**

1. **Use within the specified range.**
   If the condition exceeds the specified operating range, it will cause excessive impact or vibration to the actuator, leading to possible damages.

⚠ **Caution**

1. **Do not allow a pallet to collide with the cylinder when the lever is upright.**
   In case of a lever with built-in shock absorber type, do not collide the next pallet against the first one while the lever is standing erect. Otherwise, all energy will be applied to the cylinder body.
2. **When a stopping a load directly connected to the cylinder at an intermediate position:**
   Apply the operating range in the catalog only in these cases where the stopper cylinder is used to stop pallets on a conveyor belt.
3. **Do not scratch or gouge the sliding part of the piston rod or guide rod.**
   Scratches and gouges may malfunction.
4. **Note that for the lever type with built-in shock absorber (without lock mechanism), the lever may be pushed back in the opposite direction of the conveyance direction by the return force of the shock absorber unless a thrust of 10 N or more continues to act on the lever in the conveyance direction after pallet impact.**
   If it is necessary to keep the lever in an upright position, select a lever with a lock mechanism.
5. **The range of use of the lever type with built-in shock absorber is the range in which the shock absorber can be used without damage due to absorption by the shock absorber and cylinder rigidity, and differs from the range in which a complete soft stop can be achieved.**
   Since a collision may occur at the end of the range near the upper limit, a sufficient margin should be allowed when soft stopping is required.

5.2 Mounting

⚠ **Caution**

1. **Do not apply rotational torque to the cylinder piston rod.**
   Align the cylinder so that it is parallel to the working face of the work in order to prevent rotational torque acting on the cylinder piston rod.

5.3 Handling

⚠ **Caution**

1. **For the lever type model with a lock mechanism, do not remove the grease applied to the lock pin and the bracket.**
   When using the cylinder continuously with no grease applied, the lock and unlock may not operate correctly due to unusual wear of the lock pin or rod cover. Check the grease application state periodically and apply the grease when necessary.
   ∗ **Grease pack part no.: GR-S-010 (10g)**

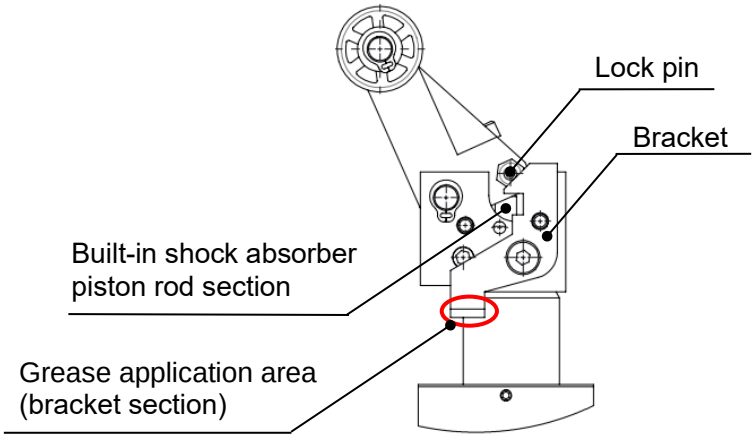

   Please do not remove the grease applied to the piston rod end of the built-in shock absorber and periodically check the condition of the grease.
2. **For cylinders with locking mechanism, do not apply external force from the opposite side when the lever is locked.**
   Lower the cylinder before adjusting the conveyor or moving a transferred object.
3. **Backlash exists in the lever lock mechanism due to its structure.**
   The stopping position of the pallet varies to some extent depending on the mass of the material to be conveyed, the operating conditions of the conveyor, and other factors.
4. **Do not use oil to the piston rod sliding part.**
   Retracting failure of the cylinder may occur.
5. **Do not get your hands caught during cylinder operation.**
   Since the lever section moves up and down when the cylinder is in operation, take sufficient care to avoid getting your hands caught between the rod cover and the lever holder.
6. **Protect the shock absorber from water, cutting oil and dust.**
   Leaving shock absorber unprotected may result in oil leakage and/or general operation failure.

5.4 Maintenance

⚠ **Warning**

1. **Perform maintenance inspection according to bellow the procedures indicated in the operation manual.**
   If handled improperly, malfunction and damage of machinery or equipment may occur.

⚠ **Caution**

1. **The stopping condition of the transferred object may vary due to changes in ambient temperature or changes in the shock absorber resistance over time.**

2. **How to replace the shock absorber**
   1) Loosen the hexagon socket head set screw (M3) on the piston rod part.

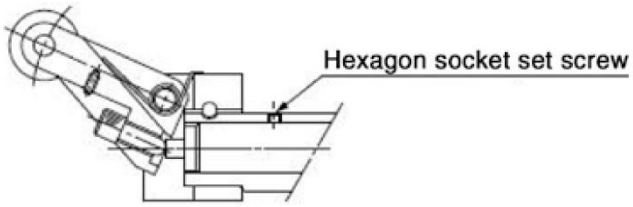

   2) With the lever tilted as shown, pull out the shock absorber to remove it, and replace it with a new shock absorber.

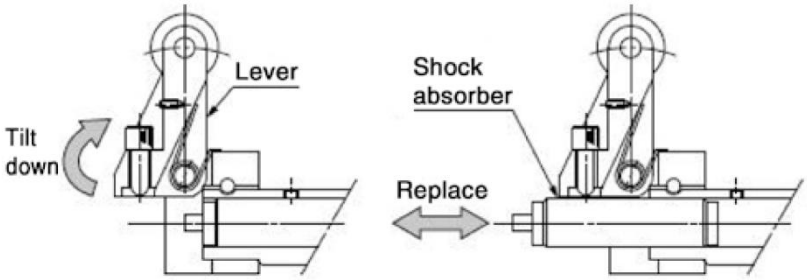

   3) Tighten the hexagon socket head set screw to the piston rod part. After the hexagon socket head set screw stops, turn it a further 1/4 rotation. Overtightening the hexagon socket head set screw may damage it, and the shock absorber may also malfunction as a result.
   * Tightening torque: 0.29 [N·m]

   4) After replacement, apply grease to the shock absorber piston rod end.

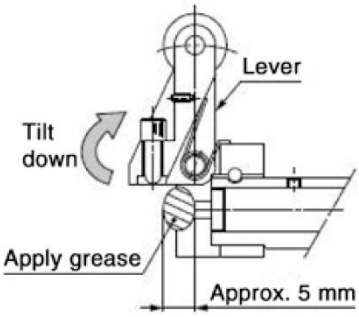

3. How to change the direction of the piston rod

1) Loosen the 2 hexagon socket head set screws (M3) for mounting the non-rotating guide in the rod cover part.
2) Reposition the piston rod into the desired position.
   ∗ To prevent rotational torque from being applied to the piston rod, make sure that the cylinder contact surface isparallel to the pallet contact surface.
3) Tighten the 2 hexagon socket head set screws to securethe non-rotating guide. When tightening, apply screwlocking adhesive to the hexagon socket head set screws.
   ∗ Tightening torque: 0.63 [N･m]
   ∗ The non-rotating guide is secured with 2 hexagon socket head set screws.
   If 1 of the screws is overtightened, the non-rotating guide may come into contact with the piston rod, resulting in a malfunction. Therefore, tighten the hexagon socket head set screws aalternately to prevent such contact.
4) Make sure that the cylinder operates smoothly.

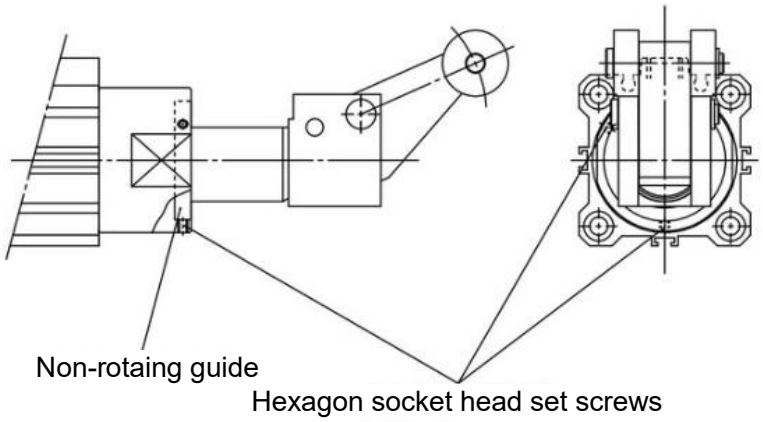

4. Check items

The following checks are required for proper cylinder operation.

1) Smoothness of performance
2) Looseness of cylinder mounting bolt and any other bolts
3) Looseness of the cylinder mounting frame and abnormal deflection
4) Damage to piston rod sliding parts
5) Oil leakage of shock absorber, abnormal impact sound, vibration or external appearance.
6) Looseness of bolt in the locking mechanism, or abnormality of parts.
7) Lubrication of piston rod and rotating sections (e.g. Lever pin, Roller pin)
8) Auto switch position

Check all the above. If there is any problem, examine the cause and take necessary actions such as further screw tightening and grease application.

5. Troubleshooting

No.	Phenomenon	Cause	Countermeasure
1	"ON" operation / initial Piston rod is not fall.	1) The cable is not connected or has been disconnected.	Confirm that the cable is connected correctly
		2) The resistance being applied to the actuator constantly exceeds the actuators specification.	Keep the load/resistance within the specified range.
	"ON" operation Piston rod is not fall.	1) Power failure or defective connection	Repair power source and rewire it properly.
		2) Power Shortage	Keep the load/resistance within the specified range. Power consumption : 48W Rated voltage : 24VDC
		3) High speed operation	Keep the load/resistance within the specified range. High speed operation may result in cylinder deformation or breakage due to impact force.
		4) Piton rod deformed or broken.	Replace Actuator.
		5) DC motor does not rotate due to abrasion..	Replace Actuator.
		6) Operating instructions with lateral loads applied.	Do not apply lateral loads during operation.
	"ON" operation - The piston rod cannot reach the lower stroke end, then, moves to the upper stroke end. - Significant delay in the piston rod retraction time	1) The internal boards are broken due to high cycle operation or ambient temperature.	Keep the load/resistance within the specified range.
		2) Piton rod deformed or broken.	Replace Actuator.
		3) DC motor does not rotate correctly due to abrasion.	Replace Actuator.
2	"OFF" operation Piston rod is not rise.	1) High speed operation	Keep the load/resistance within the specified range. High speed operation may result in cylinder deformation or breakage due to impact force.
		2) Piton rod deformed or broken.	Replace Actuator.
	"OFF" operation - Significant delay in the piston rod extension time	1) Micro-voltage is applied when the operation is OFF due to a breakage of the relay.	Check that the voltage is 0 V when the operation is OFF.
		2) The internal boards are broken due to high cycle operation or ambient temperature.	Keep the load/resistance within the specified range.
		3) Piton rod deformed or broken.	Replace Actuator.
	"OFF" operation - Knocking operation while the piston rod is being extended	1) If the sliding resistance of the product decreases and the number of motor rotation increases, a short brake may be applied.	This is not a malfunction of the product. The product can be operated continuously.
		2) Low ambient temperature	
3	Damage	1) High speed operation	Keep the load/resistance within the specified range.High speed operation may result in cylinder deformation or breakage due to impact force.
		2) Abnormal external force	Interference of mechanism, eccentric load or excess load leads to cause deformation or damage of the actuator. Eliminate these factors.
		3) Shock absorber adjustment problem	Adjust the shock absorber to the optimum absorption position to stop work pieces gently.

No.	Phenomenon	Cause	Countermeasure
3	Damage	4) If the next works collides while the lever is standing erect (after kinetic energy has been absorbed by the shock absorber).	Do not allow works to collide while the lever is standing erect.
4	Transferred object does not stop. Transferred object does not pass.	1) Conveyor adjustment problem	Set the conveyor height with in the range from the lower limit position to the upper limit position shown in the figure.
		2) Cancel cap is mounted on Actuator.	Please remove the cancel cap.
	Transferred object is not soft stop.	1) Shock absorber adjustment problem	When shipped, the shock absorber is adjusted to the maximum resistance value. Please select the optimum absorption position (resistance value).
		2) Changes in ambient temperature Aging of the shock absorber resistance	Check the stopping condition periodically and adjust the shock absorber resistance as necessary.
5	Switch does not turn “ON”. (Switch does not turn “ON” occasionally.)	1) Power failure or defective connection	Repair power source and rewire it properly.
		2) Switch out of position	Slide switch on cylinder to see where it turns “ON”, and reset in the correct position.
		3) Reduction in magnetic force	If there is a source of magnetic force nearby, place cylinder away from it or shield it.
	Switch does not turn “OFF”. (Switch does not turn “OFF” occasionally.)	1) Welded reed switch contacts	Check voltage and load are lower than rated values, and replace switch.
		2) Continuous “ON” state due to external magnetic force	If there is a source of magnetic force nearby, place cylinder away from it or shield it.

Revision history
Completely revised from No.LEB*-OM0190Q
June 2024 First edition
July 2024 Revision
February 2025 Revision

SMC Corporation

Tel: + 81 3 5207 8249 Fax: +81 3 5298 5362
URL https://www.smcworld.com

Note: Specifications are subject to change without prior notice and any obligation on the part of the manufacturer.
© SMC Corporation All Rights Reserved