No. DOC1080290
NN67563402

Operation Manual

PRODUCT NAME

Electric Stopper Cylinder / Controller Type

MODEL / Series / Product Number

LEBQ32・50-X1 Series

Controller
JXC Series

#This manual describes the actuators operation in combination with the JXC series controllers.
#Refer to the manual relevant to the controller being used for full operating instructions.

SMC Corporation

Contents

1. Product Specifications 3

1.1 How to Order 3
1.2 Specification 4
1.3 Dimensions 5
1.4 Construction 7

2. Electric Actuators Precautions 8

Wiring of cables / Common precautions 8
Electric actuators / Common precautions 10
Design and selection 10
Mounting 12
Handling 13
Operating environment 15
Maintenance 16
Actuator with Lock / Common precautions 17
Controller (Including Driver) and Peripheral Devices / Common precautions 18
Design and selection 18
Handling 18
Installation 20
Power Supply 20
Grounding 20
Wiring 21
Maintenance 21

3. Electric Stopper Cylinder /Specific Product Precautions 22

3.1 Design and selection 22
3.2 Mounting 22
3.3 Handling 23

4. Stopper Cylinder Precautions 24

4.1 Design and selection 24
4.2 Mounting 24
4.3 Handling 25
4.4 Maintenance 26

4. Troubleshooting 28

Electric Actuator / Stopper Type Safety Instructions

These safety instructions are intended to prevent hazardous situations and/or equipment damage. These instructions indicate the level of potential hazard with the labels of **"Caution," "Warning"** or **"Danger."** They are all important notes for safety and must be followed in addition to International Standards (ISO/IEC)*1), and other safety regulations.

*1) ISO 4414: Pneumatic fluid power - General rules and safety requirements for systems and their components
ISO 4413: Hydraulic fluid power - General rules and safety requirements for systems and their components
IEC 60204-1: Safety of machinery - Electrical equipment of machines - Part 1: General requirements
ISO 10218-1: Robots and robotic devices - Safety requirements for industrial robots - Part 1:Robots
etc.

Danger	**Danger** indicates a hazard with a high level of risk which, if not avoided, will result in death or serious injury.
Warning	**Warning** indicates a hazard with a medium level of risk which, if not avoided, could result in death or serious injury.
Caution	**Caution** indicates a hazard with a low level of risk which, if not avoided, could result in minor or moderate injury.

⚠ Warning

1. The compatibility of the product is the responsibility of the person who designs the equipment or decides its specifications.
Since the product specified here is used under various operating conditions, its compatibility with specific equipment must be decided by the person who designs the equipment or decides its specifications based on necessary analysis and test results. The expected performance and safety assurance of the equipment will be the responsibility of the person who has determined its compatibility with the product. This person should also continuously review all specifications of the product referring to its latest catalog information, with a view to giving due consideration to any possibility of equipment failure when configuring the equipment.

2. Only personnel with appropriate training should operate machinery and equipment.
The product specified here may become unsafe if handled incorrectly. The assembly, operation and maintenance of machines or equipment including our products must be performed by an operator who is appropriately trained and experienced.

3. Do not service or attempt to remove product and machinery/equipment until safety is confirmed.
1. The inspection and maintenance of machinery/equipment should only be performed after measures to prevent falling or runaway of the driven objects have been confirmed.
2. When the product is to be removed, confirm that the safety measures as mentioned above are implemented and the power from any appropriate source is cut, and read and understand the specific product precautions of all relevant products carefully.
3. Before machinery/equipment is restarted, take measures to prevent unexpected operation and malfunction.

4. SMC products cannot be used beyond their specifications. They are not developed, designed, and manufactured to be used under the following conditions or environments. Use under such conditions or environments is not allowed.
1. Conditions and environments outside of the given specifications, or use outdoors or in a place exposed to direct sunlight.
2. Use for nuclear power, railways, aviation, space equipment, ships, vehicles, military application, equipment affecting human life, body, and property, combustion equipment, entertainment equipment, emergency shut-off circuits, press clutches, brake circuits, safety equipment, etc., and use for applications that do not conform to standard specifications such as catalogs and operation manuals.
3. Use for interlock circuits, except for use with double interlock such as installing a mechanical protection function in case of failure. Please periodically inspect the product to confirm that the product is operating properly.

Electric Actuator / Stopper Type Safety Instructions

⚠ Caution

SMC develops, designs, and manufactures products to be used for automatic control equipment, and provides them for peaceful use in manufacturing industries.
Use in non-manufacturing industries is not allowed.
Products SMC manufactures and sells cannot be used for the purpose of transactions or certification specified in the Measurement Act of each country.
The new Measurement Act prohibits use of any unit other than SI units in Japan.

Limited warranty and Disclaimer/Compliance Requirements

The product used is subject to the following “Limited warranty and Disclaimer” and “Compliance Requirements”. Read and accept them before using the product.

Limited warranty and Disclaimer

1. The warranty period of the product is 1 year in service or 1.5 years after the product is delivered, whichever is first.*2)
   Also, the product may have specified durability, running distance or replacement parts. Please consult your nearest sales branch.
2. For any failure or damage reported within the warranty period which is clearly our responsibility, a replacement product or necessary parts will be provided.
   This limited warranty applies only to our product independently, and not to any other damage incurred due to the failure of the product.
3. Prior to using SMC products, please read and understand the warranty terms and disclaimers noted in the specified catalog for the particular products.

***2) Vacuum pads are excluded from this 1 year warranty.**
A vacuum pad is a consumable part, so it is warranted for a year after it is delivered.
Also, even within the warranty period, the wear of a product due to the use of the vacuum pad or failure due to the deterioration of rubber material are not covered by the limited warranty

Compliance Requirements

1. The use of SMC products with production equipment for the manufacture of weapons of mass destruction (WMD) or any other weapon is strictly prohibited.
2. The exports of SMC products or technology from one country to another are governed by the relevant security laws and regulations of the countries involved in the transaction. Prior to the shipment of a SMC product to another country, assure that all local rules governing that export are known and followed.

1. Product Specifications

1.1 How to Order

How to order is shown below.

LEBQ □ 32 □ - 20 □ □ - □ □ - X1

(1) (2) (3) (4) (5) (6) (7) (8)

(1) Mounting

A	Ends tapped
B	Through hole

(2) Size

32
50

(4) Stroke[mm]

Symbol	Size
20	32
30	50

(3) Stopper direction

E	Opposite side of motor	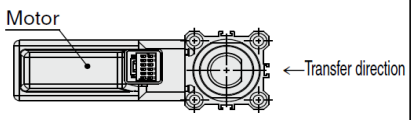
R	Motor right side	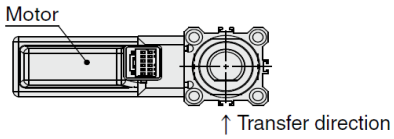
L	Motor left side	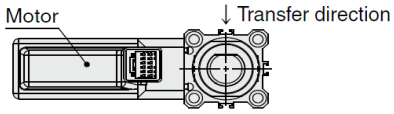
M	Motor side	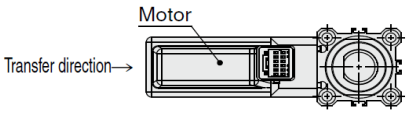

* For rod end shape option "K," the direction is the chamfered direction.

(5) Rod end shape

K	Chamfered type
R	Roller type
L	Lever type (with shock absorber)
B	Lever type (with shock absorber adjustment)
C	Lever type (with shock absorber adjustment + cancel cap)
D	Lever type (with shock absorber adjustment + lock)
E	Lever type (with shock absorber adjustment + cancel cap + lock)

(6) Motor option

Nil	None
C	With motor cover

(7) Actuator cable type/length

*Refer to the catalog.

(8) Controller/Driver type

*Refer to the catalog.

⚠Coution

The actuator body and controller are sold as a package.
If when only the actuator is purchased separately,
confirm that the combination of the controller,
which you have and the actuator is compatible.

1.2 Specification

The basic specifications of this product are shown below.

	Model	LEBQ32-X1	LEBQ50-X1
Actuator specifications	**Stroke [mm]**	20	30
	Speed [mm/s]	80	135
	Screw lead [mm]	5	8
	Impact/Vibration resistance [m/sec2]*2	150/30	
	Actuation type	Slideing screw + Cam	
	Operating temperature range [℃]	5～40	
	Operating humidity range [%RH]	90 or less (No condensation and freezing)	
Electric specifications	**Motor size**	□28	□42
	Motor type	Step motor (Servo/24 VDC)	
	Encoder (Angular displacement sensor)	Incremental	
	Rated voltage [V]	24 VDC ±10%	
	Power [W]*3	Max. power 37	Max. power 46

*1 Since this product is not equipped with a magnet, auto switch cannot be used.

Weight [kg]

Rod end configuration	LEBQ32-X1	LEBQ50-X1
Chamfered type, Roller type	0.81	1.76
Lever with built in shock absorber	0.90	1.99

an axial direction and a perpendicular direction to the lead screw.
(The test was performed with the actuator in the initial state.)

Vibration resistance: No malfunction occurred in a test ranging between 45 to 2000 Hz. The test was performed in both an axial direction and a perpendicular direction to the lead screw.
(The test was performed with the actuator in the initial state.)

*3 Indicates the max. power during operation (including the controller)
This value can be used for the selection of the power supply.

*4 This product can only be mounted in the vertical upward position. (Please install the product so that the rod is facing vertically upward.)

Dimensions
LEBQ□32M-20K□-X1

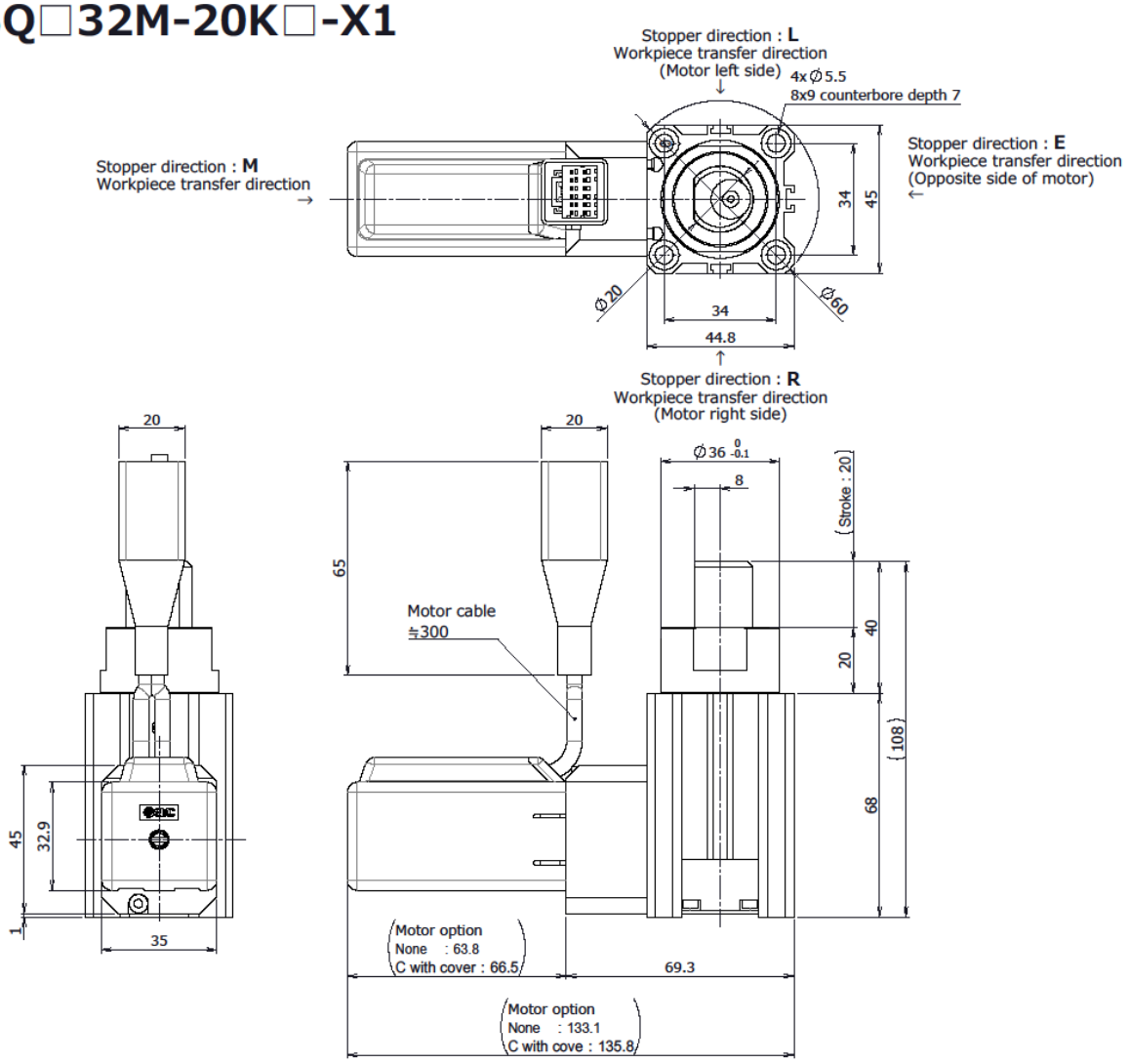

Fig 1. Rod end shape
R : For foller type

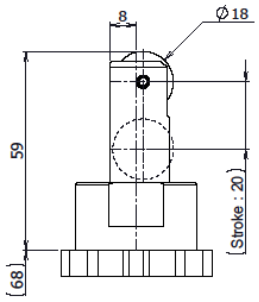

Fig 2. Rod end shape
L/B/C/D/E : For lever type

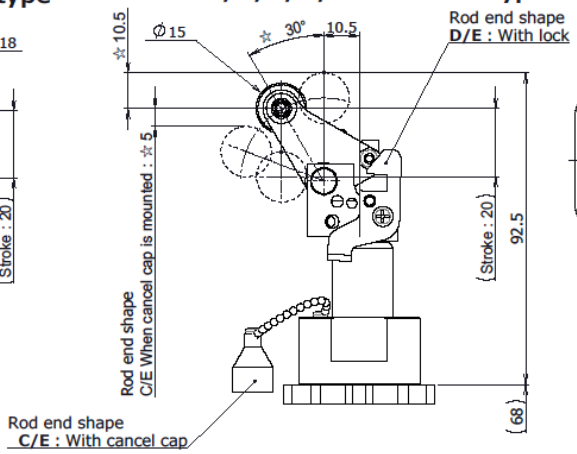

Fig 3. Mounting
A : For both ends tapped type

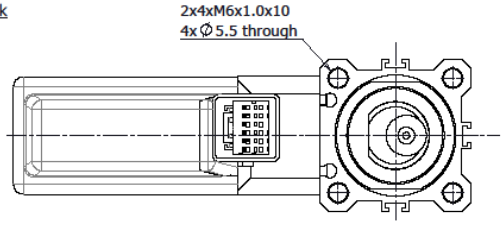

Rod end shape B/C/D/E : For lever type (with shock absorber adjustment)
This drawing shows when the adjustment bolt is lowered (max. energy absorption).
The☆dimension changes when the adjustment bolt is raised (reduced energy absorption).

Adjustment bolt lowered (max. energy absorption)	→	Adjustment bolt raised (min. energy absorption)
☆5	→	☆6
☆10.5	→	☆9
☆30°	→	☆20°

Note1) This drawing shows the "with motor cover" specification.
Note2) This drawing shows the "motor side" stopper direction specification.
Note3) This drawing shows the "chamfered type" rod end shape specification.
Refer to Fig. 1 and 2 for others specifications.

Dimensions
LEBQ□50M-30□□-X1

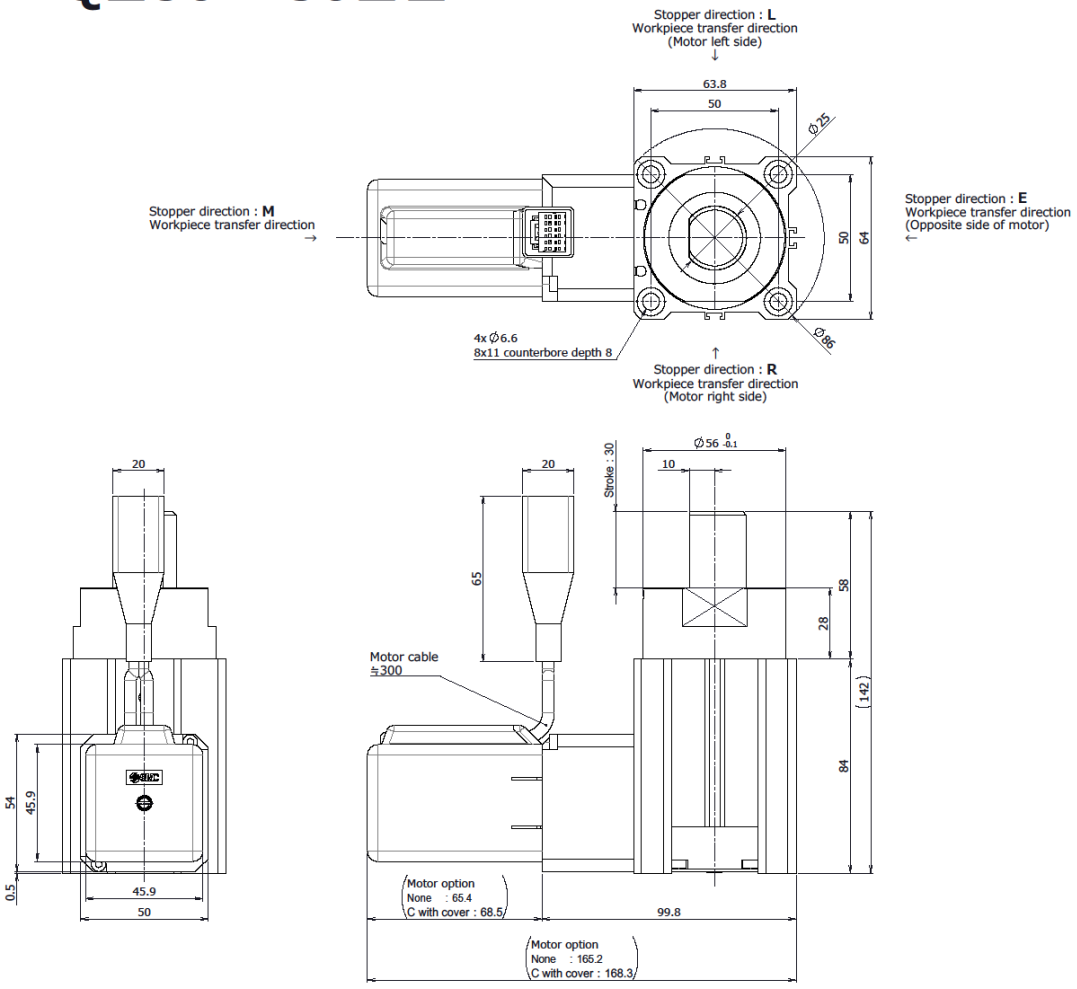

Fig 1. Rod end shape
R : For foller type

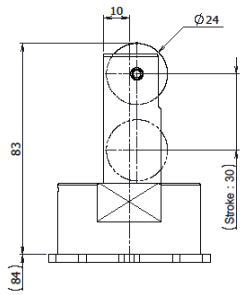

Fig 2. Rod end shape
L/B/C/D/E : For lever type

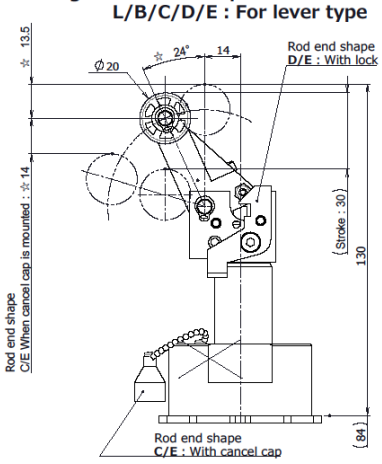

Fig 3. Mounting
A : For both ends tapped type

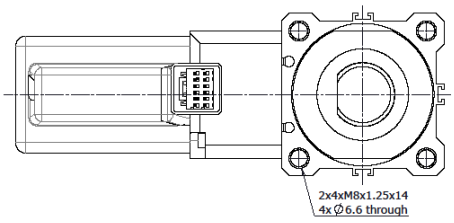

Note1) This drawing shows the "with motor cover" specification.
Note2) This drawing shows the "motor side" stopper direction specification.
Note3) This drawing shows the "chamfered type" rod end shape specification.
Refer to Fig. 1 and 2 for others specifications.

Rod end shape B/C/D/E : For lever type (with shock absorber adjustment)
This drawing shows when the adjustment bolt is lowered (max. energy absorption).
The☆dimension changes when the adjustment bolt is raised (reduced energy absorption).

Adjustment bolt lowered (max. energy absorption) → Adjustment bolt raised (min. energy absorption)
☆14 → ☆16
☆13.5 → ☆11.5
☆24° → ☆16°

1.4 Construction

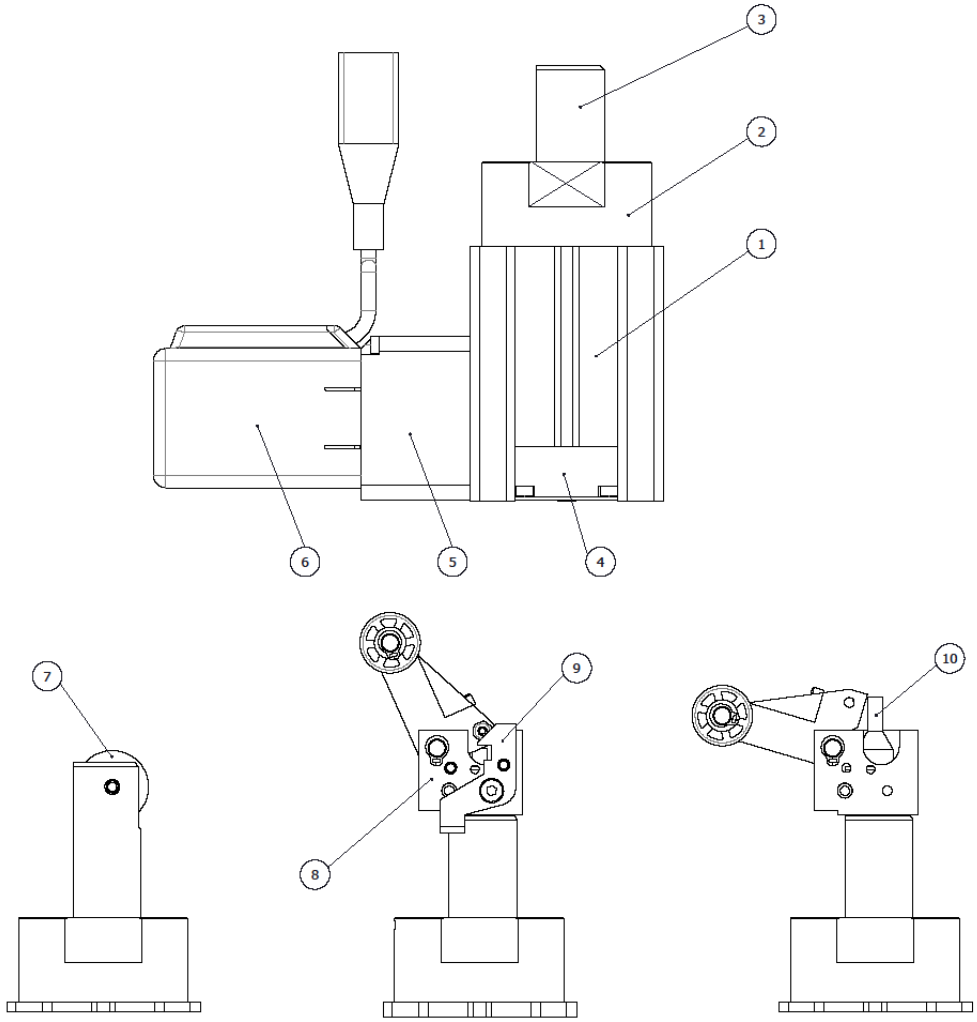

Component Parts

No.	Description	Material	Note
1	Cylinder tube	Aluminium alloy	Anodized
2	Rod cover assembly	-	-
3	Piston rod	Carbon steel	Hard chrome plating
4	Cam receiver	Aluminium alloy	Anodized
5	Housing	Aluminium alloy	Anodized
6	Motor cover	Synthetic resin	"With cover" only
7	Roller	Synthetic resin	"Roller type" only
8	Lever holder assembly	-	"Lever type" only
9	Lock mechanism assembly	-	"With lock mechanism" only
10	Cancel cap assembly	-	"With cancel cap" only

Replacement Parts/Shock Absorb

Size	Order no.
32	RB1007-X225
50	RB1407-X552

Wiring of cables / Common precautions

⚠ **Warning**

1. **Adjustment, installation, inspection, or wiring changes should be conducted after the power supply to this product has been turned off.**
   Electrical shock, malfunction, or damage can result.
2. **Never disassemble the cable. Use only the specified cables.**
3. **Never connect or disconnect the cable or connector with the power on.**

⚠ **Caution**

1. **Wiring should be done correctly.**
   For each terminal, voltages other than those stipulated in the operation manual should not be applied.
2. **Connect the connector securely.**
   Check for correct connector wiring and polarity.
3. **Handling noise**
   If the noise is at the same wavelength as the signal lines, it will lead to malfunction.
   As a countermeasure, separate the high and low electrical lines, shorten the length of wiring, etc.
4. **Do not connect power or high-voltage cables in the same wiring path as the unit.**
   The product can malfunction due to noise and surge voltage interference in the signal line from power and high-voltage cables.Separate the wiring of the controller and its peripheral device from that of power and high-voltage cables.
5. **Be careful that cables are not caught by actuator movement.**
6. **Operate with cables such that they are not easily moved.**
   Avoid bending cables at sharp angles where they enter the product.
7. **Avoid twisting, folding, rotating, or applying external force to the cable.**
   Electric shock, wire breakage, contact failure, or a loss of product control may occur.
8. **Do not move cables connected to the actuator.**
   The motor and lock cables are not robotic cables and can be broken when moved. Therefore, secure the cables and the connectors (part “A” in the figure below) in place during set up.

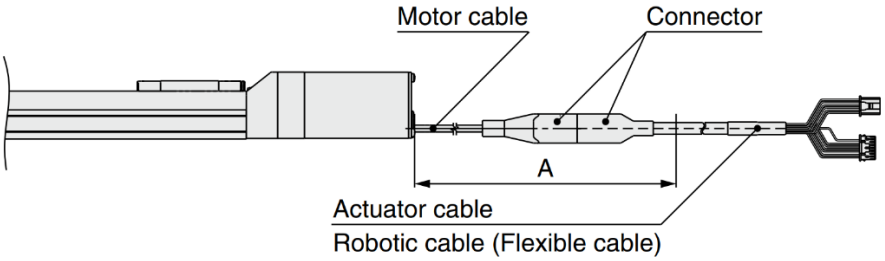

9. **Select a “robotic cable (flexible cable)” when repeated bending of the actuator cable is required. Also, do not put cables into a flexible moving tube with a radius smaller than the specified value (50 mm or longer).**
   Electric shock, wire breakage, contact failure, or a loss of product control may occur if “standard cables” are used for repeated bending.

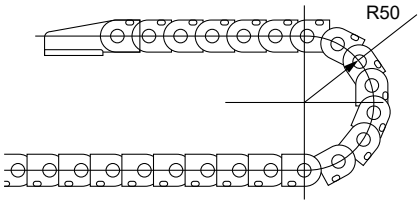

10. **Confirm wiring insulation.**
    Insulation failure (interference with other circuits, poor insulation between terminals, etc.) could introduce excessive voltage or current to the controller or its peripheral devices, causing damage to them.

11. **The speed and force may change depending on the cable length, load, and mounting conditions.**
    Furthermore, if the cable length exceeds 5 m, then it will decrease by up to 10% for every additional 5m. (At 15 m: Reduced by up to 20%)
12. **When checking the conductivity of the cable, be careful not to deform the connector's mating hole and terminals.**
    Inserting a non-compatible connector, tool, cylinder-shaped object, etc., into the connector's mating hole can cause the mating hole or terminals to become deformed, which may cause contact failure or disconnection.
13. **Refrain from plugging in and unplugging the connector frequently.**
    Doing so may result in contact failure or disconnection.

[Transportation]

⚠ **Caution**

1. **Do not carry or swing the product by the motor or cable**

Design and selection

⚠ **Warning**

1. **Be sure to read the operation manual (this manual and the one for the controller: LEC/JXC series).**
   Handling or usage/operation other than that specified in the operation manual may lead to breakage or operation failure of the product. Any damage attributed to use beyond the specifications is not covered by the warranty.
2. **There is a possibility of dangerous sudden action by the product if the sliding parts of the machinery are twisted due to external forces, etc.**
   In such cases, human injury may occur, such as by hands or feet getting caught in the machinery, or damage to the machinery itself may occur. Design the machinery so as to avoid such dangers.
3. **A protective cover is recommended to minimize the risk of personal injury.**
   If a driven object and the moving parts of the product are in close proximity, personal injury may occur. Design the system to avoid contact with the human body.
4. **Securely tighten all stationary parts and connected parts so that they will not become loose.**
   When the product operates with high frequency or is installed where there is a lot of vibration, ensure that all parts remain secure.
5. **Consider a possible loss of power source.**
   Take measures to prevent injury and equipment damage in the event of a power source failure.
6. **Consider emergency stops.**
   Design so that human injury and/or damage to machinery and equipment will not be caused when machinery is stopped by a safety device under abnormal conditions, such as a power outage or a manual emergency stop.
7. **Consider the whole system.**
   Design the system so that human injury or equipment damage will not occur upon the restart of operation of the whole system.
8. **Never disassemble the product or make any modifications, including additional machining.**
   Doing so may cause human injury and/or an accident.
   It may also cause the deterioration of the product's performance.
9. **Do not use the stop signals, the "EMG" of the controller and the stop switch on the teaching box, as the emergency stop of the system.**
   The stop signals, "EMG" of the controller and the stop switch on the teaching box, are for decelerating and stopping the actuator. Design the system with an emergency stop circuit which applies to the relevant safety standards separately.
10. **When using the product vertically for applications, it is necessary to install a built-in safety device.**
    The table may fall due to the weight of a workpiece. The safety device should not interfere with the normal operation of the machine.

⚠ **Caution**

1. **Operate within the limits of the maximum usable stoke.**
   The product will be damaged if it is used with a stroke which exceeds the maximum stroke.
   Refer to the specifications of the product.
2. **When the product repeatedly cycles with partial strokes, operate it at a full stroke at least once a day or every 1000 strokes.**
   Otherwise, lubrication may run out.
3. **Do not use the product in applications where excessive external force or impact force is applied to it.**
   The product can be damaged. The components, including the motor, are manufactured to precise tolerances. Even a slight deformation may cause a malfunction or seizure.
4. **During operation (positioning operation or pushing operation), it cannot be returned to the origin position.**
5. **Refer to the Auto Switches Precautions (pages 991 to 995) if an auto switch is to be built in and used.**
6. **Step motor (servo/24 VDC) and servo motor (24 VDC) specifications with the following model number are not compliant with UL Standards: "Controller/Driver type: Without controller/driver (Nil)."**
   Individual actuators are not certified as UL Standards compliant products.
7. **When UL standards compliance is required in order to use the LECP/A series, the electric actuator and controller/driver should be used with a UL1310 class 2 power supply.**
8. **Do not exceed the product specifications even if a work load is supported by external guides.**
   Although the actuator moment is reduced by external guides, the required transport ability (the relationship between the speed and the work load) is not reduced.

Mounting

⚠ **Warning**

1. **Keep the manual in a safe place for future reference.**
   The product should be mounted and operated only after thoroughly reading the operation manual and understanding its contents.
2. **Observe the tightening torque for screws.**
   Tighten the screws to the recommended torque for mounting the product.
3. **Do not make any alterations to this product.**
   Alterations made to this product may lead to a loss of durability or damage to the product, which can lead to human injury or damage to other equipment and machinery.
4. **When connecting, make sure the rod axis and the load, and the direction of the movement match.**
   Failure to do so may cause complications with the lead screw, such as wear or damage.
5. **When an external guide is used, connect the moving parts of the actuator and the load in such a way that there is no interference at any point within the stroke.**
   Do not scratch or dent the sliding parts of the product tube, piston rod, etc., by striking or grasping them with other objects. The components are manufactured to precise tolerances. Even a slight deformation may cause a malfunction or seizure.
6. **Prevent the seizure of rotating parts (pins, etc.) by applying grease.**
7. **Do not use the product until you confirm that the equipment can operate properly.**
   After mounting or repair, connect the power supply to the product and perform appropriate functional inspections to check it is mounted properly.
8. **When one side is fixed**
   When an actuator is operated at a high speed with one end fixed and the other free (basic, flange, or direct mount types), a bending moment may act on the actuator due to the vibration generated at the stroke end, which can damage the actuator. In such a case, install a mounting bracket to suppress the vibration of the actuator body, or reduce the speed so that the actuator does not vibrate. Also, use a mounting bracket when moving the actuator body or when a long stroke actuator is mounted horizontally and fixed at one end.
9. **Do not apply strong impact or an excessive moment while mounting the product or a workpiece.**
   If an external force over the allowable moment is applied, it may cause play in the guide or an increase in the sliding resistance.

10. **Maintenance space**
    Reserve sufficient space for maintenance.

Handling

⚠ Warning

1. **Do not touch the motor during operation.**
   The surface temperature of the motor can increase to approx. 80°C due to operating conditions. The temperature may also increase due to energization. As it may cause burns, do not touch the motor when in operation.
2. **If abnormal heating, smoking, fire, etc., occurs in the product, immediately shut off the power supply.**
3. **Stop operation at once if there are abnormal noises or vibrations.**
   Abnormal noises or vibrations may mean that the product is not properly mounted, and if allowed to continue in this state, damage to the equipment may occur.
4. **Never touch the rotating parts of the motor while in operation.**
5. **Before installing, adjusting, inspecting, or performing maintenance on the product, controller, and related equipment, be sure to shut off the power supply.**
   Then, lock it so that no one other than the person working can turn the power on, or implement measures such as a safety plug.
6. **In the case of an actuator that has a servo motor (24 VDC), the motor phase detection step is conducted by inputting the servo's on signal just after the controller power is turned on.**
   The motor phase detection step moves the table/rod the distance of the one screw-lead as the maximum.
   (The motor rotates in the reverse direction if the table/rod hits an obstacle such as the end stop damper.)
   Take the motor phase detection step into consideration when installing and operating this actuator.

⚠ Caution

1. **Keep the controller and the actuator combined as delivered for use.**
   The actuator's parameters are set at the time of shipment. If it is combined with a different set of parameters, failure can result.
2. **Conduct the following inspection before operation.**
   (a) Confirm that the power supply line and each signal line is not damaged.
   (b) Confirm that the power supply line and each signal line is not loosened.
   (c) Confirm that the electric actuator/cylinder/controller/driver is not mounted loosely.
   (d) Confirm that the electric actuator/cylinder/controller/driver is operating correctly.
   (e) Confirm the function of the emergency stop of the whole system.
3. **If several persons are to be working conjointly, determine the procedure, signs, measures against abnormality, and restarting measures in advance. Then, have someone else, supervise the work.**
4. **The product may operate at a speed different from the set speed depending on the load and resistance.**
   When selecting a product, check the catalog for instructions regarding selection and specifications.
5. **Do not apply a load, impact, or resistance in addition to the transferred load during the return to origin.**
   If the product is made to return to origin by pushing force, a displacement of the origin position may occur.
6. **Do not remove the name plate.**
7. **Operation tests should be done at a low speed. Start operation by predefined speed after confirming there are no problems.**
8. **Do not apply forces of impact, collision, or resistance to the moving parts of an actuator in operation.**
   Doing so will cause a decrease in product life, damage to the product, etc.

[Grounding]

⚠ **Warning**

1. **Be certain to ground the actuator.**
2. **Dedicated grounding should be used.**
   Grounding should be to a D-class ground. (Ground resistance of 100 Ω or less.)
3. **Grounding should be performed near the actuator to shorten the grounding distance.**
4. **The cross-sectional area of this wire shall be a minimum of 2 mm^2.**
5. **Avoid common grounding with other devices.**

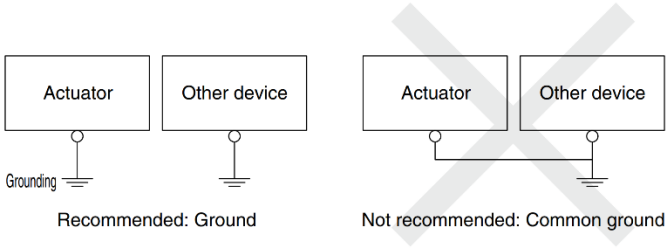

Recommended: Ground　　Not recommended: Common ground

[Unpackaging]

⚠ **Caution**

1. **Check that the received product is as ordered.**
   If a product different from the one ordered is installed, injury or damage can result.

Operating environment

⚠ **Warning**

1. **Avoid use in the following environments.**
   a. Areas with large amounts of dust or cutting chips that could enter the product
   b. Areas where the ambient temperature exceeds the specified range (Refer to the specifications.)
   c. Areas where the ambient humidity exceeds the specified range (Refer to the specifications.)
   d. Areas with corrosive gas, flammable gas, sea water, water, or steam that could adhere to the product
   e. Areas where strong magnetic or electric fields are generated
   f. Areas where direct vibration or impact shock is applied to the product
   g. Areas where there are large amounts of dust or there is exposure to water/oil droplets
   h. Areas that are exposed to direct sunlight (ultraviolet rays)
   i. Areas at altitudes of over 1000 m
   Heat radiation performance and withstand voltage may decline as a result.
   For details, consult withSMC.
2. **Do not use in an environment where the product is directly exposed to liquid, such as cutting oils.**
   If cutting oil, coolant, or oil mist adheres to the product, failure or increased sliding resistance can result.
3. **Install a protective cover when the product is used in an environment directly exposed to foreign matters, such as dust, cutting chips, and spatter.**
   Looseness or increased sliding resistance can result.
4. **Shade the product from direct sunlight.**
5. **In locations near heat sources, block them off.**
   When there is a heat source surrounding the product, the radiated heat from the heat source can increase the temperature of the product beyond the operating temperature range. Protect it with a cover, etc.
6. **Levels of the base oil of grease may decrease due to the external environment and operating conditions, causing a decline in lubrication performance and a shortened life of the product.**

[Storage]

⚠ **Warning**

1. **Do not store the product in a place in direct contact with rain or water drops or where it is exposed to harmful gas or liquid.**
2. **Store in an area that is shaded from direct sunlight and has a temperature and humidity within the specified range (–10°C to 60°C and 35 to 85% no condensation or freezing).**
3. **Do not apply vibration or impact to the product during storage.**

⚠ **Warning**

1. **Do not disassemble or repair the product.**
   Fire or electric shock can result. Contact SMC if the disassembly of the product is required for maintenance.
2. **Before modifying or checking the wiring, the voltage should be checked with a tester 5 minutes after the power supply has been turned off.**
   Failure to do so may result in electrical shock.

⚠ **Caution**

1. **Perform maintenance and inspection according to the procedures indicated in the operation manual.**
   Improper handling can cause an injury, damage, or the malfunction of equipment and machinery.
2. **Removal of equipment**
   Before equipment is removed, first confirm that measures are in place to prevent the dropping or runaway of driven objects, etc. Proceed only after cutting off the electric power. When starting up again, proceed with caution after confirming that conditions are safe.
3. **Be sure to cut the power to the controller and disconnect the electric actuator cable before moving the electric actuator slider manually by hand.**
   If the slider is moved with the electric actuator and controller still connected, the induced voltage of the motor will go to the controller, making it difficult to move the electric actuator smoothly. Moreover, frequently moving the electric actuator slider may result in controller damage or malfunction due to the induced voltage.

[Lubrication]

⚠ **Caution**

1. **The product has been lubricated for life by the manufacturer and does not require any further lubrication.**
   When lubrication is applied, special grease must be used. Please read the maintenance manual of each actuator.

Actuator with Lock / Common precautions

⚠ **Warning**

1. **Do not use the lock as a safety brake or as a control that requires a locking force.**
   The lock used for the product with lock is designed to prevent the dropping of workpieces.
2. **For vertical mounting, use the product with lock.**
   If the product is not equipped with a lock, the product will move and drop the workpiece when the power is removed. Please ensure that your safe equipment designs include measures to prevent the falling of workpieces.
3. **"Drop prevention" is a safety precaution that prevents a workpiece from dropping due to its weight when the product operation is stopped and the power supply is turned off.**
4. **Do not apply an impact load or strong vibration while the lock is activated.**
   If an external impact load or strong vibration is applied to the product, the lock will lose its holding force and damage to the sliding parts of the lock or a reduced service life may result. The same adverse effects may also occur when the lock slips due to a force exceeding the holding force, as this accelerates the wear of the lock.
5. **Do not apply liquid, oil, or grease to the lock or the area surrounding it.**
   When liquid, oil, or grease are adhered to the sliding parts of the lock, its holding force will reduce significantly. Any changes in lock sliding performance and condition may cause a lock release malfunction.
6. **Take measures against drops and check that safety is assured before the mounting, adjustment, and inspection of the product.**
   If the lock is released with the product mounted vertically, a work- piece can drop due to its weight.
7. **When the actuator is operated manually (when the SVRE output signal is off), supply 24 VDC to the [BK RLS] terminal of the power supply connector.**
   If the product is operated without releasing the lock, the wearing of the lock sliding surface will be accelerated, causing a reduction in the holding force and the life of the locking mechanism.
8. **Do not supply 24 VDC power supply continuously to the [BK RLS (Lock release)] terminal.**
   Stop supplying 24 VDC power supply to the [BK RLS (Lock release) terminal during normal operation. If power is supplied to the [BK RLS] terminal continuously, the lock will be released, and workpieces may be dropped when the stop signal (EMG) is received.
9. **The actuator may unable to unlock when the sliding part for locking reaches its life due to the rotation sliding of the shoe during operation. When the lock mechanism reaches its life, please contact SMC sales office for the replacement parts.**
   The sliding part for locking may make noise during operation, but this is normal.

Controller (Including Driver) and Peripheral Devices / Common precautions

Design and selection

⚠ **Warning**

1. **Be sure to apply the specified voltage.**
   Otherwise, malfunction or breakage may occur. If the applied voltage is lower than the specified voltage, it is possible that the load will not be able to be moved due to an internal voltage drop of the controller. Please check the operating voltage before use.
2. **Do not operate the product beyond the specifications.**
   Otherwise, a fire, malfunction, or actuator damage may result. Please check the specifications before use.
3. **Install an emergency stop circuit.**
   Please install an emergency stop outside of the enclosure so that the system operation can be stopped immediately and the power supply can be intercepted.
4. **In order to prevent any damage caused by the breakdown or malfunction of the controller and its peripheral devices, a backup system should be established in advance by giving a multiple-layered structure or a fail-safe design to the equipment, etc.**
5. **If a danger of human injury is expected due to abnormal heat generation, smoking, ignition, etc., of the controller and its peripheral devices, cut off the power supply of the product and the system immediately.**

⚠ **Caution**

1. **Use an actuator <u>with the lock</u> option if the actuator <u>will</u> <u>not be mounted horizontally</u> for use.**
   Burnout of the internal parts of the controller may occur. If the actuator is not equipped with a lock, it will move and drop the workpiece when the power and servo are turned OFF.

Handling

⚠ **Warning**

1. **Do not touch the inside of the controller and its peripheral devices.**
   Doing so may cause an electric shock or damage to the controller.
2. **Do not perform the operation or setting of the product with wet hands**Doing so may cause an electric shock.
3. **Products with damage or those missing any components should not be used.**
   An electric shock, fire, or injury may result.
4. **Use only the specified combination between the electric actuator and controller.**
   Failure to do so may cause damage to the actuator or the controller.
5. **Be careful not to be hit by workpieces while the actuator is moving.**
   It may cause an injury.
6. **Do not connect the power supply or power on the product before confirming the area to which the workpiece moves is safe.**
   The movement of the workpiece may cause an accident.
7. **Do not touch the product when it is energized and for some time after power has been disconnected, as it is very hot.**
   Doing so may lead to a burn due to the high temperature.
8. **Before installation, wiring, and maintenance, the voltage should be checked with a tester 5 minutes after the power supply has been turned off.**
   Otherwise, an electric shock, fire, or injury may result.
9. **Static electricity may cause malfunction or break the controller. Do not touch the controller while power is supplied.**
   When touching the controller for maintenance, take sufficient measures to eliminate static electricity.
10. **Do not use the product in an area where dust, powder dust, water, chemicals, or oil is in the air.**
    It will cause failure or malfunction.
11. **Do not use the product in an area where a magnetic field is generated.**
    It will cause failure or malfunction.
12. **Do not install the product in an environment containing flammable gas, explosive gas, or corrosive gas.**
    It could lead to fire, explosion, or corrosion.

13. **Radiant heat from strong heat sources, such as a furnace, direct sunlight, etc., should not be applied to the product.**
    It will cause failure of the controller or its peripheral devices.
14. **Do not use the product in an environment subject to a temperature cycle.**
    It will cause failure of the controller or its peripheral devices.
15. **Do not use the product in a place where surges are generated.**
    When there are units that generate a large amount of surge around the product (e.g. solenoid type lifters, high-frequency induction furnaces, motors, etc.), this may cause deterioration or damage to the product's internal circuit. Avoid sources of surge generation and crossed lines.
16. **Do not install the product in an environment under the effect of vibrations and impacts.**It will cause failure or malfunction.
17. **When a surge-generating load, such as a relay or solenoid valve, is driven directly, use a product that incorporates a surge absorption element.**
18. **The power supplies should be separated between the controller power and the I/O signal power, and both power supplies must not be of the "inrush-current limited" type.**
    If the power supply is of the "inrush-current limited" type, a voltage drop may occur during the acceleration or deceleration of the actuator.

Installation

⚠ **Warning**

1. **Install the controller and its peripheral devices on a fire-proof material.**
   Direct installation on or near a flammable material may cause a fire.
2. **Do not install the product in a place subject to vibrations and impacts.**
   It will cause failure or malfunction.
3. **Do not mount the controller and its peripheral devices together with a large-sized electromagnetic contactor or no-fuse breaker, which generate vibration, on the same panel. Mount them on different panels, or keep the controller and its peripheral devices away from such a vibration source.**
4. **Install the controller and its peripheral devices on a flat surface.**
   If the mounting surface is distorted or uneven, an unacceptable force may be added to the housing, etc., causing problems.
5. **Take measures to ensure that the operating temperatures of the controller and its peripheral devices are within the range of the specifications. Also, the controller should be installed with spaces between its sides and the other structures or components.**
   Failure to do so may cause the malfunction of the controller and its peripheral devices or a fire.

Power Supply

⚠ **Caution**

1. **Use a power supply that has low noise between lines and between the power and ground.**
   In cases where noise is high, an isolation transformer should be used.
2. **To prevent lightning surges, appropriate measures should be taken. Ground the surge absorber for lightning separately from the grounding of the controller and its peripheral devices.**

Grounding

⚠ **Warning**

1. **Be sure to carry out grounding in order to ensure the noise tolerance.**
2. **Dedicated grounding should be used.**
   Grounding should be to a D-class ground. (Ground resistance of 100 Ω or less)
3. **Grounding should be performed near the controller and its peripheral devices to shorten the grounding distance.**
4. **In the unlikely event that a malfunction is caused by the ground, please disconnect it.**

Wiring

⚠ **Warning**

1. **Do not apply any excessive force to cables, such as repeated bending, tensioning, or placing a heavy object on the cables.**
   It may cause an electric shock, fire, or the breaking of a wire.
2. **Connect wires and cables correctly.**
   Incorrect wiring could break the controller or its peripheral devices depending on the seriousness.
3. **Do not connect wires while power is being supplied.**
   It may cause the controller to break or its peripheral devices could be damaged, causing a malfunction.
4. **Do not carry the product by holding its cables.**
   It may cause an injury or damage to the product.
5. **Do not connect power or high-voltage cables in the same wiring path as the unit.**
   The product can malfunction due to noise and surge voltage interference in the signal line from the power and high-voltage cables.
   Separate the wiring of the controller and its peripheral devices from that of the power and high-voltage cables.
6. **Confirm wiring insulation.**
   Insulation failure (interference with other circuits, poor insulation between terminals, etc.) could introduce excessive voltage or current to the controller or its peripheral devices and damage them.

Maintenance

⚠ **Warning**

1. **Perform a maintenance and inspection periodically.**
   Confirm wiring and screws are not loose.Loose screws or wires may cause unintentional malfunction.
2. **Conduct an appropriate functional inspection after completing the maintenance and inspection.**At times where the equipment or machinery does not operate properly, conduct an emergency stop of the system.
   Otherwise, an unexpected malfunction may occur and it will become impossible to ensure safety. Conduct a test of the emergency stop in order to confirm the safety of the equipment.
3. **Do not disassemble, modify, or repair the controller and its peripheral devices.**
4. **Do not put anything conductive or flammable inside of the controller.**
   It may cause a fire.
5. **Do not conduct an insulation resistance test or withstand voltage test on this product.**
6. **Ensure sufficient space for maintenance activities.**
   Design the system allowing the required space for maintenance and inspection.

3.1 Design and selection

⚠ **Warning**

1. **After the transferred object is stopped by the electric stopper, lateral load (conveyor load) must not be applied during the rod retraction operation.**
2. **Do not apply excessive external force to the motor.**
   Miss-alignment of the motor may lead to signal detection error, increasing internal friction or damage to the motor.

3.2 Mounting

⚠ **Caution**

1. **Do not drop or hit the electric stopper cylinder to avoid scratching and denting the mounting surfaces.**
   Scratches and gouges may malfunction.
2. **When mounting the electric stopper cylinder, form a relief part for the motor and tighten the screws properly at the torque within the specified range.**
   Tightening the screws with a higher torque than the maximum value may cause malfunction. In addition, tightening the screws with a lower torque may cause the displacement of the mounting position.

The hole and screw dimension of recommended mounting plate

When mounting the lever type with a built-in shock absorber from the lever direction, refer to the recommended hole sizes in the table below and machine the mounting holes accordingly.
When mounting the stopper cylinder by inserting it into the mounting holes from the lever direction as shown in the figure below, note that the outer diameter (O.D.) of the lever part is larger than the diameter of the rod cover boss part.

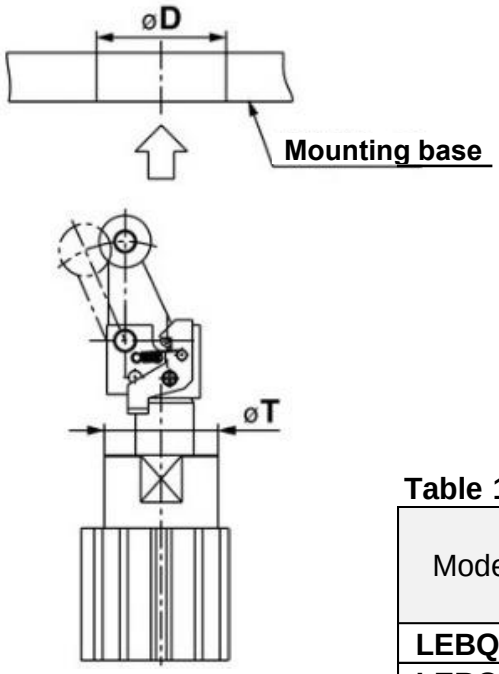

(Figure 1)

Table 1 Recommended hole size

Model	Rod cover boss outer diameter	Mounting base recommended hole size	Max. tightening torque [N·m]
	ΦT	ΦD	-
LEBQ32	36	38	5.2
LEBQ50	56	57	12.5

3.3 Handling

⚠ **Caution**

1. **INP output signal for Positioning operation**
   When the product comes within the set range by step data [In positon], output signal will be turned on.
   Initial value: Set to [0.50] or higher
2. **Do not operate this product in "Pushing operation" mode.**
   The piston may be caught inside the actuator, causing damage or malfunction of the product.
3. **The Moving force should be set to “Initial input value” (100%).**
   If the positioning force is set below “Initial input value”, it can displace the travel time, which may cause an alarm.
4. **Do not apply a load, impact or resistance, in addition to a transferred load during the “Return to origin” operation.**
   Otherwise, the origin can be displaced since it is based on the detected motor torque.
5. **When mounting the actuator, leave a gap of 40mm or more to allow for bending of the actuator cable.**

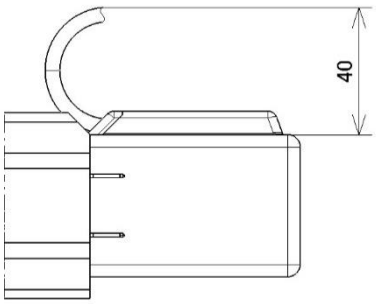

6. **Operate the manual override to move the rod when the product is not energized.**
   When manual operation is required, check the manual override position of the electric stopper cylinder and secure enough space around it. Do not apply a load larger than the allowable rotating torque to the manual override. It may lead to damage or malfunction.

Maximum allowable rotational torque [N･m]	LEBQ
	0.6

*Complies with stopper cylinder RSQ series.

4.1 Design and selection

⚠ **Warning**

1. **Use within the specified range.**
   If the condition exceeds the specified operating range, it will cause excessive impact or vibration to the actuator, leading to possible damages.

⚠ **Caution**

1. **Do not allow a pallet to collide with the cylinder when the lever is upright.**
   In case of a lever with built-in shock absorber type, do not collide the next pallet against the first one while the lever is standing erect. Otherwise, all energy will be applied to the cylinder body.
2. **When a stopping a load directly connected to the cylinder at an intermediate position:**
   Apply the operating range in the catalog only in these cases where the stopper cylinder is used to stop pallets on a conveyor belt.
3. **Do not scratch or dent the sliding parts of the piston.**
   The piston rod has not been hardened. If there is a danger of a pallet scratching or nicking the piston rod due to sharp edges, etc., the pallet should not be used. Damage to the piston rod may lead to improper operation.
4. **Note that for the lever type with built-in shock absorber (without lock mechanism), the lever may be pushed back in the opposite direction of the conveyance direction by the return force of the shock absorber unless a thrust of 10 N or more continues to act on the lever in the conveyance direction after pallet impact.**
   If it is necessary to keep the lever in an upright position, select a lever with a lock mechanism.
5. **The range of use of the lever type with built-in shock absorber is the range in which the shock absorber can be used without damage due to absorption by the shock absorber and cylinder rigidity, and differs from the range in which a complete soft stop can be achieved.**
   Since a collision may occur at the end of the range near the upper limit, a sufficient margin should be allowed when soft stopping is required.

4.2 Mounting

⚠ **Caution**

1. **Do not apply rotational torque to the cylinder piston rod.**
   Align the cylinder so that it is parallel to the working face of the work in order to prevent rotational torque acting on the cylinder piston rod.

4.3 Handling

⚠ **Caution**

1. **For the lever type model with a lock mechanism, do not remove the grease applied to the lock pin and the bracket.**

   When using the cylinder continuously with no grease applied, the lock and unlock may not operate correctly due to unusual wear of the lock pin or rod cover. Check the grease application state periodically and apply the grease when necessary. The grease to be applied is available as grease pack. When the grease pack is required, order it using the part number shown below.

   ∗ **Grease pack part no.: GR-S-010 (10g)**

   Similarly, be careful not to remove the grease from the piston rod end of the built-in shock absorber. Check the grease application state periodically.

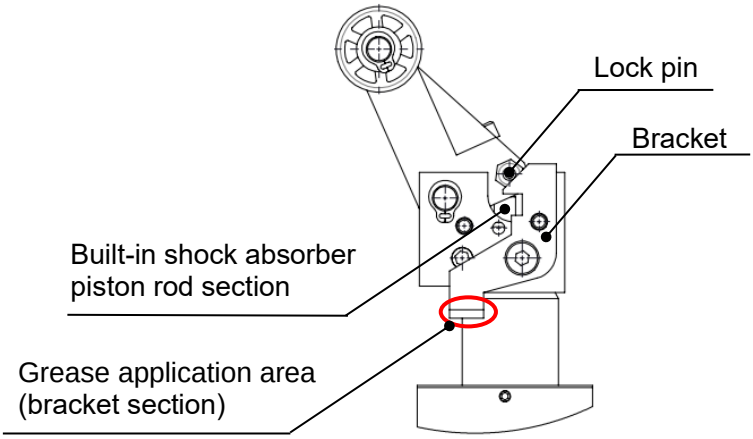

2. **For cylinders with locking mechanism, do not apply external force from the opposite side when the lever is locked.**

   Lower the cylinder before adjusting the conveyor or moving a transferred object.

3. **Backlash exists in the lever lock mechanism due to its structure.**

   The stopping position of the pallet varies to some extent depending on the mass of the material to be conveyed, the operating conditions of the conveyor, and other factors.

4. **Do not use oil to the piston rod sliding part.**

   Retracting failure of the cylinder may occur.

5. **Do not let your hand become caught when operating the cylinder.**

   The lever holder goes up and down while the cylinder is in operation. Take care not to get your hand or fingers caught between the rod cover and lever holder.

6. **Do not let water, cutting oil or dust splash on the equipment.**

   This can cause oil leakage and malfunction of the shock absorber.

4.4 Maintenance

⚠ **Warning**

1. **Perform maintenance inspection according to bellow the procedures indicated in the operation manual.**
   If handled improperly, malfunction and damage of machinery or equipment may occur.

⚠ **Caution**

1. **The stopping condition of the transferred object may vary due to changes in ambient temperature or changes in the shock absorber resistance over time.**
   Check the stopping condition periodically and adjust the shock absorber resistance as necessary.
2. **How to replace the shock absorber**
   1) Loosen the hexagon socket head set screw (M3) on the piston rod part.

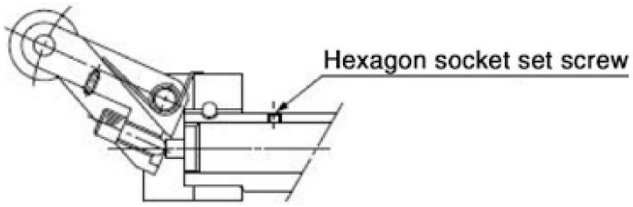

   2) With the lever tilted as shown, pull out the shock absorber to remove it, and replace it with a new shock absorber.

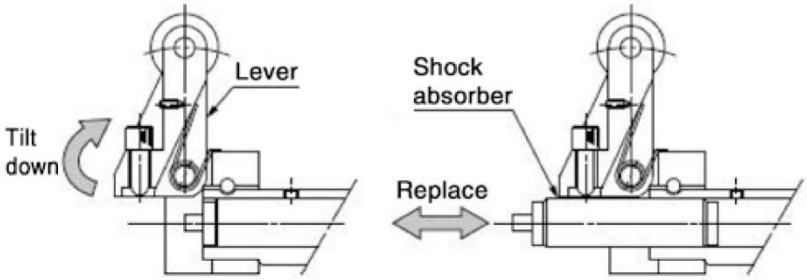

   3) Tighten the hexagon socket head set screw to the piston rod part. After the hexagon socket head set screw stops, turn it a further 1/4 rotation. Overtightening the hexagon socket head set screw may damage it, and the shock absorber may also malfunction as a result.
      * Tightening torque: 0.29 [N·m]

   4) After replacement, apply grease to the shock absorber piston rod end.

   ∗ **Grease pack part no.: GR-S-010 (10g)**

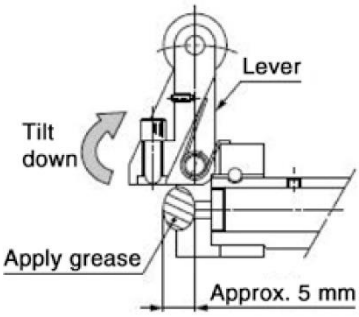

3. **How to change the direction of the piston rod**
   1) Loosen the 2 hexagon socket head set screws (M3) for mounting the non-rotating guide in the rod cover part.
   2) Reposition the piston rod into the desired position.
      ∗ To prevent rotational torque from being applied to the piston rod, make sure that the cylinder contact surface isparallel to the pallet contact surface.

3) Tighten the 2 hexagon socket head set screws to securethe non-rotating guide. When tightening, apply screwlocking adhesive to the hexagon socket head set screws.
   ∗ Tightening torque: 0.63 [N·m]
   ∗ The non-rotating guide is secured with 2 hexagon socket head set screws.
     If 1 of the screws is overtightened, the non-rotating guide may come into contact with the piston rod, resulting in a malfunction. Therefore, tighten the hexagon socket head set screws aalternately to prevent such contact.
4) Make sure that the cylinder operates smoothly.

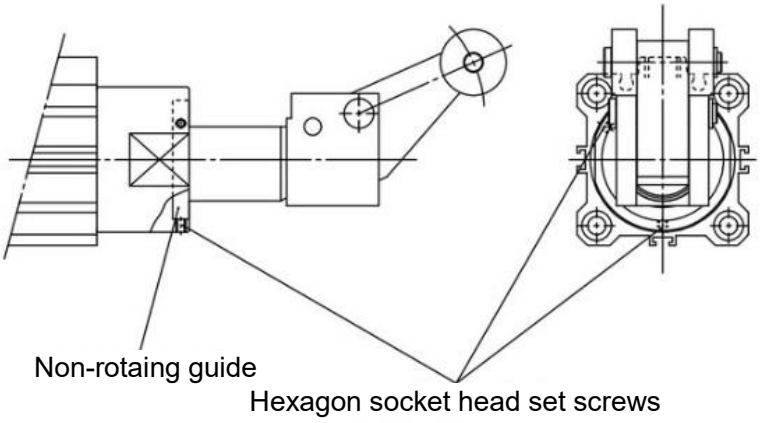

4. Check items

The following checks are required for proper cylinder operation.

1) Smoothness of performance
2) Change of piston speed and cycle time
3) Abnormality of stroke
4) Looseness of cylinder mounting bolt and any other bolts
5) Looseness of the cylinder mounting frame and abnormal deflection
6) Damage to piston rod sliding parts
7) Oil leakage of shock absorber, abnormal impact sound, vibration or external appearance.
8) Looseness of bolt in the locking mechanism, or abnormality of parts.
9) Lubrication of piston rod and rotating sections (e.g. Lever pin, Roller pin)
10) Auto switch position

Check all the above. If there is any problem, examine the cause and take necessary actions such as further screw tightening and grease application.

Alarms below are an abstract of representative examples.

For other alarms, refer to the controller operation manual.

No.	Phenomenon	Cause	Countermeasure
1. During test run	Fall to operate / Initial stage When power is supplied, alarm for “Phase Det ALM /code: 1-193” is generated. ↓ <Procedure for restart> “Turn the power supply off.” ↓ “Turn the power supply on”	The cable is not connected or has been disconnected	Confirm that the cable is connected correctly.
		The load/resistance applied to the actuator constantly exceeds the actuator specification.	Keep the load/resistance within specified range.
		The combination of the controller and actuator is not correct.	The controller and actuator combination at the time of shipment should not be changed.
		Excessive external force is applied, (including vibration) or impact load.	Operate within the specified range.
	Alarm for “Step data ALM1/code: 1-048” is generated ↓ <Procedure for restart> Input the “RESET” signal.	The step data settings are not correct. < Correct set condition > (1) Area 1 < Area 2 (2) Trigger LV ≦ Pushing force (3) Pushing speed ≦ Speed (4) Pushing force ≧ Min. pushing force	Review the contents of the step data.
	Alarm for “Servo off ALM /code: 1-098” is generated ↓ <Procedure for restart> Input the “RESET” signal.	Perform the “Return to origin”, the positioning operation and JOG operation during the “SVON”: OFF.	Perform the operation instruction after confirming that the input signal [SVON] is ON and then the output signal [SVRE] is ON.
	Alarm for “Drive ALM /code: 1-099” is generated. ↓ <Procedure for restart> Input the “RESET” signal.	Positioning or pushing operation were performed before the”return to origin”.	Provide the operation instruction after confirming that the input signal [SETUP] is ON and then the output signal [SETON] is ON.
	"ORIG direction" cannot be changed.	The "ORIG direction" has been changed, but the controller power supply has not been turned OFF.	Becomes effective after cycling power to the controller.

No.	Phenomenon	Cause	Countermeasure
2. During operation	"Posn failed/code: 1-149" is generated. ↓ <Procedure for restart> Controller version/SV1.0 or later Input the "reset signal." →"SVRE": Automatically ON	The lead screw had friction due to excessive external force (including vibration) or impact.	Operate within the specified range.
		The Power supply does not have sufficient capacity.	Check the power consumption for each actuator and controller: If necessary replace the power supply with a power supply of sufficient capacity.
		A load/resistance above the specified range has been applied to the actuator.	Use within the specification range.
		The cable is not connected or has been disconnected.	Confirm that the cable is connected correctly.
		It was not the intended origin position because the actuator pinched the workpiece during the"return to origin".	Remove the workpiece and restart the "Return to origin" command.
		Incorrect input [0] has been entered as the positioning force.	Check the step data. <Moving force>
		The step data position is not changed correctly after the return to origin direction is changed.	Check the step data. <Position>
		Because the operation of the step data is set to [INC/relative], the table comes into contact with an external object and does not move due to continuous operation.	Check the step data. <Position>
			Check if the correct operation instruction has been provided.
	Alarm for " Err overflow /code: 1-196" is generated. ↓ <Procedure for restart> "Turn the power supply off." ↓ "Turn the power supply on"	Added excessive external force (including vibration) or impact load.	Operate within the specified range.
		The Power supply does not have sufficient capacity.	Check the power consumption for each actuator and controller: If necessary replace the power supply with a power supply of sufficient capacity.
		A load/resistance above the specified range has been applied to the actuator.	Use within the specification range.
		The pushing operation is performed at the "Positioning operation position"	Review the content of the step data.
		The cable is not connected or has been disconnected.	Comfirm that the cable is connected correctly.
		The intended origin position has not been reached because the actuator pinched the workpiece during the "return to origin".	Remove the workpiece and restart the "return to origin" command.
		Incorrect input [0] has been entered as the positioning force.	Check the step data. <Moving force>
		The step data position has not been changed correctly after the return to origin direction has changed.	Check the step data. <Position>
		Because the operation of the step data is set to [INC/relative], the table comes into contact with an external object and does not move due to continuous operation.	Check the step data. <Position>
		Incorrect input [0] has been entered as the positioning force.	Check if correct operation instruction is provided.

No.	Phenomenon	Cause	Countermeasure
2. During operation	Alarm for "Over motor Vol/code: 1-145" is generated. ↓ < Procedure for restart > Input the "reset signal" → "SVRE": Automatically turns ON	The power supply is a "restricted inrush-current type", therefore an alarm has been generated due to voltage drop.	Replace the power supply with a ”nonrestricted inrush-current type” power supply. Refer to controller operation manual.
		The power supply does not have sufficient capacity.	Check the power consumption for each actuator and controller.
	Operation not completed /During operation (Not always, but may happen occasionally) Alarm for “Step data ALM2 /code: 1-051” is generated. ↓ <Procedure for restart> Input the “reset” signal.	Command invalid (unregistered) step data.	Check if the step data is valid (registered).
		Different input signal to the expected step number is inputted to the controller, because of a too short an interval between the input signal of the “IN*” and the “Drive” or inputting the signals at the same time.	Add an interval of 15ms (the recommendation is 30ms) or more between the input signals.
		Different input signal to the expected step number is inputted to the controller, because the input signal time was too short.	Maintain the state of the input signal for 15ms (the recommendation is 30ms) or more.
		Different input signal to the expected step number is inputted to the controller, caused by PLC or other device.	Check that the step number is inputted correctly for the required motion.
	- Operation completed by unexpected motion. - No alarm / During operation (Not always, but may happen occasionally)	Different input signal to the expected step number is inputted to the controller, because of a too short an interval between the input signal of the “IN*” and the “Drive” or inputting the signals at the same time.	Add an interval of 15ms (the recommendation is 30ms) or more between the input signals.
		Different input signal to the expected step number is inputted to the controller, because the input signal time was too short.	Maintain the state of the input signal for 15ms (the recommendation is 30ms) or more.
		Different input signal to the expected step number is inputted to the controller, caused by PLC or other device.	Check that the step number is inputted correctly for the required motion.
3	Output signal is unstable. Positioning completion signal [INP] is not output.	The value of [In position] in the step data is too small.	Check the step data. <In Pos> (Minimum value: 0.5)
4	Positioning repeatability is outside the specified range.	The controller shifts to the next operation by receiving the "INP" output signal.	Go to the next operation after receiving the “BUSY” output signal is outputted.
5	The operation time is delayed by the step date setting.	Operating conditions are outside of the specification range.	Check the model selection information.
6	Damage	Abnormal external force	Interference of mechanism, eccentric load or excess load leading to deformation or damage of the actuator. Eliminate these factors.
7	Cannot be actuated manually or by manual override adjustment screw (does not operate). (At stop (EMG) or SVRE[OFF])	Contacts the stroke end of the actuator or the workpiece.	Check the stroke position and how workpieces are mounted.

Revision history
No. DOC1080290
June 2024 First edition
July 2024 Revision
February 2025 Revision

SMC Corporation

Tel: + 81 3 5207 8249 Fax: +81 3 5298 5362
URL https://www.smcworld.com

Note: Specifications are subject to change without prior notice and any obligation on the part of the manufacturer.
© SMC Corporation All Rights Reserved