Operation Manual

PRODUCT NAME

Ionizer

MODEL / Series / Product Number

IZS4＊Series

SMC Corporation

Contents

Bar Type Ionizer Safety Instructions

These safety instructions are intended to prevent hazardous situations and/or equipment damage. These instructions indicate the level of potential hazard with the labels of **"Caution," "Warning"** or **"Danger."** They are all important notes for safety and must be followed in addition to International Standards (ISO/IEC)*1), and other safety regulations.

*1) ISO 4414: Pneumatic fluid power - General rules and safety requirements for systems and their components
ISO 4413: Hydraulic fluid power - General rules and safety requirements for systems and their components
IEC 60204-1: Safety of machinery - Electrical equipment of machines - Part 1: General requirements
ISO 10218-1: Robots and robotic devices - Safety requirements for industrial robots - Part 1:Robots
etc.

Danger	**Danger** indicates a hazard with a high level of risk which, if not avoided, will result in death or serious injury.
Warning	**Warning** indicates a hazard with a medium level of risk which, if not avoided, could result in death or serious injury.
Caution	**Caution** indicates a hazard with a low level of risk which, if not avoided, could result in minor or moderate injury.

Warning

1. The compatibility of the product is the responsibility of the person who designs the equipment or decides its specifications.
Since the product specified here is used under various operating conditions, its compatibility with specific equipment must be decided by the person who designs the equipment or decides its specifications based on necessary analysis and test results. The expected performance and safety assurance of the equipment will be the responsibility of the person who has determined its compatibility with the product. This person should also continuously review all specifications of the product referring to its latest catalog information, with a view to giving due consideration to any possibility of equipment failure when configuring the equipment.

2. Only personnel with appropriate training should operate machinery and equipment.
The product specified here may become unsafe if handled incorrectly. The assembly, operation and maintenance of machines or equipment including our products must be performed by an operator who is appropriately trained and experienced.

3. Do not service or attempt to remove product and machinery/equipment until safety is confirmed.
1. The inspection and maintenance of machinery/equipment should only be performed after measures to prevent falling or runaway of the driven objects have been confirmed.
2. When the product is to be removed, confirm that the safety measures as mentioned above are implemented and the power from any appropriate source is cut, and read and understand the specific product precautions of all relevant products carefully.
3. Before machinery/equipment is restarted, take measures to prevent unexpected operation and malfunction.

4. Our products cannot be used beyond their specifications. Our products are not developed, designed, and manufactured to be used under the following conditions or environments. Use under such conditions or environments is not covered.
1. Conditions and environments outside of the given specifications, or use outdoors or in a place exposed to direct sunlight.
2. Use for nuclear power, railways, aviation, space equipment, ships, vehicles, military application, equipment affecting human life, body, and property, fuel equipment, entertainment equipment, emergency shut-off circuits, press clutches, brake circuits, safety equipment, etc., and use for applications that do not conform to standard specifications such as catalogs and operation manuals.
3. Use for interlock circuits, except for use with double interlock such as installing a mechanical protection function in case of failure. Please periodically inspect the product to confirm that the product is operating properly.

Bar Type Ionizer Safety Instructions

⚠ Caution

We develop, design, and manufacture our products to be used for automatic control equipment, and provide them for peaceful use in manufacturing industries.
Use in non-manufacturing industries is not covered.
Products we manufacture and sell cannot be used for the purpose of transactions or certification specified in the Measurement Act.
The new Measurement Act prohibits use of any unit other than SI units in Japan.

Limited warranty and Disclaimer/Compliance Requirements

The product used is subject to the following “Limited warranty and Disclaimer” and “Compliance Requirements”. Read and accept them before using the product.

Limited warranty and Disclaimer

1. The warranty period of the product is 1 year in service or 1.5 years after the product is delivered, whichever is first.*2)
   Also, the product may have specified durability, running distance or replacement parts. Please consult your nearest sales branch.
2. For any failure or damage reported within the warranty period which is clearly our responsibility, a replacement product or necessary parts will be provided.
   This limited warranty applies only to our product independently, and not to any other damage incurred due to the failure of the product.
3. Prior to using SMC products, please read and understand the warranty terms and disclaimers noted in the specified catalog for the particular products.

***2) Vacuum pads are excluded from this 1 year warranty.**
A vacuum pad is a consumable part, so it is warranted for a year after it is delivered.
Also, even within the warranty period, the wear of a product due to the use of the vacuum pad or failure due to the deterioration of rubber material are not covered by the limited warranty

Compliance Requirements

1. The use of SMC products with production equipment for the manufacture of weapons of mass destruction (WMD) or any other weapon is strictly prohibited.
2. The exports of SMC products or technology from one country to another are governed by the relevant security laws and regulations of the countries involved in the transaction. Prior to the shipment of a SMC product to another country, assure that all local rules governing that export are known and followed.

Selection

⚠Warning

1) These products are intended for use in general factory automation equipment.

2) Use within the specified voltage and temperature range.
Operation with a voltage other than that specified can cause malfunction, damage to the product, electric shock or fire.

3) Use clean compressed air as fluid. (Air quality Class 2.6.3 specified in ISO 8573-1: 2010 is recommended.)
Never use flammable or explosive gas as fluid. This may lead to fire or explosion.

4) The product is not designed to be explosion proof.
Never use in an atmosphere of potential dust explosion, flammable gas or explosive gas. It may cause fire.

⚠Caution

1) Clean specification is not available with this product.
This product has not been cleaned. When using this product in a clean room environment, flush and confirm the product's purification level before use. A minute amount of particles are generated due to wearing of the emitters while the ionizer is operating.

Installation

⚠Warning

1) Secure enough space for maintenance, inspection and wiring.
When routing cables and tubings, secure sufficient maintenance space for the installation and removal of connector and One-touch fitting.
Consider the minimum bending radius of the cables and tubings and avoid bending them at an acute angle so that unreasonable stress is not applied to the mounting parts of the connectors and One-touch fittings. Position the connectors and One-touch fittings as close as possible.
Routing of the wiring and cables in unreasonable positions may cause malfunction, broken cables, and fire.

[Minimum bending radius] Power supply cable: 38mm Transition wiring cable: 38mm
Sensor cable: 25mm

Note: This is the minimum bend radius at 20°C. If the installation is at a lower temperature, the radium will be higher. When the cables are bent at a lower temperature than 20 °C, it may cause unreasonable force to be applied to the connectors.
Refer to the tubing operation manual for minimum bending radius of tubing.

2) Mount to a flat surface.
Mounting on an uneven surface will apply excessive force to the housing and bracket, which may lead to damage or failure. Do not drop the product or subject it to a strong impact. This may cause an injury or accident.

3) Install the product so that the entire bar does not have an excessive deflection.
For a bar length of 820mm or more, support the bar at both ends and in the middle by using brackets (IZS40-BM). If the bar is held only at the both ends, self-weight of the bar causes deflection, resulting in damage to the bar.

4) Avoid using in a place where noise (electromagnetic wave and surge) is generated.
It may cause malfunction, deterioration or damage to internal components. Take measures to prevent noise at its source and avoid power and signal lines from coming into close contact.

5) Use a correct tightening torque.
If the screws are tightened in excessive of the specified torque range, it may damage the mounting screws, mounting brackets, etc. If the tightening torque is insufficient, the mounting screws and brackets may become loose.

6) Do not directly touch the emitters with your finger or tools.

Do not directly touch the emitter with your finger. If the emitter sticks to your finger, or electrical shock makes an instantaneous rapid body motion to escape from the shock, your body may touch the equipment around you, causing injury. If emitter or cartridge is damaged by tools, etc., it may interfere with the specified function and performance, and may also cause operation failure and accident.

High voltage caution

High voltage is applied to the emitters. Never touch the emitters. Inserting foreign matter into the cartridge or touching electrode may cause electrical shock and instantaneous rapid body motion to escape from the shock. Your body may then touch the equipment around you, causing injury.

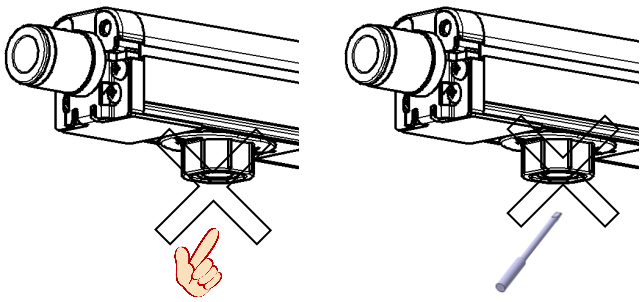

7) Do not adhere tape or sticker onto the product body.

If the tape or sticker contains conductive adhesive or reflective paint, it is possible that due to the dielectric effect, charge could build up causing an electro-static discharge or electrical leakage.

8) Be sure to remove power supply and air supply to the product before starting the product installation.

Caution

1) To prevent electric leakage, electric shocks, and other issues, be sure to secure a space of 10 mm or more in every direction around the product when installing it.

When there is a wall or an object within the area shown in the Fig. below, generated ions may not reach the workpiece effectively, resulting in deterioration of efficiency.

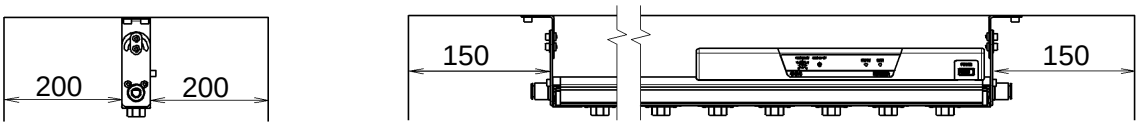

Unit: mm

2) Make sure to confirm the effect of static neutralization after installation.

The effect of the ionizer varies depending on the surrounding installation and operating conditions. Confirm the effect of static neutralization after installation.

3) When installing IZS41 or IZS42 in proximity with an ionizer which operates in DC mode, they should be positioned at least 2 meters away from each other.

When IZS41 or IZS42 is used close to an ionizer which operates in DC mode, separate the ionizers at least 2 meters.

Ion balance may not be adjusted by the internal sensor due to the ions which are discharged from the DC mode ionizer.

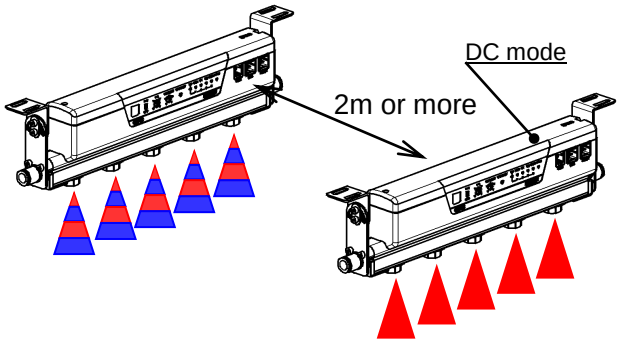

Wiring and Piping

Warning

1) Ensure that the power supply capacity is large enough, and that voltage is within specification before wiring.

2) To maintain product performance, a DC power supply shall be connected per UL listed Class 2 certified by National Electrical Code (NEC) or evaluated as a limited power source provided by UL60950.

3) To maintain the product performance, ground the product with an earth ground cable with a resistance of 100 ohm or less according to this manual.

4) Remove the power supply before wiring (including the connector plug in/out).
5) Use a cable with sensor for connection of the ionizer, feedback sensor or auto balance sensor (high accuracy type), and do NOT disassemble or retrofit.
6) Ensure the safety of wiring and surrounding conditions before supplying power.
7) Do not connect or disconnect the connectors (including power source) while the power is being supplied. The ionizer may malfunction.
8) Malfunctions induced by noise may occur if the wire is installed in the same route as that of power or high-voltage cable. Wire the ionizer independently.
9) Confirm that there is no error in wiring before operation. Incorrect wiring will lead to a malfunction or breakage of the product.
10) Flush the piping before connecting. Verify that all dust, moisture, oil, etc. are eliminated from the piping before connecting.

Operating and Storage Environment

⚠Warning

1) Operate the product in the specified fluid temperature range and ambient temperature range.

Fluid temperature and ambient temperature ranges are; 0 to 40 ºC for ionizer, 0 to 50 ºC for feedback sensor and auto balance sensor (high accuracy type), 0 to 40 ºC for AC adapter, and 0 to 45 ºC for remote controller. Avoid sudden temperature change even within specified temperature range, as it may cause condensation.

2) Do not use this product in an enclosed space.

This product utilizes the corona discharge phenomenon. Although the amount is very small, Ozone and NOx are generated. Do not use in an enclosed space.

This product complies with the maximum allowable concentration of ozone of 0.050 parts per million by volume (ppmv) in a 24-hour period. The Health Canada Guideline 2010 recommends that the maximum exposure limit, based on an averaging time of 8 hours, is 0.020 ppmv or less when tested in a sealed, controlled room approximately 30 m^3.

3) Environments to avoid

Never use or store under the following conditions, as these cause product failure.

a. Areas where ambient temperature exceeds the operating temperature range.
b. Areas Where ambient humidity exceeds the operating humidity range.
c. Areas where abrupt temperature changes may cause condensation.
d. Areas where corrosive gas, flammable gas or other volatile flammable substances are stored.
e. Areas where the product may be exposed to conductive powder such as iron powder or dust, oil mist, salt, organic solvent, machining chips, particles or cutting oil (including water and any liquids), etc.
f. Paths of direct air flow, such as air conditioners.
g. Enclosed or poorly ventilated areas.
h. Locations that are exposed to direct sunlight or heat radiation.
i. Areas where strong electromagnetic noise is generated, such as strong electrical and magnetic fields or supply voltage spikes.
j. Areas where the product is exposed to static electricity discharge.
k. Locations where strong high frequency is generated.
l. Locations that are subject to potential lightning strikes.
m. Areas where the product may be exposed to direct impact or vibration.
n. Areas where the product may be subjected to forces or weight that could cause physical deformation.

4) Do not use air containing mist and/or dust.

Air containing mist and/or dust may cause performance deterioration, and reduce the maintenance cycle.

Install a dryer (IDF series), air filter (AF/AFF series), or mist separator (AFM/AM series) to obtain clean compressed air (air quality of Class 2.6.3 or higher according to ISO 8573-1: 2010 is recommended for operation).

5) Ionizer, feedback sensor, auto balance sensor (high accuracy type), remote controller, and AC adapter are not resistant to lightening surge.

Maintenance and Inspection

⚠Warning

-RISK OF ELECTRIC SHOCK-

These servicing instructions are for use by qualified personnel only. To reduce the risk of electric shock, do not perform any servicing other than that contained in the operating instructions unless you are qualified to do so.

⚠ High voltage caution

A high voltage generating circuit is mounted onto this product. Make sure to check that the power supply is stopped when performing maintenance. Never disassemble or modify the product, as this can cause loss of product functionality, and there is also a risk of electric shock and earth leakage.

1) Perform maintenance regularly to keep the emitters clean.

Perform regular maintenance of the product to prevent undetected failures. The maintenance must be carried out by an operator who has sufficient knowledge and experience. If the product is used for an extended period of time with dust is present on the emitters, the product's ability to eliminate static electricity will be reduced. If the emitters become worn and the product's ability to eliminate static electricity is not restored after cleaning, replace the cartridge.

2) Make sure to remove power and air supply from the product before cleaning the emitters or replacing the cartridges.

If the emitters are touched while the product is energized, this may cause an electric shock or accident.

If an attempt to replace the cartridges is performed before removing air supply, the cartridges may eject unexpectedly due to presence of the supply air. Remove air supply before replacing the cartridges. If cartridges are not securely mounted to the bar, they may eject or release when air is supplied to the product. Securely mount or remove the cartridges referencing the instructions shown below.

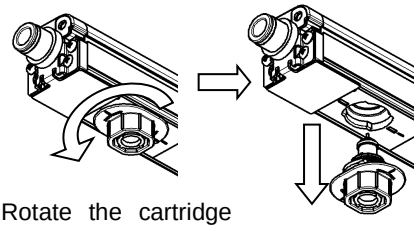

1) Rotate the cartridge 90 degrees in the counter-clockwise direction.

2) Pull to remove.

Removal of electrode cartridge

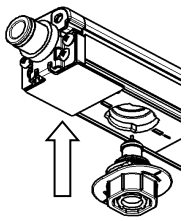

1) Insert the cartridge into the bar so that the longer side of the cartridge is mounted at a right angle to the bar.

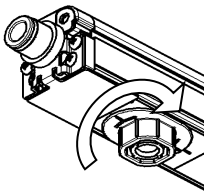

2) Rotate the cartridge 90 degrees in the clockwise direction, and match the markings on the bar to those on the cartridge and secure.

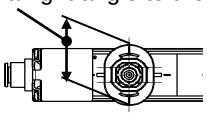

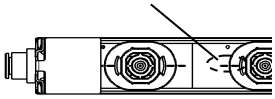

Mounting of electrode cartridge

3) Perform maintenance detection function without workpiece. (IZS41 and IZS42)

While maintenance detection function perform, ionizer discharges positive ions and negative ions for maintenance detection.

4) Do not disassemble or modify the product.

This may lead to accidents such as electric shock, failure, fire or etc. If the product is disassembled and/or modified, the functions and performance in the specifications may not be achieved and the product will not be guaranteed.

5) Do not operate the product with wet hands.

This may cause an electric shock or accident.

Handling

⚠Caution

1) Do not drop, hit or apply excessive shock (100m/s^2 or more) to the product.

Even if the ionizer body is not damaged, the internal components may be damaged, leading to a malfunction.

2) When installing the product, handle the product so that no moment is applied to the controller and the ends of the bar.

Handling the product by holding either end of the bar may cause damage to the product.

3) When connecting and disconnecting the cables, hold the claws of the plugs together with the plug bodies, and insert or pull out straight.

Connection and removal of the plugs with excessive force may damage the connecting parts and also cause malfunction.

1. How to Order

1-1. Ionizer

Type

40	Standard type

IZS 40 – 1600 □ □ – 10 B – □

IZS 42 – 1600 □ □ □ – 10 B □ – □

Bar type

Type

41	Feedback sensor type
42	Dual AC type

Made to Order

Sensor

Symbol	Sensor	IZS41	IZS42
Nil	Without sensor	●	●
F	Feedback sensor	●	–
G	Auto balance sensor [high accuracy type]	●	●

* Feedback sensor cannot be used for the IZS42.

Emitter cartridge type/ Materials

Symbol	Type	Material
Nil	High speed static neutralization cartridge	Tungsten
C		Silicon
J	Energy saving static neutralization cartridge	Tungsten
K		Silicon
V	Energy saving high-efficiency cartridge	Tungsten
S		Silicon

Bracket

Nil	Without bracket
B	With bracket *

* The number of intermediate brackets differ depending on the bar length. (Refer to the below table.)

Number of brackets

Bar length symbol	End bracket	Intermediate bracket
340 to 760	With 2 pcs.	None
820 to 1600		With 1 pc.
1660 to 2380		With 2 pcs.
2440 to 2500		With 3 pcs.

Bar length

Symbol	Bar length mm
340	340
400	400
460	460
580	580
640	640
820	820
1120	1120
1300	1300
1600	1600
1900	1900
2320	2320
2500	2500

Input/Output specifications

Nil	NPN
P	PNP

* Since input/output function cannot be used, specify "Nil" when the AC adapter is being used.

Power supply cable

Nil	With power supply cable (3m)
Z	With power supply cable (10m)
N	Without power supply cable

* When only an e-con connector for the IZS40 is required, specify "Nil", and order a part (Model: ZS-28-C) separately.
* To use AC adapter, specify "N", and select AC adapter sold separately (on page 427). (A cord is attached to the adapter.)

One-touch fitting

06	φ6 One-touch tube fitting
08	φ8 One-touch tube fitting
10	φ10 One-touch tube fitting

*Refer to the table below for selection of One-touch fittings.

Recommended piping port size

Emitter cartridge type	One-touch fitting symbol	Applicable tube O.D. mm	Bar length mm	
			Single end piping	Double ends piping
High speed static neutralization cartridge	06	φ6	340 to 640	340 to 1300
	08	φ8	340 to 1300	340 to 2500
	10	φ10	340 to 2500	340 to 2500
Energy saving static neutralization cartridge	06	φ6	340 to 1300	340 to 2500
	08	φ8	340 to 2500	340 to 2500
	10	φ10	340 to 2500	340 to 2500
Energy saving high-efficiency cartridge	06	φ6	340 to 2500	340 to 2500
	08	φ8	340 to 2500	340 to 2500
	10	φ10	340 to 2500	340 to 2500

*The ionizer has air supply port at the both ends.

Made to Order

symbol	Contents	Specifications
-X10	Non-standard bar length	Symbol for producible bar length: 460 + 60 x n (n: Integer from 1 to 34) (For 2, 3, 6, 11, 14, 19, 24, 31 and 34 for n, use a standard model.)

Ordering example)

IZS 40 – 1660 □ □ – 10 B – X10

IZS 42 – 1660 □ □ □ – 10 B □ – X10

Type

41
42

Bar length

520	1000	1420	1780	2140
700	1060	1480	1840	2200
760	1180	1540	1960	2260
880	1240	1660	2020	2380
940	1360	1720	2080	2440

Symbol	Contents	Specifications
-X14	Model with drop prevention cover	The main unit is shipped fitted with a drop prevention cover available as an option

1-2. Accessories

Emitter cartridge

(Common for IZS40, IZS41 and IZS42)

IZS40－N□

● **Emitter cartridge type/ Materials**

Symbol	Type	Material
T	High speed static neutralization cartridge	Tungsten
C		Silicon
J	Energy saving static neutralization cartridge	Tungsten
K		Silicon
V	Energy saving high-efficiency cartridge	Tungsten
S		Silicon

Cartridge color	Emitter material
White	Tungsten
Gray	Silicon

Tungsten
(Cartridge color: White)

Silicon
(Cartridge color: Gray)

Power supply cable

IZS□－CP□

● **Power supply cable length**

Nil	Full length 3m
Z	Full length 10m

● **Type**

40	For IZS40
41	For IZS41, IZS42

Made to Order

How to Order

IZS□－CP□-X13

Type ●

40	For IZS40
41	For IZS41, IZS42

● **Power supply cable length**

Symbol	Cable full length
01	Full length 1m
02	Full length 2m
⋮	
19	Total length 19m
20	Total length 20m

Model with Made-to-order power supply cable
Available in 1 m increments from 1 m to 20 m.
Note 1) 11 m or longer power cables are no CE Marking-compliant.
Note 2) Use standard power supply cables for 3 m and 10 m lengths.

Bracket (Common for IZS40, IZS41 and IZS42)

IZS40－B□

● **Bracket type**

E	End bracket
M	Intermediate bracket

* The number of intermediate brackets required as listed below, depends on the bar length. Two end brackets are always required regardless of the bar length.

Bar length symbol	End bracket	Intermediate bracket
340 to 760	2 pcs.	None
820 to 1600		1 pcs.
1660 to 2380		2 pcs.
2440 to 2500		3 pcs.

* The model number is for a single bracket.

End bracket

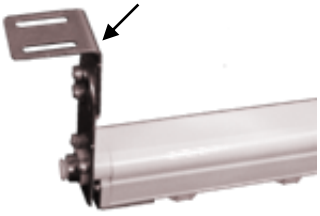

Intermediate bracket

External sensor (Common for IZS41 and IZS42)

IZS31 – D□

● Sensor type

F	Feedback sensor
G	Auto balance sensor [high accuracy type]

Note) External sensor cannot be used for IZS40.
Feedback sensor cannot be used for IZS42.

IZS31-DF

IZS31-DG

1-3. Option

Drop prevention cover (Common for IZS40, IZS41 and IZS42)

IZS40 – E□

● Number of fixed emitter cartridges

IZS40-E3	3
IZS40-E4	4
IZS40-E5	5

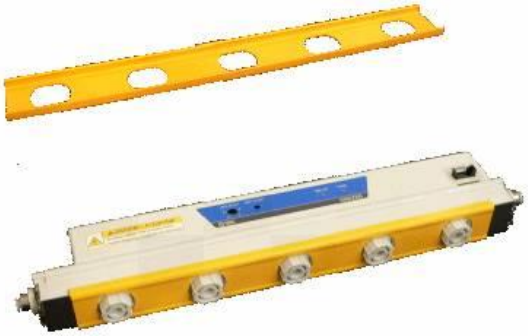

Image of the product mounted with the cover

Standard bar length

Bar length symbol	No. of drop prevention cover needed		
	IZS40-E3	IZS40-E3	IZS40-E3
340	-	-	1
400	2	-	-
460	1	1	-
580	-	1	1
640	-	-	2
820	1	-	2
1120	1	-	3
1300	2	-	3
1600	2	-	4
1900	2	-	5
2320	1	-	7
2500	2	-	7

Non-standard bar length

Bar length symbol	No. of drop prevention cover needed		
	IZS40-E3	IZS40-E3	IZS40-E3
520	1	-	1
700	2	-	1
760	1	1	1
880	-	1	2
940	-	-	3
1000	2	-	2
1060	1	1	2
1180	-	1	3
1240	-	-	4
1360	1	1	3
1420	1	-	4
1480	-	1	4

Non-standard bar length

Bar length symbol	No. of drop prevention cover needed		
	IZS40-E3	IZS40-E3	IZS40-E3
1540	-	-	5
1660	1	1	4
1720	1	-	5
1780	-	1	5
1840	-	-	6
1960	1	1	5
2020	1	-	6
2080	-	1	6
2140	-	-	7
2200	2	-	6
2260	1	1	6
2380	-	1	7
2440	-	-	8

AC adapter

AC adapter **for IZS40**

IZF10 – C□

● **AC adapter**

G1	AC adapter (AC cord attached)
G2	AC adapter (Without AC cord)

Note) AC cord is only for use in Japan. (Rated voltage 125V, plug JIS C8303, inlet IEC60320-C8)

AC adapter **for IZS41 and IZS42**

IZS41 – C□

● **AC adapter**

G1	AC adapter (AC cord attached)
G2	AC adapter (Without AC cord)

Note) AC cord is only for use in Japan. (Rated voltage 125V, plug JIS C8303, inlet IEC60320-C8)
External input and output cannot be used when the AC adapter is being used.

AC adapter

AC cord

Transition wiring cable (Common for IZS41 and IZS42)

IZS41 – CF□

● **Transition wiring cable**

02	Full length 2m
05	Full length 5m
08	Full length 8m

Note) Transition wiring is not possible for IZS40.

Made to Order

How to Order

IZS41 – CF□-X13

● **Transition wiring cable length**

Symbol	Cable full length
01	Full length 2m
02	Full length 3m
⋮	
19	Total length 19m
20	Total length 20m

Model with Made-to-order transition wiring cable
Available in 1 m increments from 1 m to 20 m.
Note 1) 11 m or longer power cables are not CE Marking-compliant.
Note 2) Use standard power supply cables for 2 m, 5 m and 8 m lengths.
Note 3) Transition wiring is not possible for the IZS40.

Remote controller (Common for IZS41 and IZS42)

IZS41－RC

Note) Remote controller cannot be used for IZS40.
(Batteries are not supplied.)
(2pcs. of AA A sized battery)

e-con connector (IZS40)
Connector used for IZS40.

ZS-28-C

Cleaning kit
(Common for IZS40, IZS41 and IZS42)

IZS30－M2

2. Installation

We recommend investigating environments where static neutralization is generated, as well as, processes and parts where static neutralization disturbance occur in advance. Verify that the required conditions have been met in order to effectively remove static neutralization before installation.

The effect of the ionizer varies depending on the surrounding installation and operating conditions. Confirm the effect of static neutralization after installation. (The same applies when the ionizer is moved and installed in a different location.)

2-1. Installation of ionizer

2-1-1. Selection of piping port size

When using the air purge function, ionizer piping port size should be selected depending on the bar length according to the ranges specified in the table below..

One-touch fittings are mounted to the piping ports of the ionizer at both ends of the bar. Connect piping for air supply through the One-touch fitting(s) either to one end or both ends, depending on the bar length.

If the ionizer is used outside of the specified range, static neutralization performance may be deteriorated.

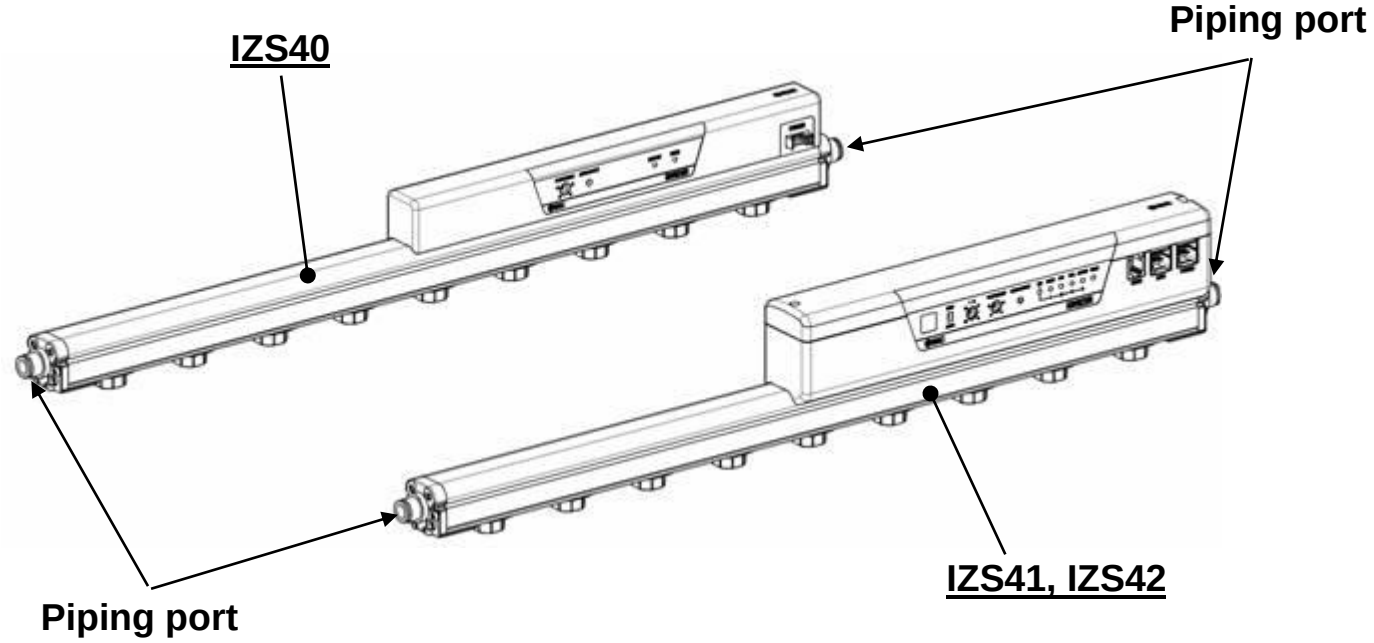

Recommended piping port size

Emitter cartridge type	One-touch fitting symbol	Applicable tube O.D. mm	Bar length mm	
			Single end piping	Double ends piping
High speed static neutralization cartridge	06	φ6	340 to 640	340 to 1300
	08	φ8	340 to 1300	340 to 2500
	10	φ10	340 to 2500	340 to 2500
Energy saving static neutralization cartridge	06	φ6	340 to 1300	340 to 2500
	08	φ8	340 to 2500	340 to 2500
	10	φ10	340 to 2500	340 to 2500
Energy saving high-efficiency cartridge	06	φ6	340 to 2500	340 to 2500
	08	φ8	340 to 2500	340 to 2500
	10	φ10	340 to 2500	340 to 2500

*The ionizer has air supply port at the both ends.

2-1-2. Distance for installation

Install the ionizer with the distance from the workpiece to be neutralized within the ranges specified in the table below.

	Model	Distance from the ionizer to the neutralized workpiece (mm)	Sensor installation distance
When the external sensor is not used	IZS40 IZS41 IZS42	50 to 2,000	–
When the feedback sensor is used	IZS41	200 to 2,000	Distance between neutralized workpiece and ionizer 10 to 50mm
When auto balance sensor (high accuracy type) is used	IZS41 IZS42	100 to 2,000	Distance between the ionizer and sensor 100 to 2000mm

Ion generation frequency (Hz)	Distance from the ionizer to the neutralized workpiece (mm)							
	IZS40/41				IZS42			
	Without air purge	With air purge			Without air purge	With air purge		
		Energy saving high-efficiency cartridge	Energy saving static neutralization cartridge	High speed static neutralization cartridge		Energy saving high-efficiency cartridge	Energy saving static neutralization cartridge	High speed static neutralization cartridge
0.1	-	-	-	-	100 to 175	50 to 1300	50 to 2000	50 to 2000
0.5	-	-	-	-	100 to 175	50 to 1300	50 to 2000	50 to 2000
1	300 to 500	300 to 1500	400 to 2000	600 to 2000	100 to 175	50 to 1300	50 to 2000	50 to 2000
3	300 to 400	300 to 1500	350 to 2000	500 to 2000	75 to 150	50 to 1200	50 to 2000	50 to 2000
5	300 to 400	300 to 1500	300 to 2000	400 to 2000	75 to 150	50 to 1200	50 to 2000	50 to 2000
8	300 to 350	300 to 1400	250 to 2000	300 to 2000	-	-	-	-
10	200 to 300	200 to 1400	200 to 2000	200 to 2000	75 to 150	50 to 1200	50 to 2000	50 to 2000
15	200 to 300	200 to 1400	150 to 2000	100 to 2000	50 to 125	50 to 1100	50 to 2000	50 to 2000
20	150 to 250	150 to 1300	100 to 2000	50 to 2000	50 to 125	50 to 1100	50 to 2000	50 to 2000
30	50 to 200	50 to 1300	50 to 2000	50 to 2000	50 to 125	50 to 1100	50 to 2000	50 to 2000

Note) The above mentioned distances are guidelines for installation of the ionizer. Confirm the static neutralization effect before installing.

Minimum installation height of the ionizer when using a feedback sensor (for IZS41) should be 200mm. Minimum installation height of the ionizer when using an auto balance sensor (high accuracy type, for IZS41 and IZS42) should be 100mm. When operating the product outside of these conditions, confirm the proper operation of the sensor.

2-1-3. Mounting and installation of the bracket

1) End bracket

Mount an end bracket to both ends of the ionizer body using the M4 screws supplied as accessories.

Tightening torque: 1.3 to 1.5Nm

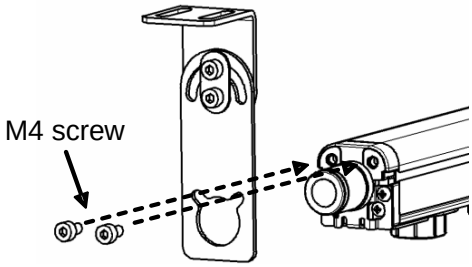

2) Intermediate bracket (for bar lengths of 820mm or more)

Match the groove of the ionizer body and protrusion of the intermediate bracket, and slide the bracket from the end of the ionizer body. Intermediate brackets should be mounted at the same intervals.

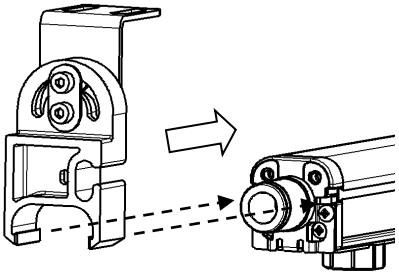

3) Installation of the ionizer (when using brackets)

Tap (M5) screws at the bracket mounting positions for installation of the ionizer and fix the ionizer body and brackets with M5 screws.

IZS40 and IZS41 are constructed such that the brackets at the bracket mounting positions on both ends of the bar are shared with F.G. Use caution to avoid short-circuit with the +24V power supply when installing and supplying power.

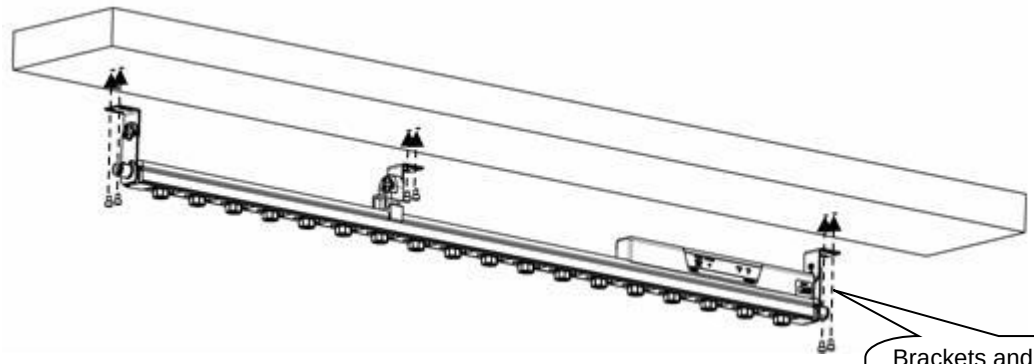

Brackets and the bracket mounting parts for IZS40 and IZS41 are shared with F.G.

4) Mounting angle adjustment

Adjust the angle of the ionizer body for effective static neutralization and fix the ionizer with the rotating set screw (M4) at each bracket.

End bracket tightening torque: 1.3 to 1.5 Nm
Intermediate bracket tightening torque: 0.73 to 0.75Nm

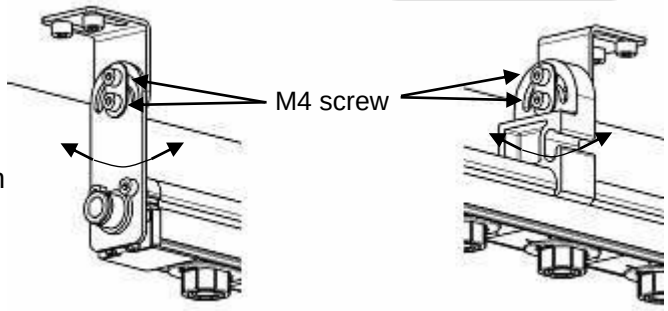

End bracket

Intermediate bracket

2-2. Installation of the external sensor

Feedback sensor and auto balance sensor (high accuracy type) are available for the external sensor.
External sensor cannot be used for some ionizer models.

IZS40: No external sensor shall be used.
IZS41: Feedback sensor and auto balance sensor (high accuracy type) may be used.
IZS42: Auto balance sensor (high accuracy type) may be used.

1) Installation of sensor head

<Feedback sensor>

Install the product in a place where the detection hole of the sensor head will aim at the workpiece. Distance from the detection hole and surface of the workpiece is recommended to be 10 to 50mm. The sensor head should be installed at a distance that prevents static electricity from being discharged over the sensor head. (Sensor head may be damaged if static electricity is discharged over the sensor head.) Also, the ionizer should be installed in a location where it will not be in contact with the workpiece. Detection area depends on the installation distance.

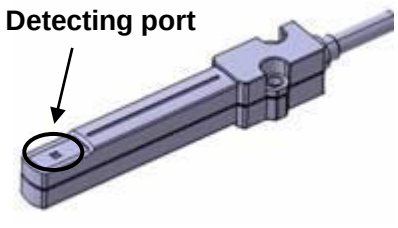

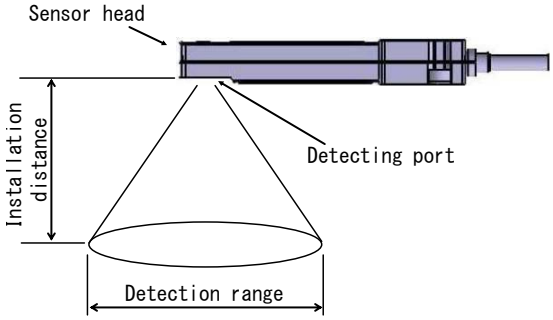

Installation distance mm	Detection range mm
10	45
25	100
50	180

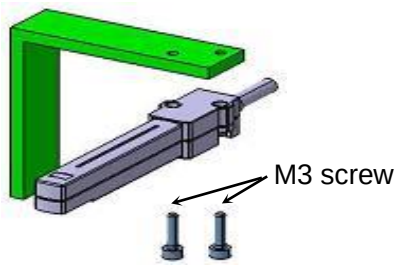

Mount the sensor head using two M3 screws (not supplied with the product).

The sensor structure has a sensor head case shared with 0 V. Use caution to avoid short circuit +24V power supply when installing and/or supplying power.

The detecting port is open to detect static electricity. If foreign matter, etc. enters the port or the hole touches a tool, damage to or malfunction of the sensor may be caused disabling correct detection of static electricity. Attention should be paid to prevent foreign matters from entering the port or the inside of the tool being touched.

Do not pull the cable connected to the sensor head. Pulling the cable with excessive force may cause the sensor head breakage or wire breakage.

When installing a feedback sensor, keep the sensor away from walls, etc.

The charge potential may not be detected correctly if anything such as a wall exists around the sensor.

Unit: mm

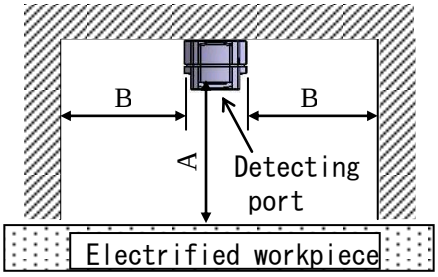

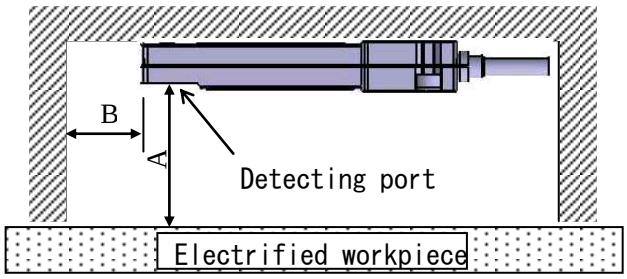

A	B
10	20
20	40
25	45
30	55
40	65
50	75

<Auto balance sensor (high accuracy type)>

Mount a metal plate directly beneath the ionizer so that the metal plate faces the ionizer. Offset voltage may vary depending on the installation environment. Install the auto balance sensor at the same level as the workpiece. The recommended distance between the auto balance sensor (high accuracy type) and the ionizer is 100 to 2000mm.

Mount the sensor head using two M3 screws (not supplied with the product).

Do not pull the cable connected to the sensor head. Pulling the cable with excessive force may cause sensor head breakage or wire breakage.

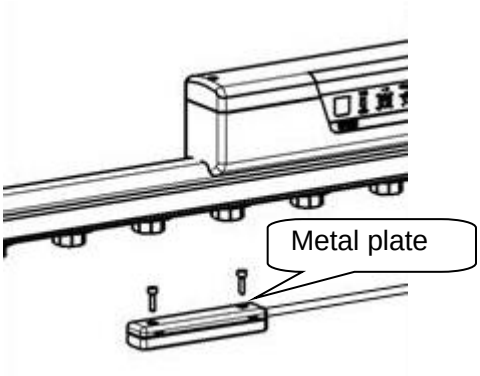

2) Installation of sensor amplifier

Mount the sensor amplifier using two M3 screws (not supplied with the product).

Do not pull the cable connected to the sensor amplifier. Pulling the cable with excessive force may cause sensor amplifier breakage or wire breakage.

Be certain to ground the sensor amplifier case with a resistance of 100 ohms or less. As the external surface of the sensor amplifier case is plated with conductive substance, F.G. wiring is not necessary if the sensor amplifier is mounted to equipment which is grounded with a resistance of 100 ohms or less. When the mounting surface is insulated with painting or insulation process, etc., connect wiring and make sure to **ground with a resistance of 100 ohms or less.**

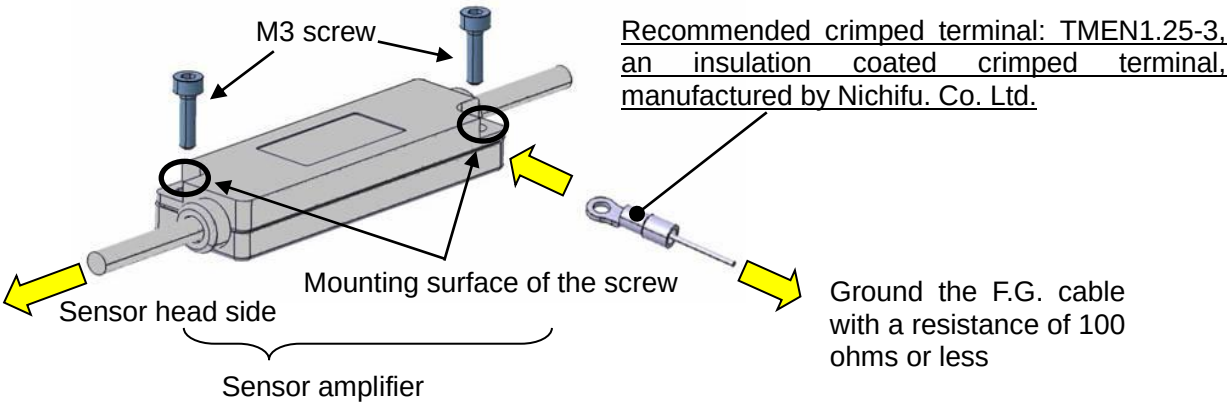

2-3. Routing of cables

Consider the minimum bending radius of the cables and avoid bending the cables at an acute angle to eliminate unreasonable Stress to the mounting parts of the connectors. Position the cables within close proximity of each other to prevent undue stress.

[Minimum bending radius] Power supply cable: 38mm Transition wiring cable: 38mm
Sensor cable: 25mm

Note) This is the minimum bend radius at 20°C. If the installation is at a lower temperature, the radium will be higher. When the cables are bent at a lower temperature than 20 °C, it may cause unreasonable force to be applied to the connectors.

1) Power supply cable

This cable supplies power to the ionizer and external equipment used to control the ionizer. (IZS40 has no input/output functions.)

Insert the plug of the power supply cable into the modular jack indicated with "POWER".

When connecting and disconnecting the power supply cable, hold the claws of the plugs together with the plug bodies, and insert or pull out straight. Connection and removal of the plugs with excessive force may damage the connecting parts and possibly cause malfunction.

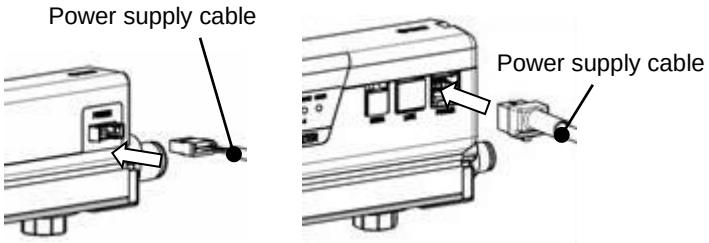

IZS40 IZS41, 42

Hold the cable with a tie-band at a position close to the joint to avoid applying unreasonable force to the plug.

Connect the lead wires according to the wiring diagram. Unused wires should be cut short or insulated using plastic tape.

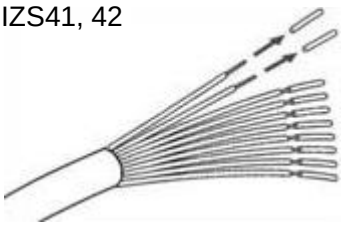

2) Transition wiring cable (Transition wiring is not possible with IZS40.)

This cable is used for connection between ionizers.

When connecting and disconnecting the transition wiring cables, hold the claws of the plugs together with the plug bodies, and insert or pull out straight. Connection and removal of the plugs with excessive force may damage the connecting parts and also cause malfunction.

For transition wiring, connect the "LINK" connector on the ionizer side, to which power is supplied, to the "POWER" connector of the ionizer to be added with the transition wiring cable.

The "LINK" connector has a dust cover. Remove this cover before connecting the cable. Refer to the Chapter 2-4," Transition wiring of ionizer" for details.

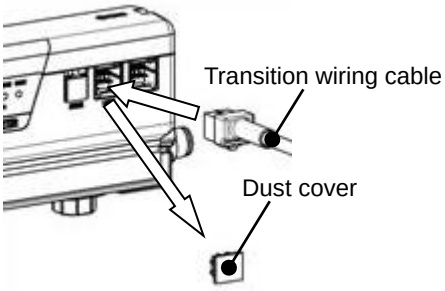

3) Sensor cable (Sensor may not be connected to IZS40)

When connecting a feedback sensor (connectable to IZS41) or auto balance sensor (high accuracy type, connectable to IZS41 and IZS42), remove the dust cover of the modular jack labeled "SNSR", and insert the modular plug of the sensor cable. When the modular plug is properly connected, the lever locks in and makes an audible locking sound.

Hold the cable with a tie-band at a position close to the joint to avoid unreasonable force being applied to the modular jack and plug.

When connecting and disconnecting the sensor cable, hold the claws of the plugs together with the plug bodies, and insert or pull out straight. Connection and removal of the plugs with excessive force may damage the connecting parts and also cause malfunction.

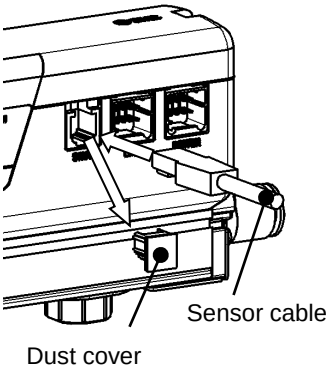

2-4. Transition wiring of ionizer

For transition wiring of ionizers, use a transition wiring cable for connection between ionizers. Use a power supply cable for connection between ionizer and power supply or external equipment. (Transition wiring is not possible with IZS40.)

The number of ionizers that may be connected using transition wiring varies depending on the power supply cable; the length of the transition wiring cable; the use of external sensor(s) and/or models. Refer to the table shown below "Connectable number of ionizers with transition wiring".

IZS41 and IZS42 can be connected in the same transition wiring, but mixed wiring of the NPN and PNP I/O specifications is not possible.

Contact SMC when connecting conditions other than specified in the table below are applied.

No. of IZS41 ionizers connectible in a transition wiring (without external sensor)

Symbol for bar length	Power supply cable length: 3m										Power supply cable length: 10m									
	Transition wiring cable length (same cable length) m										Transition wiring cable length (same cable length) m									
	1	2	3	4	5	6	7	8	9	10	1	2	3	4	5	6	7	8	9	10
340	8pcs.						5pcs.		4pcs.			7pcs.								
400													6pcs.							
460				7pcs.																
580											8pcs.									
640																				
820														5pcs.				4pcs.		
1120				6pcs.																
1300			7pcs.									6pcs.								
1600																				
1900											7pcs.									
2320																			3pcs.	
2500																				

No. of IZS42 ionizers connectible in a transition wiring (without external sensor)

Symbol for bar length	Power supply cable length: 3m										Power supply cable length: 10m									
	Transition wiring cable length (same cable length) m										Transition wiring cable length (same cable length) m									
	1	2	3	4	5	6	7	8	9	10	1	2	3	4	5	6	7	8	9	10
340																				
400																				
460																				
580																				
640																				
820			5pcs.					4pcs.			5pcs.			4pcs.				3pcs.		
1120																				
1300																				
1600																				
1900																				
2320																				
2500									3pcs.											

It is recommended that the power supply used to operate the ionizers have a current capacity twice that of the total current consumption of the ionizers to be used. Power supply voltage should be from 24 to 26.4 VDC.

AC adapter must not be used when ionizer is used in a transition wiring.

When ionizers are connected in a transition wiring, the same input signal serves as input to all the ionizers. When a signal is output from at least one ionizer in the connection, the signal will be output from the power supply cable.

Connect the power supply cable to the "POWER" connector of the 1st ionizer, and connect the "LINK" connector of the 1st ionizer to the "POWER" connector of the 2nd ionizer with a transition wiring cable. Follow the same procedure to connect subsequent ionizer(s) and after with transition wiring cables.

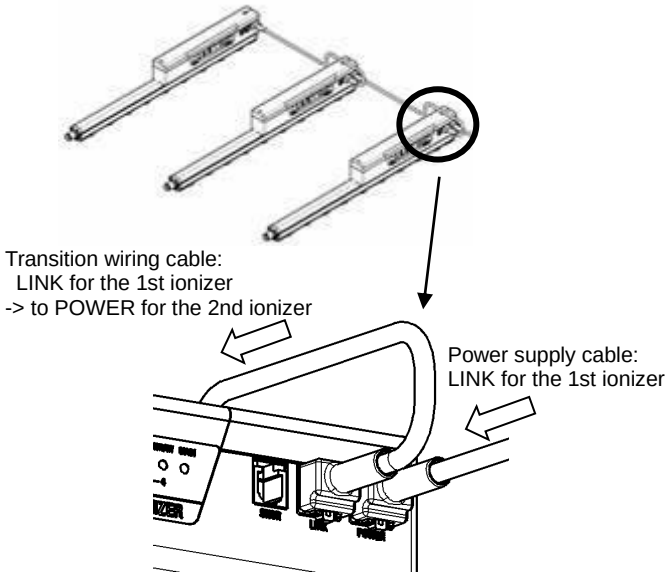

3. Descriptions and Functions of the Panel

IZS40

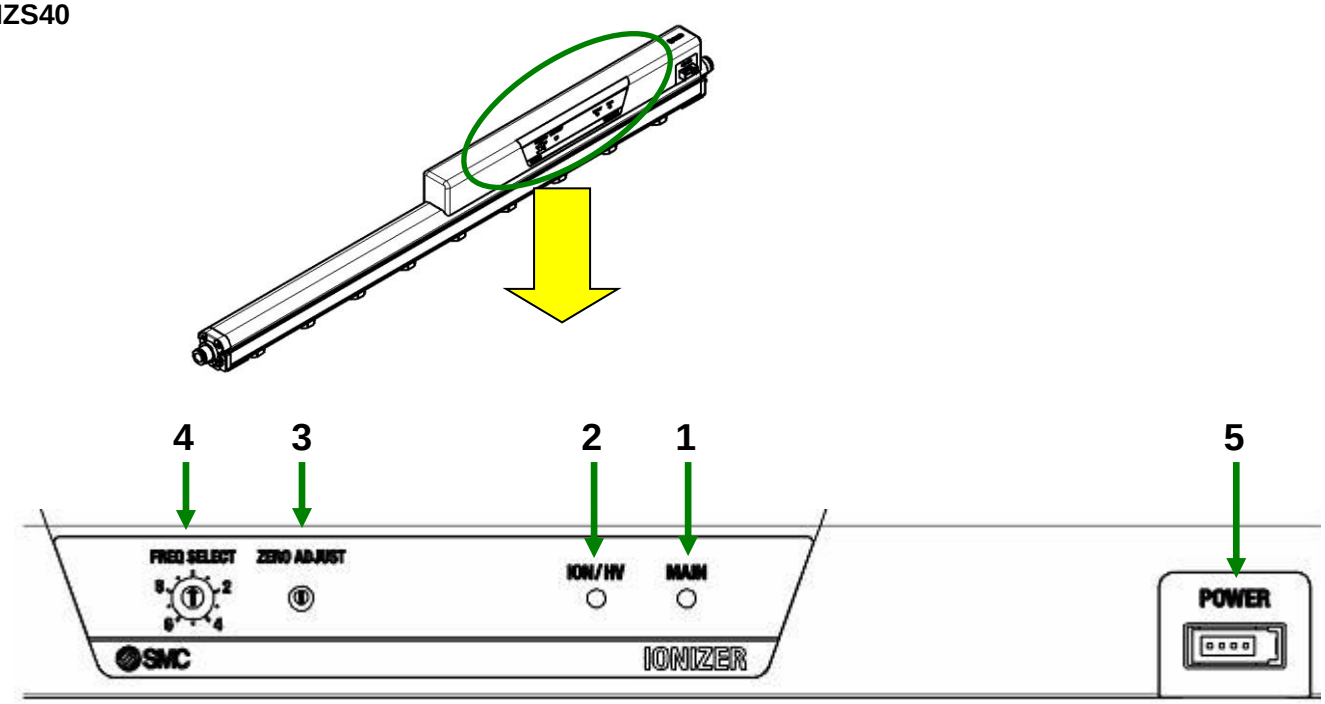

NO.	Description	Panel indication	Type	Operation
1	Power supply LED	MAIN	LED (Green)	Turns ON when power is supplied, and blinks when power supply voltage failure or CPU operation failure.
2	Ion discharge/ Incorrect high voltage LED	ION/HV	LED (Green)/ LED (Red)	Turns ON (green) when ions are discharged, and blinks (red) when incorrect ion discharge.
3	Offset voltage adjustment	ZERO ADJUST	Trimmer	Used for offset voltage adjustment. Rotating this trimmer in clockwise direction increases positive ions, and rotating it in counter-clockwise direction increases negative ions.
4	Frequency Set Switch	FREQ SELECT	Rotary switch	Used to set ion generating frequency.
5	Power supply connector	POWER	Connector (e-con)	Used to supply power for ionizer operation and to connect grounding to obtain reference potential.

IZS41, IZS42

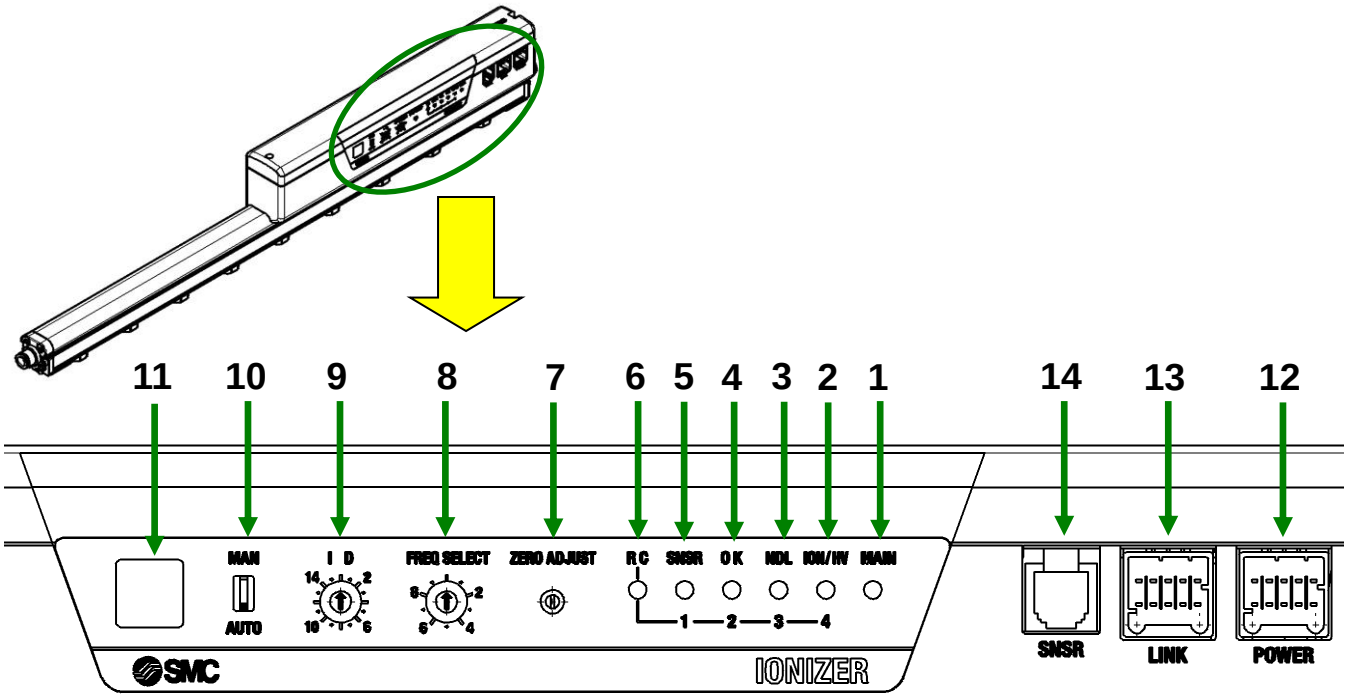

NO.	Description	Panel indication	Type	Operation
1	Power supply LED	MAIN	LED (Green)	Turns ON when power is supplied, and blinks when power supply voltage failure or CPU operation failure.
2	Ion discharge/ Incorrect high voltage LED	ION/HV	LED (Green)/ LED (Red)	Turns ON green when ion discharge, blinks green when overcurrent output, and turn ON red when incorrect ion discharge. Blinks red when CPU operation failure as well.
3	Maintenance LED	NDL	LED (Green)	Turns ON when contamination is detected on the electrode needle. Blinks when CPU operation failure while contamination is being detected.
4	Balance complete LED	OK	LED (Green)	Turns ON when offset voltage adjustment is completed in the manual operation mode, or when the ionizer is operating with the data adjusted by the manual operation. Blinks during offset voltage adjustment. It also blinks when the ionizer fails to adjust the offset voltage in the manual operation mode, as well as the maintenance LED turns ON and the maintenance output turns ON. It also blinks when CPU
5	Sensor LED	SNSR	LED (Green)/ LED (Red)	Turns ON green when feedback sensor or auto balance sensor is connected correctly, and turns ON red when there is any problem. It also blinks red when CPU operation failure.
6	Remote controller enable LED	RC	LED (Green)	Turns ON when remote controller setting is enabled, turns OFF when it is disabled, and blinks when a signal is received. It also blinks when CPU operation failure.
7	Offset voltage adjustment	ZERO ADJUST	Trimmer	Used for offset voltage adjustment. Rotating this trimmer in clockwise direction increases positive ions, and rotating it in counter-clockwise direction increases negative ions.
8	Frequency Set Switch	FREQ SELECT	Rotary switch	Used to set ion generating frequency.
9	ID number set switch	ID	Rotary switch	When remote controller is used for more than one ionizer, use this switch to set an ID number to identify each ionizer. (16 ionizers maximum can be identified.)
10	Operation Mode Set Switch	MAN/AUTO	DIP switch	Sets either manual operation mode (set to MAN) or automatic operation mode (set to AUTO) using auto balance sensor.
11	Receiving part of the remote controller	—	—	Receives infrared rays output from the remote controller (option).
12	Power supply connector	POWER	Connector	It is equipped with input/output ports to be connected to the ionizer for power supply, grounding and controlling ionizer.
13	LINK connector	LINK	Connector	Connector for transition wiring of ionizer.
14	Sensor connection	SNSR	Modular connector	Connects a modular plug of feedback sensor or auto balance sensor. (Feedback sensor can be connected only to IZS41.)

4. Wiring of Cables

Wire cables according to the circuitry and wiring chart.

4-1. Grounding of F.G. cable

Make sure to **ground the F.G. cable (green) with a resistance of 100 ohms or less.**

The F.G. cable is used as a reference electric potential for static neutralization. If the ground terminal F.G. is not grounded, the ionizer will not be able to achieve the optimal offset voltage.

4-2. Grounding during operation in DC mode

Applicable models: IZS40 and IZS41

When an ionizer is used in DC mode, make sure to ground the F.G. cable (green) and 0 V cable (blue) of the input power supply **with a resistance of 100 ohms or less.** Without grounding the F.G. terminal, the ionizers and/or power supply may be damaged.

4-3. Circuit ("POWER" connector)

4-3-1. Wiring of IZS40

e-con is adopted for the connector of IZS40. Connector with cable or without cable maybe selected when placing an order for the power supply cable.

When only an e-con is required, place an order for it as a part. Cable is not supplied.)

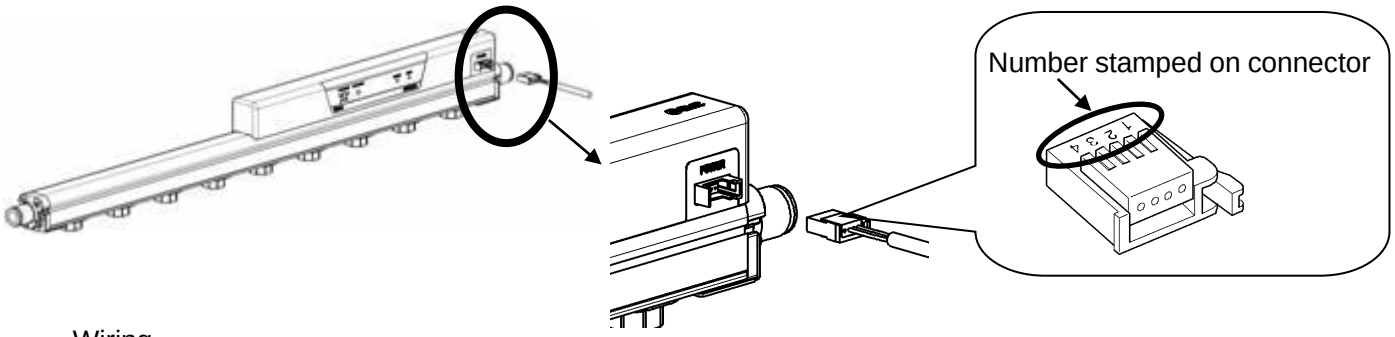

Wiring

Number stamped on connector	Signal name	Description
1	+24 VDC	Power supply is connected to operate the ionizer.
2	0 V	
3	F.G.	Make sure to ground with a resistance of 100 ohms or less to use it as a reference electric potential for ionizer.
4	—	Unused

How to connect the cable of the connector

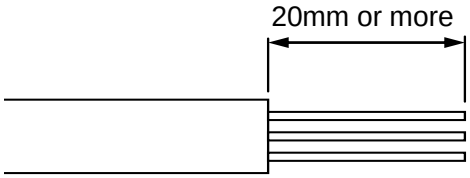

1) Cut the cable as shown in the Figure to the right.

Refer to the following table for the applicable wire size.

Applicable wire

AWG No.	Conductor cross section mm^2	Finish O.D. mm	Model
26-24	0.14-0.2	ϕ0.8-ϕ1.0	ZS-28-C

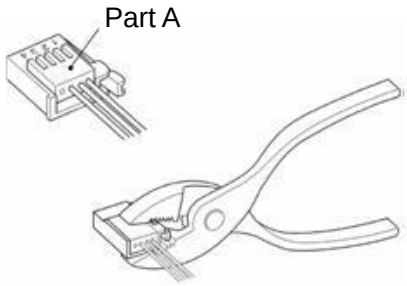

2) Insert the cable which was cut into the back of the connector.

3) Confirm that the cable is inserted into the back of the connector and press part A with your finger to hold tentatively.

4) Use a tool such as pliers to firmly tighten the center of Part A.

5) The connector cannot be reused once crimped. If cable insertion fails, use a new connector.

Ionizer (IZS40)

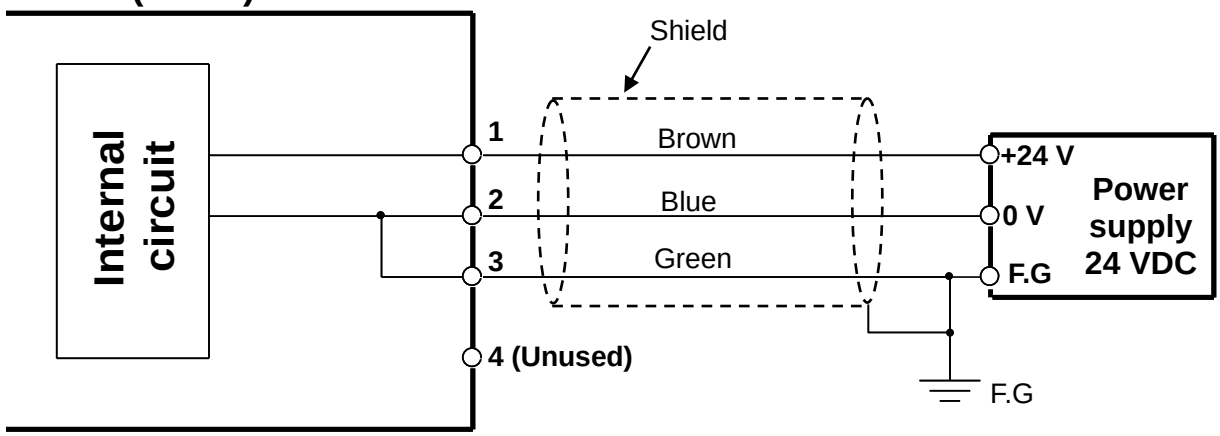

When an ionizer is used in DC mode, make sure to ground the F.G. cable (green) and 0 V cable (blue) of the input power supply **with a resistance of 100 ohms or less.** Without grounding the F.G. terminal, the ionizers and/or power supply in connection may be damaged.

If cables are prepared by the user, the cable colors shown in the diagram may change according to the cable colors by the user.

4-3-2. Wiring of IZS41 and IZS42

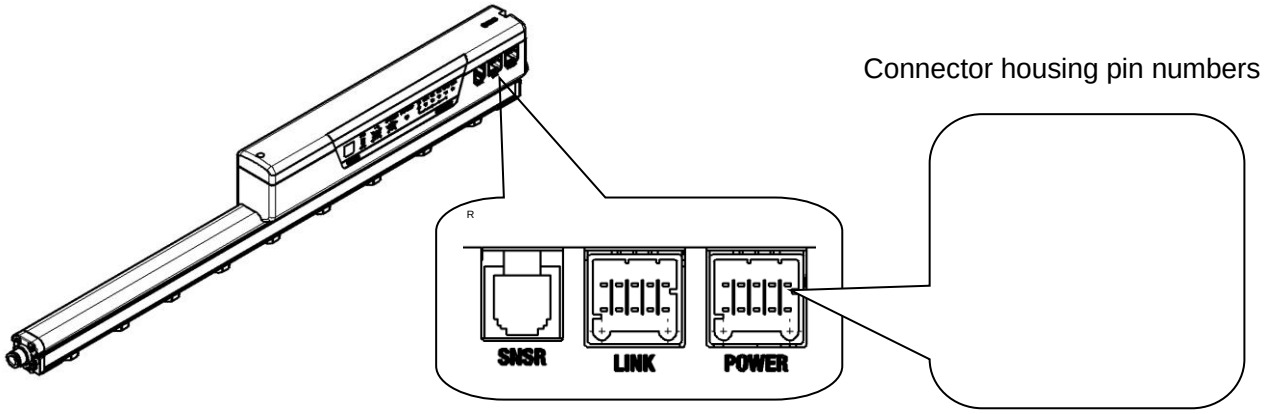

Wiring

Pin no.	Cable color	Description	Signal direction	Description
A1 B1	Brown	+24 VDC	IN	Power supply is connected to operate the ionizer.
A2 B2	Blue	0 V	IN	
A3	Green	F.G.	-	Make sure to ground with a resistance of 100 ohms or less to use it as a reference electric potential for ionizer. If not grounded, performance cannot be acquired, and also causes failure of the equipment.
B3	Light green	Discharge stop signal	IN	Signal input to turn ON/OFF the ion discharge. NPN specification: Stops ion discharge by connecting to 0 V. (Starts discharging ion when disconnected.) PNP specification: Stops ion discharge by connecting to +24 VDC. (Starts discharging ion when disconnected.)
A4	Gray	Maintenance detection signal	IN	Input signal when determining the necessity of emitter maintenance.
B4	Yellow	Maintenance detection signal	OUT (Contact point A)	Turns ON when emitter needs cleaning.
A5	Purple	Error signal	OUT (Contact point B)	Turns OFF when power supply failure, ion discharge error, connected sensor failure, or CPU operation failure. (ON when there is no problem.)
B5	White	Unused	-	—

1) NPN type

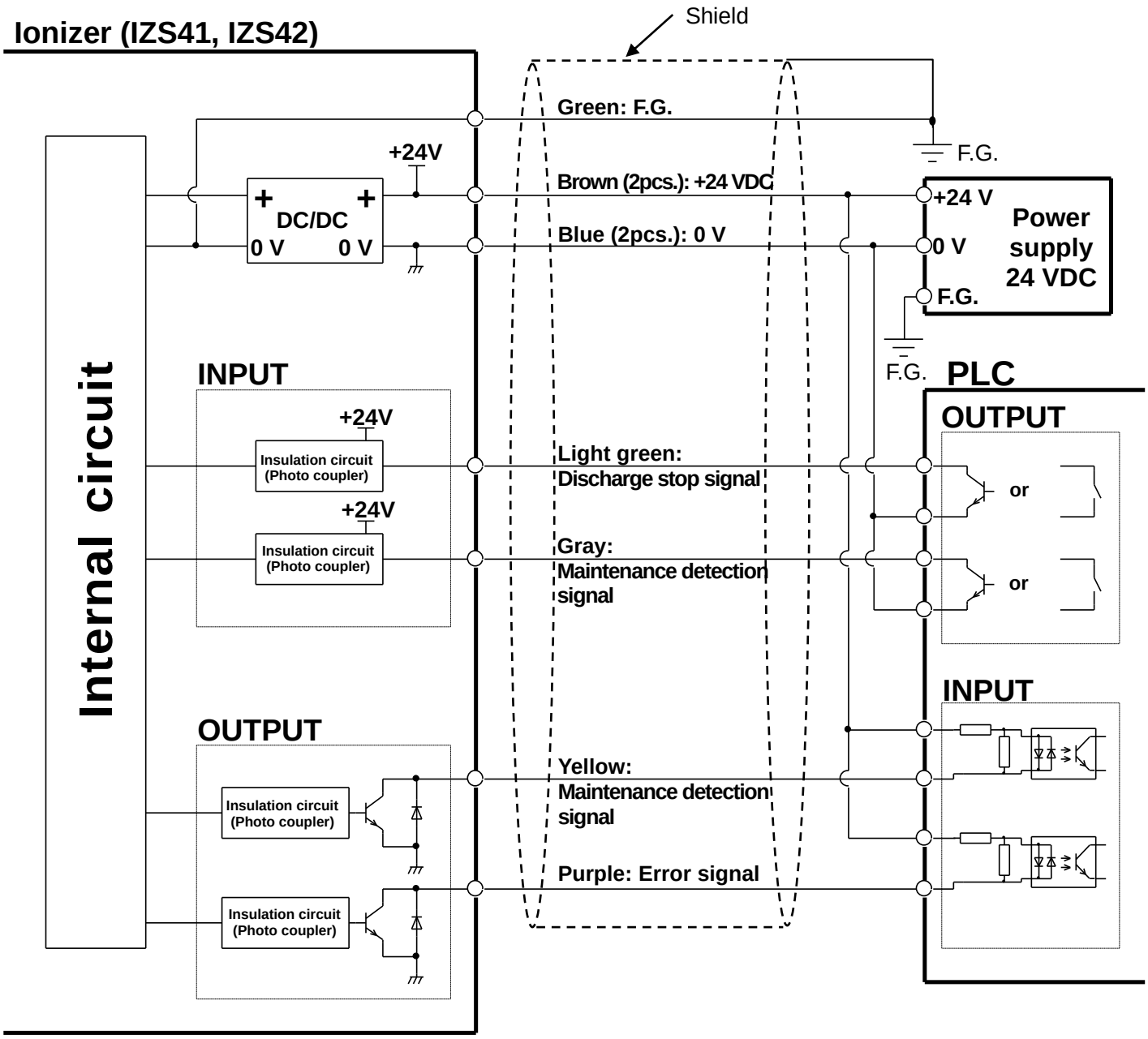

When an ionizer (IZS41) is used in DC mode, make sure to ground the F.G. cable (green) and 0 V cable (blue) of the input power supply **with a resistance of 100 ohms or less.** Without grounding the F.G. terminal, the ionizers and/or power supply in connection may be damaged.

2) PNP type

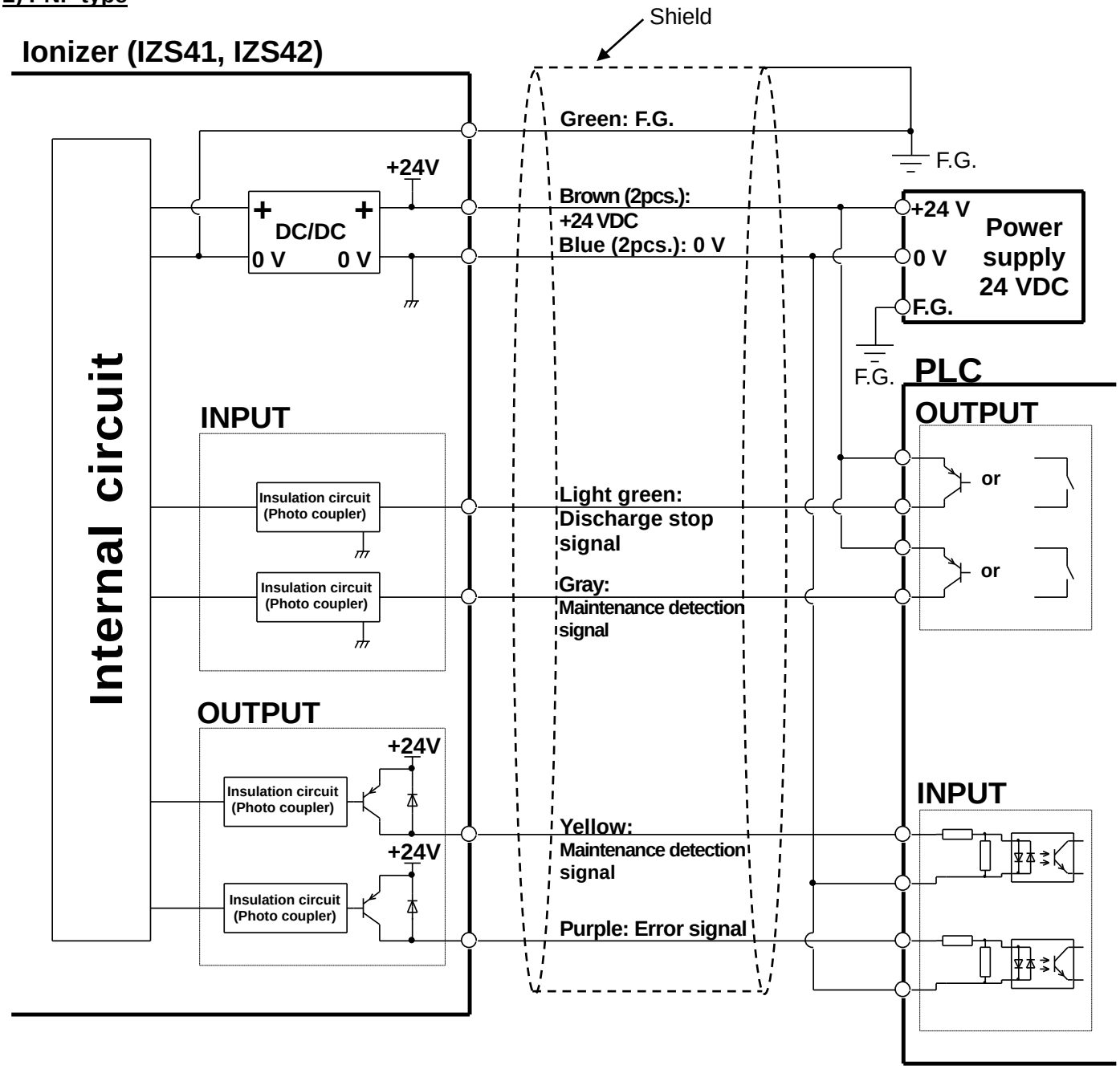

When an ionizer (IZS41) is used in DC mode, make sure to ground the F.G. cable (green) and 0 V cable (blue) of the input power supply **with a resistance of 100 ohms or less.** Without grounding the F.G. terminal, the ionizers and/or power supply in connection may be damaged.

4-4. Timingchart

4-4-1.IZS40

1) During operation

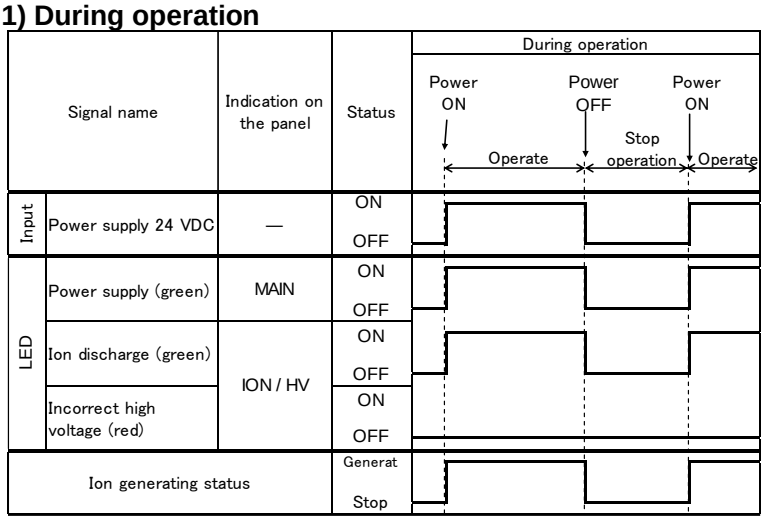

2) When abnormality occurs

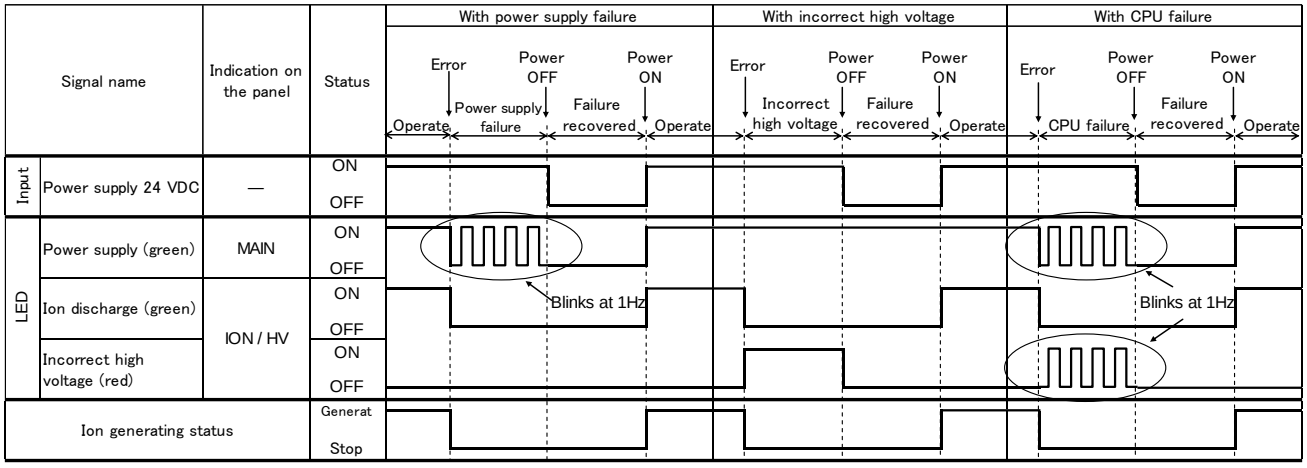

4-4-2. IZS41, IZS42

1) During operation using internal sensor or feedback sensor, During automatic operation using auto balance sensor (high accuracy type), During maintenance detection operation (when maintenance signal is ON)

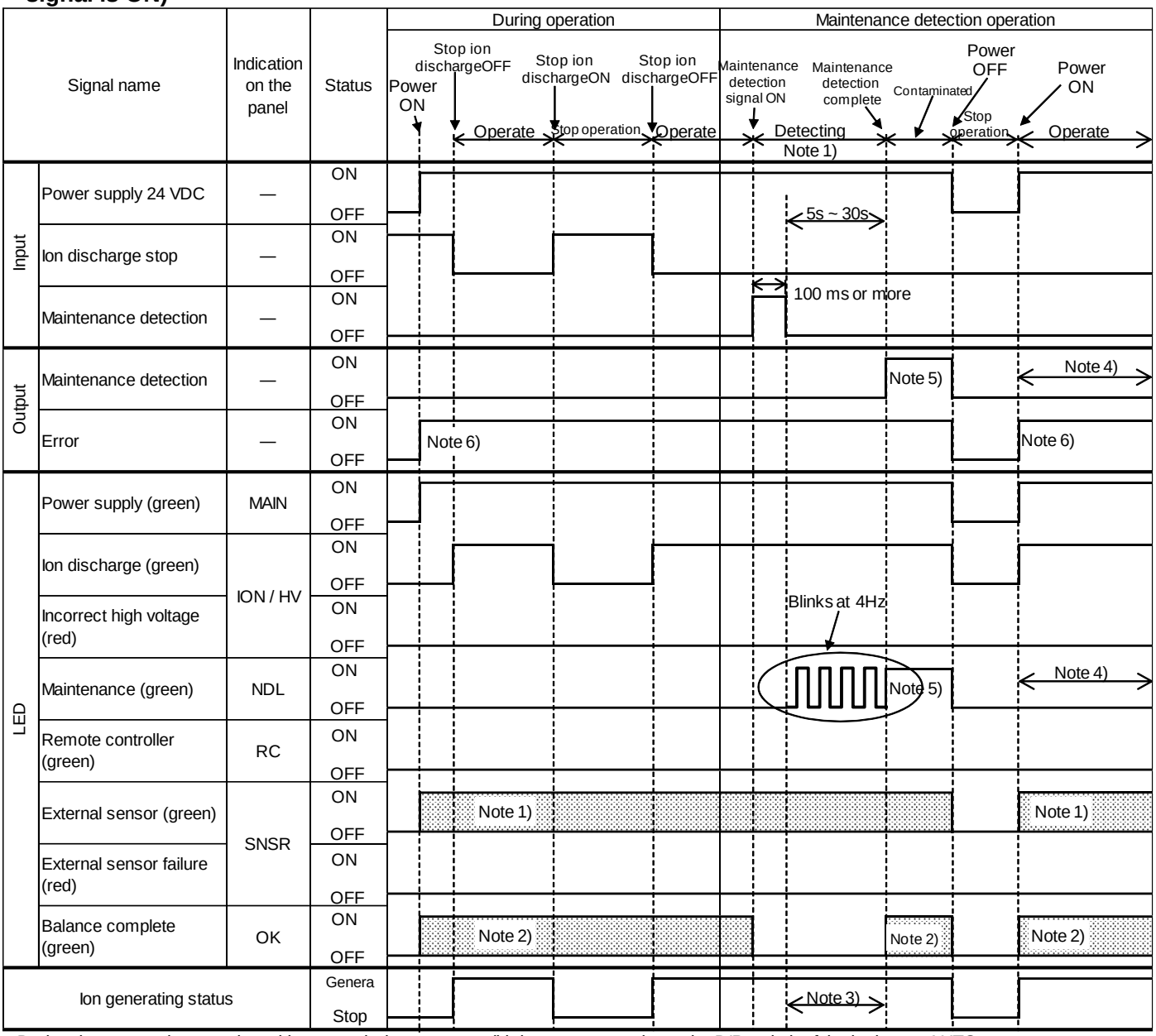

- During the automatic operation with an auto balance sensor (high accuracy type), set the DIP switch of the ionizer to AUTO.
- When an external sensor is connected, the offset voltage adjusting trimmer of the ionizer is disabled

Note 1) When an external sensor is connected, green LED of SNSR turns ON, and it turns OFF when disconnected.

Note 2) In the sensing AC mode using a feedback sensor, the OK LED turns ON when the offset voltage is within the range of +/- 30V, and it blinks when the offset voltage is within the range between +/- 30V and +/- 300V at 4Hz. The OK LED turns ON when the offset voltage is within +/- 30V during the automatic operation using an auto balance sensor (high accuracy type).
If the offset voltage cannot be adjusted to be within ±30V, both the maintenance LED and maintenance detection output signal turn ON.

Note 3) As Maintenance detection is detected with positive and negative ions discharged, perform the detection without any workpiece.

Note 4) Maintenance detection output ON is cleared and the maintenance LED turns OFF by re-supplying power. To perform maintenance detection again, input the maintenance detection signal.

Note 5) When contamination is detected, the maintenance detection output and maintenance LED turn ON, and when no contamination is detected, the maintenance detection output and maintenance LED turn OFF.

Note 6) There is a delay of approx. 500ms after power is supplied until a valid signal is output.
When using the output signal(s) with a PLC, do not perform any signal processing for a minimum of 1 second after supplying power to the ionizer.

2) During manual operation

Manual operation is an operation mode that is enabled when the Operation Mode Set Switch is set to MAN with the auto balance sensor (high accuracy type) connected.

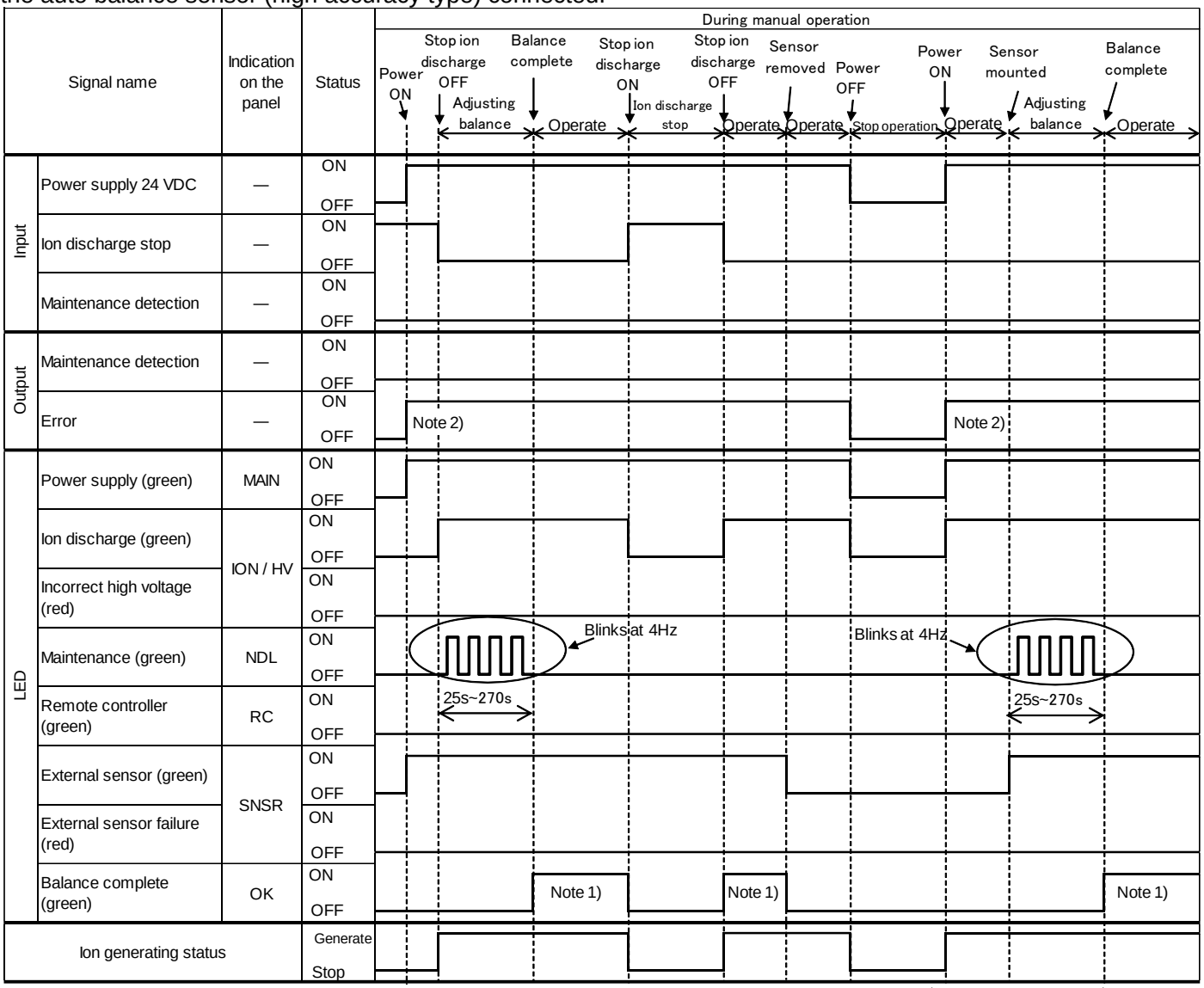

- For manual operation, set the DIP switch of the ionizer to MAN, and connect an auto balance sensor (high accuracy type).
- During manual operation, offset voltage adjustment of the ionizer is disabled.
- The offset voltage adjusting trimmer of the ionizer is enabled when the DIP switch of the ionizer is set to AUTO without connecting any external sensor.

Note 1) LED turns ON when offset voltage is within +/− 30 during the manual operation.

Note 2) There is a delay of approx. 500ms after power is supplied until a valid signal is output.
When using the output signal(s) with a PLC, do not perform any signal processing for a minimum of 1 second after supplying power to the ionizer.

3) At abnormal power supply, abnormal high voltage, over current with output circuit

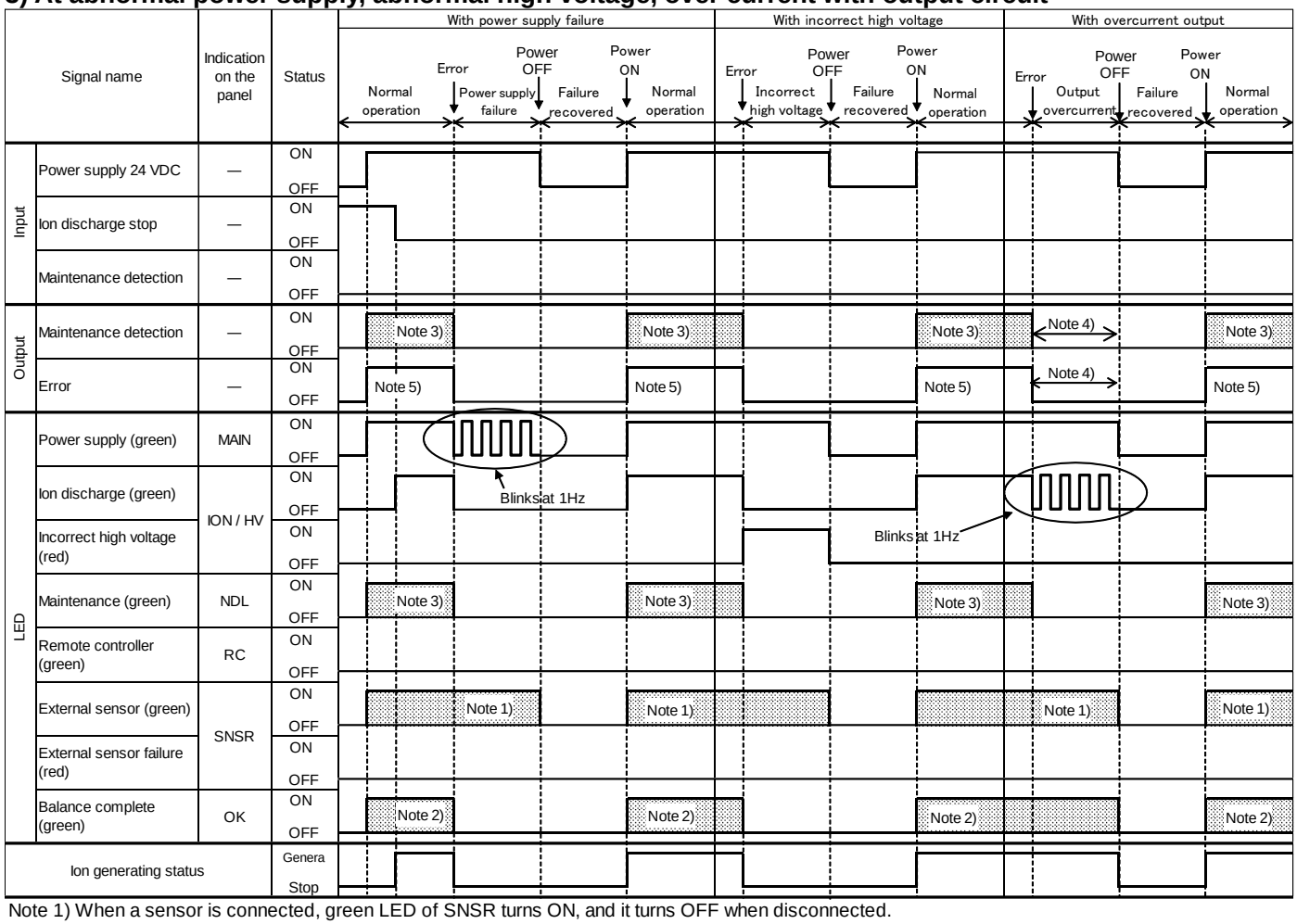

Note 1) When a sensor is connected, green LED of SNSR turns ON, and it turns OFF when disconnected.

Note 2) When static neutralization is completed in the sensing AC mode with a feedback sensor, or when the ionizer is operating in the automatic operation mode or in a manual operation mode with an auto balance sensor (high accuracy type), the OK LED turns ON when the offset voltage is less than +/- 30V, and the OK LED turns OFF when the feedback sensor or an auto balance sensor (high accuracy) is not connected. In the sensing AC mode using a feedback sensor, the OK LED turns ON when the offset voltage is within +/- 30V, and it blinks at 4Hz when the offset voltage is within the range of +/- 30V and +/- 300V. In the automatic operation mode and manual operation mode using an auto balance sensor (high accuracy type), the OK LED turns ON within the ion balance of +/- 30V.

Note 3) When emitter is still contaminated after operating the maintenance detection, the maintenance detection output and maintenance LED turn ON, and when the emitter is not contaminated after the maintenance detection, the maintenance detection output and maintenance LED turn OFF. When it fails to adjust the offset voltage during an automatic operation or manual operation using an auto balance sensor (high accuracy type), the maintenance output and maintenance LED turn ON.

Note 4) When overcurrent flows to the maintenance detection output circuit or abnormal output circuit, the maintenance output or abnormal output will be turned OFF.

Note 5) There is a delay of approx. 500ms after power is supplied until a valid signal is output.
When using the output signal(s) with a PLC, do not perform any signal processing for a minimum of 1 second after supplying power to the ionizer.

4) At abnormal operation of feedback sensor, auto balance sensor (high accuracy type), CPU

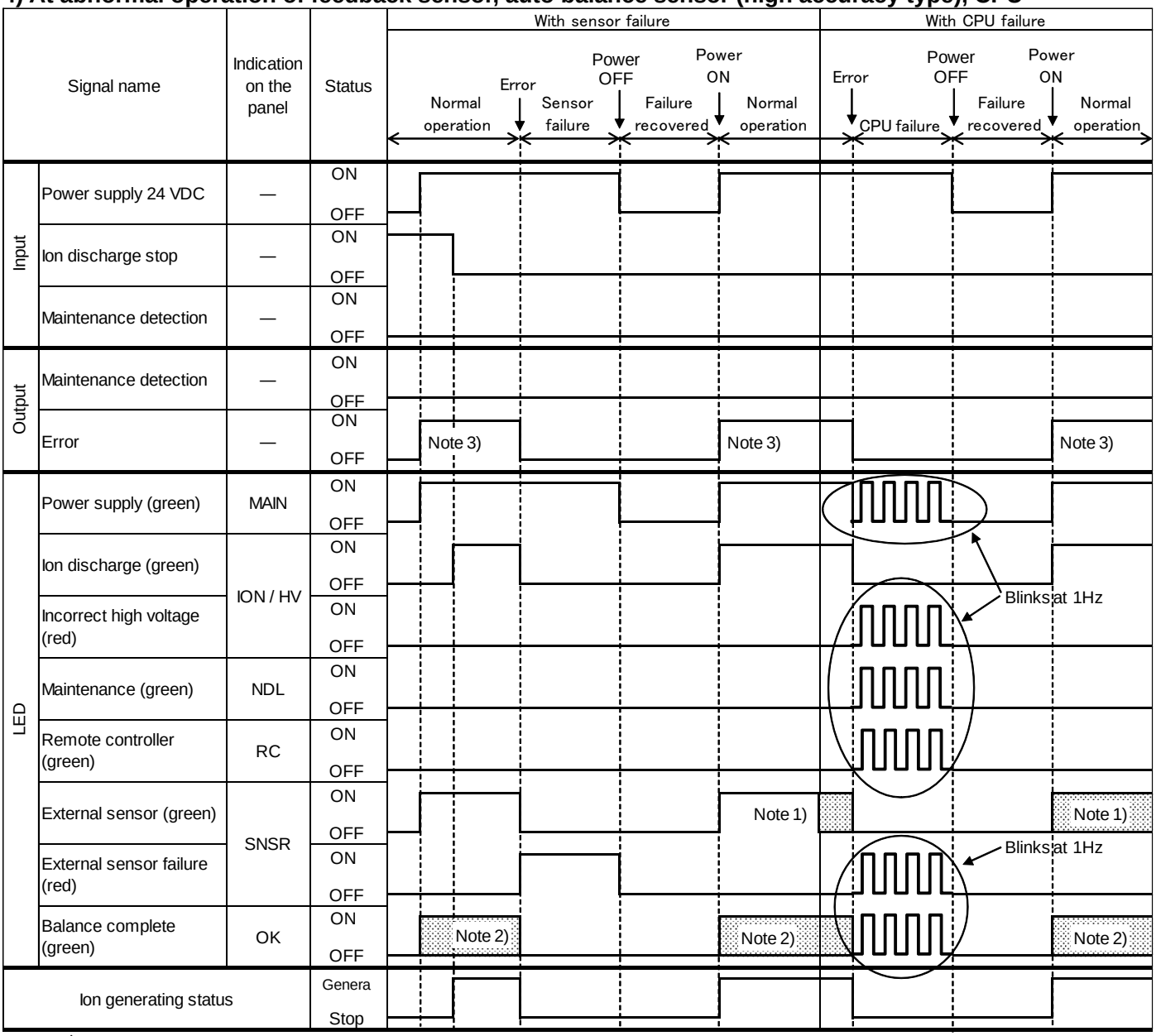

Note 1) When a sensor is connected, green LED of SNSR turns ON, and it turns OFF when disconnected.

Note 2) When static neutralization is completed in the sensing AC mode with a feedback sensor, or when the ionizer is operating in the automatic operation mode or in a manual operation mode with an auto balance sensor (high accuracy type), the OK LED turns ON when the offset voltage is less than +/− 30V, and the OK LED turns OFF when the feedback sensor or an auto balance sensor (high accuracy) is not connected.

Note 3) There is a delay of approx. 500ms after power is supplied until a valid signal is output.
When using the output signal(s) with a PLC, do not perform any signal processing for a minimum of 1 second after supplying power to the ionizer.

5) During abnormal manual operation

	Signal name	Indication on the panel	Status
Input	Power supply 24 VDC	—	ON / OFF
Input	Ion discharge stop	—	ON / OFF
Input	Maintenance detection	—	ON / OFF
Output	Maintenance detection	—	ON / OFF
Output	Error	—	ON / OFF
LED	Power supply (green)	MAIN	ON / OFF
LED	Ion discharge (green)	ION / HV	ON / OFF
LED	Incorrect high voltage (red)	ION / HV	ON / OFF
LED	Maintenance (green)	NDL	ON / OFF
LED	Remote controller (green)	RC	ON / OFF
LED	External sensor (green)	SNSR	ON / OFF
LED	External sensor failure (red)	SNSR	ON / OFF
LED	Balance complete (green)	OK	ON / OFF
	Ion generating status		Genera / Stop

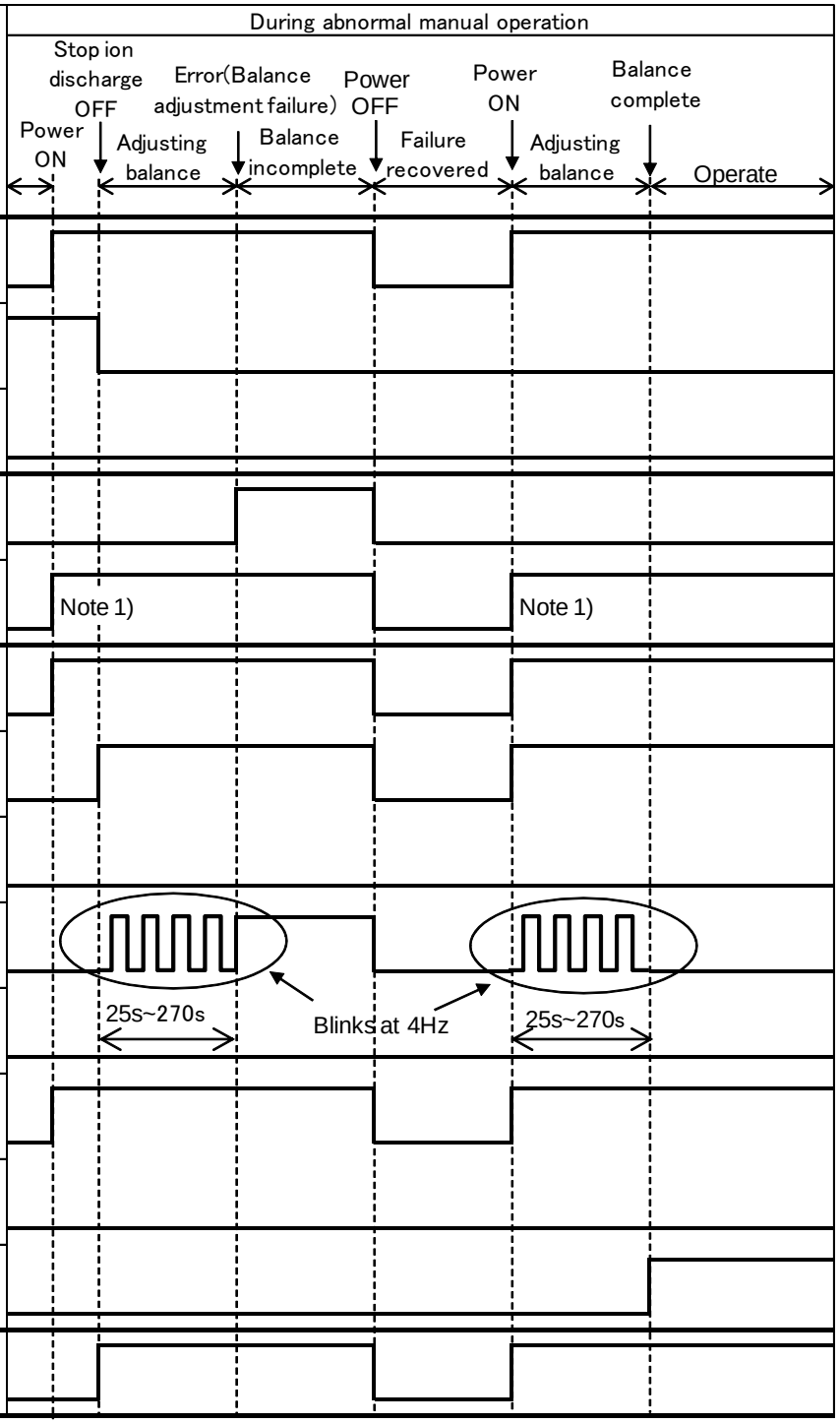

Note 1) There is a delay of approx. 500ms after power is supplied until a valid signal is output.
When using the output signal(s) with a PLC, do not perform any signal processing for a minimum of 1 second after supplying power to the ionizer.

5. Function

5-1. Operation modes

This product has 4 operation modes AC mode, dual AC mode, sensing AC mode and DC mode. The applicable operation mode varies depending on the model.

Ionizer operation modes

- IZS40
  - AC mode (During continuous static neutralization operation)
  - DC mode (Either positive ions or negative ions are continuously discharged during operation)
- IZS41
  - AC mode
    - Continuous static neutralization operation
    - Manual operation (When auto balance sensor [high accuracy type] is used)
    - Automatic operation (When auto balance sensor [high accuracy type] is used)
  - Sensing AC mode
    - Energy saving operation (When feedback sensor is used)
    - Continuous static neutralization operation (When feedback sensor is used)
  - DC mode (Either positive ions or negative ions are continuously discharged during operation)
- IZS42
  - Dual AC mode
    - Continuous static neutralization operation
    - Manual operation (When auto balance sensor [high accuracy type] is used)
    - Automatic operation (When auto balance sensor [high accuracy type] is used)

5-1-1. Operation modes of IZS40

1) AC mode

Ions of different polarity are generated alternately according to the frequency set for FREQ SELECT to de-ionize.

When ion balance becomes unbalanced due to ionizer installation environment, it may be adjusted using a balance adjusting trimmer.

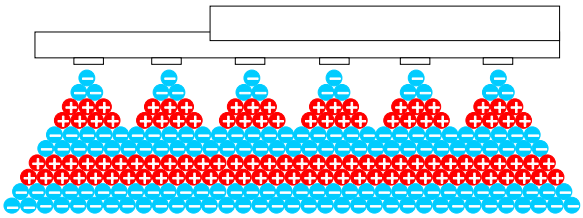

Ion generation image in AC mode

2) DC mode

Positive ("+") or Negative ("-") ions are generated according to either polarity set for FREQ SELECT.

5-1-2. Operation modes of IZS41

1) AC mode

AC mode has three operation modes shown below.

Continuous static neutralization operation mode

Sensor inside the ionizer detects the ion condition around the ionizer. When there is an ion imbalance, the ionizer generates ions of different polarity alternately to de-ionize and achieve the optimum offset voltage.

When operating in this mode, set the operation mode select switch to "AUTO".

Ion generation frequency is set for FREQ SELECT.

When offset voltage becomes unbalanced due to ionizer installation environment, it can be adjusted using a offset voltage adjusting trimmer.

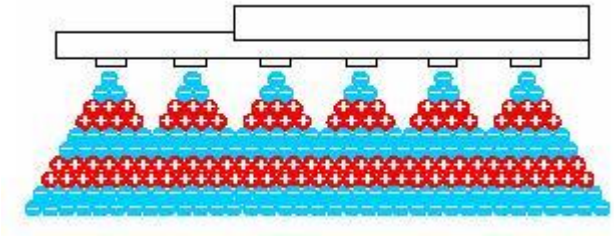

Ion generation image in AC mode

Manual operation mode (When auto balance sensor [high accuracy type] is used)

To adjust an ion imbalance due to the installation environment, an offset voltage adjusting trimmer (manual) is mounted. A measuring instrument is necessary when adjusting the offset voltage.

In the manual operation mode, the sensor is used to automatically adjust the offset voltage with the offset voltage adjusting trimmer while checking the output from the measuring instrument. After completing the offset voltage adjustment, the operation proceeds to a continuous static neutralization operation with the internal sensor.

In the manual operating mode, the auto balance sensor (high accuracy type) is installed close to the workpiece or at the position where it is required to detect the offset voltage. Ions which are generated from the ionizer are detected by the auto balance sensor (high accuracy type) and will automatically optimize the offset voltage. After adjusting the offset voltage, it is possible to operate the ionizer with the sensor removed.

When selecting this operation mode, connect the auto balance sensor (high accuracy type) to the ionizer and set the Operation Mode Set Switch to "MAN".

When installing the auto balance sensor (high accuracy type), face the metallic surface of the sensor to the ionizer and mount it to the same level as the workpiece or at the position where the offset voltage shall to be detected.

It is recommended to position the sensor 100 to 2000mm from the ionizer. The sensor can be used at a distance out of this range, but it may not operate normally depending on the operating conditions. Be certain to confirm the normal operation mode before starting operation.

After completing the offset voltage adjustment in the manual operation mode, the offset voltage adjusting trimmer will be disabled.

To enable the offset voltage adjusting trimmer, remove the sensor, and set the Operation Mode Set Switch to "AUTO". (Manual operation will be disabled.)

By adjusting the offset voltage in the manual operation mode, the adjusting hours may be reduced, and variation in the offset voltage due to adjustment by different operators can be eliminated.

When offset voltage adjustment with higher accuracy is required, it is recommended to use a measuring instrument such as charge plate monitor and adjust manually.

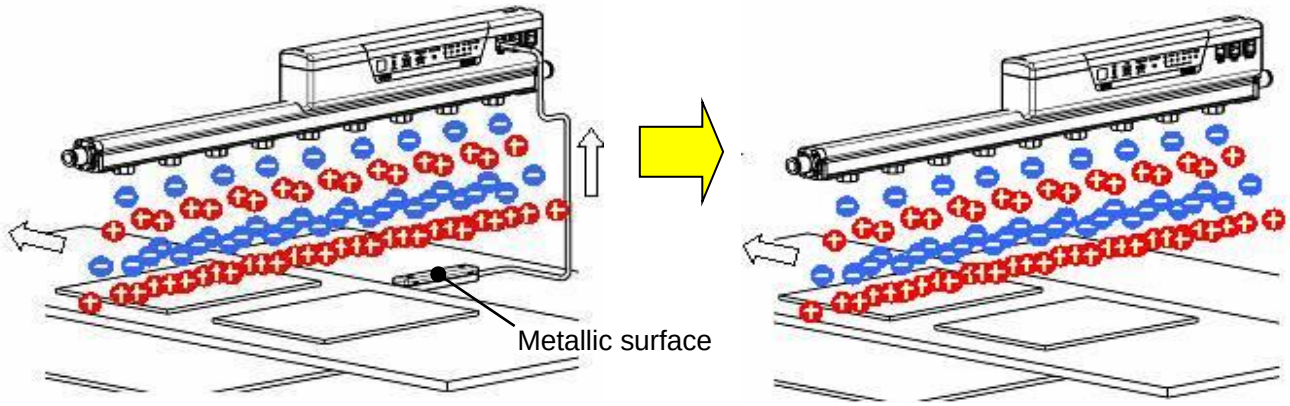

Automatic operation mode (When auto balance sensor [high accuracy type] is used)

When selecting this operation mode, connect the auto balance sensor (high accuracy type) to the ionizer, and set the Operation Mode Set Switch to "AUTO".

In the automatic operation mode, the ionizer maintains the optimal offset voltage with the auto balance sensor (high accuracy type) detecting ions which are generated from the ionizer. For this reason, auto balance sensor (high accuracy type) should be installed close to the workpiece or in a position where the offset voltage needs to be detected.

In the automatic operation mode, the offset voltage adjusting trimmer will be disabled.

"Automatic operation mode" is recommended for static neutralization a workpiece which is stationary or for static neutralization the entire room.

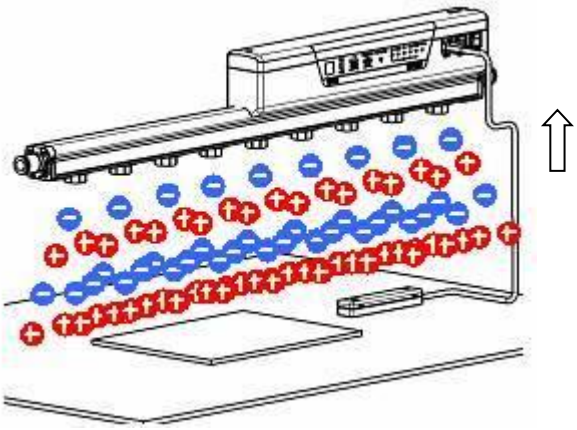

Example of ion discharge by IZS41

2) Sensing AC mode

In the sensing AC mode, a feedback sensor detects the electrification of the workpiece. The ionizer discharges ions of the opposite polarity to the ions on the workpiece. This reduces the discharge time.

Sensing AC mode is suitable for static neutralization a workpiece which has a high electrification potential or which moves at a high speed.

Electrification of the workpiece can be detected automatically by connecting a feedback sensor to the ionizer.

The feedback sensor should be mounted with the detecting port facing the workpiece.

It is recommended that the sensor is positioned 10 to 50mm from the workpiece. The sensor can be used at a distance out of this range, but it may not operate normally depending on the operating conditions. Be certain to confirm the normal operation before starting operation. When feedback sensor is connected, the offset voltage adjusting trimmer will be disabled.

Sensing AC mode has two operation modes as shown below.

Energy saving operation mode (When feedback sensor is used)

In the energy saving operation mode, when electrification potential of the workpiece becomes +/- 30V or less (at the sensor installation level of 25mm), the ionizer automatically stops discharging ions. The ionizer discharges ions automatically when the electrification potential of the workpiece exceeds +/- 30V.

When this operation mode is selected, connect the feedback sensor to the ionizer and set the rotary switch with the FREQ SELECT indicator to 8 or 9.

Energy saving operation mode is recommended for de-ionization of a conductive workpiece.

Continuous static neutralization operation mode (When feedback sensor is used)

In the continuous static neutralization operation mode, the operation is switched to AC operation when the electrification potential of the workpiece becomes +/- 30V or less, and keeps static neutralization continuously.

When this operation mode is selected, connect a feedback sensor to the ionizer and set the frequency (when the operation is switched to AC operation) on the rotary switch with the FREQ SELECT indicator from 1 to 7.

For setting the frequency from 1 to 7 with the rotary switch, refer to "5-2. Frequency Set Switch".

Continuous static neutralization operation mode is recommended for static neutralization of a non-conductive workpiece.

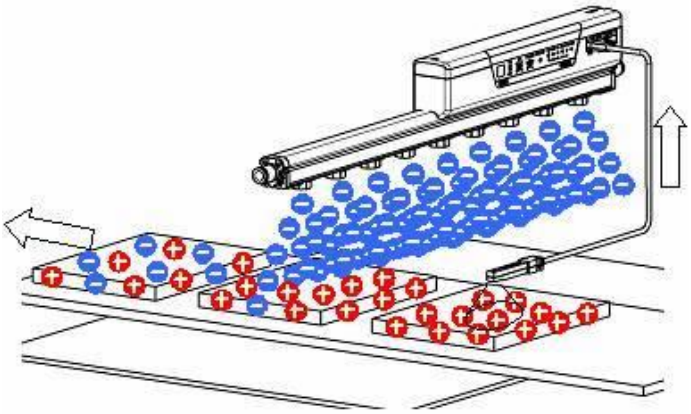

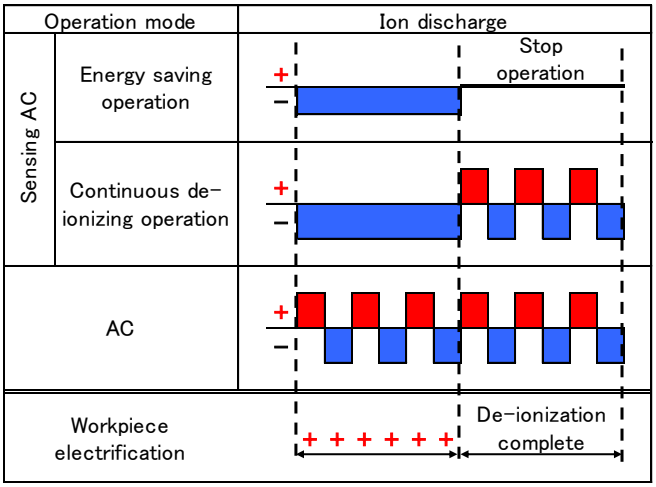

3) DC mode

Positive ("+") or Negative ("-") ions are generated according to either polarity set for FREQ SELECT.

5-1-3. Operation modes of IZS42

In the dual AC mode, ions of different polarity are generated alternately from emitters positioned next to each other, and either "+" or "-" ions are generated according to the frequency set for FREQ SELECT to de-ionize.

In the dual AC mode, it is possible to reduce the potential amplitude applied to the workpiece compared with in the AC mode. (Refer to "6. Performance" for details)

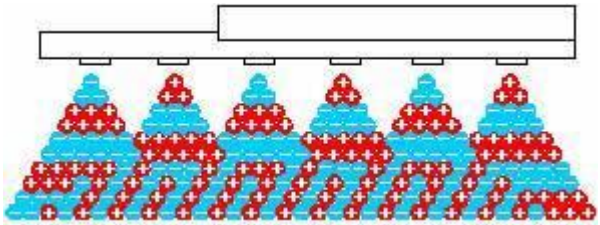

Ion generation image in dual AC mode

For operation mode of IZS42, continuous static neutralization operation mode, manual operation mode (when using an auto balance sensor [high accuracy type]), or automatic operation mode (when using an auto balance sensor [high accuracy type]) can be selected.

Each operation mode is same as that of the IZS41 excluding the ion generating method. Refer to "Continuous static neutralization operation mode", "Manual operation mode (When auto balance sensor [high accuracy type] is used)" and "Automatic operation mode (When auto balance sensor [high accuracy type] is used)" in "1) AC mode" in "5-1-2. Operation modes of IZS41".

5-2. Frequency Set Switch

This switch is used to enable the frequency when operating the ionizer, after static neutralization in the sensing AC mode is completed (IZS41) and for selecting the settings of the remote controller (IZS41 and IZS42). Use a rotary switch with the FREQ SELECT indicator for setting the frequency.

Settings performed by the Frequency Set Switch are as shown in the table.

IZS40

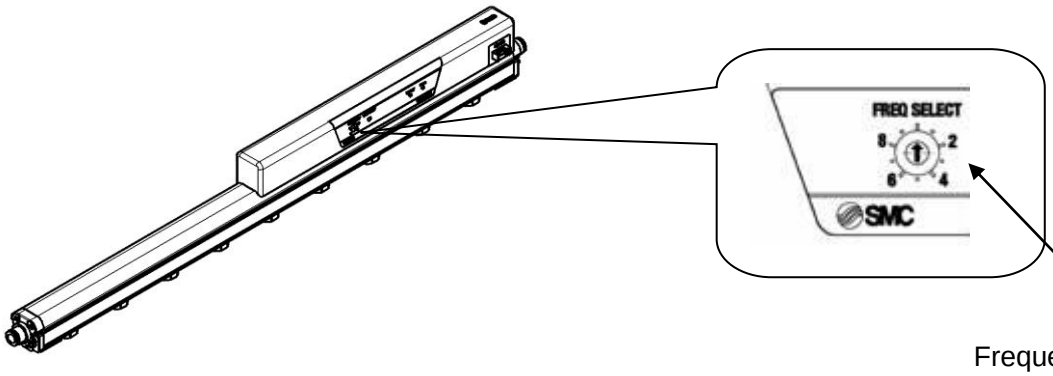

Frequency Set Switch
(Fig. shows the setting to 0.)

IZS41, IZS42

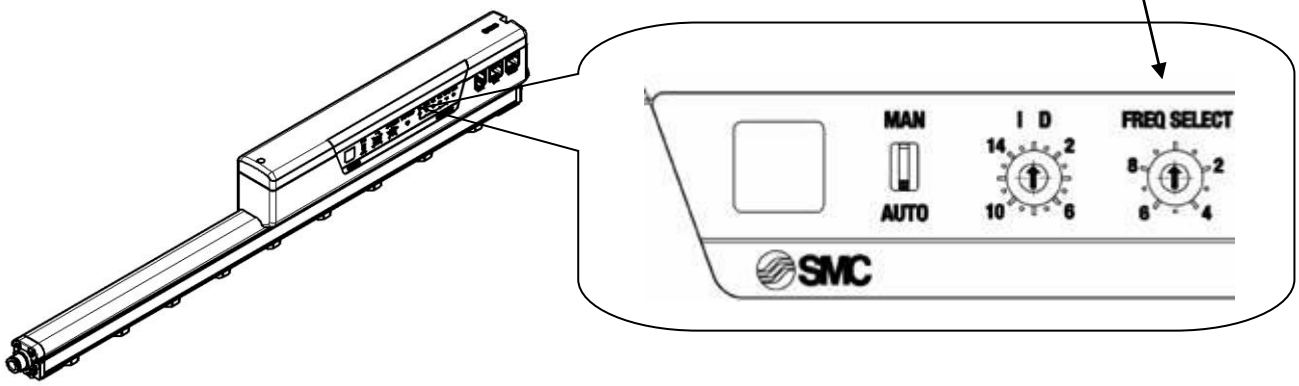

Frequency Set Switch set No.	Frequency (Hz), Remote controller		
	IZS40	IZS41	IZS42
0	1	Remote controller *1	Remote controller *1
1	3	1	0.1
2	5	3	0.5
3	8	5	1
4	10	10	3
5	15	15	5
6	20	20	10
7	30	30	15
8	DC +	DC +	20
9	DC −	DC −	30

*1: Set when remote controller is used.

5-3. Adjustment of offset voltage

Offset voltage of the ionizer is adjusted before shipment. However, readjustment might be required depending on the installation environment when offset voltage adjustment can be performed. (The same applies when the ionizer is moved and installed in a different location.)

Offset voltage can be adjusted either by manual adjustment (IZS40, IZS41 and IZS42) or manual operation using an auto balance sensor (high accuracy type) (IZS41 and IZS42).

When there are ionizers installed near the ionizer whose offset voltage is to be adjusted, stop the ionizers which are not adjusted for the offset voltage before starting adjustment.

5-3-1. Manual offset voltage adjustment

Applicable models: IZS40, IZS41, IZS42

Manual offset voltage adjustment can be performed using a offset voltage adjusting trimmer which has an indication of ZERO ADJUST.

When performing the manual adjustment of the ion balance, use a measuring instrument such as a charge plate monitor.

For offset voltage adjustment, rotate the trimmer (using a flathead screwdriver) counterclockwise to increase the positive ions; and rotate the trimmer counterclockwise to increase the negative ions.

IZS40

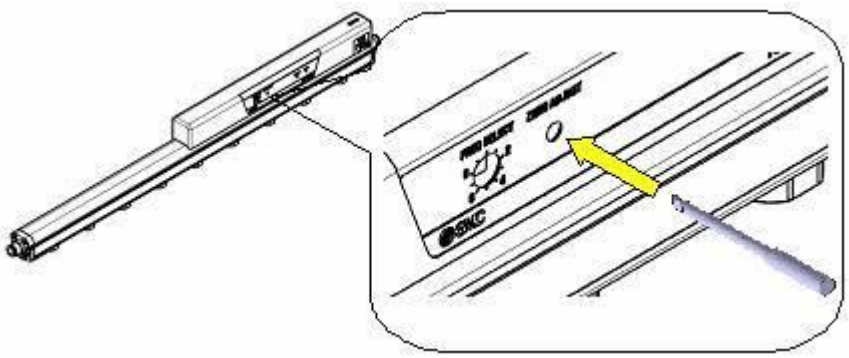

IZS41, IZS42

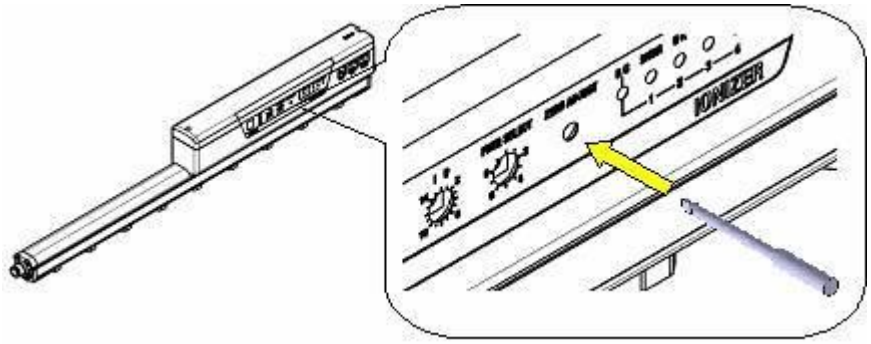

5-3-2. Offset voltage adjustment by manual operation

Applicable models: IZS41, IZS42

In the offset voltage adjustment manual operation, the auto balance sensor (high accuracy type) detects the offset voltage and shall maintain an optimal balance. For this reason, install the auto balance sensor (high accuracy type) at a position where the offset voltage is required to be adjusted (e.g. close to the workpiece).

Manual operation can be started by setting the Operation Mode Set Switch to MAN and turning power ON with the auto balance sensor (high accuracy type) connected.

When offset voltage adjustment is completed, the balance complete LED (OK) turns ON and the ionizer operates within the adjusted offset voltage setting. When offset voltage adjustment fails to be completed in a defined period of time, the maintenance detection output signal turns ON, and the maintenance LED (NDL) turns ON as well. (Abnormal signal will not be output.) Operation of the ionizer does not stop when this phenomenon occurs. The ionizer will continue to operate with the offset voltage data set during the last operation. (When the ionizer is operated for the first time after ex-factory, default is used.)

When the Operation Mode Set Switch is set to MAN, the offset voltage adjusting trimmer is disabled.

	Maintenance (NDL) LED	Balance complete	Maintenance output
Offset voltage being adjusted	Blinks	Turns OFF	OFF
Offset voltage adjustment complete	Turns OFF	Blinks	OFF
Offset voltage adjustment incomplete	Blinks	Turns OFF	ON

Data set by the manual operation can be released by setting the Operation Mode Set Switch to AUTO without connecting an external sensor. (Note that after releasing the data, the ionizer operates according to the setting by the offset voltage adjusting trimmer.)

Auto balance sensor (high accuracy type) can be released after completing the manual operation.

When offset voltage adjustment with higher accuracy is required, it is recommended that a measurement instrument, such as charge plate monitor be used then adjust manually.

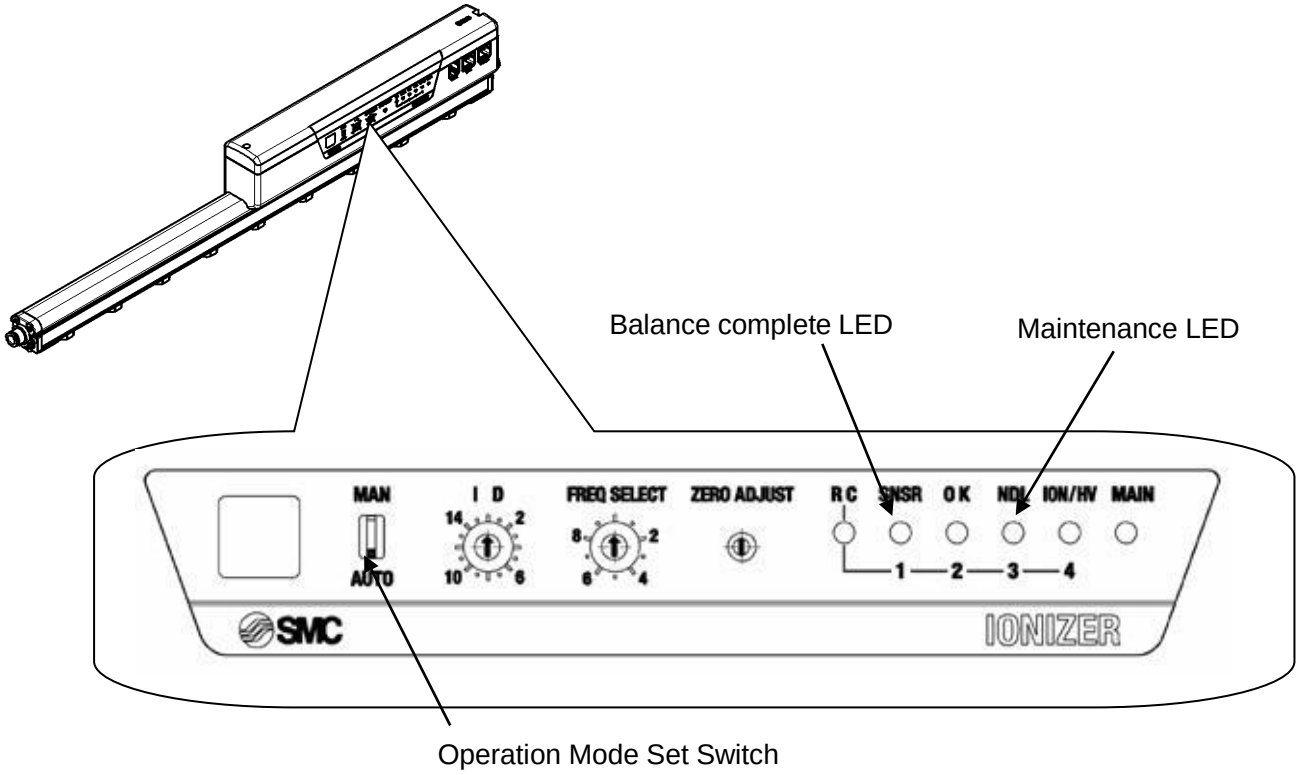

5-4. ID number settings

Applicable models: IZS41, IZS42

When more than one ionizer is installed in relatively close proximity to each other, ID numbers are set to identify the ionizers for set value change using a remote controller.

ID numbers from 0 to 15 can be set for a total of 16 ionizers. Use a rotary switch with an ID indicator setting.

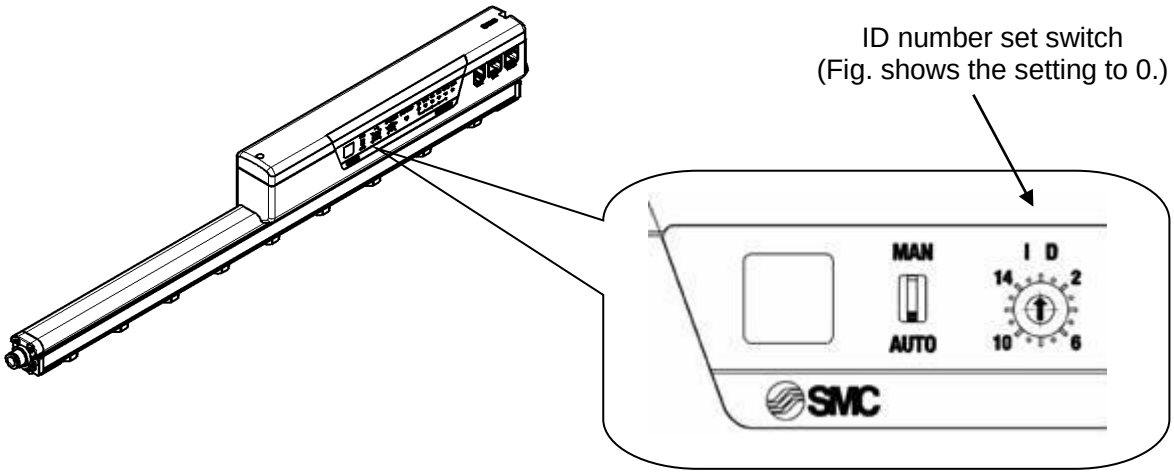

5-5. Functions of the Operation Mode Set Switch

Applicable models: IZS41, IZS42

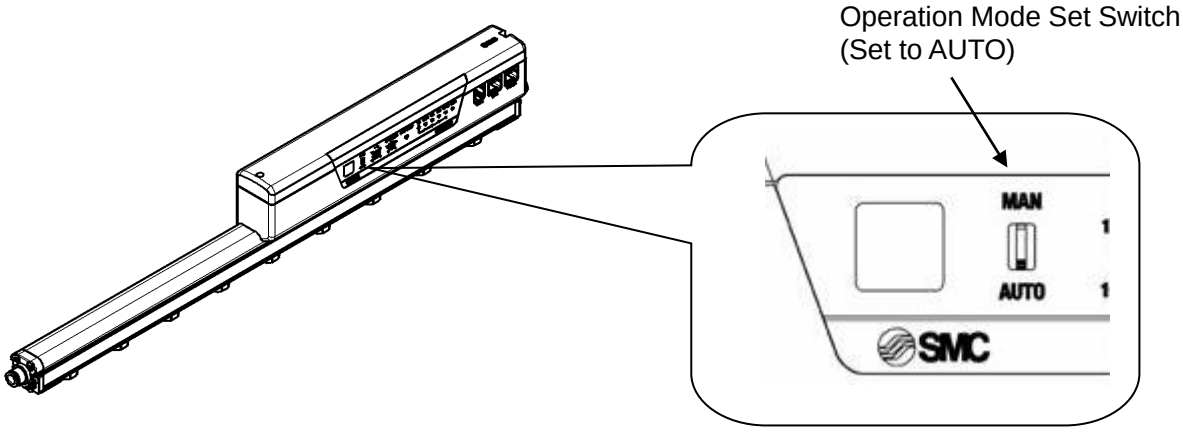

Operation Mode Set Switch of the ionizer is used to set the operation mode when auto balance sensor (high accuracy type) is connected. (It is set to AUTO as default.)

AUTO: Automatic operation
MAN: Manual operation

Refer to "5-1-2. Operation modes of IZS41" for details of automatic operation and manual operation.

5-6. Maintenance detector

Models with maintenance detection function: IZS41, IZS42

If the ionizer is used for a long time, contamination such as dust can stick to the emitters, reducing the static neutralization performance. For this reason, IZS41 and IZS42 have a maintenance detecting function.

Maintenance detection is performed when a maintenance detection signal from an emitter is input.

When the emitter requires cleaning due to deterioration of static neutralization ability, the maintenance detection signal turns ON and maintenance LED also turns ON to notify the timing of cleaning. When the maintenance LED turns ON, make sure to clean the emitter. (Ionizer keeps operating even after the maintenance detection signal and maintenance LED turn ON.)

It is not possible to detect deterioration in static neutralization ability only by connecting a feedback sensor (IZS41) or auto balance sensor (IZS41, IZS42). Input a maintenance detection signal periodically to check the static neutralization ability.

Maintenance detection of emitters should be performed without a workpiece, as it is performed with ions discharged from the ionizer at a regular cycle and this may electrify the workpiece.

5-7. Alarm function

When an abnormality occurs while the ionizer is operating, an output signal or LED notification is generated. Depending on the content of abnormality, the ionizer either continues or stops operation.

5-7-1. Alarms for IZS40

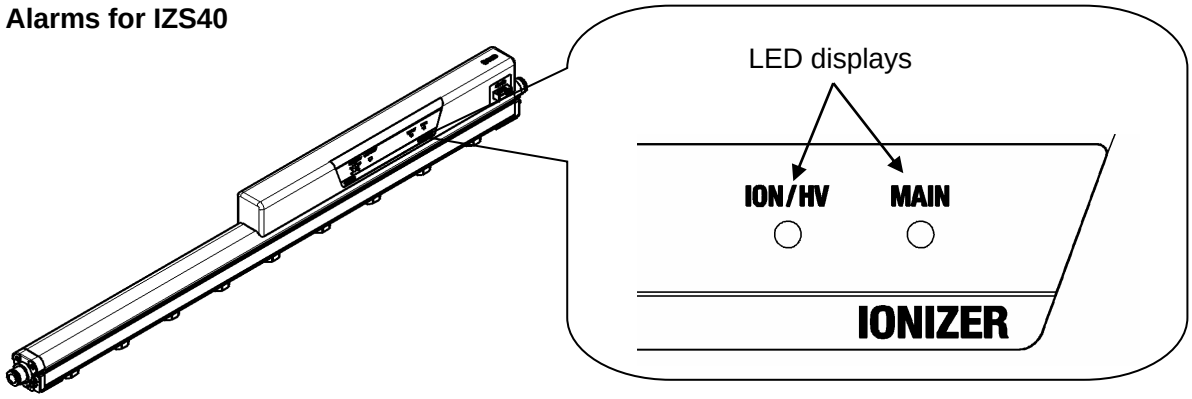

Alarm name	LED ON	Blinking LED (Blinks at 1Hz)	Ionizer operation after generating alarm	Description	How to release error after recovery
Power supply failure	—	MAIN	Stop	When the power supply voltage in connection is outside of the specification.	Turn power off, then on again
Incorrect high voltage	ION / HV (Red)	—	Stop	When abnormal high voltage is discharged by error.	Turn power off, then on again
CPU operation failure	—	MAIN ION / HV(Red)	Stop	When CPU operates abnormally due to noise, etc.	Turn power off, then on again

5-7-2. Alarms for IZS41 and IZS42

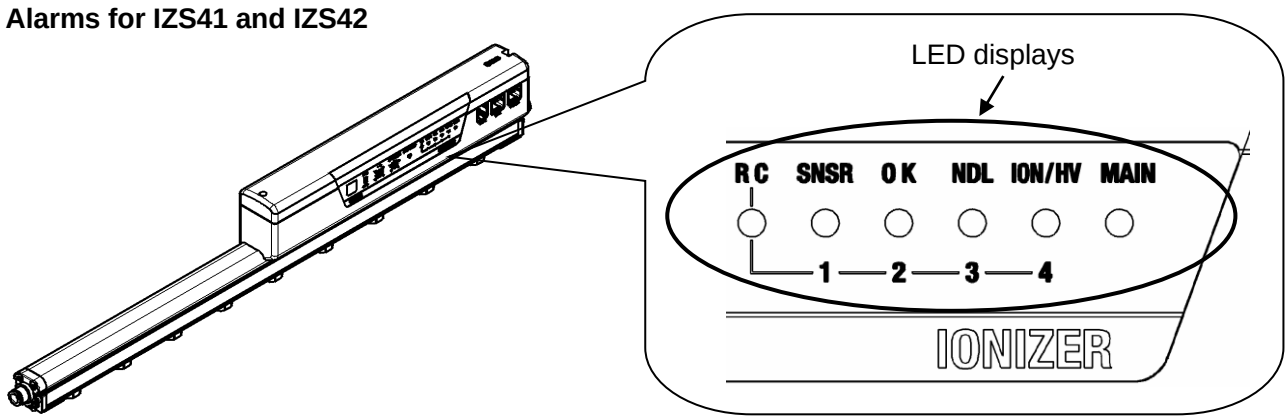

Alarm name	Output signal	LED ON	Blinking LED (Blinks at 1Hz)	Ionizer operation after generating alarm	Description	How to release error after recovery
Maintenance	Maintenance detection signal	NDL	—	Continues	When static neutralization performance deteriorates due to contamination or wearing of emitters	Input ion discharge signal, and turn off the power and then on again.
Manual operation error	Maintenance detection signal	NDL	—	Continues	When the ionizer fails to adjust the offset voltage in the fixed time	Input ion discharge signal, and turn off the power and then on again.
Output overcurrent	(Output from which overcurrent is detected is turned off.)	—	ION/HV (Green)	Continues	When overcurrent flows to the output circuit	Input ion discharge signal, and turn off the power and then on again.
Power supply failure	Error signal (Contact point B)	—	MAIN	Stop	When the power supply voltage in connection is outside of the specification	Turn power off, then on again
Incorrect high voltage	Error signal (Contact point B)	ION/HV(Red)	—	Stop	When abnormal high voltage is discharged by error	Input ion discharge signal, and turn off the power and then on again.
External sensor failure Note 1)	Error signal (Contact point B)	SNSR(Red)		Stop	When the connected sensor is damaged or has a broken cable	Turn power off, then on again
CPU operation failure	Error signal (Contact point B)	—	MAIN ION/HV(Red) NDL RC SNSR(Red) OK	Stop	When CPU operates abnormally due to noise, etc.	Turn power off, then on again

Note: When feedback sensor (for IZS41) or auto balance sensor (for IZS41 and IZS42) is connected.

5-7-3. Details of the alarms

1) Maintenance (Applicable models: IZS41, IZS42)

When emitters are contaminated, worn, or damaged, notification is generated by outputting a maintenance signal and turning ON the NDL LED.

When emitter is contaminated, the abnormality can be solved by cleaning the emitter. When the emitter is worn or damaged, it is necessary to replace the emitter cartridge with a new one.

Ionizer does not stop after generating an alarm, and continues operation.

2) Abnormal manual operation (Applicable models: IZS41, IZS42)

When offset voltage cannot be adjusted in a fixed period of time in manual operation mode using an auto balance sensor (high accuracy type), the abnormality will be notified by outputting a maintenance signal and turning ON the NDL LED.

The offset voltage adjustment may have failed due to contamination, wear, or damage to the emitter, or ions discharged from the ionizer fail to reach the sensor due to objects placed around the sensor or ionizer.

Operation of the ionizer does not stop when this abnormality occurs. The ionizer keeps operating with the offset voltage data set during the last operation. (When the ionizer is operated for the first time after ex-factory, default is used.)

To resolve the abnormality, resolve the above mentioned causes and perform the manual operation again, or set the Operation Mode Set Switch to AUTO with the external sensor removed. (Note that after releasing the data, the ionizer operates according to the setting by the offset voltage adjusting trimmer.)

3) Output overcurrent (Applicable models: IZS41, IZS42)

When current which flows through the circuit exceeds that specified due to a load which is connected to the maintenance detection output or abnormal output being too small, output will be turned OFF to protect the output circuit, and the abnormality will be notified by blinking ION/HV (green).

To resolve the abnormality, check the circuit to be connected so that the current flowing to the output circuit is within the specification.

Ionizer does not stop after generating an alarm, and continues operation.

4) Power supply failure (Applicable models: IZS40, IZS41, IZS42)

When power supply which is connected to the ionizer is not within the range of 24V +/- 10%, abnormal signal output will be turned OFF (ON when it is normal), and the MAIN LED blinks.

To resolve the abnormality, connect a power supply which provides a power supply voltage of 24V +/- 10%, and supply power again.

5) Incorrect high voltage (Applicable models: IZS40, IZS41, IZS42)

When incorrect high voltage is discharged due to dew condensation or sticking of dust, etc., abnormal signal output will be turned OFF (ON when it is normal), and ION/HV turns ON red.

In order to clear the alarm, remedy the cause of the abnormal discharge and supply the power again.

6) External sensor failure (Applicable models: IZS41, IZS42)

When the cable of external sensor [Note)] is broken, abnormal signal output will be turned OFF (ON when it is normal), and SNSR LED will be turned ON red.

To solve the problem, remove the cause of the broken cable, and supply power again. When external sensor is broken, it needs to be replaced.

Note: Feedback sensor (for IZS41) or auto balance sensor (high accuracy type) (for IZS41 and IZS42)

7) CPU operation failure

When CPU makes an abnormal operation due to noise, etc., an abnormal signal output will be turned OFF (ON when it is normal), and MAIN, ION/HV (red), NDL, RC, SNSR (red) and OK LEDs blink.

Countermeasures against noise:

1) Position the ionizer away from the noise source.
2) Route the power line and cable of ionizer separately.
3) Install a noise filter to the power supply of the ionizer.

In order to clear the alarm, remedy the cause of the abnormality, and supply power again.

5-8. Remote controller

5-8-1. Outline

Applicable models: IZS41, IZS42

An infrared ray type remote controller is used for these models. Communication cannot be established if there are obstacles between the remote controller and ionizer. When operating with a remote controller, install the ionizer with the receiving part exposed, and point the sending part of the remote controller at the receiving part of the ionizer.

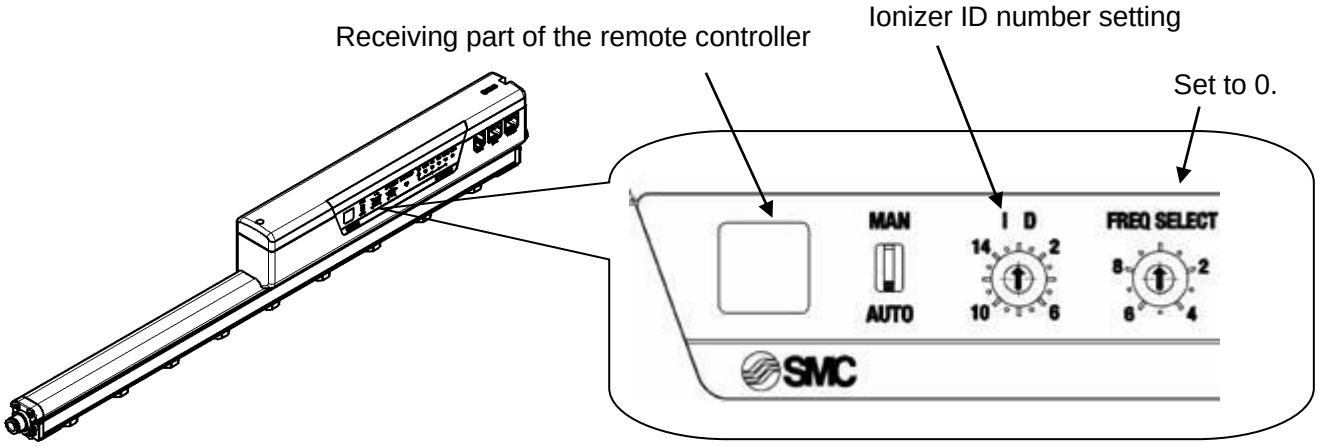

Maximum communication distance of the remote controller is 5 meters.

Before using the remote controller, set the FREQ SELECT indicator on the rotary switch of the ionizer to 0. When it is set to any value other than 0, remote controller cannot be used.

When the FREQ SELECT indicator on the rotary switch of the ionizer is set to 0, setting the offset voltage adjusting trimmer with the indication of ZERO ADJUST is disabled.

5 settings can be performed with the remote controller as shown below.

1) ID number setting
2) Frequency setting
3) Offset voltage adjustment
4) Internal sensor ON/OFF
5) Maintenance alarm setting

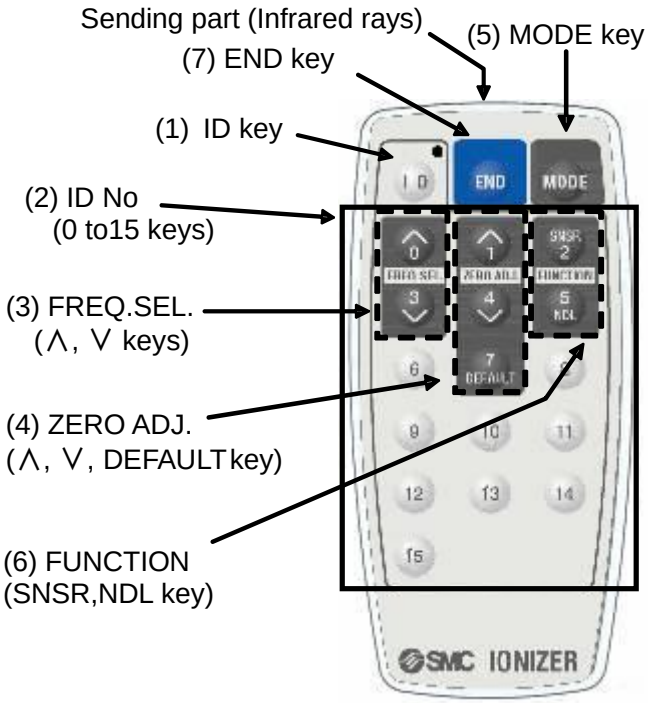

No.	Description	Key name	Remarks
(1)	ID number setting	ID key	Input when enabling the ID number setting.
(2)		ID numbers (Keys 0 to 15)	Sets the ID number. Not operable when the ID key is OFF (LED of the ID key should be ON).
(3)	Setting of frequency	FREQ.SEL. (∧ and ∨ keys)	Sets the ion generating frequency of the ionizer.
(4)	Offset voltage adjustment	ZERO ADJ. (∧, ∨, DEFAULT keys)	Used for offset voltage adjustment. Returns to the default adjustment by pressing the DEFAULT key for 2 seconds.
(5)	Internal sensor ON/OFF Setting of maintenance detecting level	MODE key	Input when enabling the FUNCTION input.
(6)		FUNCTION (SNSR , NDL keys)	SNSR key: Sets the internal sensor ON/OFF. NDL key: Sets the maintenance detecting level.
(7)	Remote controller setting clear	END key	Inputs to clear the communication with the ionizer.

Flow of settings

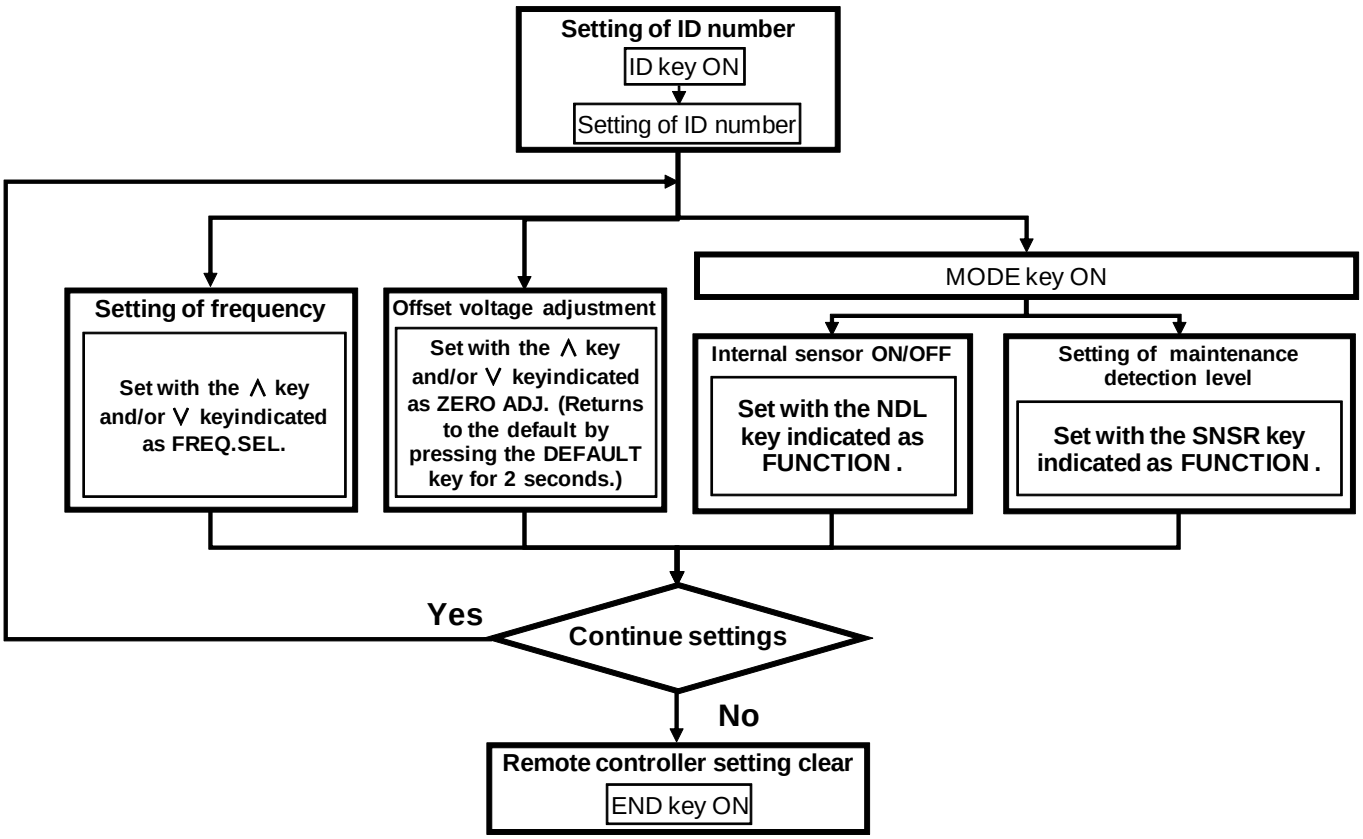

5-8-2. Operation with remote controller

Before performing settings with a remote controller, make sure to set the same ID number as the ionizer to be controlled to the remote controller, and enable the communication.

If the ID number is not set, it is not possible to perform settings with the remote controller.

When the remote controller and ionizer are ready for communication, RC of the ionizer LEDs turns ON, and it blinks every time it receives a signal from the remote controller.

After completing settings with the remote controller, cancel the communication between the remote controller and ionizer. It is not possible to start operation of the ionizer until communication is canceled. (Without any signal received to the ionizer from the remote controller for 30 seconds, communication will be canceled automatically.)

When communication is canceled, RC of the ionizer LEDs will be turned OFF.

When changing settings with the remote controller, confirm that the signal is securely received by the ionizer with referring to the LEDs shown below.

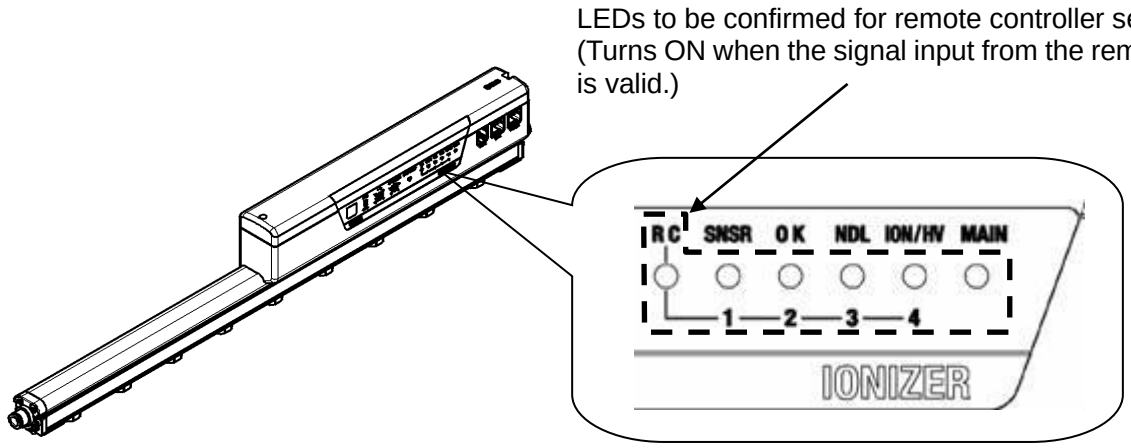

1) ID number setting

For ID number setting, press the ID key of the remote controller, and then, press the ID number from 0 to 15 to set.

When the ID key is pressed, an LED on the upper right of the key turns ON, and it turns OFF when the ID number is set.

For the LED indication of the ionizer, the LED indicated as RC of the ionizer which is now ready to communicate turns ON.

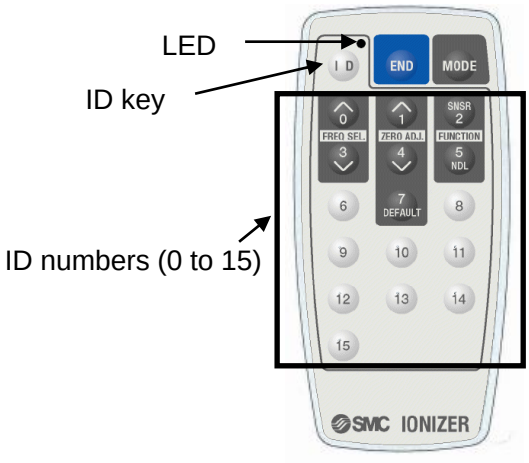

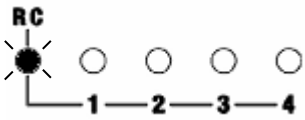

LEDs of the ionizer

2) Frequency setting (Default: 30Hz)

Use the ∧ key or ∨ key with the indication of FREQ.SEL. to set frequency.

Frequency will be higher by pressing the ∧ key, and it will be lower by pressing the ∨ key.

Ionizer LEDs from 1 to 4 turns ON or OFF according to the set frequency, and RC LED turns ON when no signal is received from the remote controller, and blinks when a signal is received from the remote controller. Refer to the diagram shown below for details.

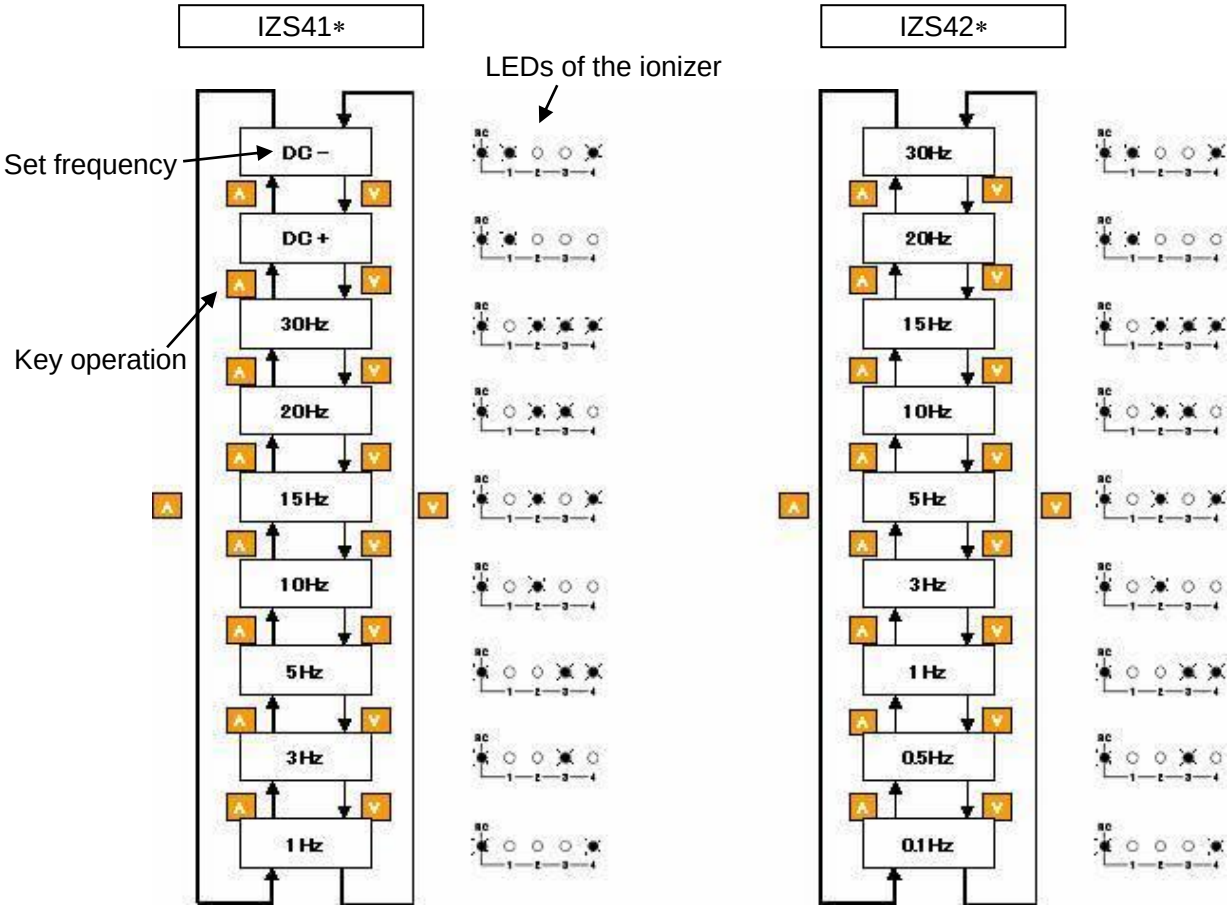

3) Offset voltage adjustment

Offset voltage can be adjusted using the ∧ key or ∨ key with an indication of **ZERO ADJ**.

Pressing ∧ key increases positive ions (LED 1 blinks), and pressing ∨ key increases negative ions (LED 4 blinks). When it reaches the adjusting limit, the ionizer LED 1 turns ON for the positive limit, and LED 4 turns ON for the negative limit.

By pressing the **DEFAULT** key for 2 seconds or more, it returns to the default offset voltage, and LED 1 and LED 4 turn OFF after blinking.

RC LED turns ON when no signal is received from the remote controller, and blinks when a signal is received.

When performing adjustment of offset voltage, use a measuring instrument such as a charge plate monitor.

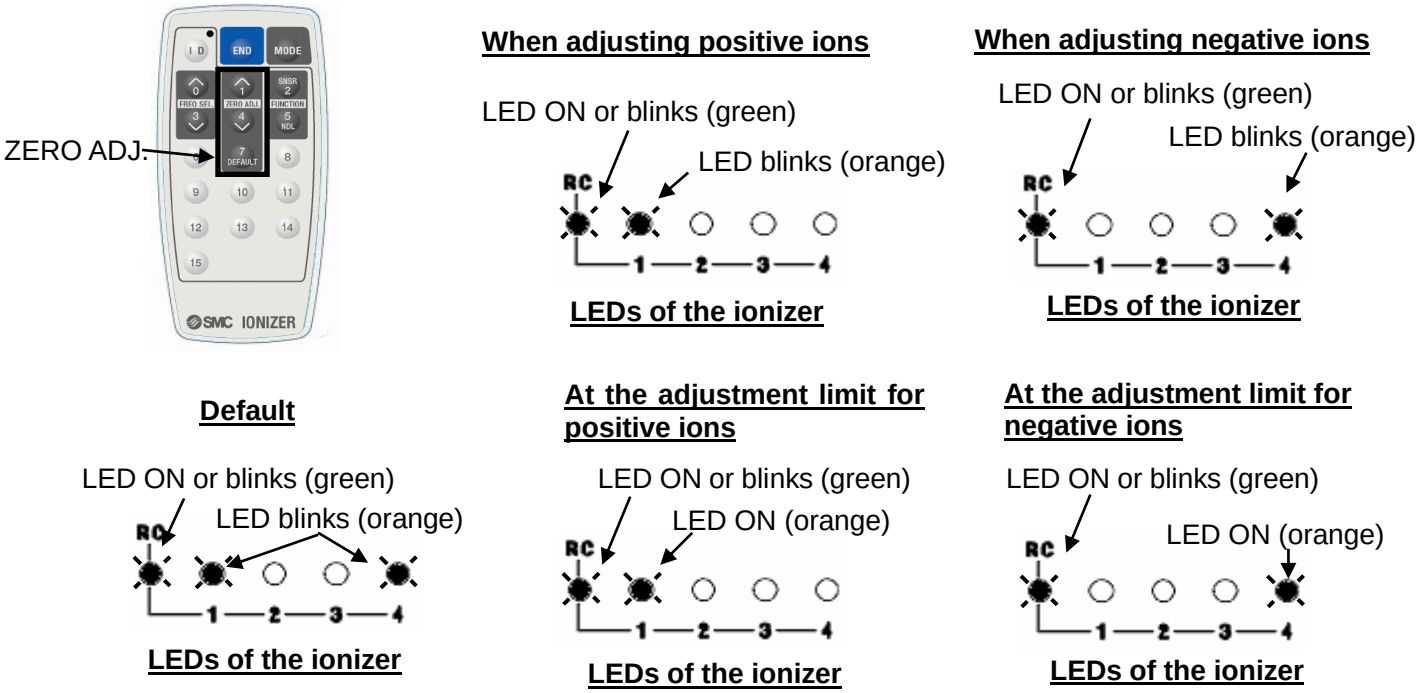

4) Internal sensor ON/OFF (Default: ON)

Internal sensor can be switched ON/OFF with the **MODE** key and **SNSR** key which is indicated as **FUNCTION**.

Pressing the **MODE** key enables the **SNSR** key, and the internal sensor is turned ON/OFF every time the **SNSR** key is pressed.

For the ionizer LEDs, when the **FUNCTION** keys are enabled by pressing the **MODE** key, LED 4 turns ON red. LED1 turns ON green when the internal sensor is enabled, and LED 1 turns OFF when it is disabled, when the **SNSR** key is pressed.

LED 3 turns ON, blinks or OFF depending on the setting of the maintenance alarm.

RC LED (green) turns ON when no signal is received from the remote controller, and blinks when a signal is received.

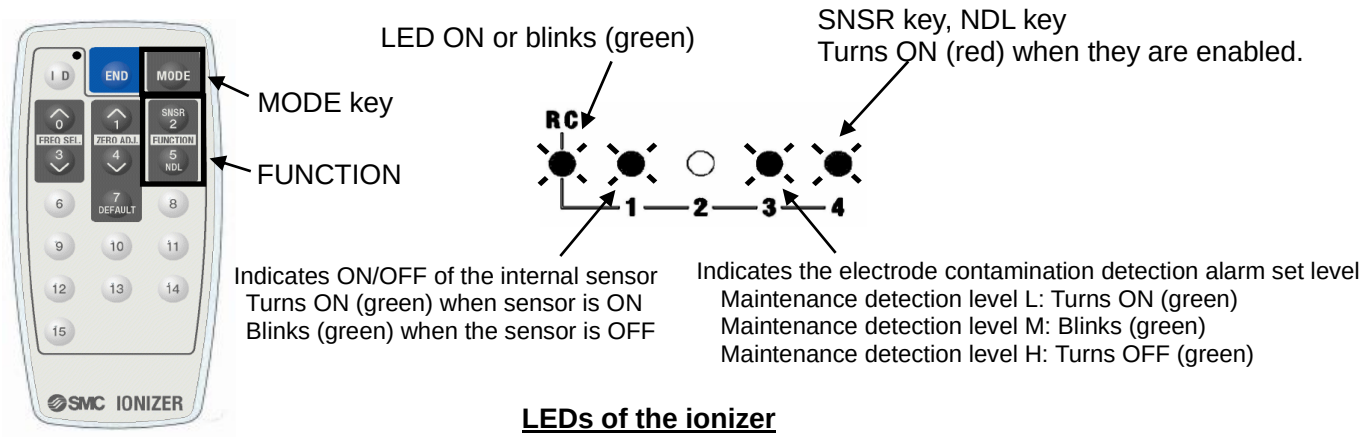

5) Maintenance alarm setting (Default level: L)

Settings of the maintenance alarm can be performed with the **MODE** key and **NDL** key which is indicated as **FUNCTION**.

NDL key is enabled by pressing the MODE key. Every time the NDL key is pressed, the maintenance detecting level is changed from L (low), M (middle), and to H (high) in turn.

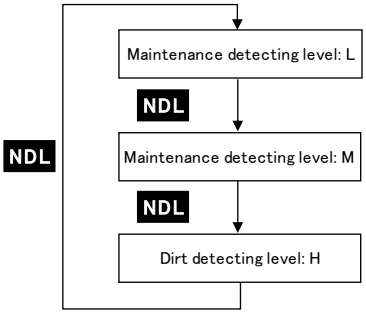

Maintenance detecting level L: Time required for static neutralization will be longer compared with the early stage
Maintenance detecting level M: Time required for static neutralization begins to be longer
Maintenance detecting level H: No influence is given to the time required for static neutralization

When **MODE** key is pressed and **FUNCTION** keys are enabled, LED 4 turns ON red. For maintenance detecting level L, LED 3 turns ON (green) when the **NDL** is pressed. LED 3 (green) blinks when the maintenance detection level is set to M, and LED 3 turns OFF when the maintenance detection level is H.

LED 1 turns ON when the internal sensor is enabled, and blinks when it is disabled.

RC LED (green) turns ON when no signal is received from the remote controller, and blinks when a signal is received.

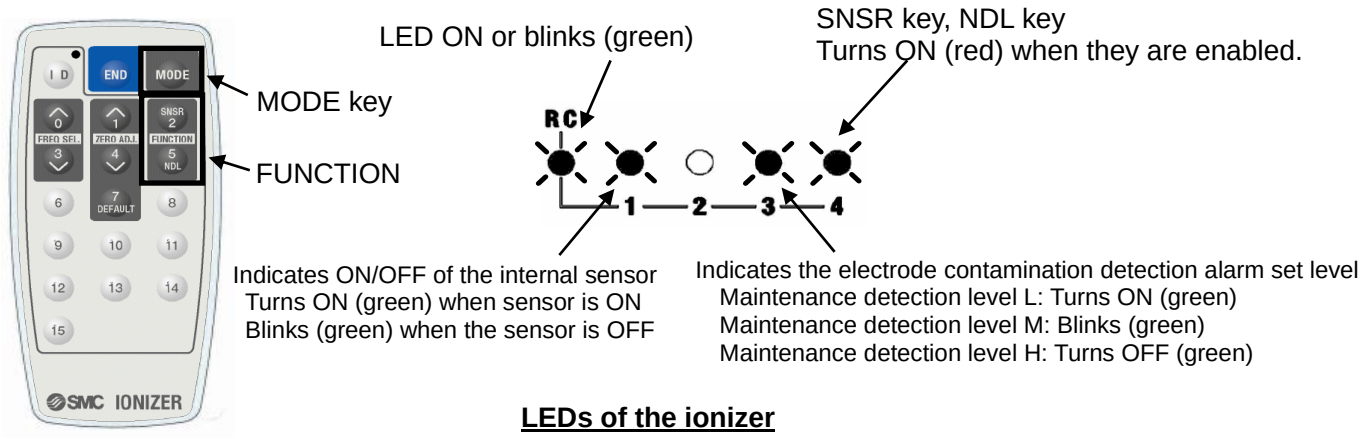

LEDs of the ionizer

6) Communication cancellation with ionizer

Use **END** key to cancel the communication.

Communication between the remote controller and ionizer can be canceled by pressing the **END** key. (Without any signal received to the ionizer from the remote controller for 30 seconds, communication will be canceled automatically.)

6. Performance

Performance data shown in this chapter is based on an electrified plate (dimensions: 150 x 150mm, electrostatic capacity: 20pF) defined by ANSI standard (ANSI/ESD STM3.1-2006). This data can be used as a guideline for selection, as the performance data may vary depending on the material and size of the workpiece.

6-1. Installation Distance and Discharge Time (Discharge Time from 1000V to 100V)

Applicable models: IZS40, IZS41

1) Without air purge
For IZS40-1120□/J/V, IZS41-1120□/J/V

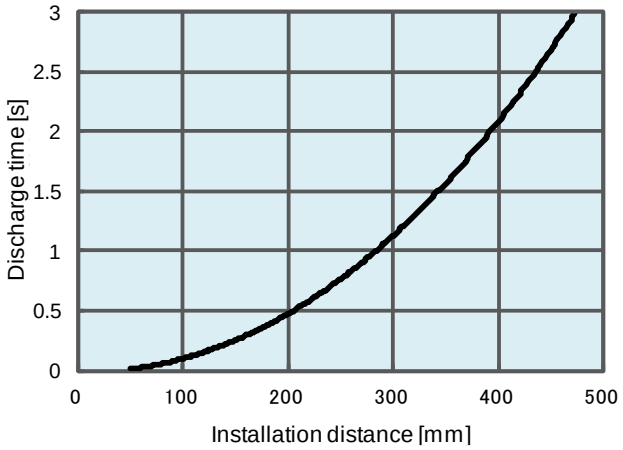

2) With High speed static neutralization cartridge, With air purge, For IZS40-1120□, IZS41-1120□

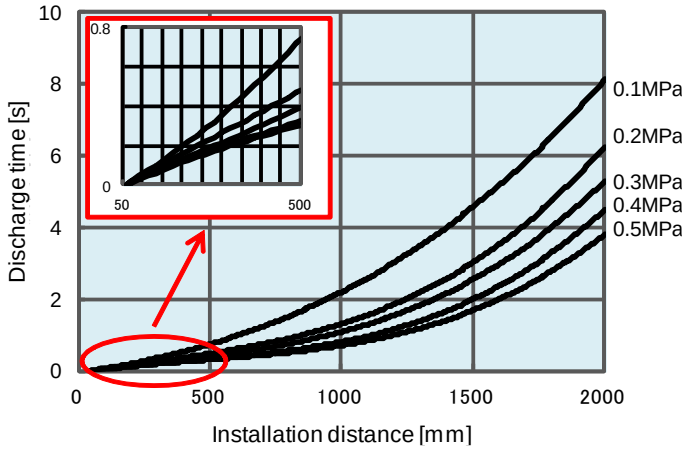

3) With Energy saving static neutralization cartridge With air purge, For IZS40-1120J, IZS41-1120J

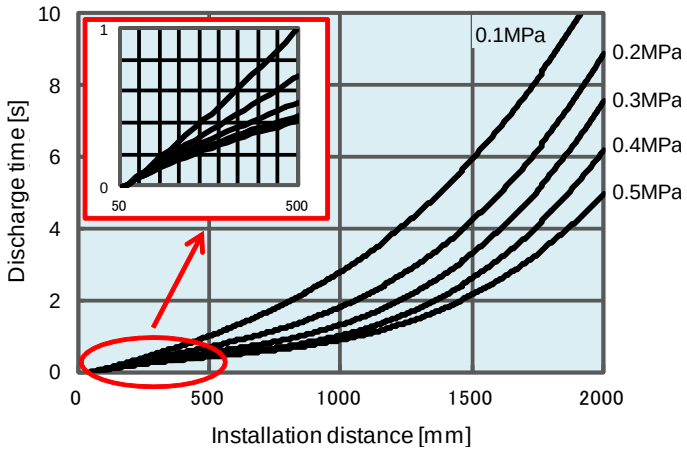

4) With Energy saving high-efficiency cartridge With air purge, For IZS40-1120V, IZS41-1120V

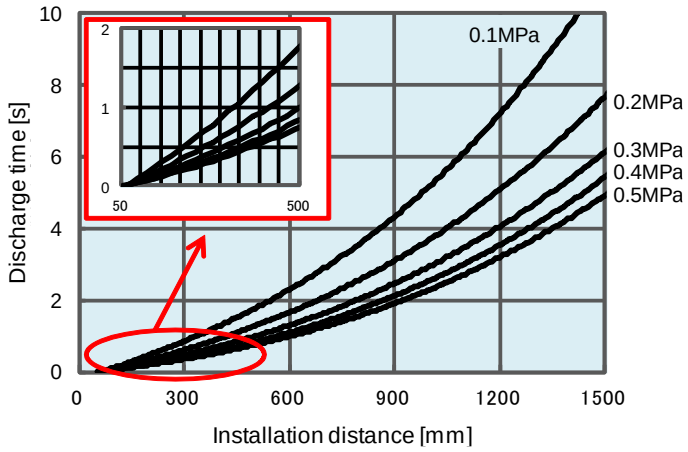

Applicable models: IZS41 with feedback sensor (The Installation height of the sensor is 25mm)

1) Without air purge
For IZS41-1120□/J/V-F

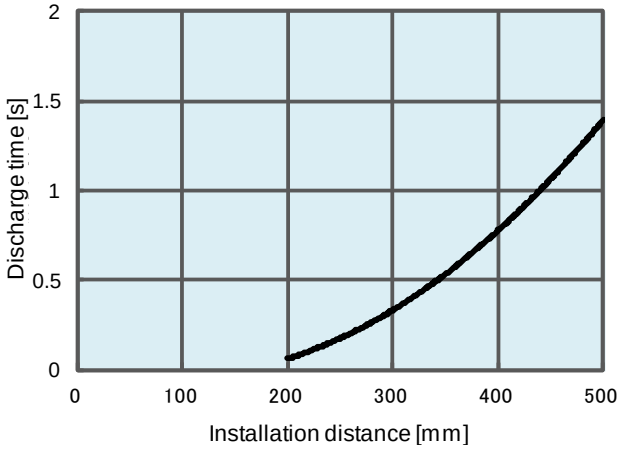

2) With High speed static neutralization cartridge With air purge, For IZS41-1120□-F

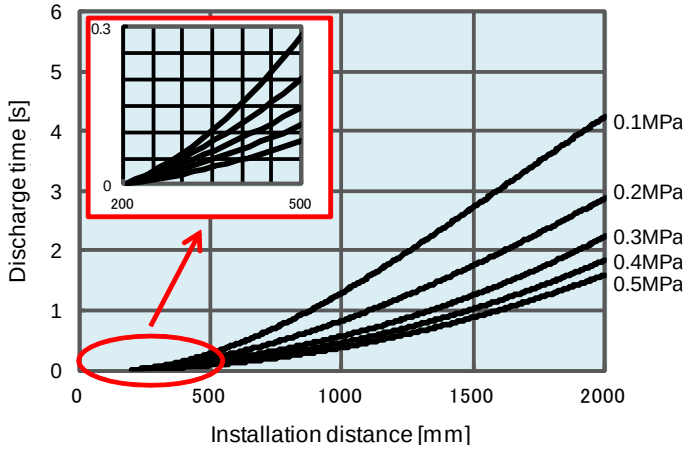

3) With Energy saving static neutralization cartridge
With air purge, For IZS41-1120J-F

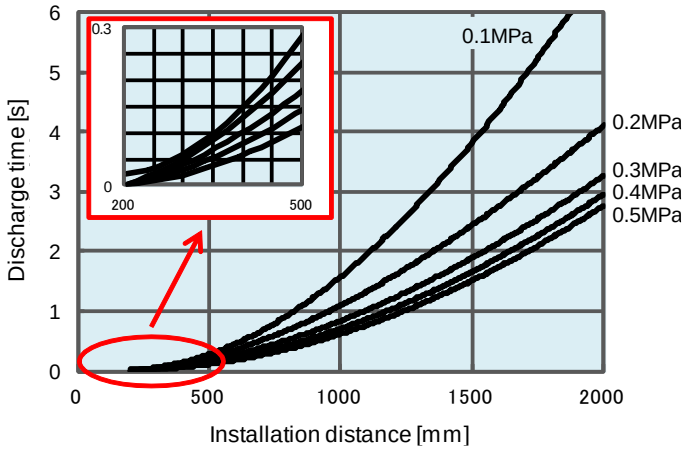

4) With Energy saving high-efficiency cartridge
With air purge, For IZS41-1120V-F

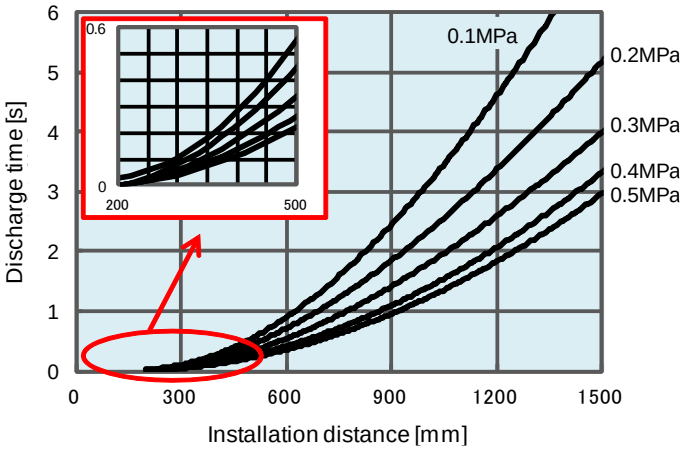

Applicable models: IZS42

1) Without air purge
For IZS42-1120□/J/V

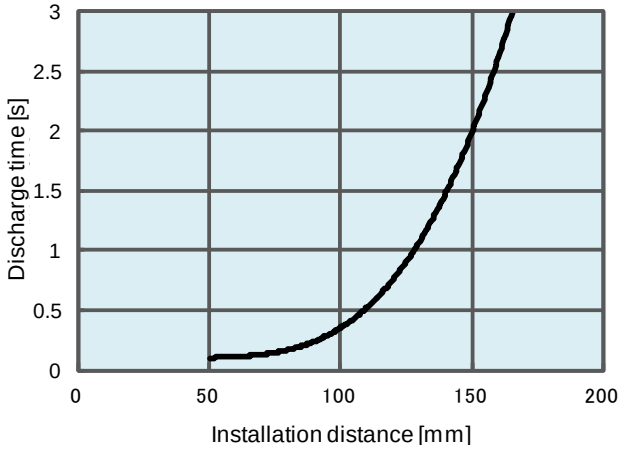

2) With High speed static neutralization cartridge
With air purge, For IZS42-1120□

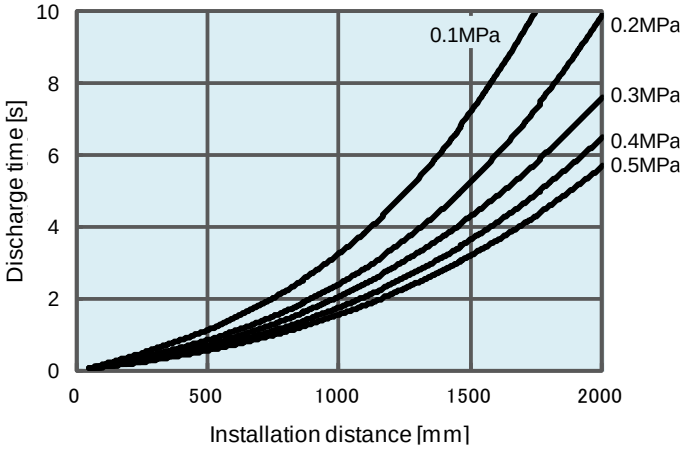

3) With Energy saving static neutralization cartridge
With air purge, For IZS42-1120J

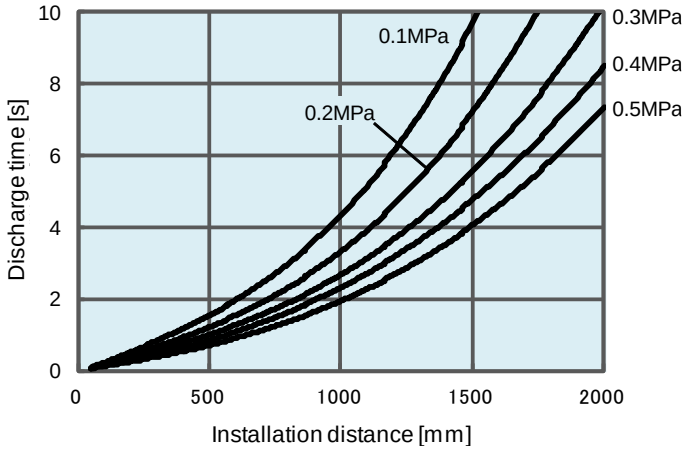

4) With Energy saving high-efficiency cartridge
With air purge, For IZS42-1120V

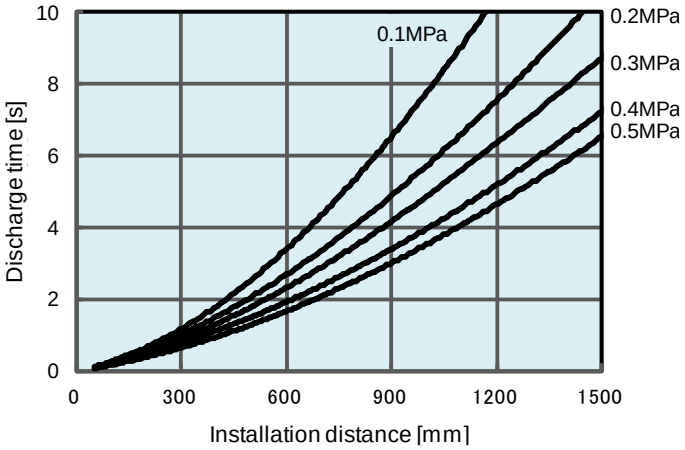

6-2. Potential Amplitude

Supply pressure: 0.3 MPa

Applicable models: IZS40, IZS41

1) With High speed static neutralization cartridge,
For IZS40-1120□, IZS41-1120□

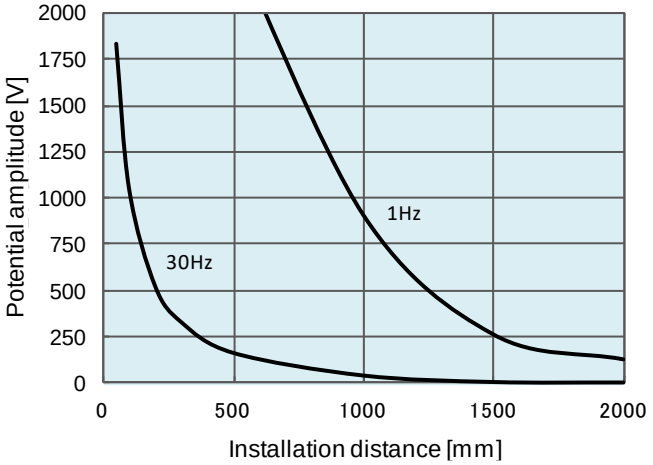

2) With Energy saving static neutralization cartridge
For IZS40-1120J, IZS41-1120J

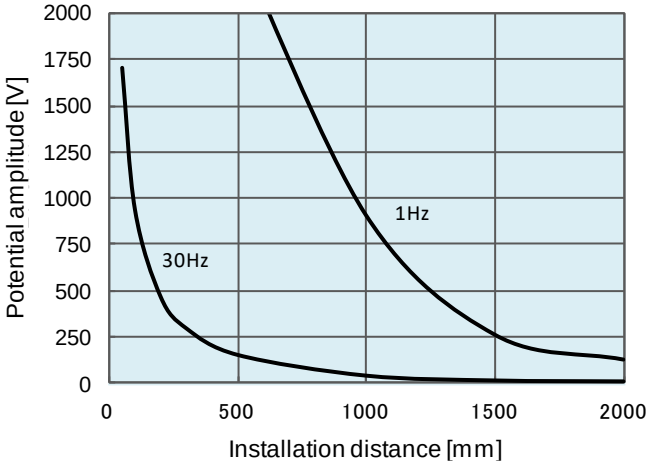

3) With Energy saving high-efficiency cartridge
For IZS40-1120V, IZS41-1120V

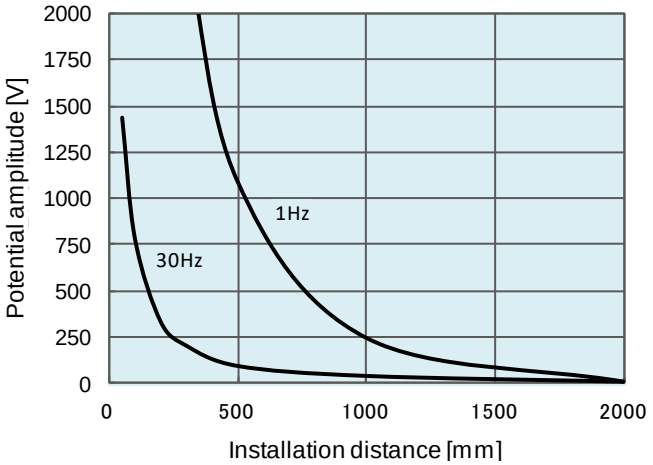

Applicable models: IZS42

2) With High speed static neutralization cartridge,
For IZS42-1120□

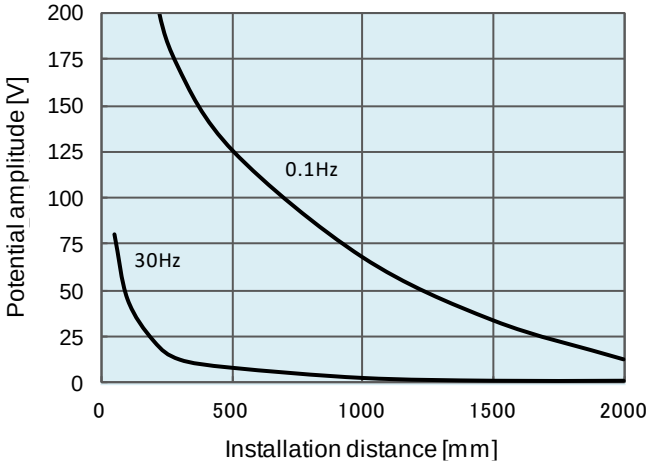

2) With Energy saving static neutralization cartridge
For IZS42-1120J

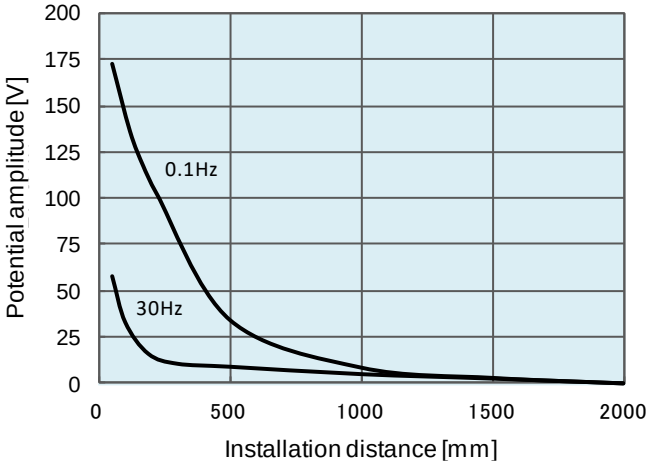

3) With Energy saving high-efficiency cartridge
For IZS42-1120V

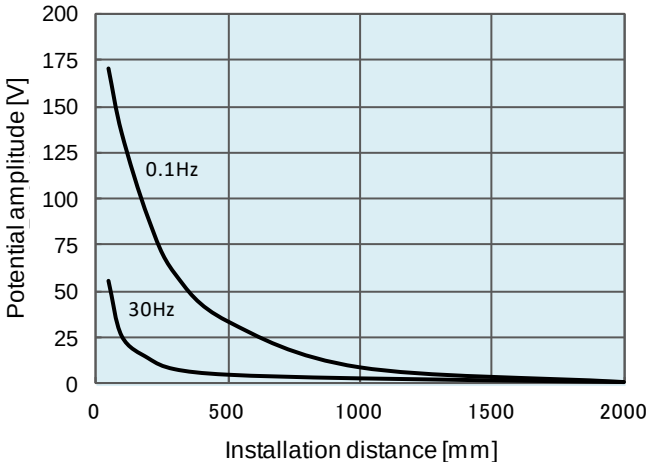

6-3. Static Neutralization Range

Frequency: 30Hz

Applicable models: IZS40, IZS41

1) Supply pressure: 0 MPa
For IZS40-1120□/J/V, IZS41-1120□/J/V

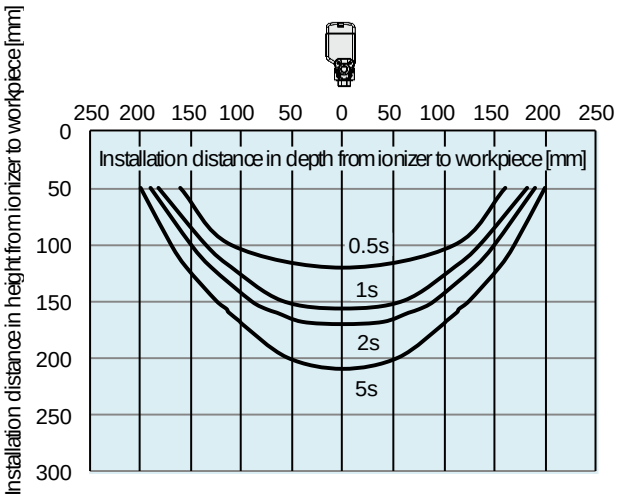

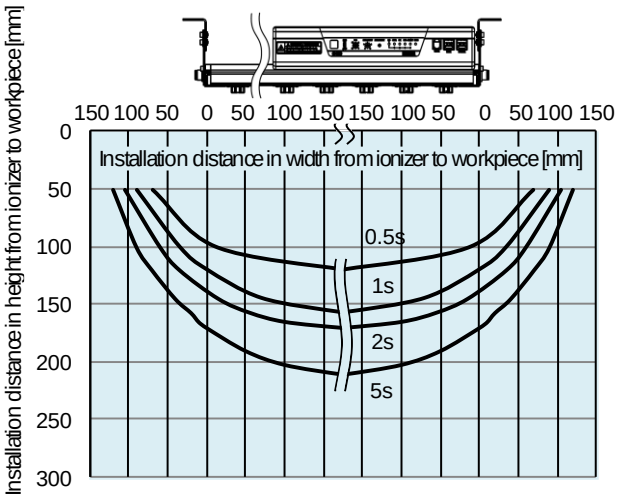

2) With High speed static neutralization cartridge, Supply pressure: 0.3 MPa
For IZS40-1120□, IZS41-1120□

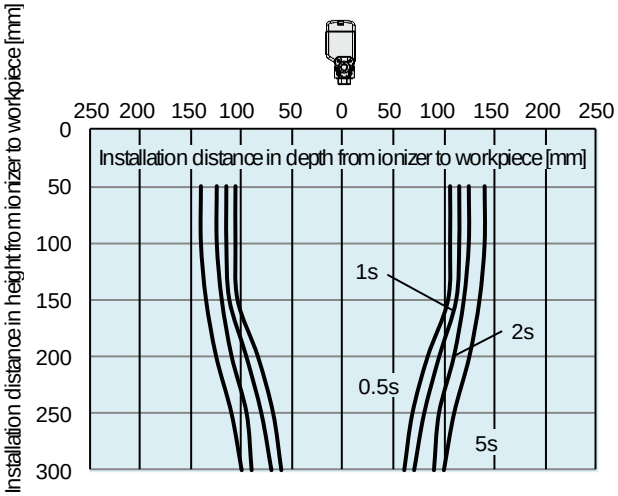

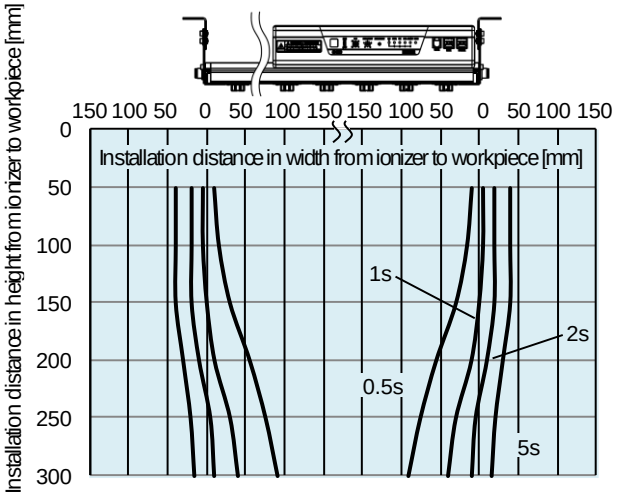

3) With Energy saving static neutralization cartridge, Supply pressure: 0.3 MPa
For IZS40-1120J, IZS41-1120J

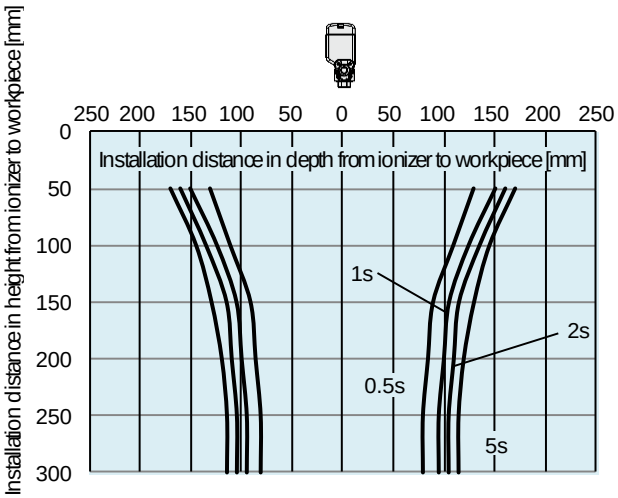

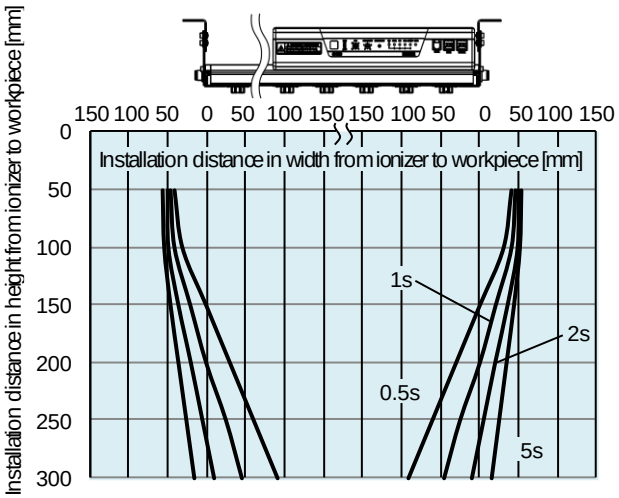

4) With Energy saving high-efficiency cartridge, Supply pressure: 0.3 MPa
For IZS40-1120V, IZS41-1120V

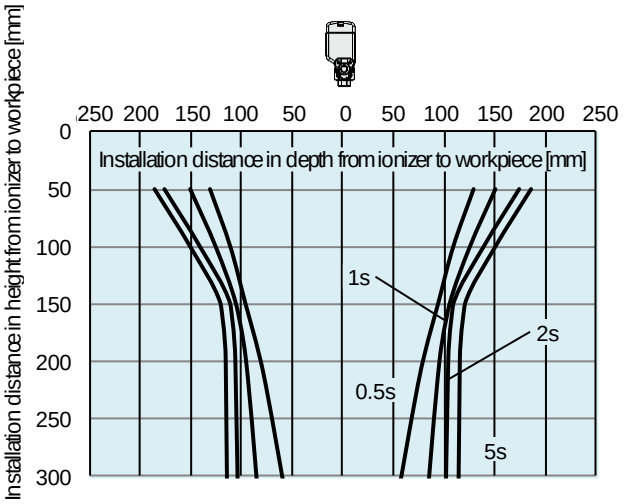

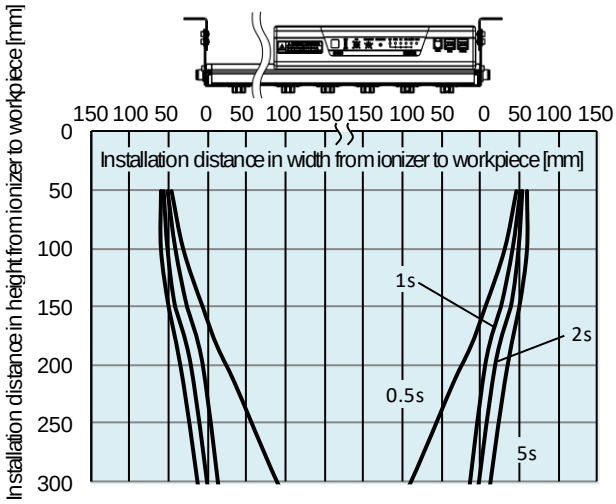

Applicable models: IZS42

1) Supply pressure: 0 MPa
For IZS42-1120□/J/V

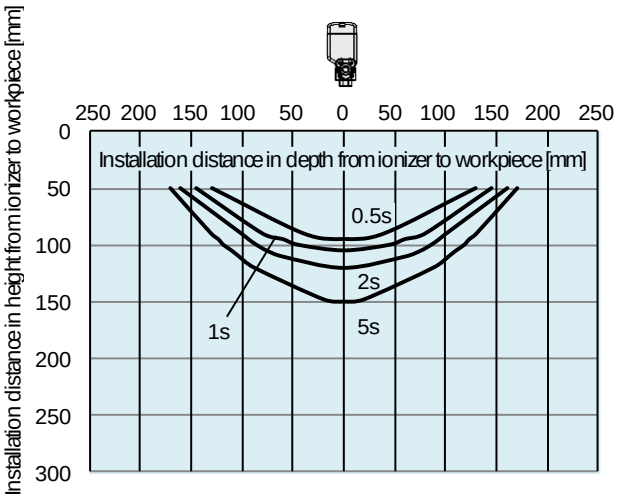

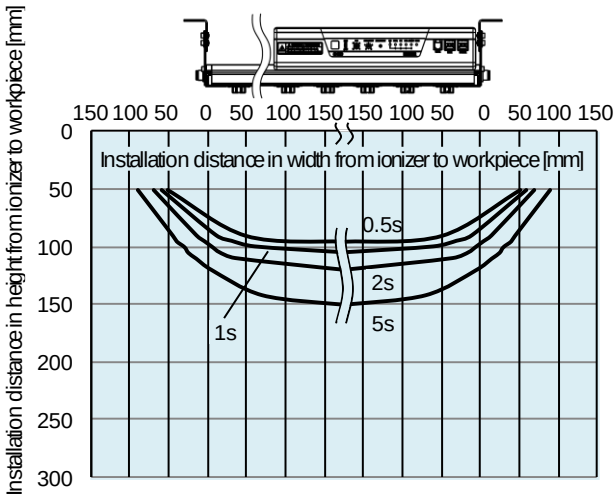

2) With High speed static neutralization cartridge, Supply pressure: 0.3 MPa
For IZS42-1120□

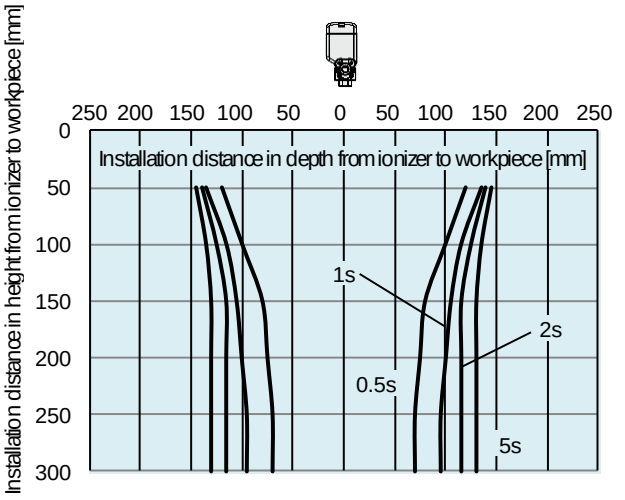

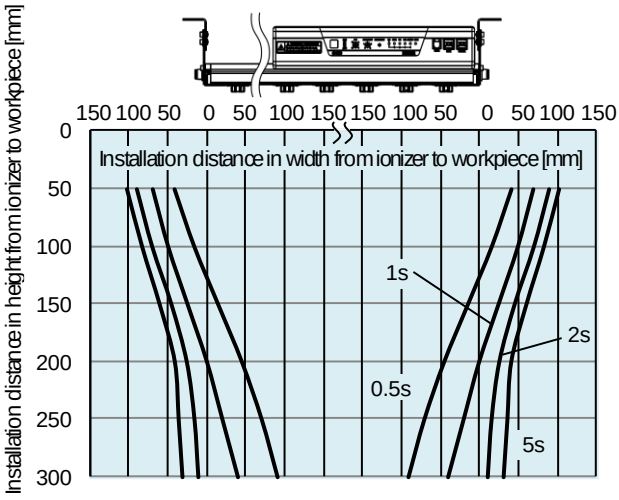

3) With Energy saving static neutralization cartridge, Supply pressure: 0.3 MPa
For IZS42-1120J

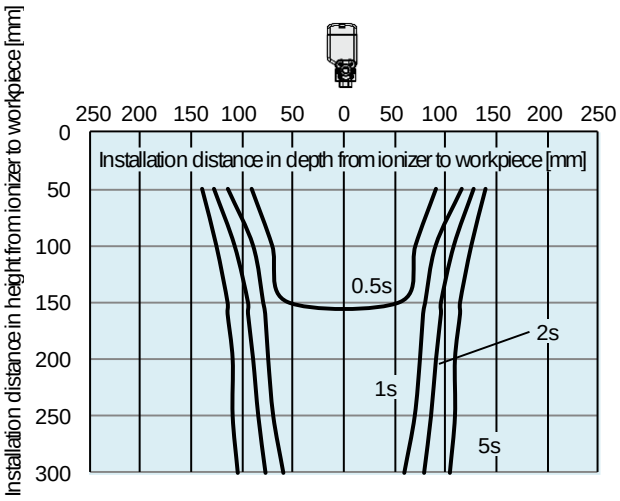

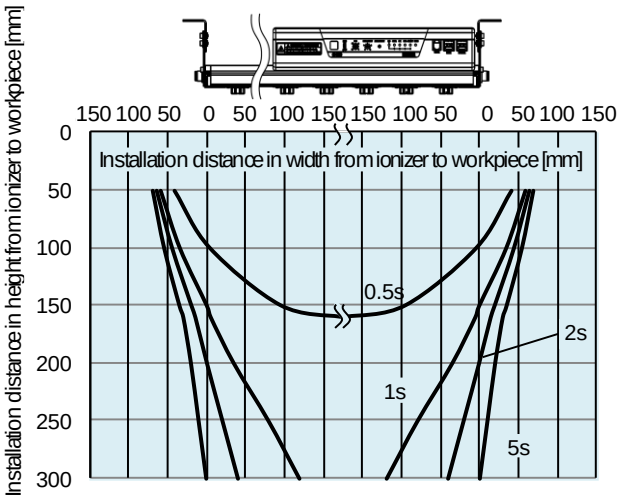

4) With Energy saving high-efficiency cartridge, Supply pressure: 0.3 MPa
For IZS42-1120V

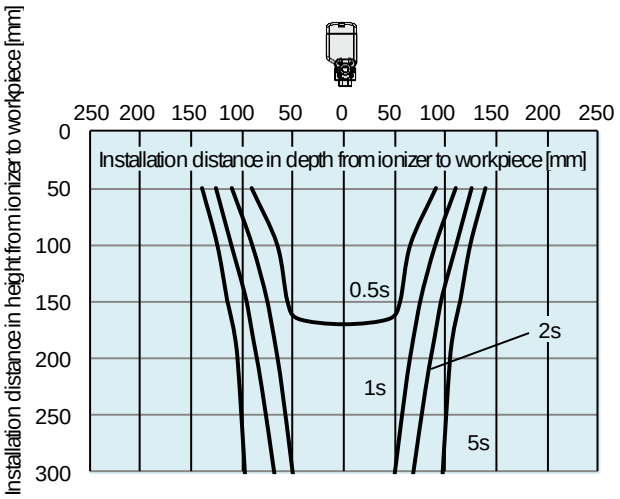

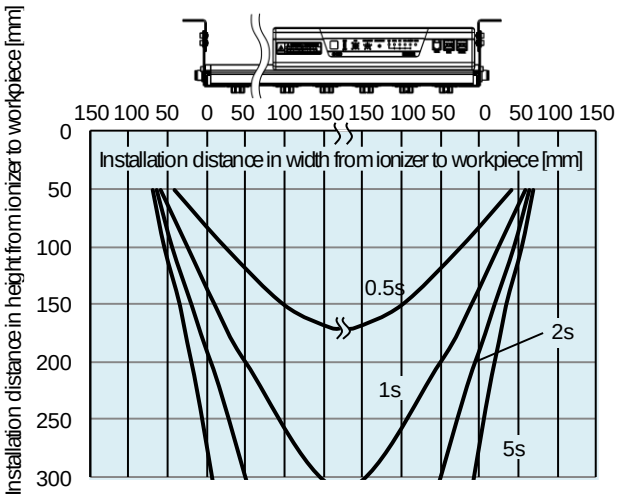

6-4. Discharge time and offset voltage at installation levels of feedback sensor

Applicable model: IZS41

It is recommended to install a feedback sensor at a level of 50mm or less. However, if the sensor is installed at a higher level than recommended, use the data shown below as reference.

With high speed static neutralization cartridge, Supply pressure: 0.1 MPa
(Per one cartridge: 8.6L/min (ANR))
Frequency: 30Hz
Ionizer installation distance: 600mm

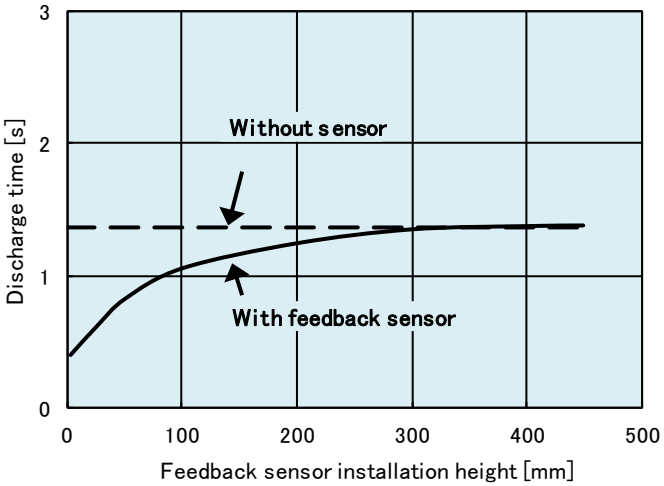

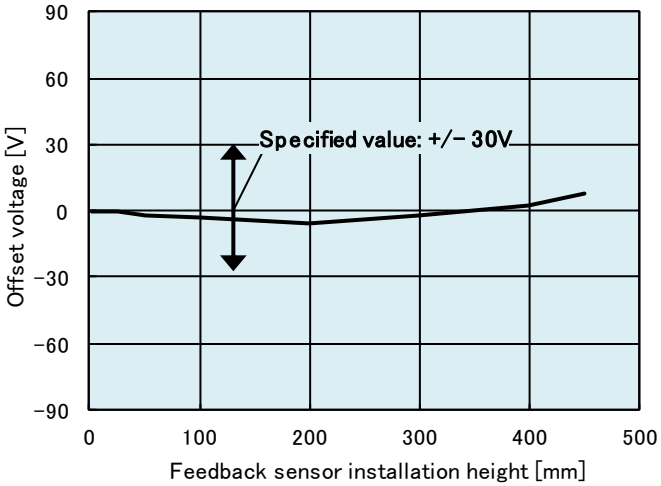

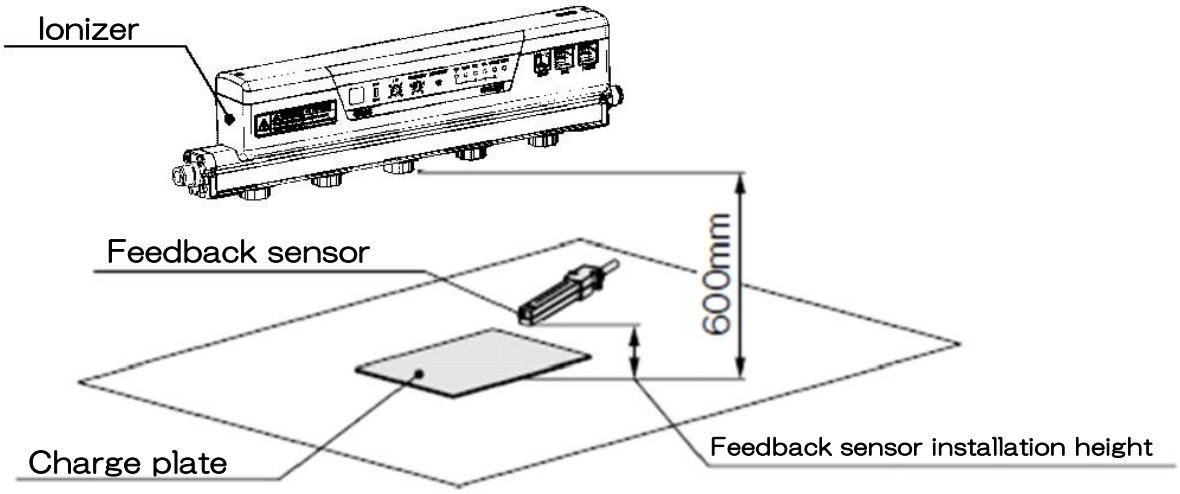

6-5. Flow - Pressure characteristics

1) With high speed static neutralization cartridge

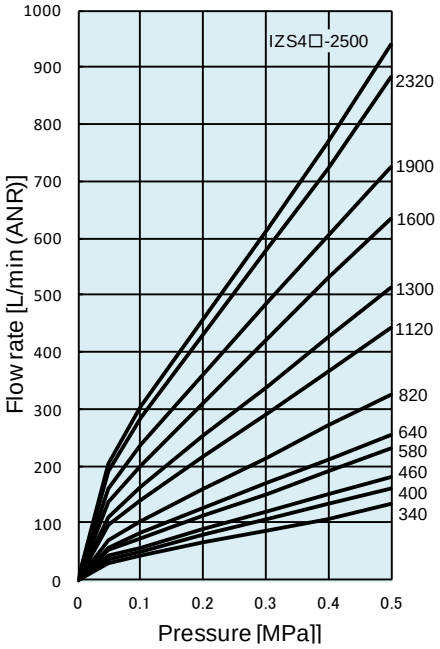

2) With Energy saving static neutralization cartridge

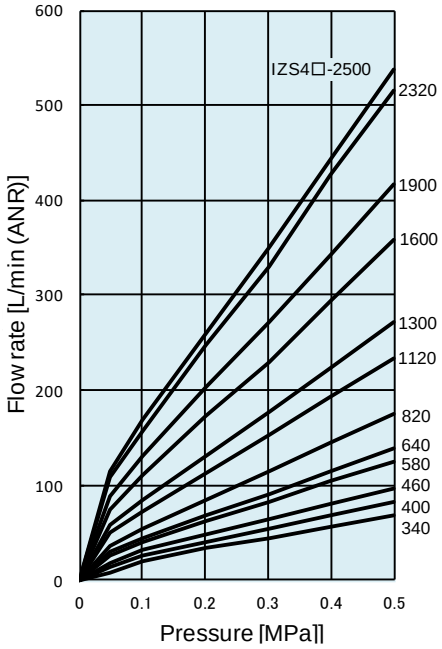

3) With Energy saving high-efficiency cartridge

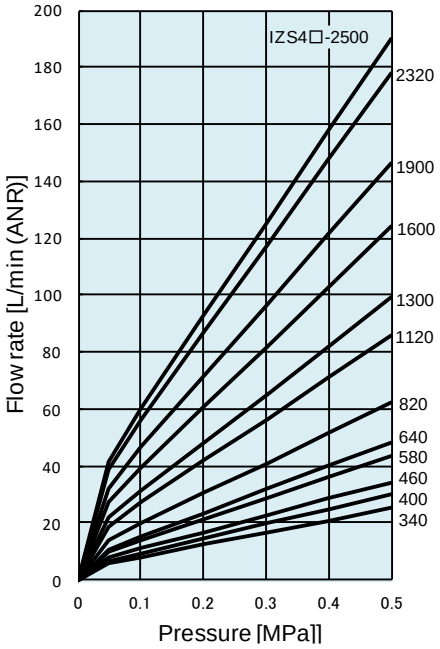

Measuring method schematic

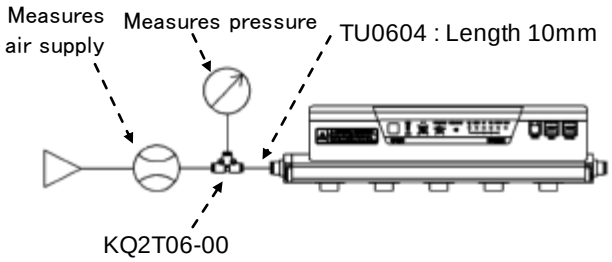

(a) Air supply from one side
(IZS4∗-340/ 400/ 460/ 580/ 640)

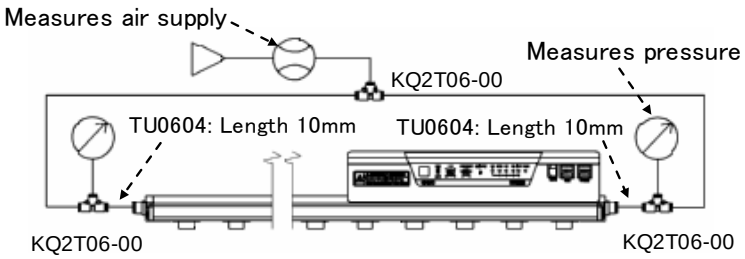

(b) Air supply from both sides
(IZS4∗-820/ 1120/ 1300)

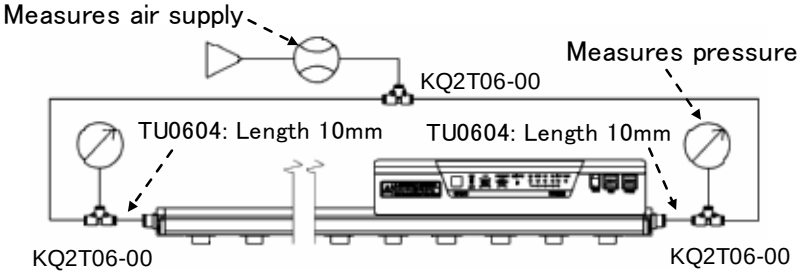

(c) Air supply from both sides
(IZS4∗-1600/ 1900/ 2320/ 2500)

7. Dimensions

Ionizer/ IZS40

n (No. of cartridge), L

Model	Symbol for bar length	n	L
IZS40	340	5	340
	400	6	400
	460	7	460
	580	9	580
	640	10	640
	820	13	820
	1120	18	1120
	1300	21	1300
	1600	26	1600
	1900	31	1900
	2320	38	2320
	2500	41	2500

A

Symbol for fitting	A (mm)
06	13
08	15
10	22

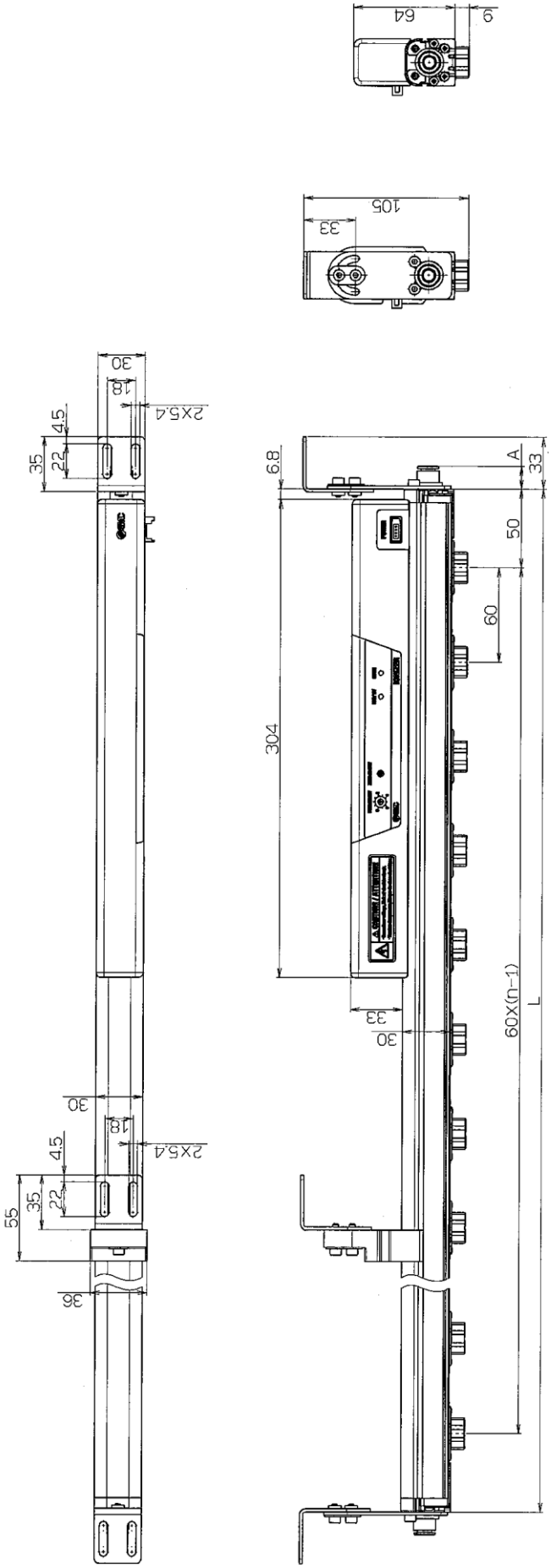

Ionizer/ IZS41, IZS42

n (No. of cartridge), L

Model	Symbol for bar length	n	L
IZS41 IZS42	340	5	340
	400	6	400
	460	7	460
	580	9	580
	640	10	640
	820	13	820
	1120	18	1120
	1300	21	1300
	1600	26	1600
	1900	31	1900
	2320	38	2320
	2500	41	2500

A

Symbol for fitting	A (mm)
06	13
08	15
10	22

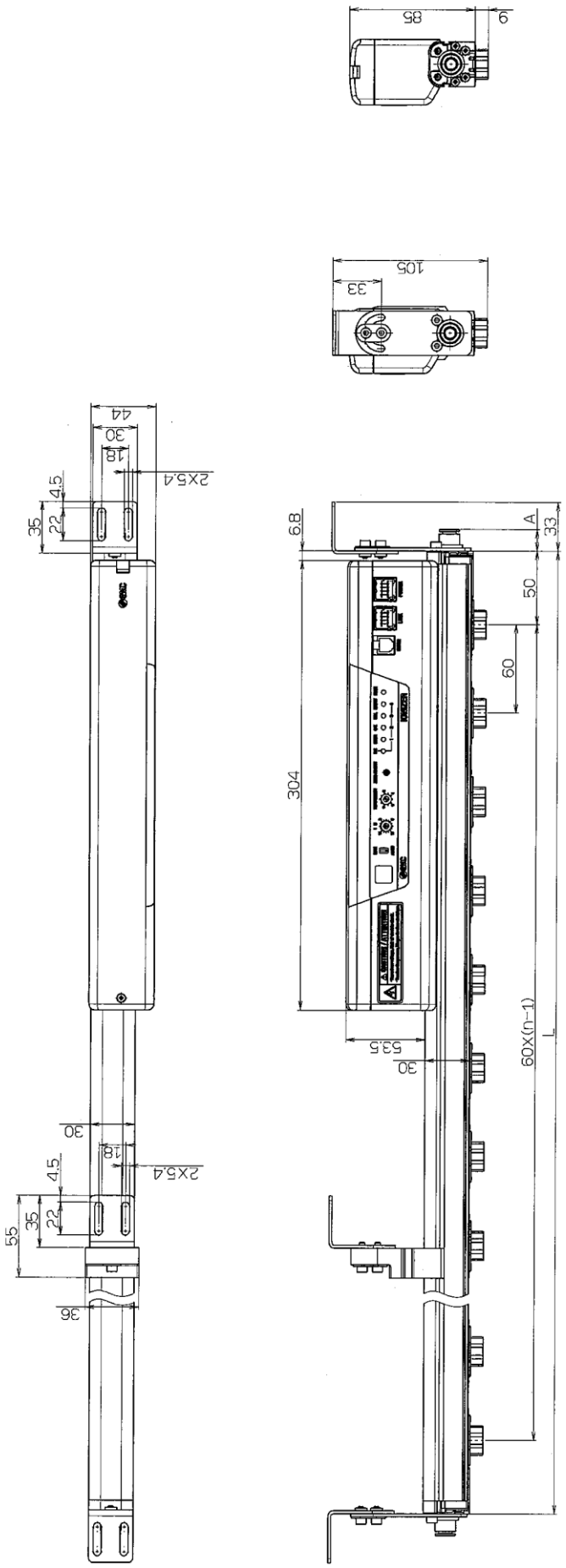

Feedback sensor/ IZS31-DF

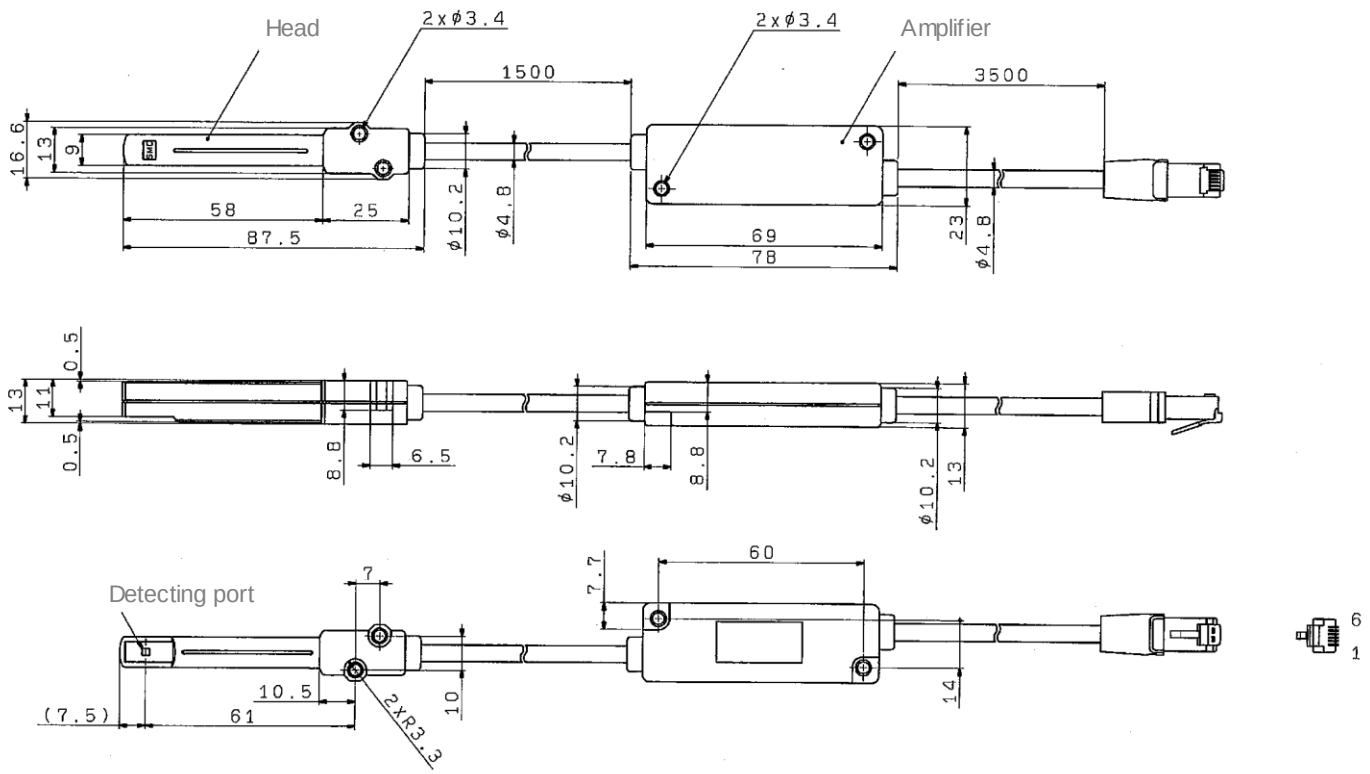

Auto balance sensor (high accuracy type)/ IZS31-DG

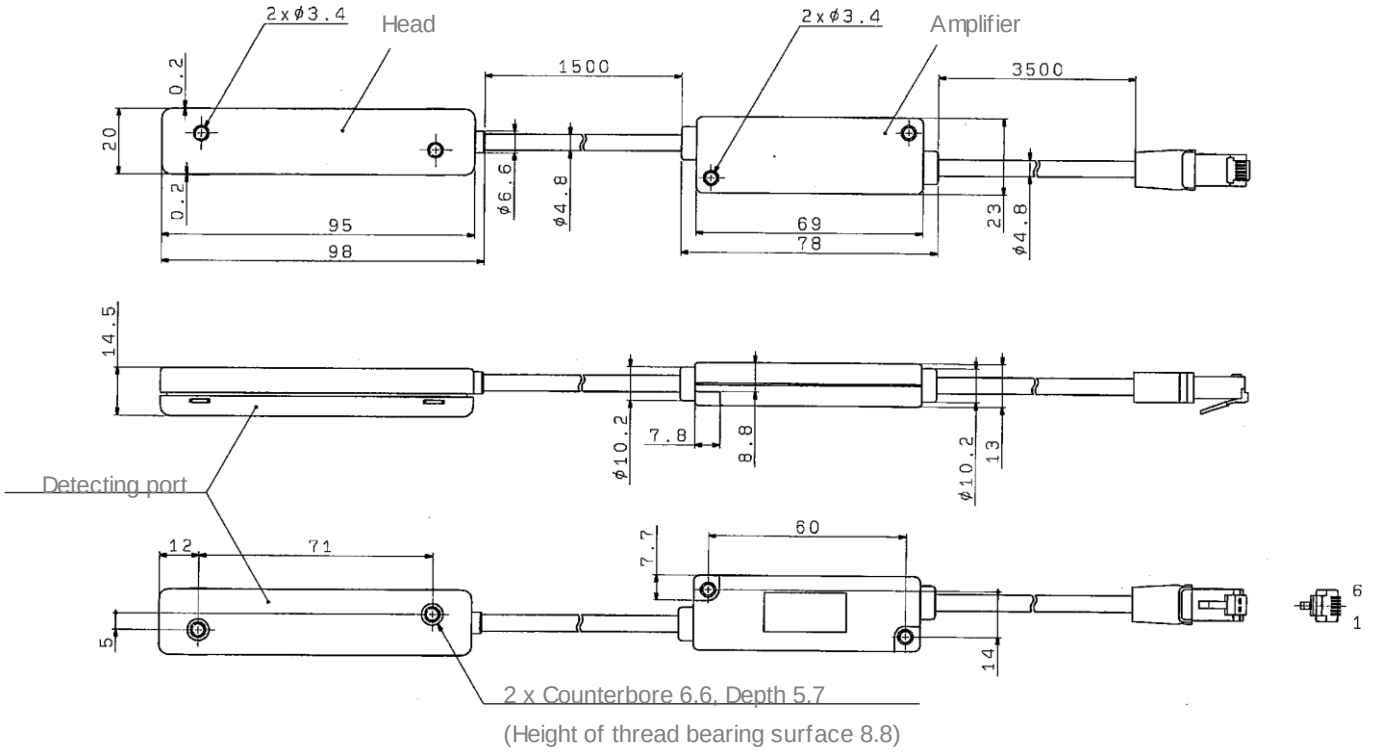

Power supply cable

IZS40-CP

Model	L(mm)
IZS40-CP	3000
IZS40-CPZ	9850

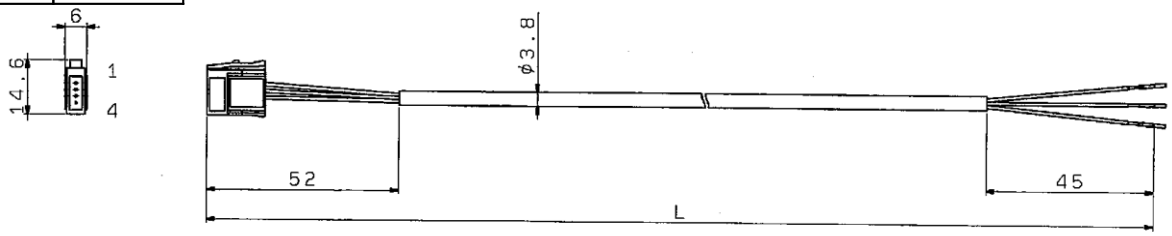

IZS41-CP

Model	L(mm)
IZS41-CP	3000
IZS41-CPZ	9850

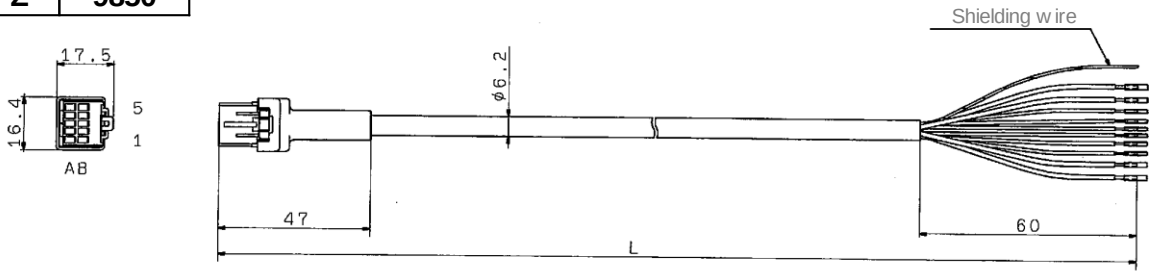

Transition wiri

Model	L(mm)
IZS41-CF02	2000
IZS41-CF05	5000
IZS41-CF08	8000

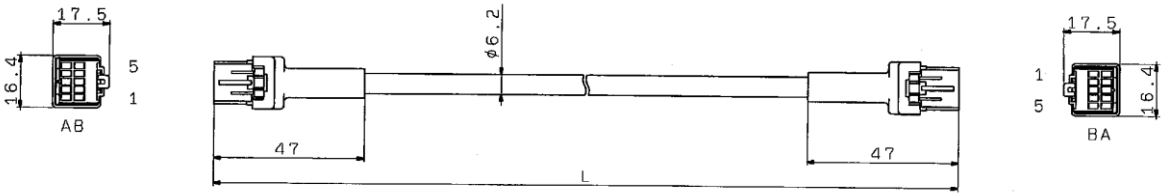

AC adapter

IZF10-CG1 (With AC cord)

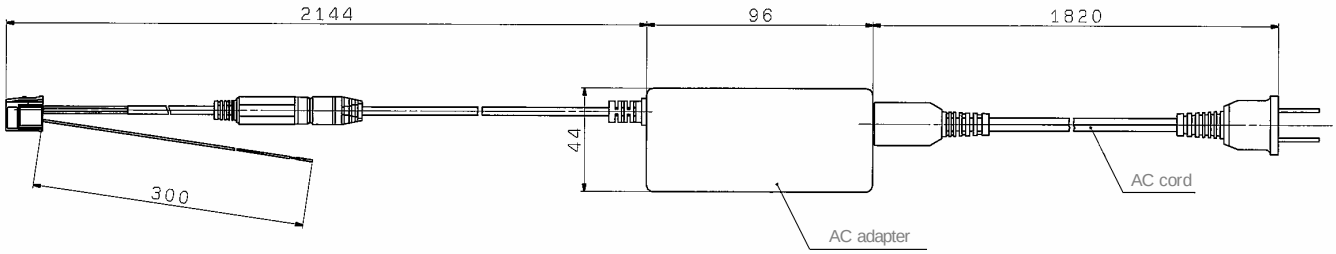

IZF10-CG2 (Without AC cord)

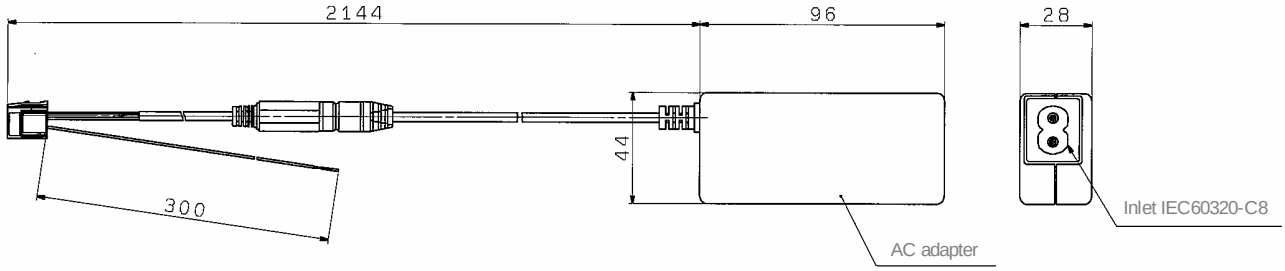

IZS41-CG1 (With AC cord)

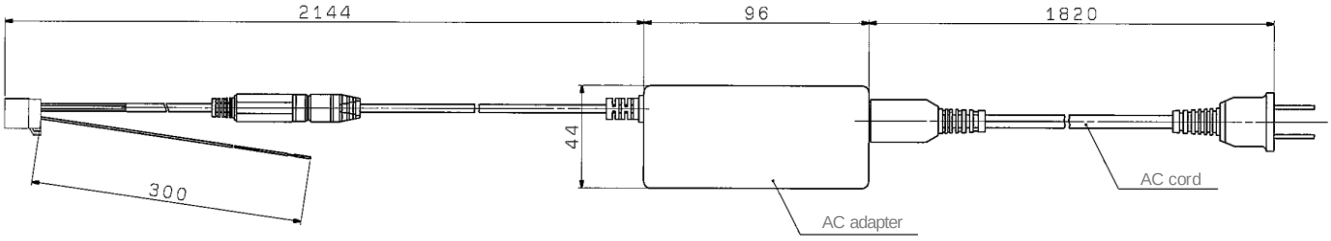

IZS41-CG2 (Without AC cord)

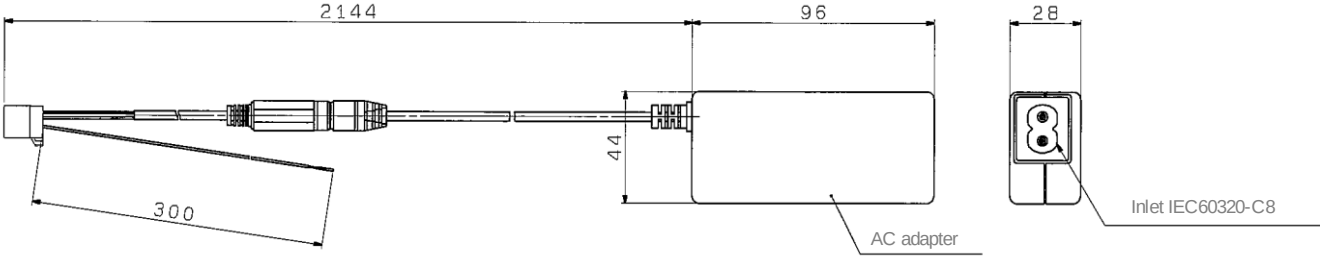

Remote controller/ IZS41-RC

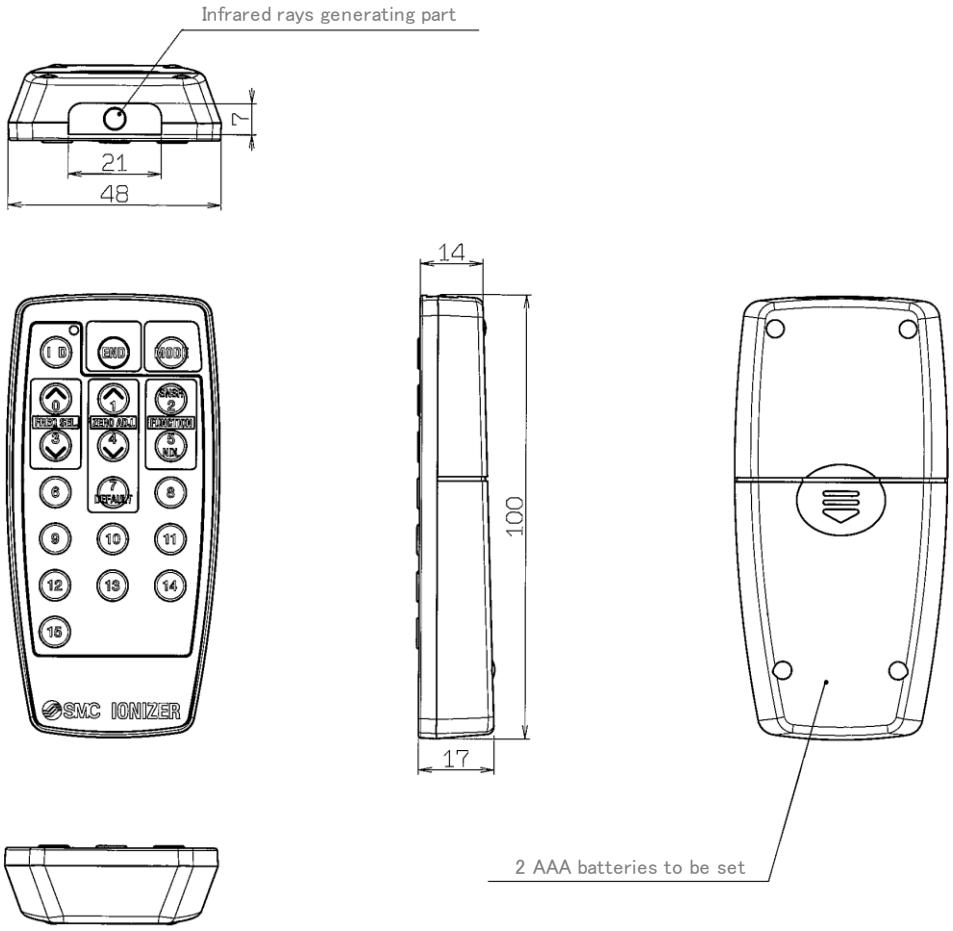

8. Specifications

Ionizer

Ionizer model		IZS40	IZS41-□□(NPN)	IZS41-□□P(PNP)	IZS42-□□(NPN)	IZS42-□□P(PNP)
Ion generation method		Corona discharge type				
Method of applying voltage		AC,DC	AC, Sensing AC, DC		Dual AC	
Applied voltage		+/ - 7,000 V			+/ - 6,000 V	
Offset voltage *1		Within +/ - 30 V				
Air purge	Fluid	Air (Clean, dry air)				
	Operating pressure	0.5 MPa or less				
	Proof Pressure	0.7 MPa				
	Connecting tube size	Metric size: ø4, ø6, ø8, ø10 Inch size: ø3/16", ø1/4", ø5/16", ø3/8"				
Current consumption		330 mA or less	440 mA or less (sensing AC, Automatic operation/ Manual operation: 480 mA or less)		700 mA or less (Automatic operation/ Manual operation: 740 mA or less)	
Power supply voltage		21.6 to 26.4 VDC (Within 24 VDC +/ - 10%)				
Power supply voltage in a transition wiring		–	24 VDC to 26.4 VDC			
Input signal	Discharge stop signal Maintenance detection signal	–	Connected to 0V Voltage range: 5 VDC or less Current consumption: 5mA or less	Connected to +24 V Voltage range: 19 VDC to Power supply voltage Current consumption: 5 mA or less	Connected to 0 V Voltage range: 5 VDC or less Current consumption: 5 mA or less	Connected to +24 V Voltage range: 19 VDC to power supply voltage Current consumption: 5 mA or less
Output signal	Maintenance detection signal Error signal	–	Max. load current: 100 mA Residual voltage 1 V or less (Load current at 100 mA) Max. applied voltage: 26.4 VDC	Max. load current: 100 mA Residual voltage 1 V or less (Load current at 100 mA)	Max. load current: 100 mA Residual voltage 1 V or less (Load current at 100 mA) Max. applied voltage: 26.4 VDC	Max. load current: 100 mA Residual voltage 1 V or less (Load current at 100 mA)
Function		Incorrect high voltage ion discharge detection (Ion discharge stops during detection)	Offset voltage control with the built-in sensor, maintenance detection, incorrect high voltage ion discharge detection (stops discharge during detection), ion discharge stop input, transition wiring, remote controller (sold separately), external sensor connection			
Effective static neutralization distance		50 to 2000 mm	50 to 2000 mm (Sensing AC mode: 200 to 2000 mm, Manual operation/ Automatic operation: 100 to 2000 mm		50 to 2000 mm (Manual operation / Automatic operation: 100 to 2000 mm)	
Ambient and fluid temperature		0 to 40 °C				
Ambient humidity		35 to 80 % RH (with no condensation)				
Material		Body cover: ABS, Emitter cartridge: PBT, Emitter: Tungsten, Single crystal silicon				
Impact resistance		100 m/ s^2				
Standards/Directive		CE (EMC directive, RoHS directive),UKCA, cUL（UL867、C22.2 No.187）*2				

*1: With air purge at a distance of 300 mm between the workpiece and ionizer *2:With bracket

Number of emitter cartridges, Weight

Symbol for bar length		340	400	460	580	640	820	1120	1300	1600	1900	2320	2500
No. of cartridge		5	6	7	9	10	13	18	21	26	31	38	41
Weight (g)	IZS40	590	640	690	790	830	980	1220	1360	1600	1840	2170	2320
	IZS41	740	790	840	940	980	1130	1370	1510	1750	1990	2320	2470
	IZS42	860	910	960	1060	1100	1250	1490	1630	1870	2110	2440	2590

External sensor

External sensor model	IZS31-DF (Feedback sensor)	IZS31-DG (Auto balance sensor [high accuracy type])
Ambient temperature	0 to 50 °C	
Ambient humidity	35 to 85% Rh (no condensation)	
Case material	ABS	ABS, Stainless steel
Shock resistance	100 m/s^2	
Weight	200g (including cable weight)	220g (including cable weight)
Installation distance	10 to 50 mm (Recommended)	-
Applicable standards	CE, UL, CSA	

AC adapter

Model	IZF10-CG∗, IZS41-CG∗
Input voltage	100VAC to 240VAC, 50/ 60Hz
Output voltage	24VDC +/-5%
Output current	1A
Ambient temperature	0 to 40 ºC
Ambient humidity	35 to 65% Rh (With no condensation)
Weight	220g
Standards/ Directive	CE, UL,CSA

Remote controller

Model	IZS41-RC
Type	Infrared ray type
Transmission capacity	5m (Varies depending on the operating conditions and environment)
Power supply	2 AA A sized batteries
Ambient temperature	0 to 45 ºC
Ambient humidity	35 to 80% Rh (With no condensation)
Weight	33g (excluding dry cell batteries)
Standards/ Directive	CE

9. Troubleshooting

Fault	Model			Details	Possible Cause	Investigation method and possible cause	Countermeasures
	IZS40	IZS41	IZS42				
Product does not operate	O	O	O	No power ("MAIN" LED is OFF.)	Power supply incorrectly wired	Check the power supply wiring. Check whether both brown wires are connected to 24 VDC and both blue wires are connected to 0V.	Ensure all connections are in accordance with [2. Wiring]
	O	O	O	"MAIN" LED only is flashing	Power supply voltage is out of range	Check the power supply input is within the range of 24 VDC +/-10%.	Ensure the power supply is in the range 24 VDC +/- 10%.
	O	O	O	"MAIN", "ION / HV" (red), "NDL", "RC", "SNSR" (red) and "OK" LEDs are all flashing	CPU malfunction caused by noise	1) Check if there is any high current equipment installed near the ionizer 2) Check if the power supply cable is routed together with any high power cables	1) If any high current equipment is nearby, either move it away or consider an alternative location for the ionizer. 2) Route the ionizer wiring separately to high power cables. 3) Install a filter to the ionizer power supply.
	O	O	O	"ION / HV" LED is red	Abnormal high voltage discharge	1) Check the emitter for contamination. 2) Check whether there is arcing between the ionizer and workpiece to be neutralized. 3) Check whether the ionizer is used in an environment subject to condensation or moisture.	1) Clean the emitter if there is any contamination present. *1 2) If there is arcing between the workpiece to be neutralized and the ionizer, increase the distance between them until arcing no longer occurs. 3) The ionizer must not be used in environments subject to condensation or moisture.
	-	O	O	"SNSR" LED is red	1) Sensor connection problem 2) Failed sensor	1) Check the sensor cable for damage. 2) Check if a whining noise can be heard from the detection port of the sensor.	1) If the sensor cable is damaged it should be repaired or replaced. 2) If there is no sound from the sensor, it is likely to have failed and should be replaced.
No output signal	-	O	O	No output signal	Output circuit wired incorrectly	Check the output specifications (NPN/PNP) and wiring of yellow and purple wires	Ensure all connections are in accordance with [2. Wiring]
	-	O	O	"ION / HV" LED is flashing green	Output circuit wired incorrectly (over current)	Check the output specifications (NPN/PNP) and wiring of yellow and purple wires	Ensure all connections are in accordance with [2. Wiring]
Unable to input a signal	-	O	O	Unable to input a signal	Input circuit wired incorrectly	Check the input specifications (NPN/PNP) and wiring of the light green and grey wires	Ensure all connections are in accordance with [2. Wiring]
No/poor neutralizing performance	O	O	O	Poor offset voltage	Offset voltage not adjusted correctly	Check the offset voltage with an instrument such as a charged plate monitor.	Adjust the offset voltage with the trimmer labelled "ZERO ADJUST" on the front panel.
	O	O	O	Emitter is contaminated.	Reduction of ion generation due to dust or contamination on the emitter	Check the emitter for contamination	Clean the emitter if there is any contamination present. * 1
	O	O	O	Emitter is bent, chipped or worn	Reduction of ion generation due to bending, chipping or wear of the emitter	Examine the emitter tip with a magnifier	Replace the emitter cartridge.
	-	O	O	"NDL" LED is ON (when electrode contamination detection signal is input)	1) Dust or other contamination on the emitter 2) Emitter is worn or damaged.	1) Check the emitter for contamination. 2) Examine the emitter tip with a magnifier.	1) Clean the emitter* 1 2) Replace the emitter cartridge.
		O	O	"NDL" LED is ON (during manual or auto operation)	1) Dust or other contamination on the emitter 2) Emitter is worn or damaged. 3) Generated ions are not reaching the sensor	1), 2) Examine the emitter tip with a magnifier. 3) Ions can be absorbed by an enclosure or walls surrounding or close to the ionizer. An external airflow could interfere with the flow of ionized air from the ionizer.	1) Clean the emitter* 1 2) Replace the emitter cartridge. 3) If there is an object that absorbs ions near the ionizer or sensor, move it away. If external air flow is having an effect, shut off the air flow, so that ions can reach the sensor.
	-	O	O	"ION / HV" LED is OFF.	Discharge stop signal is being input.	Check whether the discharge stop signal (light green wire) is being input.	When performing static neutralization, do not input the discharge stop signal.
	O	O	O	Ionized air is not reaching the workpiece to be neutralized	1) Compressed air flow insufficient 2) Interference with air flow	1) Check that the supply pressure and flow rate are sufficient. 2) Check if an external air flow could interfere with the flow of ionized air from the ionizer.	1) If flow rate is insufficient, increase the supply pressure or alter the piping circuit to improve airflow. (Refer to [2. Installation]) 2) If an external airflow is having an effect, consider shutting off the air flow or otherwise changing the installation so that ionized air is not interfered with.
	O	O	O	There are obstacles/obstructions between the workpiece to be neutralized and the ionizer.	Ionized air blocked or absorbed by obstacles	Check that there are no obstacles which could absorb ions on the path used for supplying ionized air to the workpiece to be neutralized.	Objects between the ionizer and workpiece to be neutralized will block off or absorb the ionized air. Ensure there are no objects between, or near to, the ionizer and workpiece to be neutralized.
	O	O	O	Two or more ionizers are installed close to each other.	Interference with ionized air	Check if ionized air from nearby ionizers is interfering with that of the main ionizer, by starting and stopping the nearby ionizers and seeing if the performance of the main ionizer is affected.	If ionizers are installed close together, they may interfere with each other, and cause a decrease in performance. Refer to [Safety instruction, installation].
	O	O	O	No F.G. connection	Incorrect voltage reference	Check whether F.G. (green wire) is connected.	The ionizer neutralizes static electricity relative to ground; ensure the green wire always has a ground connection of less than 100Ω.

*1. Clean the emitters with the cleaning kit or cotton wool soaked in alcohol approximately every two weeks. The required frequency of cleaning will vary depending on the local environment, so should be set in the user's application.

10. Maintenance

Warning

A high voltage generating circuit is mounted onto this product. Verify that the power supply is OFF when performing maintenance. When compressed air is supplied to the product, shutoff the supply before performing any maintenance operation. Never disassemble or modify the product, as this can cause loss of product functionality, and a risk of electric shock and earth leakage. Do not touch the end of the emitters. Emitters have a sharp end and touching them directly with your fingers may cause injury.

Only people who have sufficient knowledge and experience are allowed to clean the emitters.

If the ionizer is used for an extended period of time, contamination such as dust, can stick to the emitters, reducing the static neutralization performance.

IZS41 and IZS42 have an maintenance detecting function. When dirt is detected, clean the emitters. In cases where the maintenance detecting function is not used on the IZS41 or IZS42 or when using the IZS40 which does not have a contamination detecting function, periodically test the static neutralization performance of the ionizer. It is highly recommended that a periodic maintenance cycle be established. This will prevent contamination buildup on the emitters which may vary depending on the installation environment, supply pressure, etc.

If the maintenance detection signal is output upon completion of cleaning the emitter, it may not have been cleaned sufficiently or it may be worn or damaged. If wear or damage of the emitter is detected, replace the emitter cartridge with a new one. (If the emitter is worn out or damaged, the static neutralization performance will decrease.)

Cleaning procedure of the emitter

It is highly recommended that the cleaning kit (IZS30-M2) is used to clean the emitters.

a. Before cleaning the emitters, shutoff the power and air supply.

b. The emitters may be cleaned with the emitter cartridges mounted to the bar or with the cartridges removed from the bar.

Refer to "Removal procedure of emitter cartridge" shown below for instructions on how to remove the cartridges.

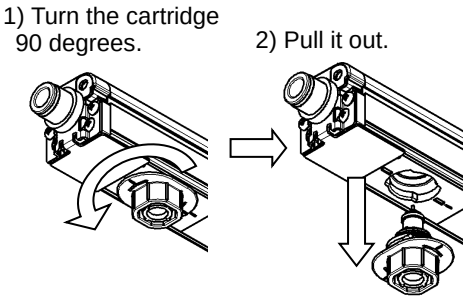

Removal procedure of emitter cartridge

c. The cleaning kit (IZS30-M2) has felt at one end of the tool and rubber-bonded whetstone at the other end of the tool.

Cleaning kit
(IZS30-M2)

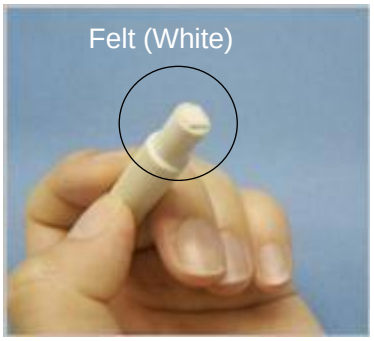

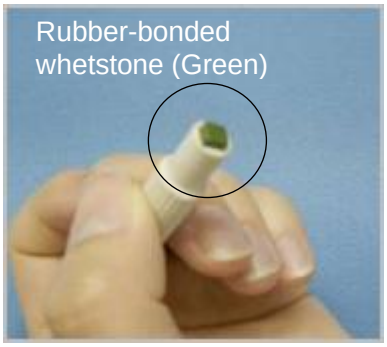

Saturate the felt end of the emitter cleaning kit with alcohol and insert it into the back of the emitter cartridge. Turn the tool for several rotations to thoroughly remove dirt.

If it is not possible to thoroughly remove the dirt using the felt end of the cleaning kit, the rubber-bonded whetstone should be used in the same procedure as described for that of the felt end.

If you do not have a cleaning kit, an alcohol saturated cotton ball can be used for cleaning the emitters. Use caution to prevent damage to the emitters. (It is highly recommended to use the emitter cleaning kit.)

The alcohol used should be reagent ethanol class 1 99.5vol% or more.

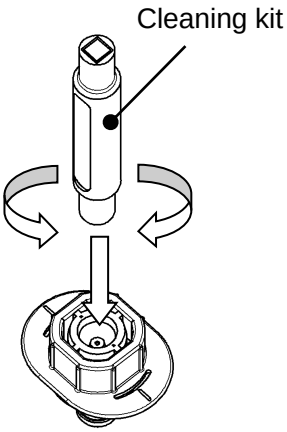

d. When the emitter cartridges are removed for cleaning, remount them to the ionizer according to the "Mounting procedure of emitter cartridge" shown below. Make sure that the cartridges are securely mounted. If not, the cartridges may become dislodged when compressed air is supplied to the ionizer.

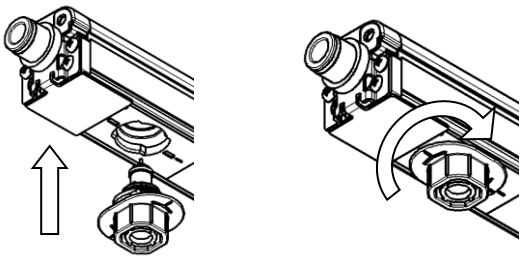

1) Insert the cartridge into the bar so that the longer side of the cartridge is mounted at a right angle to the bar.

2) Rotate the cartridge 90 degrees to match the markings on the bar to those on the cartridge and secure.

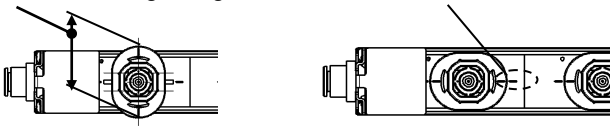

Mounting procedure of emitter cartridge

e. Confirm that the static neutralization performance is maintained after cleaning and remounting of the cartridges are completed.

Replacement of the felt or rubber-bonded whetstone tips of the cleaning kit

The felt or rubber-bonded whetstone tips should be replaced when it becomes dirty, as it will not sufficiently clean the emitters.

a. Remove the felt or the rubber-bonded whetstone tip at the end of the cleaning kit.

Removing the felt

b. Insert a new felt or rubber-bonded whetstone tip into the cleaning kit using the reverse procedure as the removal. The felt and the rubber-bonded whetstone tips are rectangular, and the inserting orientation is specified. The end of the rubber-bonded whetstone tip will stick out of the cleaning kit end for 1mm. Do not push it in too much.

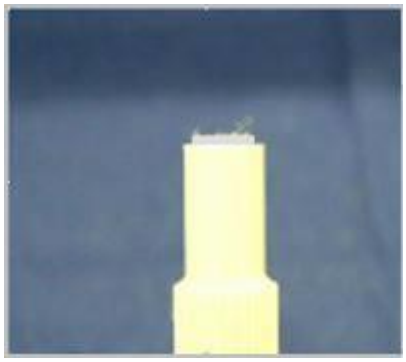

Cleaning kit with felt

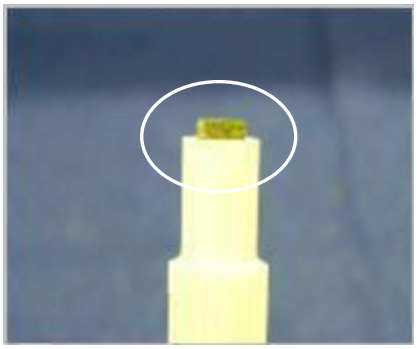

Cleaning kit with rubber-bonded whetstone

Part number for spare felt/ rubber-bonded whetstone tips

Part	Part number	Qty.
Spare felt	IZS30-A0201	10pcs
Spare rubber-bonded whetstone	IZS30-A0202	1pcs

Revision history
Revision A (Dec 4, 2012) The "Recommended piping bore size" table (p9) The "One-touch fitting selection (Non-standard bar length)" table (p14) The note (p27 to p31) Addition of "9. Troubleshooting" (p62) Revision B (May 28, 2013) The note (p8) The electrode cleaning kit (p13) Removal of the description about cleaning from (p39), and addition of "10. Maintenance" (p63) Revision C (April, 13, 2016) The "2) Do not use this product in an enclosed space" (p7) The "AC adapter" (p61) Revision D (November, 14, 2019) Addition of "Energy saving high-efficiency cartridge" (p9, p10, p14, p47 to p54) Revision E (December, 28, 2022) The section1 of Caution (p6), and cUL compliance addition of "8. Specifications" (p60) Revision F (March.27.2024) The Safety Instructions. (p3, p4) The words deleted. (Consult SMC before hand when using this product for other intentions (See Warning No. 4 on page 4.) (p5) The words deleted. (If fluid other than compressed air is used, consult SMC.) (p5) The back cover. (p66)

SMC Corporation

Tel: + 81 3 5207 8249 Fax: +81 3 5298 5362
URL https://www.smcworld.com