Document No.AMX-OMZ0106

Operation Manual

PRODUCT NAME

Antibacterial Filter (5μm)
Antibacterial Filter (0.1μm)
Odor Removal Filter
Bacteria Removal Filter

MODEL / Series / Product Number

HF2-BFA
HF2-BFB
HF2-BFC
HF2-BFD

SMC Corporation

Contents

1. Safety Instructions P.2

2. Application P.9

3. Standard specification P.9

4. How to order P.10

5. Replacement parts P.11

6. How to replace the element P.12

7. Dimensions P.16

Safety Instructions

These safety instructions are intended to prevent hazardous situations and/or equipment damage.
These instructions indicate the level of potential hazard with the labels of “Caution,” “Warning” or “Danger.”
They are all important notes for safety and must be followed in addition to International Standards (ISO/IEC)*1) , and other safety regulations.

*1) ISO 4414: Pneumatic fluid power -- General rules relating to systems.
ISO 4413: Hydraulic fluid power -- General rules relating to systems.
IEC 60204-1: Safety of machinery -- Electrical equipment of machines .(Part 1: General requirements)
ISO 10218: Manipulating industrial robots -Safety.
etc.

⚠ **Caution**	**Caution** indicates a hazard with a low level of risk which, if not avoided, could result in minor or moderate injury.
⚠ **Warning**	**Warning** indicates a hazard with a medium level of risk which, if not avoided, could result in death or serious injury.
⚠ **Danger**	**Danger** indicates a hazard with a high level of risk which, if not avoided, will result in death or serious injury.

⚠ Warning

1. **The compatibility of the product is the responsibility of the person who designs the equipment or decides its specifications.**
   Since the product specified here is used under various operating conditions, its compatibility with specific equipment must be decided by the person who designs the equipment or decides its specifications based on necessary analysis and test results.
   The expected performance and safety assurance of the equipment will be the responsibility of the person who has determined its compatibility with the product.
   This person should also continuously review all specifications of the product referring to its latest catalog information, with a view to giving due consideration to any possibility of equipment failure when configuring the equipment.
2. **Only personnel with appropriate training should operate machinery and equipment.**
   The product specified here may become unsafe if handled incorrectly.
   The assembly, operation and maintenance of machines or equipment including our products must be performed by an operator who is appropriately trained and experienced.
3. **Do not service or attempt to remove product and machinery/equipment until safety is confirmed.**
   1. The inspection and maintenance of machinery/equipment should only be performed after measures to prevent falling or runaway of the driven objects have been confirmed.
   2. When the product is to be removed, confirm that the safety measures as mentioned above are implemented and the power from any appropriate source is cut, and read and understand the specific product precautions of all relevant products carefully.
   3. Before machinery/equipment is restarted, take measures to prevent unexpected operation and malfunction.
4. **Contact SMC beforehand and take special consideration of safety measures if the product is to be used in any of the following conditions.**
   1. Conditions and environments outside of the given specifications, or use outdoors or in a place exposed to direct sunlight.
   2. Installation on equipment in conjunction with atomic energy, railways, air navigation, space, shipping, vehicles, military, medical treatment, combustion and recreation, or equipment in contact with food and beverages, emergency stop circuits, clutch and brake circuits in press applications, safety equipment or other applications unsuitable for the standard specifications described in the product catalog.
   3. An application which could have negative effects on people, property, or animals requiring special safety analysis.
   4. Use in an interlock circuit, which requires the provision of double interlock for possible failure by using a mechanical protective function, and periodical checks to confirm proper operation.

Safety Instructions

⚠ Caution

The product is provided for use in manufacturing industries.

The product herein described is basically provided for peaceful use in manufacturing industries.
If considering using the product in other industries, consult SMC beforehand and exchange specifications or a contract if necessary.
If anything is unclear, contact your nearest sales branch.

Limited warranty and Disclaimer/Compliance Requirements

The product used is subject to the following "Limited warranty and Disclaimer" and "Compliance Requirements".
Read and accept them before using the product.

Limited warranty and Disclaimer

1.The warranty period of the product is 1 year in service or 1.5 years after the product is delivered,whichever is first.*2)
Also, the product may have specified durability, running distance or replacement parts. Please consult your nearest sales branch.
2. For any failure or damage reported within the warranty period which is clearly our responsibility, a replacement product or necessary parts will be provided.
This limited warranty applies only to our product independently, and not to any other damage incurred due to the failure of the product.
3. Prior to using SMC products, please read and understand the warranty terms and disclaimers noted in the specified catalog for the particular products.
∗2) Vacuum pads are excluded from this 1 year warranty.
A vacuum pad is a consumable part, so it is warranted for a year after it is delivered.
Also, even within the warranty period, the wear of a product due to the use of the vacuum pad or failure due to the deterioration of rubber material are not covered by the limited warranty.

Compliance Requirements

1. **The use of SMC products with production equipment for the manufacture of weapons of mass destruction (WMD) or any other weapon is strictly prohibited.**
2. **The exports of SMC products or technology from one country to another are governed by the relevant security laws and regulation of the countries involved in the transaction. Prior to the shipment of a SMC product to another country, assure that all local rules governing that export are known and followed.**

⚠ Caution

SMC products are not intended for use as instruments for legal metrology.
Measurement instruments that SMC manufactures or sells have not been qualified by type approval tests relevant to the metrology (measurement) laws of each country.
Therefore, SMC products cannot be used for business or certification ordained by the metrology (measurement) laws of each country.

Precautions for Design

Warning

(1) Consult SMC if no leakage is allowed due to the environment, or if the operating fluid is not air.
(2) Nylon resin is used for the external parts including the bowl. Organic solvents including thinner, acetone, alcohol and ethylene chloride; chemicals including sulphuric acid, nitric acid and hydrochloric acid; cutting oil, synthetic oils, ester-based compressor oil, alkali, kerosene, gasoline, lock material of screw are harmful. Do not use the product where these are present.

Type	Chemical name	Application examples	Material
			Nylon
Acid	Hydrochloric acid Sulphuric acid, Phosphoric acid Acetic acid Chromic acid	Acid washing liquid for metals	×
Alkaline	Sodium hydroxide (Caustic soda) Potash Calcium hydroxide (Slacked lime) Ammonia water Carbotane of soda	Degreasing of metals Industrial salts Water-soluble cutting oil	○
Inorganic salts	Sodium sulphide Sulphate of potash Sulphate of soda	-	△
Chlorine solvents	Carbon tetrachloride Chloroform Ethylene chloride Methylene chloride	Cleaning liquid for metals Printing ink Dilution	△
Aromatic series	Benzene Toluene Paint thinner	Coatings Dry cleaning	△
Ketone	Acetone Methyl ethyl ketone Cyclohexane	Photographic film, Dry cleaning, Textile industries	×
Alcohol	Ethyl alcohol IPA Methyl alcohol	Antifreeze Adhesives	×
Oil	Gasoline Kerosene	-	○
Ester	Phthalic acid dim ethyl Phthalic acid diethyl	Synthetic oil Anti-rust additives	○
Ether	Methyl ether Ethyl ether	Brake oil additives	○
Amino	Methyl amine	Cutting oil Brake oil additives Rubber accelerator	×
Others	Thread-lock fluid Sea water Leak tester	-	△

○: Essentially safe. △: Some effects may occur. ×: Effects will occur.

(3) Avoid the application where charge and discharge of pressure to/from a standard bowl is switched frequently.
(4) Shield from ultra violet light and radiation with protective cover.
(5) For air blow applications, prevent airborne particles from the operating environment entering into the compressed air stream. Foreign matter may adhere to the workpiece during the air blow.
(6) If the air equipment is mounted on the outlet of the product, particles will be generated from the equipment and required cleanliness may not be obtained. Instead, install the air equipment at the inlet.
(7) Using a flow rate which exceeds the product specifications could result in a differential pressure which exceeds what the product can resist.
Use the product within its specifications. Also, be sure to replace the product when needed, taking into consideration that the differential pressure of the filter will increase over time.

Selection

Warning

(1) NFS-H1 grade grease is used where lubrication is required.
(2) Do not select a model exceeding specification ranges and carefully consider the purpose of use, required specifications, and operating conditions, such as fluid, pressure, flow rate, nominal filtration rating, and environment.
(3) The product is not certified under the High Pressure Gas Safety law, so for nitrogen and Carbon dioxide gas (gas), its maximum operating pressure will be 0.99 MPa (gauge pressure).
(4) The product is provided for use in manufacturing industries. Contact us beforehand if the product will be used in an application such as a caisson shield, breathing, food (other than air-blowing), and/or medical treatment that affects the human body directly or indirectly.
(5) The antibacterial activity value of the HF2-BFA and HF2-BFB series is achieved through contact with the element surface. If the fiber surface is covered by drains, etc., it will not be as effective. The antibacterial activity value are based on the test method for determination of antibacterial activity and efficiency of textile products (JIS L 1902).
(6) HF2-BFC series adsorbs oil vapor contained in the compressed air and removes the odors derived from it, but does not remove all odors.
(7) HF2-BFD series removes and reduces bacteria contained in the compressed air. Bacterial removal refers to the effect of reducing bacteria. It does not mean that all bacteria are eliminated. Not for eliminating the virus. LRV (Log Reduction Value) is a mathematical representation that was obtained from the test (evaluation based on JIS K 3835) using test bacteria (Brevundimonas diminuta).
(8) The product does not adhere to the sanitation control procedures for the use in food and medical industries.
Since the parts used in the HF2-BF∗ series are manufactured on the same line as parts made of other materials, in rare cases these parts may have residuals from the manufacturing process.
(9) If the compressed air includes ozone, do not use it since it may damage the product or cause malfunction.

Mounting

Warning

(1) Do not drop or apply impact during transportation or installation; It will cause damage to the product and result in operation failure.
(2) Do not install in areas of high humidity or high temperature. Operation outside of the product specification range may cause damage to the product or operation failure, or shorten the product life.
(3) Connect the product ensuring the direction of "1"(IN) and "2"(OUT) for air direction or an arrow. Incorrect connections may cause malfunction.
(4) Install with adequate space for maintenance beneath the product. Refer to 7. Dimensions (page 17) for necessary space.
(5) Install vertically so that outlet of drain is facing downward. It cannot be used in horizontal or upward direction.

Caution

(1) When the bowl is installed on HF2-BF∗ series, install them so that the lock button lines up to the groove of the front (or the back) of the body to avoid drop or damage of the bowl.

Piping

Warning

(1) Before piping, perform flushing or cleaning of the piping, etc. to remove any cutting chips, cutting oil, solid foreign matter, etc. from the piping. Contamination of piping may cause damage or malfunction.
(2) When screwing together pipes and fittings, etc., be certain that chips from the pipe threads and sealant do not get inside the pipe. When a sealant tape is used, leave 1.5 to 2 thread ridges exposed at the end of the threads.
(3) Connect piping/fittings using the recommended torque while holding the female thread side tightly. Insufficient tightening torque can cause loose piping or sealing failure. Excess tightening torque may cause damage to threads. If the female side is not held while tightening, excessive force will be applied to the bracket directly, causing breakage.

Recommended tightening torque (Unit: Nm)

Thread	1/8	1/4	3/8	1/2
Torque	7 to 9	12 to 14	22 to 24	28 to 30

(4) When a one-touch fitting of SMC is used, refer to the operation manual for the one-touch fitting.
(5) Do not apply torsion or bending moment other than the weight of the product itself. External piping needs to be supported separately as it may cause damage. Non-flexible piping like steel tube is susceptible to excessive moment load or vibration. Insert flexible tubes to prevent this.

Air supply

Warning

(1) Use clean air. Do not use compressed air containing chemicals, organic solvent, synthetic oil or corrosive gas as it may be cause of breakage of components or operation failure.
(2) Generally, the following pollutant particles are contained in compressed air.
[Example: Pollutant particle substances contained in the compressed air]
- Moisture (drainage)
- Dusts and particles which are in the surrounding air
- Deteriorated oil which is discharged from the compressor
- Solid foreign matter such as rust and/or oil in the piping

1) The HF2-BF∗ series is not compatible with compressed air which contains fluids such as water and/or oil. Install a dryer, line filter, mist separator, micro mist separator, super mist separator, or odor removal filter, etc., for the source of the air for the HF2-BF∗ series.
2) Use a grade that meets ISO8573-1: 2010 [1: 4: 4] for the compressed air purity classes on the inlet side of the HF2-BF∗ series.

Maintenance

Warning

(1) Release the pressure in the product to the atmosphere when replacing parts or removing piping.
(2) Maintenance and checks should be done by following the procedure in the operation manual. Incorrect handling of the product may cause breakage or operation failure of the equipment or device.
(3) Do not touch the product when operating at high temperature (40 to 60ºC). The operators may get burnt. Be sure to confirm that the temperature of the container or operating part is reduced to 40 degrees or less to prevent burns.
(4) Perform periodical check to find cracks, flaws or other deterioration on resin bowl. If any of them is seen. Investigate and/or review the operating conditions if necessary.
(5) Check for dirt in resin bowl periodically. If any dirt is seen, replace with new bowl. If removing dirt by washing the resin bowl, never use washing material other than neutral detergent. Otherwise, the bowl is damaged.
(6) Replace the element after referring to the replacement period below. The element could break.

a) HF2-BFA, HF2-BFB, HF2-BFD
Before 1 years passed from start of use or pressure drop (difference between the inlet pressure and outlet pressure) reaches 0.1MPa.

b) HF2-BFC
Before 1 year or 2000 operating hours passed from start of use as it may deteriorate the performance.
The replacement period of the element varies depending on the operating conditions. Even before the aforementioned replacement period is reached, if there is an oil smell on the outlet side, please replace it.

(7) If drain should flow into the case, remove it out through the drain port at the bottom of the case. The drain port can also be used to exhaust residual pressure in addition to discharging the drain.

- Pressurize the inside of the air filter when discharging drain. Drain will not be discharged properly if not pressurized.
- Open and close drain cock by hand. The use of tools can result in damage to the product.
- After discharging the drain, tighten the drain cock to the opposite direction by hand until the seal inside seals correctly.

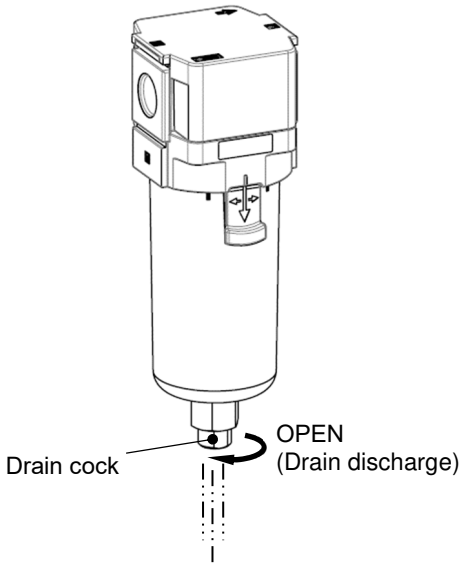

⚠ Caution

(1) Check the element periodically and replace it with a new one if necessary. If it is found that outlet pressure drops or the flow is restricted, check the condition of the element.

2. Application

This product aims at eliminating solid foreign matter (HF2-BFA series and HF2-BFB series), eliminating odors derived from oil vapor (HF2-BFC series), eliminating bacteria (HF2-BFD series), in the air line.

3. Standard specification

Body size		30	40
Port size		1/4, 3/8	1/4, 3/8, 1/2
Fluid		Air, Nitrogen, Carbon dioxide gas (gas)	
Ambient and fluid temperature	HF2-BFA, HF2-BFB, HF2-BFC	-5 to 60°C (23 to 140°F) (With no freezing)	
	HF2-BFD	5 to 45°C (41 to 113°F)	
Proof pressure		1.5MPa (225psi)	
Maximum operating pressure Note1)		1.0MPa (150psi)	
Rated flow Note2)		400L/min(ANR)	800L/min(ANR)
Nominal filtration rating Note3)	HF2-BFA	5μm (filtration efficiency 90% or more)	
	HF2-BFB	0.1μm (filtration efficiency 99%)	
	HF2-BFD	0.01μm (filtration efficiency 99.99%)	
Antibacterial performance Note4) (HF2-BFA, HF2-BFB) (Antibacterial activity value)		4 or more	
Deodorization performance (HF2-BFC) (Outlet side oil concentration)		Max. 0.003mg/m^3	
Bacteria removal performance (HF2-BFD) (Bacteria capture performance)		LRV≧9 Note5)	
Materials of parts in contact with fluid	Metal parts	Aluminum alloy, Brass (with electroless nickel plating)	
	Bowl	Nylon resin (FDA / Food Sanitation Law compliant materials)	
	Rubber parts	Fluororubber (FDA compliant material)	
	Lubrication oil	NSF-H1 grade	
Bowl guard		Standard (Nylon resin with antibacterial performance)	
Weight	HF2-BFA	0.27kg	0.45kg
	HF2-BFB	0.27kg	0.46kg
	HF2-BFC	0.20kg	0.41kg
	HF2-BFD	0.28kg	0.46kg

Note1) In case of nitrogen or carbon dioxide gas: 0.99MPa (145psi)
Note2) This is the value when combined with the Antibacterial Filter (HF2-BFB series) or the Bacteria Removal Filter (HF2-BFD series) at an inlet pressure of 0.7MPa.
Note3) Measured under SMC's specified conditions.
Note4) This is the data evaluated the filter medium (textile) based on JIS L 1902.
Note5) This is the data evaluated the filter medium based on JIS K 3835.
Note6) Refer to chemical data on P.3 for chemical resistance of the bowl.

4. How to order

HF2-	BFB	30	-		02	-	
	(1)	(2)		(3)	(4)		(5)

		Symbol	Details	(2) Body size	
				30	40
(1)	Filter type	BFA	Antibacterial Filter (5μm)	●	●
		BFB	Antibacterial Filter (0.1μm)	●	●
		BFC	Odor Removal Filter	●	●
		BFD	Bacteria Removal Filter	●	●
(3)	Thread type	Nil	Rc	●	●
		N	NPT	●	●
		F	G	●	●
(4)	Port size	02	1/4	●	●
		03	3/8	●	●
		04	1/2	-	●
(5)	Semi-standard	Nil	Flow direction: left to right	●	●
		R	Flow direction: right to left	●	●

5. Replacement parts

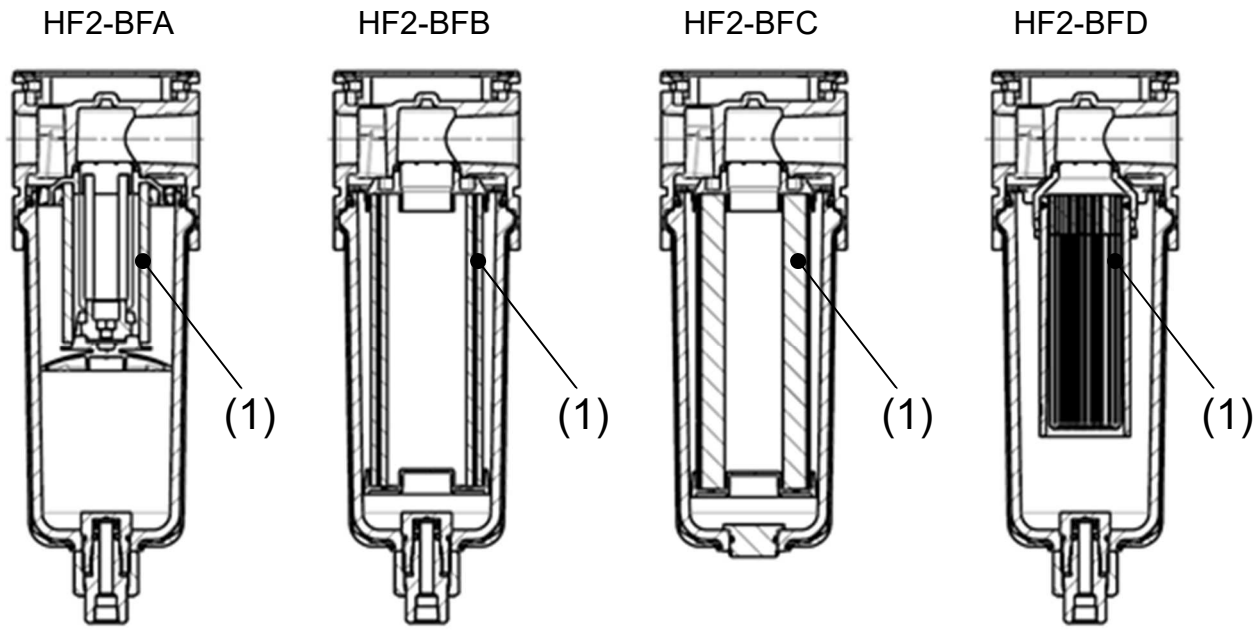

No.	Parts description	Applicable product	Component number	
			Body size 30	Body size 40
1	Element	HF2-BFA	BFA30P-060S	BFA40P-060S
		HF2-BFB	BFB-EL30	BFB-EL40
		HF2-BFC	BFC-EL30	BFC-EL40
		HF2-BFD	BFD-EL30	BFD-EL40

6. How to replace the element

Warning

Before replacement, make sure that no pressure remains in the equipment.
After replacement, confirm that the product satisfies specific functions and no external leakage occurs before operating it.

Step 1
Remove the bowl assembly from the product. While the lock button is held down, rotate the bowl assembly by approx. 30 degrees so that the mating marks of the body and bowl assembly meet each other. Then remove the bowl assembly by pulling it downward.

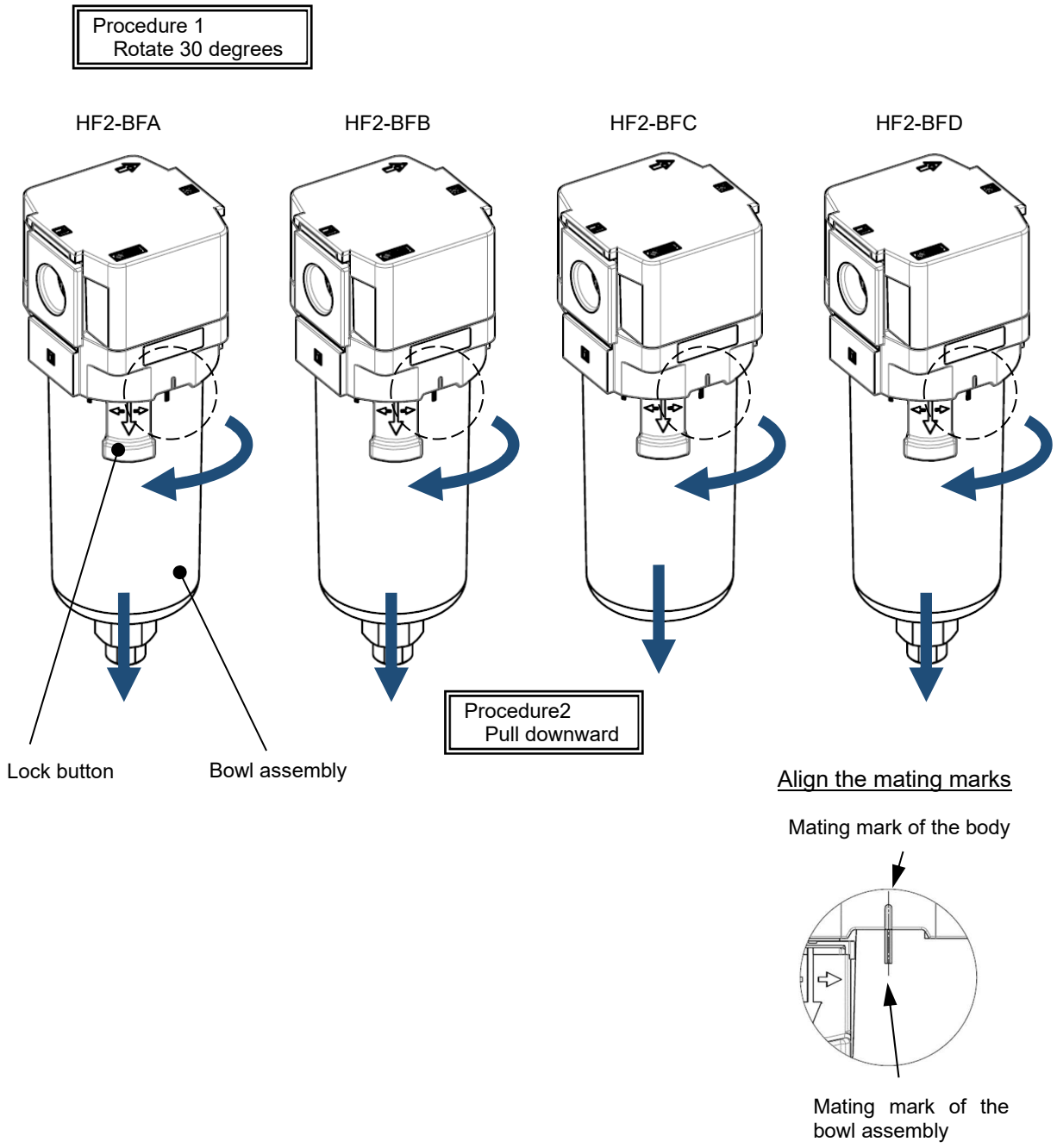

Step 2
Rotate the deflector (HF2-BFA) or the element assembly (HF2-BFB, HF2-BFC, HF2-BFD) 45 degrees while holding the holding parts and remove the element assembly.

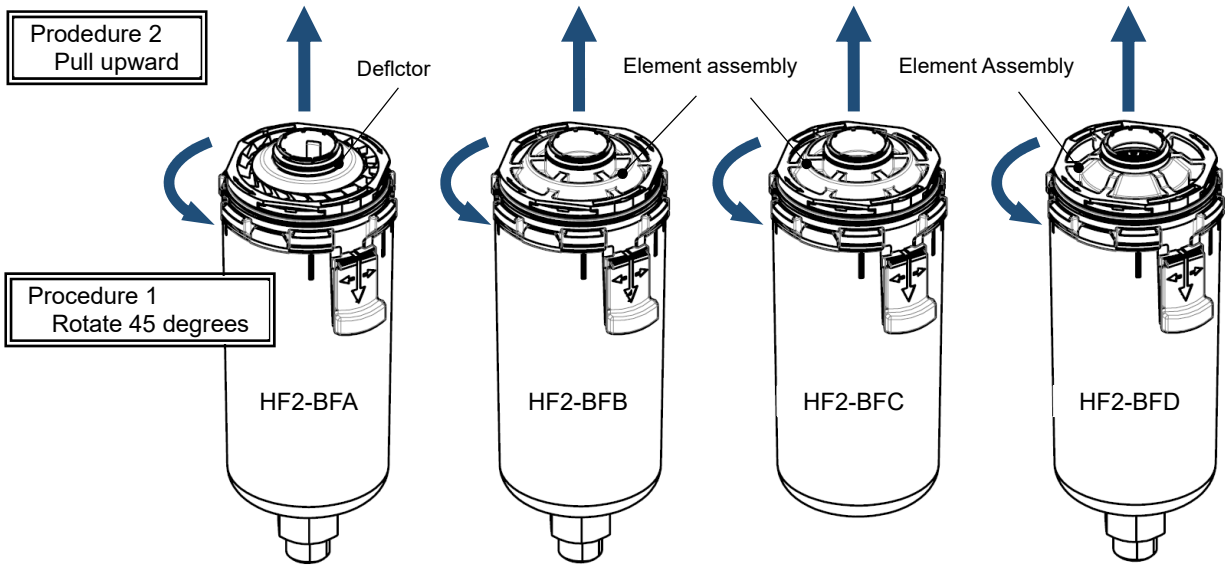

< Holding part of the deflector or the element assembly >

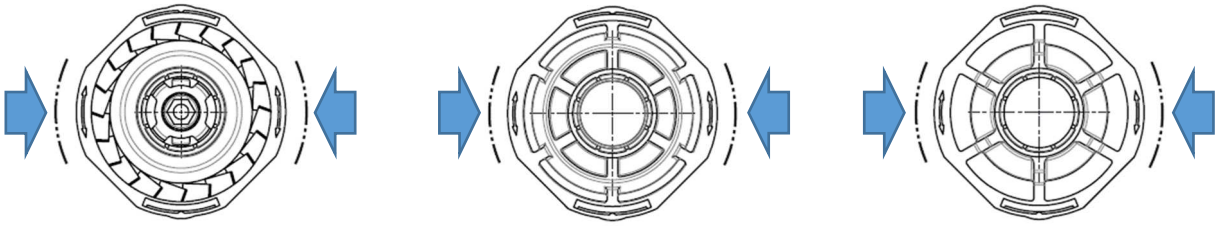

HF2-BFA HF2-BFB, HF2-BFC HF2-BFD

Step 3 < In the case of HF2-BFA >
Rotate the buffle in the arrow direction, and remove the element. Mount the new element to the deflector and rotate the baffle in the arrow direction to mount the new element to the deflector.

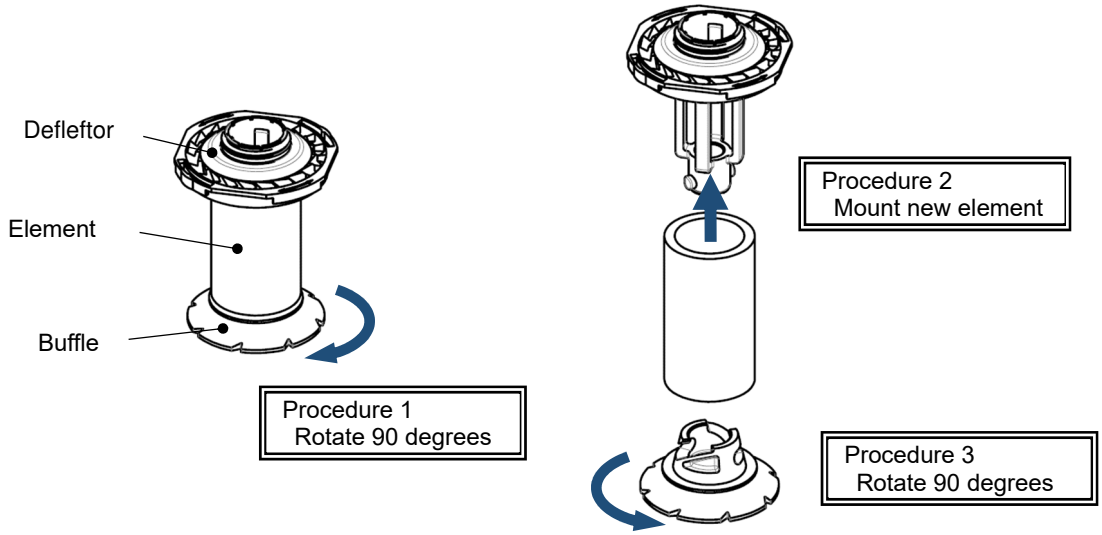

Step 4
Insert the new element assembly into the bowl assembly and rotate 45 degrees in either direction so that the protruded part of the element assembly engages with the recessed part of the bowl assembly.

Procedure 1
Mount the new element

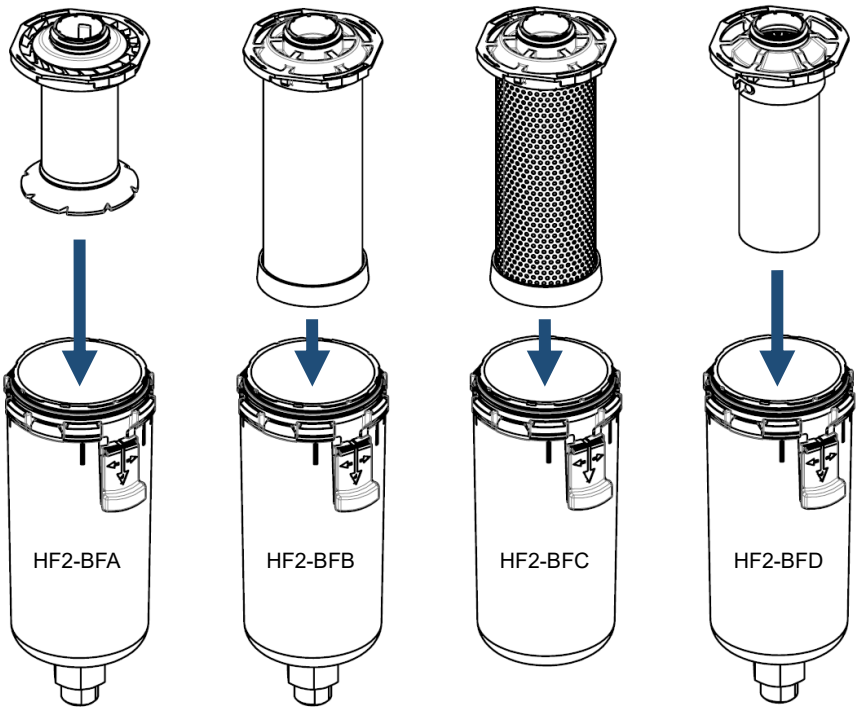

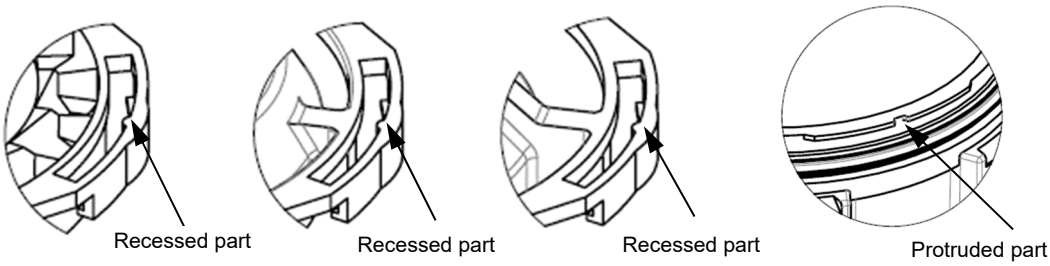

Procedure 2
Rotate 45 degrees

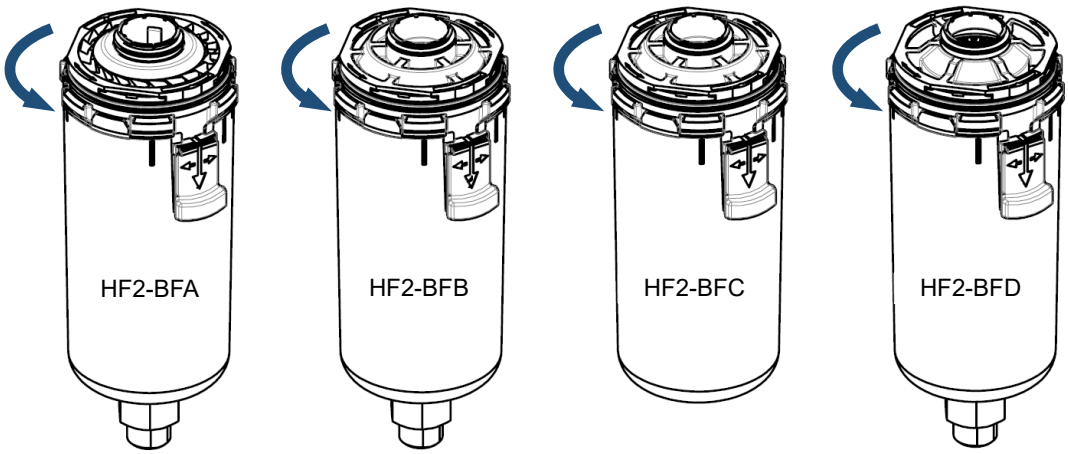

Step 5
Mount the bowl assembly to the product and rotate the bowl assembly until the lock button is locked in position as shown in the figure below.

Procedure 1
Insert to the product

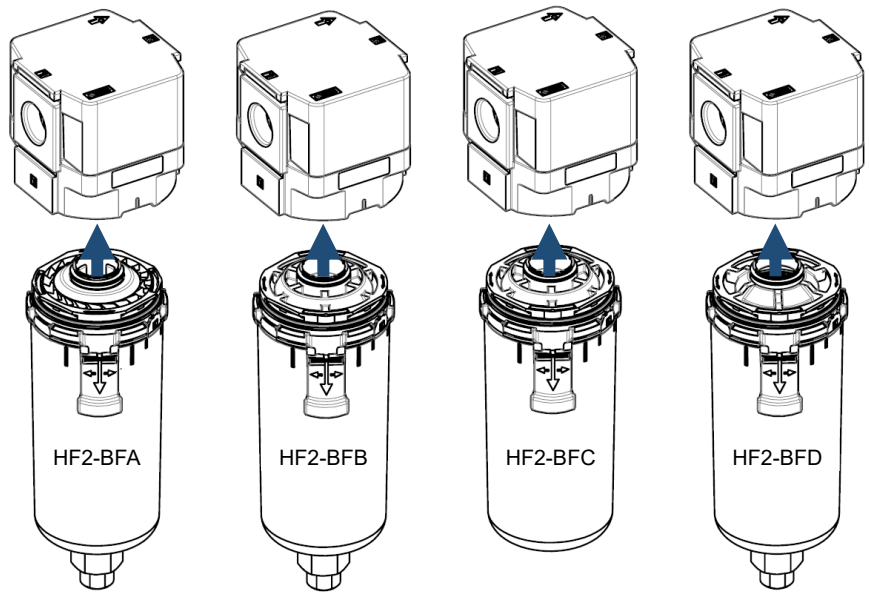

Insert with aligning the mating mark

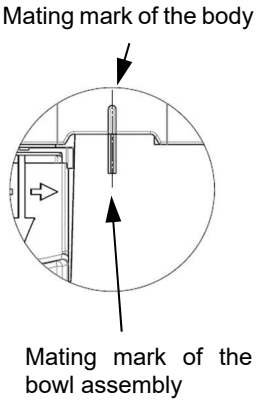

Procedure 2
Rotate 30 degrees

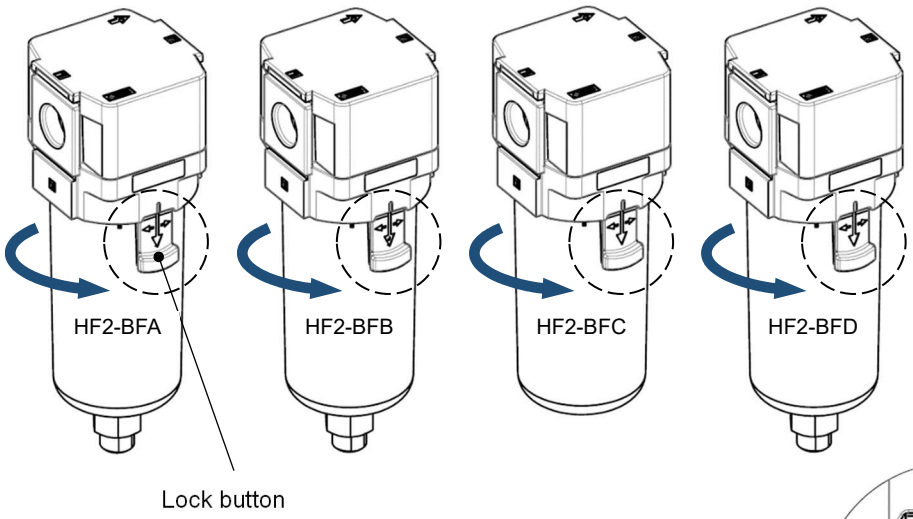

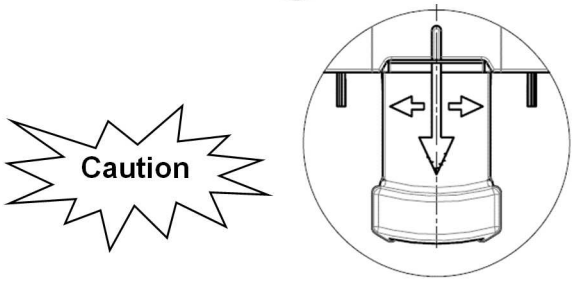

Make sure that the lock button is locked to the flute of the product before pressurising it.

7. Dimensions

HF2-BFA, HF2-BFB, HF2-BFD

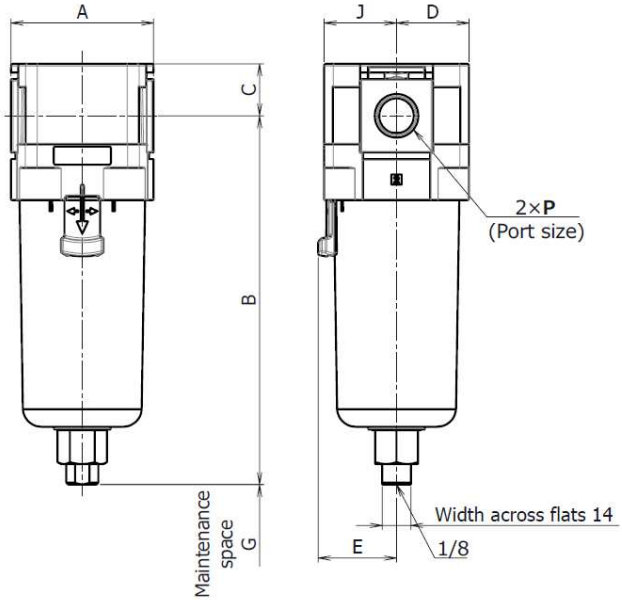

HF2-BFC

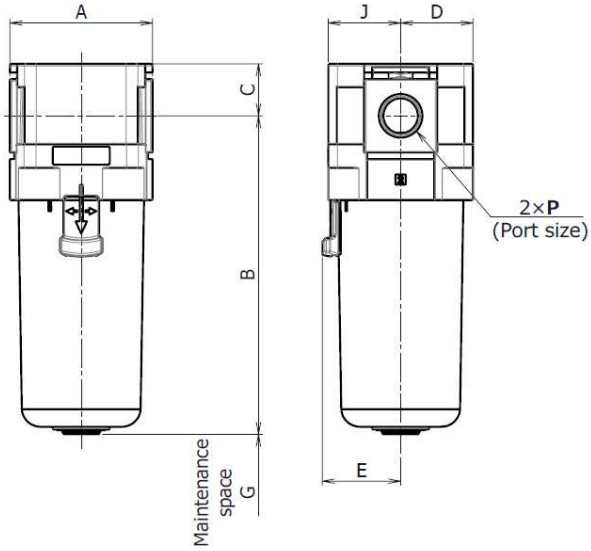

Model	P	A	B	C	D	E	G	J
HF2-BFA30	1/4, 3/8	53	151.1	21.5	26.5	30	35	26.5
HF2-BFB30	1/4, 3/8	53	151.1	21.5	26.5	30	35	26.5
HF2-BFC30	1/4, 3/8	53	126.4	21.5	26.5	30	35	26.5
HF2-BFD30	1/4, 3/8	53	151.1	21.5	26.5	30	35	26.5
HF2-BFA40	1/4, 3/8, 1/2	70	180.9	25.5	35.5	38.4	40	35.5
HF2-BFB40	1/4, 3/8, 1/2	70	180.9	25.5	35.5	38.4	40	35.5
HF2-BFC40	1/4, 3/8, 1/2	70	156.2	25.5	35.5	38.4	40	35.5
HF2-BFD40	1/4, 3/8, 1/2	70	180.9	25.5	35.5	38.4	40	35.5

Document No.AMX-OMZ0106

Revision history

SMC Corporation
4-14-1, Sotokanda, Chiyoda-ku, Tokyo 101-0021 JAPAN
Tel: + 81 3 5207 8249 Fax: +81 3 5298 5362
URL https://www.smcworld.com

Note: Specifications are subject to change without prior notice and any obligation on the part of the manufacturer.
© 2022 SMC Corporation All Rights Reserved