No.D-※S-OMU0002-C

Operation Manual

PRODUCT NAME

Actuator Position Sensor

MODEL / Series / Product Number

D-MP# series

SMC Corporation

Contents

Safety Instructions	2
Model Indication and How to Order	8
Summary of Product parts	8
Mounting and Installation	10
Installation	10
Wiring	11
Setting	12
IO-Link	16
Troubleshooting	23
Maintenance	28
Specifications	29
Dimensions	30

No.D-※S-OMU0002-B

Safety Instructions

These safety instructions are intended to prevent hazardous situations and/or equipment damage. These instructions indicate the level of potential hazard with the labels of **"Caution," "Warning"** or **"Danger."** They are all important notes for safety and must be followed in addition to International Standards (ISO/IEC)*1), and other safety regulations.

*1) ISO 4414: Pneumatic fluid power - General rules and safety requirements for systems and their components
ISO 4413: Hydraulic fluid power - General rules and safety requirements for systems and their components
IEC 60204-1: Safety of machinery - Electrical equipment of machines - Part 1: General requirements
ISO 10218-1: Robots and robotic devices - Safety requirements for industrial robots - Part 1:Robots
etc.

Danger	**Danger** indicates a hazard with a high level of risk which, if not avoided, will result in death or serious injury.
Warning	**Warning** indicates a hazard with a medium level of risk which, if not avoided, could result in death or serious injury.
Caution	**Caution** indicates a hazard with a low level of risk which, if not avoided, could result in minor or moderate injury.

Warning

1. The compatibility of the product is the responsibility of the person who designs the equipment or decides its specifications.

Since the product specified here is used under various operating conditions, its compatibility with specific equipment must be decided by the person who designs the equipment or decides its specifications based on necessary analysis and test results. The expected performance and safety assurance of the equipment will be the responsibility of the person who has determined its compatibility with the product. This person should also continuously review all specifications of the product referring to its latest catalog information, with a view to giving due consideration to any possibility of equipment failure when configuring the equipment.

2. Only personnel with appropriate training should operate machinery and equipment.

The product specified here may become unsafe if handled incorrectly. The assembly, operation and maintenance of machines or equipment including our products must be performed by an operator who is appropriately trained and experienced.

3. Do not service or attempt to remove product and machinery/equipment until safety is confirmed.

1. The inspection and maintenance of machinery/equipment should only be performed after measures to prevent falling or runaway of the driven objects have been confirmed.
2. When the product is to be removed, confirm that the safety measures as mentioned above are implemented and the power from any appropriate source is cut, and read and understand the specific product precautions of all relevant products carefully.
3. Before machinery/equipment is restarted, take measures to prevent unexpected operation and malfunction.

4. Our products cannot be used beyond their specifications. Our products are not developed, designed, and manufactured to be used under the following conditions or environments. Use under such conditions or environments is not covered.

1. Conditions and environments outside of the given specifications, or use outdoors or in a place exposed to direct sunlight.
2. Use for nuclear power, railways, aviation, space equipment, ships, vehicles, military application, equipment affecting human life, body, and property, fuel equipment, entertainment equipment, emergency shut-off circuits, press clutches, brake circuits, safety equipment, etc., and use for applications that do not conform to standard specifications such as catalogs and operation manuals.
3. Use for interlock circuits, except for use with double interlock such as installing a mechanical protection function in case of failure. Please periodically inspect the product to confirm that the product is operating properly.



Safety Instructions

⚠ Caution

We develop, design, and manufacture our products to be used for automatic control equipment, and provide them for peaceful use in manufacturing industries.
Use in non-manufacturing industries is not covered.
Products we manufacture and sell cannot be used for the purpose of transactions or certification specified in the Measurement Act.
The new Measurement Act prohibits use of any unit other than SI units in Japan.

Limited warranty and Disclaimer/Compliance Requirements

The product used is subject to the following “Limited warranty and Disclaimer” and “Compliance Requirements”.
Read and accept them before using the product.

Limited warranty and Disclaimer

1. The warranty period of the product is 1 year in service or 1.5 years after the product is delivered, whichever is first.*2)
   Also, the product may have specified durability, running distance or replacement parts. Please consult your nearest sales branch.
2. For any failure or damage reported within the warranty period which is clearly our responsibility, a replacement product or necessary parts will be provided.
   This limited warranty applies only to our product independently, and not to any other damage incurred due to the failure of the product.
3. Prior to using SMC products, please read and understand the warranty terms and disclaimers noted in the specified catalog for the particular products.

***2) Vacuum pads are excluded from this 1 year warranty.**
A vacuum pad is a consumable part, so it is warranted for a year after it is delivered.
Also, even within the warranty period, the wear of a product due to the use of the vacuum pad or failure due to the deterioration of rubber material are not covered by the limited warranty

Compliance Requirements

1. The use of SMC products with production equipment for the manufacture of weapons of mass destruction (WMD) or any other weapon is strictly prohibited.
2. The exports of SMC products or technology from one country to another are governed by the relevant security laws and regulations of the countries involved in the transaction. Prior to the shipment of a SMC product to another country, assure that all local rules governing that export are known and followed.

Operator

- ♦This operation manual is intended for those who have knowledge of machinery using pneumatic equipment, and have sufficient knowledge of assembly, operation and maintenance of such equipment. Only those persons are allowed to perform assembly, operation and maintenance.
- ♦Read and understand this operation manual carefully before assembling, operating or providing maintenance to the product.

■Safety Instructions

⚠Warning
•Do not disassemble, modify (including changing the printed circuit board) or repair. An injury or failure can result.
•Do not operate the product outside of the specifications. Do not use for flammable or harmful fluids. Fire, malfunction, or damage to the product can result. Verify the specifications before use.
•Do not operate in an atmosphere containing flammable or explosive gases, with dust. Fire or an explosion can result. This product is not designed to be explosion proof.
•If using the product in an interlocking circuit: •Provide a double interlocking system, for example a mechanical system. •Check the product regularly for proper operation. Otherwise malfunction can result, causing an accident.
•The following instructions must be followed during maintenance: •Turn off the power supply. •Stop the air supply, exhaust the residual pressure and verify that the air is released before performing maintenance. Otherwise an injury can result.
⚠Caution
•Do not touch terminals and printed circuit board inside the product. Otherwise it can cause electric shock, malfunction or damage to the product can result.
•After maintenance is complete, perform appropriate functional inspections. Stop operation if the equipment does not function properly. Safety cannot be assured in the case of unexpected malfunction.

The description "Cylinder" or "actuator" indicates a cylinder, air gripper, rotary actuator, electrical actuator or cylinder, etc.
Hereafter the "actuator position sensor" is described as the "position sensor".

Design and Selection

Warning

(1) Review the specifications.
If the product is used with an excessive load or used outside of the specifications, it may cause damage or malfunction.
The product cannot be guaranteed if is used outside of the specification range.

Caution

(1) Take precautions when multiple actuators are used close together.
When using two or more cylinder or actuator with magnet built in close proximity to each other, maintain a minimum separation distance of at least 40 mm. (If the separation distance is specified for the actuator series, then use that value).
The product may malfunction due to magnetic field interference.

(2) Reserve a space for maintenance.
Design the system to allow the required space for maintenance.

(3) Never mount the cylinder/actuator in a location that will be used as a footrest.
If work personnel gets on or puts the work personnel's foot on the footing accidentally, an excessive load will be applied to the rotary table, causing the rotary actuator to break.

(4) Design the product to prevent reverse current when the circuit is open or the product is forced to operate for operational checks.
Reverse current can cause product damage or malfunction.

(5) Limitations of the detection position
There will be mounting positions or surfaces where the product cannot be mounted due to physical interference (e.g. rear side of the foot bracket), depending on the mounting conditions of the actuator. Select the product after confirming that the product's mounting position does not interfere with the mounting bracket (e.g. trunnion, reinforcement ring).
The position sensor might protrude out of the cylinder and it may not be possible to mount depending on the cylinder bore size or stroke.
When the position is to be measured over the cylinder full stroke, use a cylinder with a stroke 5 mm shorter than the sensor range.
Use a stroke reading cylinder when the full stroke cannot be detected by the position sensor.

(6) The wiring length should be kept to 20 m or less.
For long wire lengths, we recommend a ferrite core should be attached to both ends of the cable, to reduce noise.

(7) Do not use a load which generates surge voltage.
When a load which generates a surge voltage is to be directly driven, operate such as a relay or solenoid, use an auto switch with built-in surge protection.

(8) The output operation of the position sensor will be unstable for 150 ms after power is supplied.
During the time after supplying power, the input device (e.g. PLC, relay) may consider the ON position as OFF output or the OFF position as ON output.
Please set up the application to consider the signals will be invalid within 150 ms after power is supplied.

(9) Install a rotation stopper to the actuator piston rod.
Use a guide or select an SMC product with a rotation stopping function.
The accuracy may decrease without a rotation stopper.
With some cylinders, the magnet may rotate even when the piston rod does not rotate. The magnet inside some cylinders with guide may rotate.

(10) **If the power is turned on while the magnet (target of detection) is out of the measurement range, the analogue output indicates the lower limit value and switch output indicates logic level low.**
(Analogue current is 4[mA], analogue voltage is 0[V], switch output is ON for NPN output, OFF for PNP output)
Analogue output and switch output will operate correctly by operating the cylinder at full stroke more than once.

(11) Accuracy may decrease under the following operating conditions.
When warm up time is inadequate (10 to 15 minutes), play due to mechanical reason or floating joint exists, or magnetic effect such as disturbance or magnetic substance (iron, screws) is present in the

operating environment.
It is recommended to use non-magnetic materials for surrounding parts.

Mounting and Adjustment

Caution

(1) Do not drop or apply impact.
Applying an excessive impact (more than 300 m/s^2) may damage the product and cause malfunction.

(2) Observe the proper tightening torque for mounting.
If the screws are tightened in excessive of the specified torque range (0.2 to 0.4 Nm), it may damage the cylinder/actuator, mounting screws, mounting brackets, and sensor etc.
Tightening below the specified tightening torque will allow the position sensor to move out of position.

(3) Do not carry an actuator by the position sensor lead wire.
This may cause a broken lead wires or damage to the auto switch internal elements.

(4) Use only the screws installed in the position sensor body for mounting the position sensor.
If other screws are used, the position sensor may be damaged.

(5) Check and adjust the actual product operation during installation.
The auto switch may not operate in the correct actuator mounting position due to the installation environment.
Also check and adjust the auto switch operation when used in intermediate stroke positions, according to the operating environment.

Wiring

Caution

(1) Check the insulation of the wiring.
Check that there is no faulty wiring insulation (short circuits, faulty ground connections, improper insulation between terminals, etc.), as this may damage the auto switch due to over current.

(2) Do not route the auto switch wiring in the same place as power cables or high voltage cables.
Otherwise auto switch malfunction may result due to noise and inrush current.

(3) Avoid repeatedly bending or stretching the lead wire.
Broken lead wires will result if bending stresses or tensile forces are applied to the lead wires.
Stress and tensile forces applied to the connection between the lead wire and the product increases the possibility of disconnection.
Secure the lead wire to reduce any movement in the area where the lead wire connects with the position sensor.

(4) Be sure to shut off the user’s power supply before wiring.
Otherwise electric shock, malfunction or damage to the position sensor can result.

(5) Do not allow short-circuit of loads.
There is a risk of damage of position sensor.

(6) Wire correctly.
Incorrect wiring may cause malfunction or damage to the position sensor.

Operating Environment

Warning

(1) Never use in an atmosphere of explosive gases, dust.
Position sensors are not designed with an explosion proof construction. Fire or an explosion may result.

Caution

(1) Do not use in a location where magnetic fields are generated.
The Position sensor will malfunction or the accuracy will be decreased.

(2) Do not use in an environment where the position sensor will be continually exposed to water or condensation.
Although the product satisfies the IEC standard IP67 specifications, do not use in applications continually exposed to water splashing or spray. Otherwise, insulation failure or malfunction may result.

(3) Do not use in an environment where oil or chemical splashes can occur.
If the products are used in an environment with coolants, cleaning solvents, oils or chemicals for even a short time, they may be adversely affected by insulation failure, malfunction due to swelling of the potting

resin, or hardening of the lead wires.
When using solutions such as cutting oil/grinding oil/cleaning solution, even if there is no problem with a single solution, the workpiece is transported to the next process with the solution from the previous process adhering to it, etc., and multiple solutions may mix and change components, resulting in a short life span.
Depending on the temperature environment and coolant fluid used, water-resistant performance may deteriorate.

(4) Do not use in an environment where there are cyclic temperature changes.
Heat cycles other than ordinary changes in temperature can adversely affect the position sensor.

(5) Avoid accumulation of iron debris or close contact with magnetic substances.
When a large amount of iron waste such as machining chips or spatter has accumulated, or a magnetic substance (something attracted by a magnet) is brought into close proximity with the cylinder/actuator with magnet built in, it may cause the position sensor to malfunction due to a weakening of the magnetic force inside the actuator.

(6) Do not use in an area where surges are generated.
When there are units (solenoid lifter, high frequency induction furnace, motor, etc.) which generate a large amount of surge in the area around the cylinder/actuator with position sensor, this may cause damage to the position sensor internal circuit.

(7) Do not use in direct sunlight.

(8) Do not mount the auto switch in locations where it is exposed to radiant heat.

(9) The product is CE marked, but not immune to lightning strikes. Take measures against lightning strikes in the system.

(10) Do not use the product in a welding environment.
The Position sensor will malfunction or the accuracy will be decreased.

Maintenance

Warning

(1) Removal of equipment, and exhausting the compressed air.
When components are removed, first confirm that measures are in place to prevent workpiece from dropping, run-away equipment, etc. Then, cut the supply pressure and electric power, and exhaust all compressed air from the system using the residual pressure release function.
When machinery is restarted, proceed with caution after confirming that appropriate measures are in place to prevent cylinders from sudden movement.

(2) Never touch the terminals while the power is on.
Otherwise electric shock, malfunction or damage to the position sensor can result.

(3) Perform the following maintenance regularly to avoid possible danger due to unexpected position sensor malfunction.
1) Securely tighten the position sensor mounting screws.
If screws become loose or the mounting, position is moved, retighten them after readjusting the mounting position
2)Check that there is no damage to the lead wire.
If damage to the lead wire is found, replace the position sensor, or repair the lead wire, to avoid faulty insulation.

Caution

(1) Do not use solvents such as benzene, thinner, alcohol etc. to clean the position sensor.
These can damage the surface of the body and erase the markings on the body.
For heavy stains, use a damp cloth that has been soaked with diluted neutral detergent and fully squeezed, then wipe up the stains again with a dry cloth.

Model Indication and How to Order

D-MP□□□□

Measuring range

Symbol	Content
025	25 mm
050	50 mm
100	100 mm
200	200 mm

Lead wire

Symbol	Content
A	2,000 mm
B	M8 4-pin, plug connector: 0.3 m
C	M12 4-pin A-coded, plug connector: 0.3 m Class A

Summary of Product parts

○Summary of parts

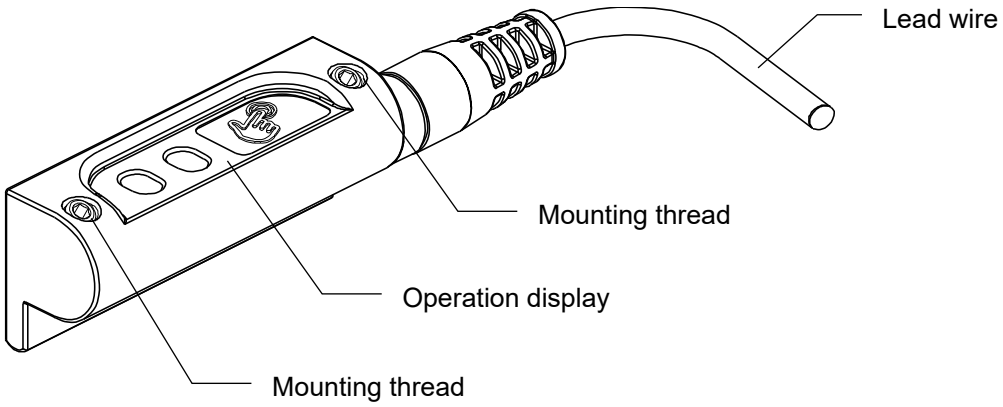

•Close up of operation display

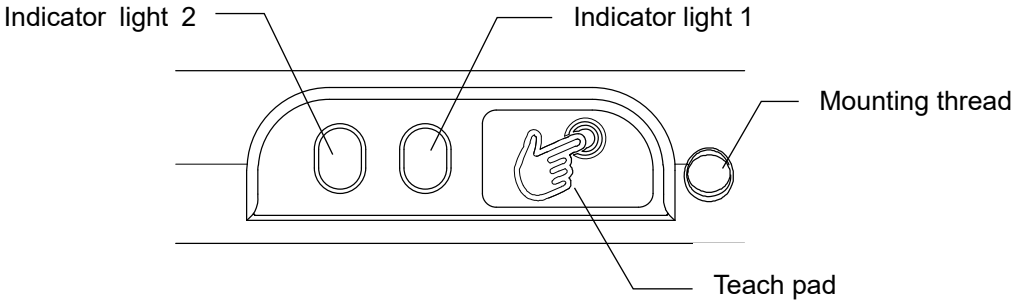

•Display

Category	Mode		Indicator light 2	Indicator light 1	Description
System status	Analogue output	Current output			Analogue current output active
		Voltage output			Analogue voltage output active
	IO-Link				IO-Link connection active
	Error				Sensor not ready for operation/ Detectable magnetic field is decrease LED flashing at 4 Hz
Switch output	High				Switch output High PNP: ON, NPN: OFF
	Low				Switch output Low PNP: OFF, NPN: ON
	Over current error				Overload of the switch output (over current)
Magnetic field	In measuring range				Magnetic field registered in measuring range
	Outside of measuring range				Magnetic field is not registered in measurement range



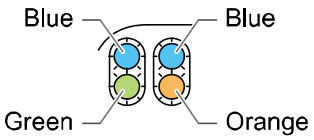

Mounting and Installation

■Installation

When mounting an actuator position sensor, use a mounting bracket appropriate for the cylinder/actuator. The mounting method differs according to the type of actuator and the inner diameter of the tube. When mounting a sensor for the first time, check that the cylinder/actuator has a built-in magnet and use an appropriate bracket for the cylinder/actuator. There are also cases when a bracket is not needed.

•Proper tightening torque

When tightening mounting screws, use a suitable hexagon wrench (1.5).
Mounting torque should be 0.2 to 0.4 Nm.
Over-tightening can damage the cylinder/actuator and sensor.
Loose screws can cause misalignment or a reduction in accuracy during operation.

Fit the switch down into the cylinder/actuator's switch mounting groove.

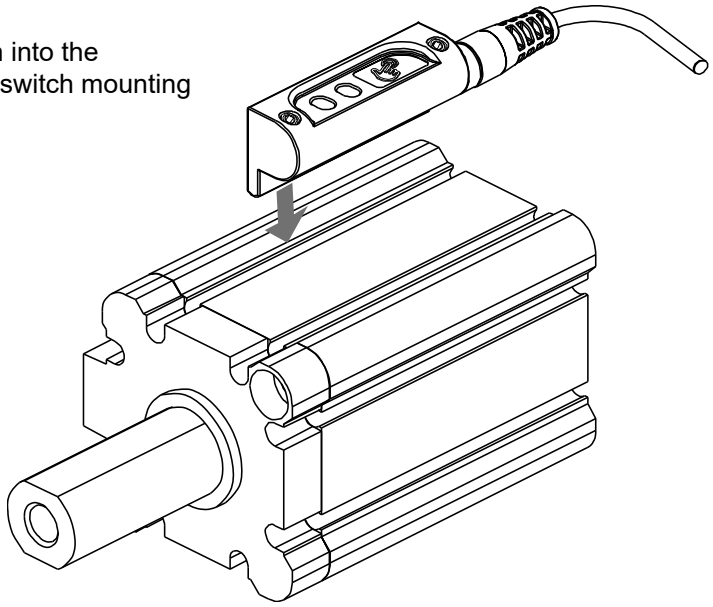

Tighten the mounting screws evenly.

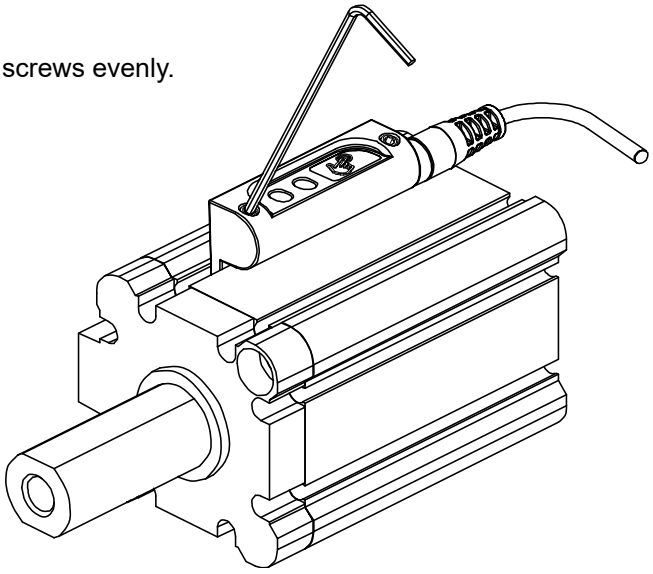

■Wiring

SIO mode

NPN output

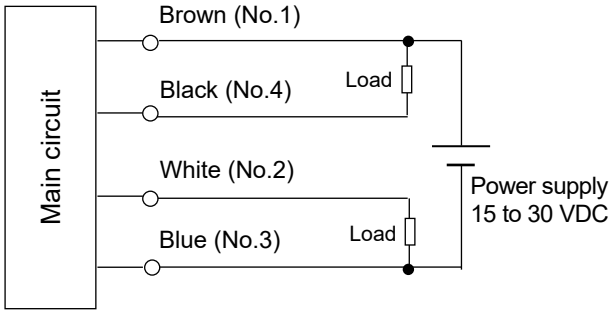

PNP output

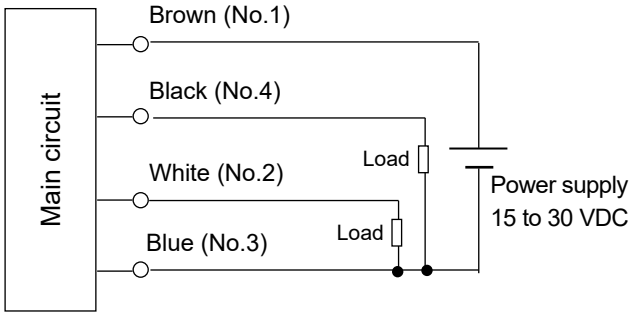

Connector pin numbers shown in brackets.

IO-Link mode

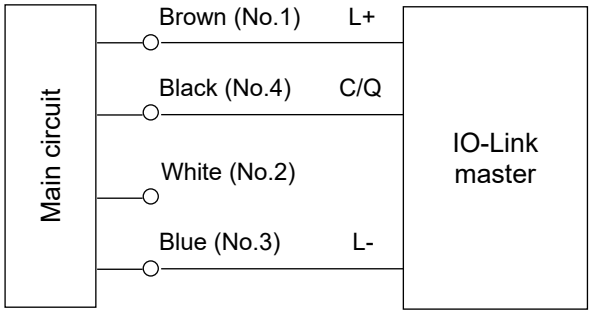

Analogue output (white) is disabled when the IO-Link mode is selected.

Wiring		Meaning
Connector pin number	Wiring colour	
1	Brown	Power supply DC(+)
2	White	Analogue current output/Analogue voltage output
3	Blue	Power supply DC(-)
4	Black	IO-Link/Switch output (C/Q)

Wiring specifications

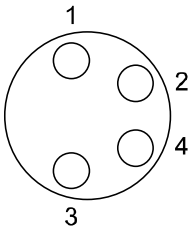

M8 Connector pin assignment

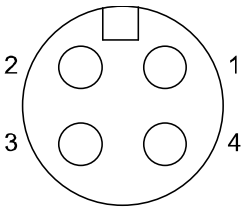

M12 Connector pin assignment

Setting

Initial settings are as follows:
Switch output: Low (NPN = ON, PNP = OFF), Analogue output: current output, Range: full range

Teach pad setting procedure

Note: For teaching the measurement range, make sure that the piston position is at the start point of the range.

Click the teach pad, and then click and hold down the teach pad.

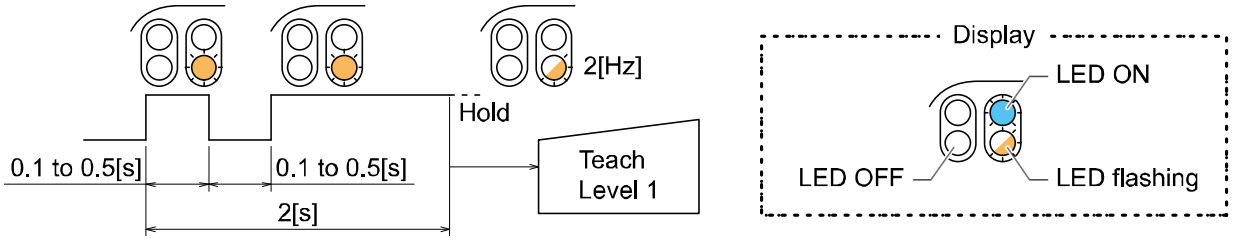

Teach level 1 starts when the indicator LED flashes slowly.

Note: If the indicator LED does not flash and setting is not available, wait for 3 seconds and double-click the teach pad again.

Teach level 1

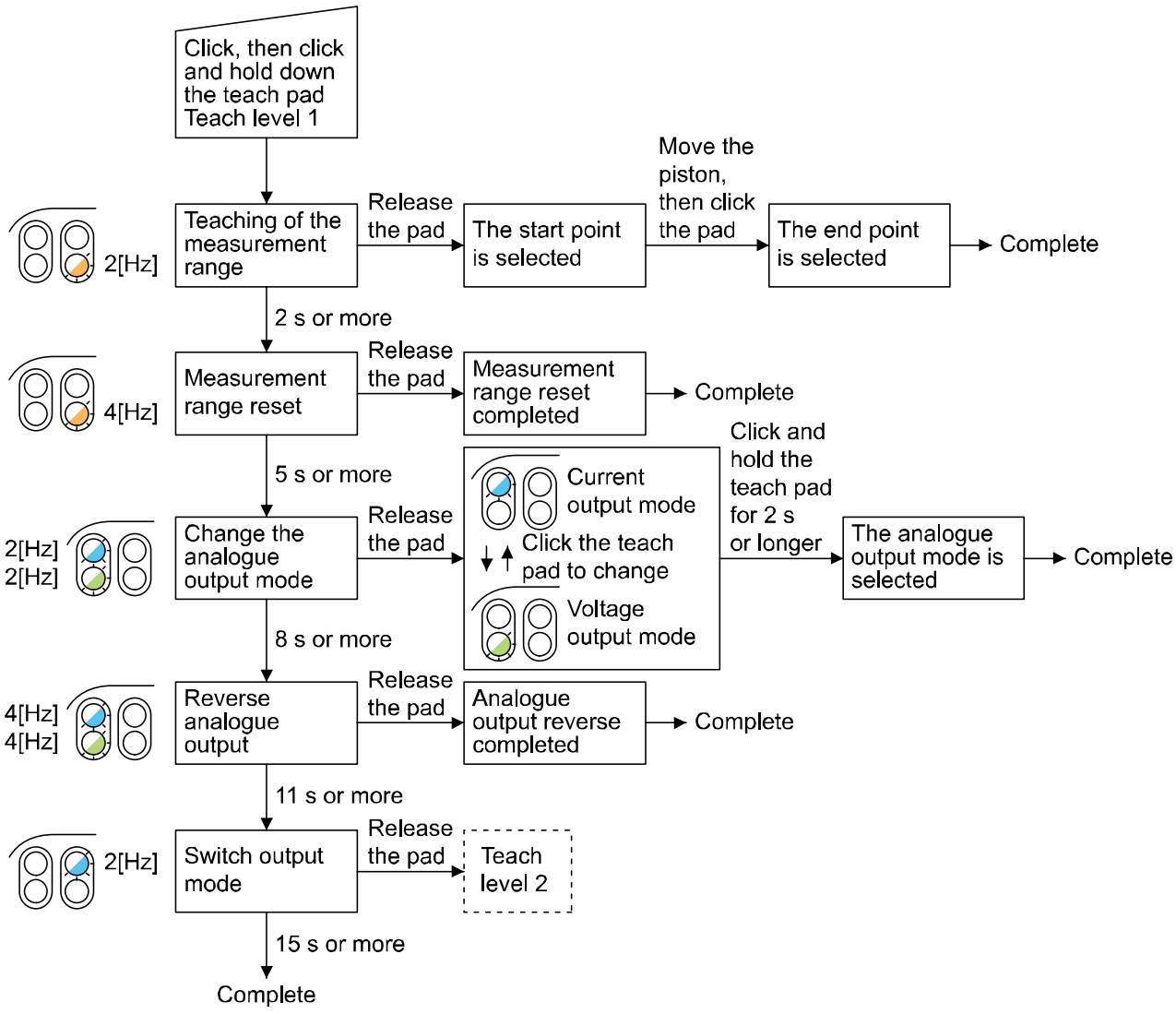

Teach level 2

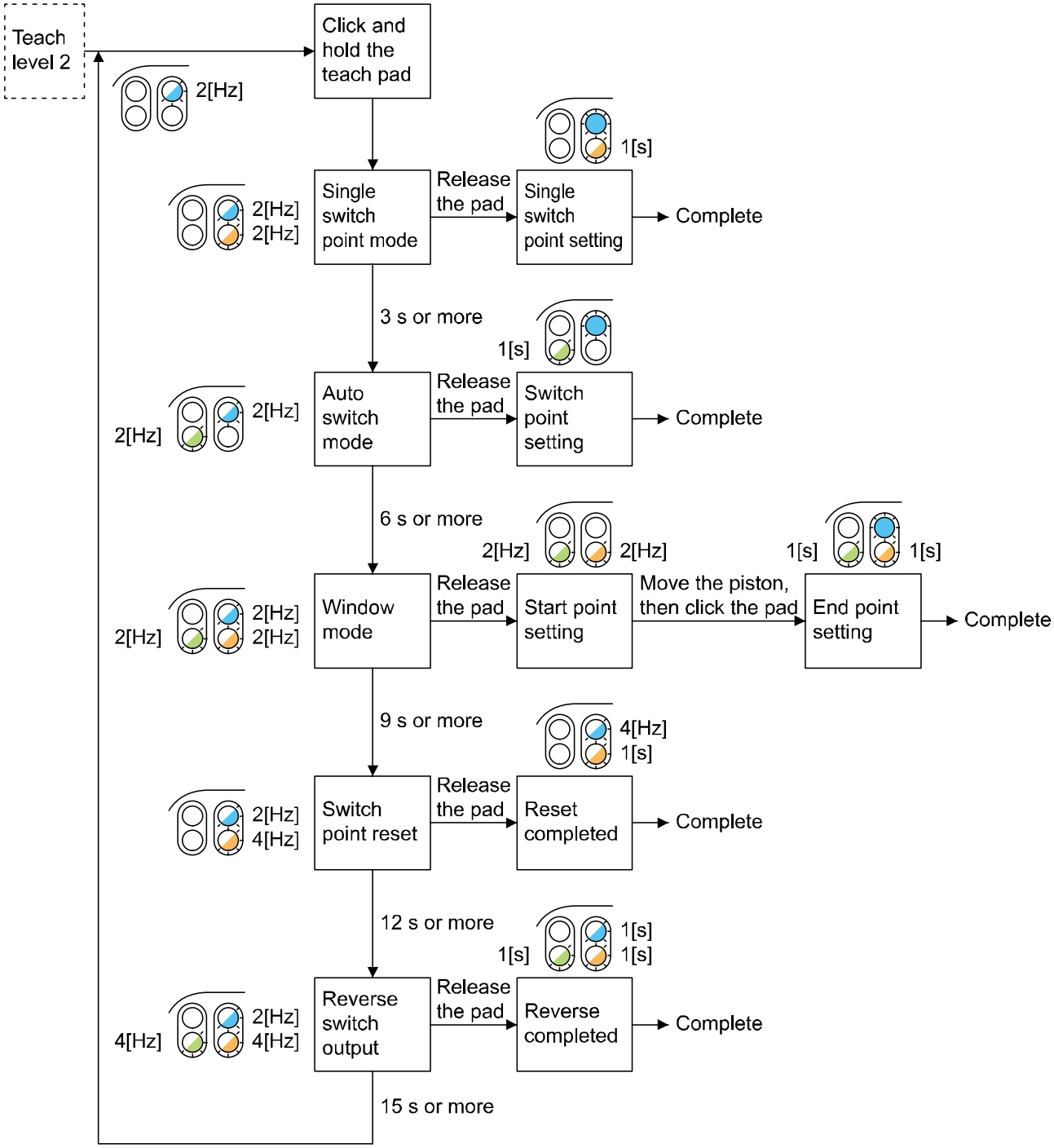

When a magnet (subject to be detected) is present outside of the measurement range, the indicator LED flashes 4 times and setting is complete.



○Analogue output

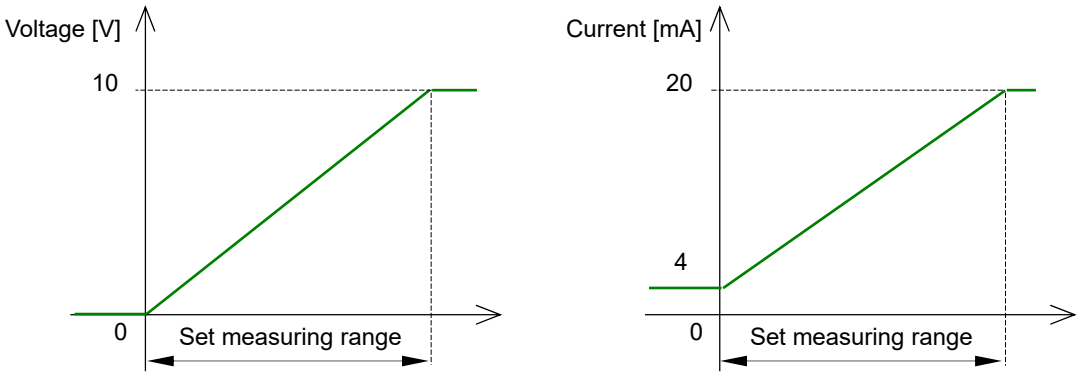

●Analogue output function
- •Measuring range can be changed by setting.
- •Whole measuring range can be reset using the reset function.
- •Analogue current output and analogue voltage output can be selected.
- •Analogue output can be reversed.

Example) 4-20 mA ⇒ 20-4 mA
0-10 V ⇒ 10-0 V

∗: If teaching is performed with the conditions below, the setting might be interrupted and the orange LED flashes 4 times.
- •If teaching is performed at the start or end of the measuring range, magnet force is not detected.
- •Minimum set measuring range: 1 mm

○Switch output mode

●There are 4 modes for switch output. Follow the conditions below.

•SP1 + Hysteresis < Measuring range

•SP2 + Hysteresis < Measuring range

•SP1－Hysteresis >0

•SP2－Hysteresis > 0

(1) Single switch point mode

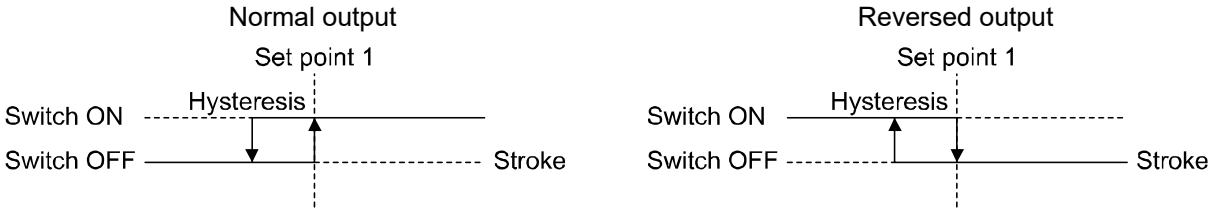

(2) Auto switch mode



<Additional condition>

SP1 + 1.5 mm + 1.5∗ hysteresis < Operation range

SP1 - 1.5 mm - 1.5∗ hysteresis > 0

ON range is approx. 3 mm. (The projections are not included in the dimension.)

(3) Window mode

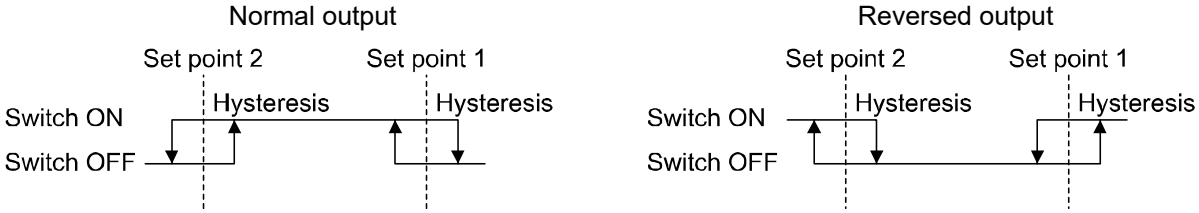

<Additional condition>

Hysteresis < | SP1 - SP2 |

(4) 2 point mode (can be sent only in IO-Link mode)

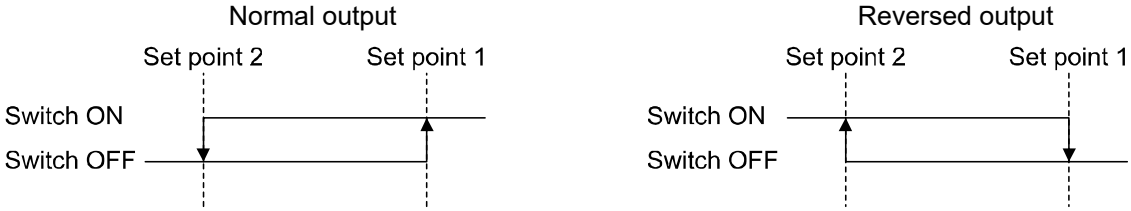

<Additional condition>

Can be used without IO-Link connection.

○Hysteresis

Default value for each mode is 0.5 mm. This can be changed between 0.05 and 20 mm by using IO-Link.

IO-Link

○Communication function

This product can check the position measurement value, diagnostic information and switch output status using cyclic data communication via the IO-Link system.

○Data storage function

The data storage function stores the IO-Link device parameter settings to the IO-Link master.
With the IO-Link data storage function, the IO-link device can be replaced easily without re-setting the equipment construction or setting parameters.

When the device parameters are set and downloaded to the device using the IO-Link setting tool, the parameters in the downloaded device will be activated. After that, these parameters are uploaded to the data storage in the master by stem command (back-up communication command). When the device is replaced with the same type of IO-Link device, the parameter settings stored in the master are downloaded automatically, the device can be operated with the parameter settings of the previous device.

3 types of back up level of the data storage can be set for each master port using IO-Link setting tool ("Disabled", "back-up/restore", "restore").
"Back-up" implies the activation of upload and "restore" implies download.

●Communication specifications

IO-Link type	Device
IO-Link version	V1.1
SIO mode	Available
Communication speed	COM3 (230.4 kbps)
Min. cycle time	1 ms
Process data length	Input: 2 byte, Output: 0 byte

●Process data

Process data is the data which is exchanged periodically between the master and device.
This product process data consists of switch output status and position measurement value

Bit offset	15	14	13	12	11	10	9	8	7	6	5	4	3	2	1	0
Description *1	Position measurement value (PD)												BDC4	BDC3	BDC2	BDC1

*1: BDC = Binary Data Channel

•The process data of this product is Big-Endian type.
When the transmission method of the upper communication is Little-Endian, the byte order will be changed

IO-Link parameter settings

○IODD file

IODD (I/O Device Description) is a definition file which provides all properties and parameters required for establishing functions and communication of the device.
IODD includes the main IODD file and a set of image files such as vendor logo, device picture and device icon.
The IODD file is shown below.

	Product No.	IODD file *
1	D-MP025A/B/C	SMC-D-MP025-yyyymmdd-IODD1.1
2	D-MP050A/B/C	SMC-D-MP050-yyyymmdd-IODD1.1
3	D-MP100A/B/C	SMC-D-MP100-yyyymmdd-IODD1.1
4	D-MP200A/B/C	SMC-D-MP200-yyyymmdd-IODD1.1

∗: "yyyymmdd" indicates the file preparation date. yyyy is the year, mm is the month and dd is the date.

The IODD file can be downloaded from the SMC Web site (https://www.smcworld.com).

○Service data

The tables below indicates the parameters which can be read or written by simple access parameter (direct parameters page) and ISDU parameters which are applicable to various parameters and commands.

•Direct operation parameters

Address	Access	Parameter name	Default (decimal number)	Value
0x07	R	Vendor ID	0x0083(131)	SMC Corporation
0x08				
0x09	R	Device ID	0x0125(293) 0x0126(294) 0x0127(295) 0x0128(296)	D-MP025∗ D-MP050∗ D-MP100∗ D-MP200∗

•ISDU parameters

ISDU		Access ∗1	Parameter name	Data storage ∗2	Value
Index (decimal number)	Subindex				
0x0002 (2)	0	W	System Command	N	Refer to system command (P.19)
0x000C (12)	0	R/W	Device Access Lock	Y	Refer to device access lock (P.19)
0x0010 (16)	0	R	Vendor Name	N	SMC Corporation
0x0011 (17)	0	R	Vendor Text	N	www.smcworld.com
0x0012 (18)	0	R	Product Name	N	Example: D-MP025A
0x0013 (19)	0	R	Product ID	N	Example: D-MP025A
0x0014 (20)	0	R	Product Text	N	Actuator Position Sensor
0x0015 (21)	0	R	Serial Number	N	8 octets fixed character string
0x0016 (22)	0	R	Hardware Version	N	
0x0017 (23)	0	R	Firmware Version	N	
0x0018 (24)	0	R/W	Application Specific Tag	Y	16 octets fixed character string
0x0024 (36)	0	R	Device Status	N	Refer to device status parameter (P.19)
0x0028 (40)	0	R	Process Data Input	N	

∗1: "R" means Read and "W" means Write.

∗2: Y: Included in DS (data storage), N: Not included in data storage.

•System command (Index 2)

In the ISDU index 0x002 SystemCommand (system command), the command shown in the table below will be issued.

The button of each system command is displayed on the IO-Link setting tool.

Click the button to send the system command to the product.

Command (decimal number)	Command name	Evaluation method
0x41(65)	SP1 single value teach	Determined set point 1
0x42(66)	SP2 single value teach	Determined set point 2
0x80(128)	Device Reset	Restart the device
0x82(130)	Restore Factory Settings	Values are set to the factory settings
0xA8(168)	Teach measuring range start	Set the start position for measuring range
0xA9(169)	Teach measuring range end	Set the end position for measuring range
0xAA(170)	Reset measuring range	Measurement range reset
0xB0(176)	Warning reset	Reset the alarms

•Device access lock (Index 12)

Subindex	Evaluation method	Selection range Value/Range
0x02(2)	Data storage lock	0：false(Unlocked) 1：true(Locked)
0x04(4)	Local user interface lock	0：false(Unlocked) 1：true(Locked)

Data storage lock:

Sensor data storage function is disabled by locking the Data storage in the sensor.

In this case, access is rejected for data storage backup and restore.

Local user interface lock:

Position sensor operation by the teach pad is prohibited. If the teach pad is touched while locking, the green LED flashes 4 times. (SIO mode)

•Device status parameter (Index 36)

Readable device status is as follows.

Value	Definition of status	Evaluation method
0	Operated normally	-
1	The equipment should be inspected	Not available
2	Out of spec.	Temperature exceeded the upper limit, power supply voltage decrease, Switch output short circuit detected
3	Check the functionality	Not available
4	Product break-down	Failed sensor

•Event

Event code	Event	Event class
0x4210(16912)	Exceeding the upper limit of the temperature	Warning
0x5000(20480)	Position sensor failure	Problems
0x5111(20753)	Decline in the power supply voltage	Warning
0x8CA8(36008)	Detectable magnetic field is decreased	Warning

•Product individual parameters

Index (decimal number)	Subindex	Access *1	Parameter name		Format	Length	Initial value	DS *2	Selection range Value/Range
0x003C (60)	1	R/W	BDC1	SetPoint1	bit(16)	16 bit	*3	Y	*3
	2	R/W		SetPoint2	bit(0)	16 bit	*3	Y	*3
0x003D (61)	1	R/W	BDC1	Logic	bit(24)	8 bit	0	Y	*4
	2	R/W		Mode	bit(16)	8 bit	0	Y	*5
	3	R/W		Hysteresis	bit(0)	16 bit	10	Y	1 to 400
0x003E (62)	1	R/W	BDC2	SetPoint1	bit(16)	16 bit	*3	Y	*3
	2	R/W		SetPoint2	bit(0)	16 bit	*3	Y	*3
0x003F (63)	1	R/W	BDC2	Logic	bit(24)	8 bit	0	Y	*4
	2	R/W		Mode	bit(16)	8 bit	0	Y	*5
	3	R/W		Hysteresis	bit(0)	16 bit	10	Y	1 to 400
0x4000 (16384)	1	R/W	BDC3	SetPoint1	bit(16)	16 bit	*3	Y	*3
	2	R/W		SetPoint2	bit(0)	16 bit	*3	Y	*3
0x4001 (16385)	1	R/W	BDC3	Logic	bit(24)	8 bit	0	Y	*4
	2	R/W		Mode	bit(16)	8 bit	0	Y	*5
	3	R/W		Hysteresis	bit(0)	16 bit	10	Y	1 to 400
0x4002 (16386)	1	R/W	BDC4	SetPoint1	bit(16)	16 bit	*3	Y	*3
	2	R/W		SetPoint2	bit(0)	16 bit	*3	Y	*3
0x4003 (16387)	1	R/W	BDC4	Logic	bit(24)	8 bit	0	Y	*4
	2	R/W		Mode	bit(16)	8 bit	0	Y	*5
	3	R/W		Hysteresis	bit(0)	16 bit	10	Y	1 to 400

∗1: "R" means Read and "W" means Write.

∗2: Y: Included in DS (data storage), N: Not included in DS.

∗3: Refer to initial value and selection range. (P.22)

∗4: 0: Normal output, 1: Reversed

∗5: 0: Deactivated, 1: Single point mode, 2: Window mode, 3: Two points mode, 128: Auto Switch mode

For all operation modes, it is necessary to satisfy the following conditions.
•(SP1 + hysteresis < measuring range) and (SP2 + hysteresis < measuring range) and (SP1 - hysteresis) > 0) and (SP2 - hysteresis) > 0
•At Window mode (hysteresis < [SP1 - SP2])
•(SP1 + 1.5 mm + 1.5 x hysteresis < measuring range) and (SP1 - 1.5 mm - 1.5 mm x hysteresis > 0)

•Product individual parameters 2

Index (decimal number)	Subindex	Access *1	Parameter name		Format	Length	Initial value	DS	Selection range Value/Range
0x3A (58)	0	R/W	Teach-in channel		Int	8 bit	0	Y	0: default BDC = BDC1 1: BDC1 2: BDC2 3: BDC3 4: BDC4 5: Measuring range
0x3B (59)	0	R	Teach-in status		Record	1 Byte		N	
0x0040 (64)	0	R/W	Device/function name		String	16 Byte	***	N	
0x0079 (121)	0	R/W	Pin 2 configuration		Unit	8 bit	37	Y	0: Deactivated 37: QA-I (Analogue current) 38: QA-U (Analogue voltage)
0x00CC (204)	0	R/W	Find Me		Unit	8 bit	0	N	0: Deactivated 1: LEDs blinking with 1 Hz
0x00E3 (227)	0	R/W	Notification Enable		Unit	8 bit	0	Y	0: All enabled 1: All disabled
0x00E5 (229)	1	R	Position of magnet	Position	bit(8)	16 bit		N	Travel distance [mm] 30000: out of measuring range
	2			Position qualifier	bit(0)	8 bit		N	*1
0x3000 (12288)	1	R/W	Measuring range	Measuring range start	bit(16)	16 bit	Refer to P.22	Y	0 to 4000 Range start - end ≧ 20
	2			Measuring range end	bit(0)	16 bit	Refer to P.22	Y	

*1: 0: Magnet within measuring range (Within measuring range)
1: Magnet out of measuring range but within working range (at the front)
2: Magnet out of measuring range but within working range (at the cable outlet)
3: Magnet is out of working range (Out of measuring range)

Initial value and selection range

Product No.	Parameter	Initial value (value) *2	Initial value (mm)	Selection range Value/Range
D-MP025∗	Setpoint 1 (SP1)	250	12.5 mm	0 to 500
	Setpoint 2 (SP2)	230	11.5 mm	
	Measuring range	0 to 500	25 mm	
D-MP050∗	Setpoint 1 (SP1)	500	25 mm	0 to 1000
	Setpoint 2 (SP2)	480	24 mm	
	Measuring range	0 to 1000	50 mm	
D-MP100∗	Setpoint 1 (SP1)	1000	50 mm	0 to 2000
	Setpoint 2 (SP2)	980	49 mm	
	Measuring range	0 to 2000	100 mm	
D-MP200∗	Setpoint 1 (SP1)	2000	100 mm	0 to 4000
	Setpoint 2 (SP2)	1980	99 mm	
	Measuring range	0 to 4000	200 mm	
Common for all ranges	Hysteresis	10	0.5 mm	0 to 400

∗2: 1value = 0.05 mm

Troubleshooting

When any position sensor failure occurs, perform the following trouble shooting.
A failure of the position sensor might depend on the operating environment (application etc.)

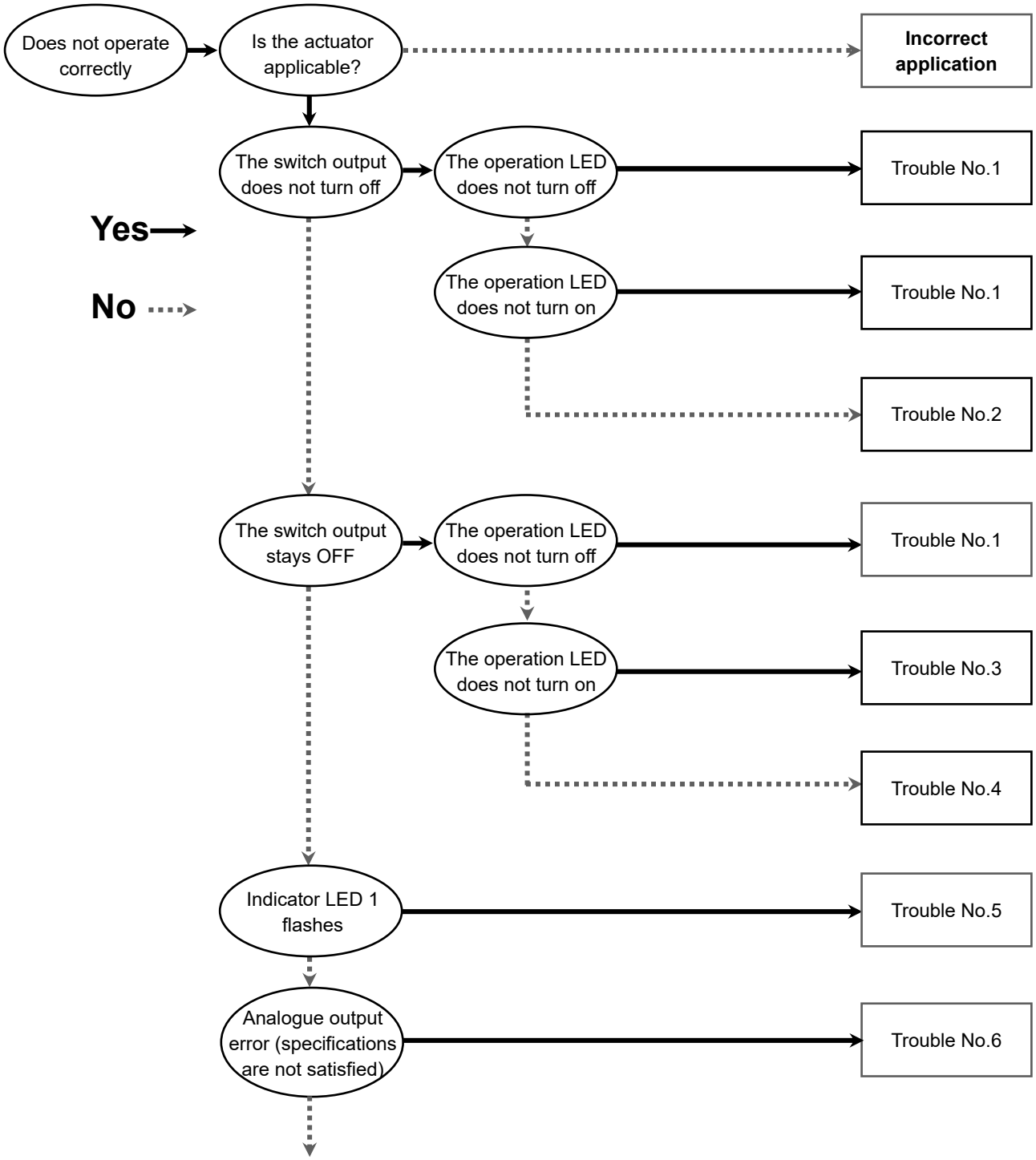

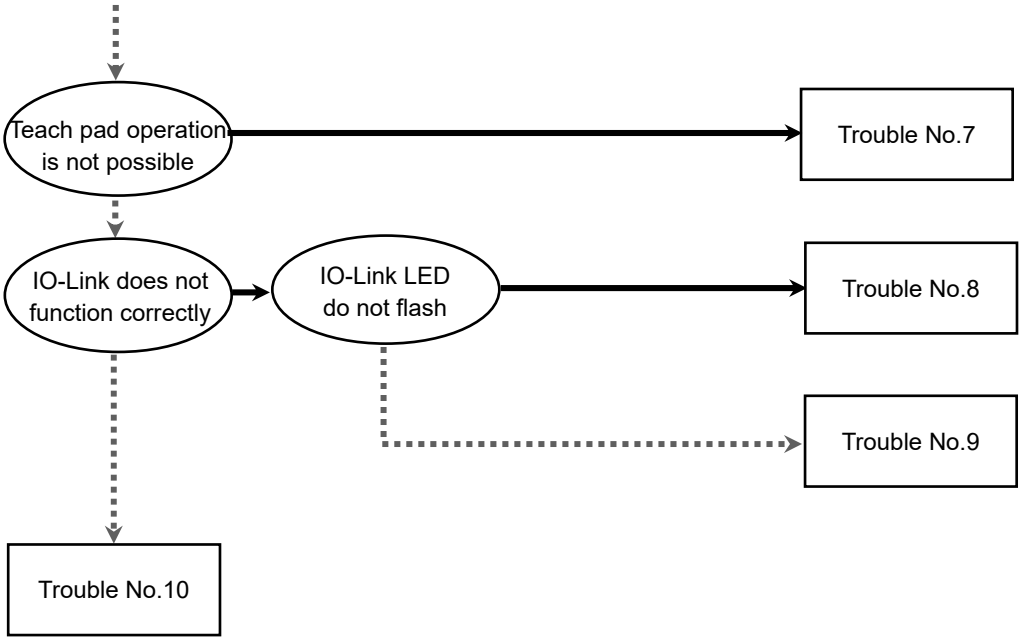
Teach pad operation is not possible
Trouble No.7
IO-Link does not function correctly
IO-Link LED do not flash
Trouble No.8
Trouble No.9
Trouble No.10

•Cross-reference for troubleshooting

Trouble No.	Problem	Possible cause	Investigation method	Countermeasures
1	•The Auto switch output does not turn off The operation LED does not turn off •The Auto switch output does not turn off The operation LED does not turn on •The switch output does not turn on The operation LED does not turn off	Incorrect setting	Setting mode (hysteresis, switch output mode, normal output/reversed output)	Reset the functions
		Improper setting (mounting) position	The presence of the following conditions Operation range of the position sensor >Actuator operating range	Reset the position sensor, change the mounting position.
		Position sensor failure		Replace the product.
2	The output does not turn off The operation LED operates correctly	Incorrect load specification	Check if the load specification satisfies the following formula. Input unit OFF current >Switch leakage current	Reset the PLC
		Incorrect wiring	Check the output wiring.	Correct wiring
		Position sensor failure		Replace the product.
3	The output does not turn on The operation LED does not turn on	Power supply failure	Check the power supply voltage (Zero or extremely low)	Adjust the power supply voltage to the specified value
		Incorrect wiring	Check the wiring	Correct the wiring
		Incorrect setting	Setting mode (hysteresis, switch output mode, normal output/reversed output)	Reset the functions
		Displacement from the set position Correct the position to the optimum position.	Check for looseness of the sensor mounting bracket and the mounting screws.	Apply the correct tightening torque (Tightening torque: 0.05 to 0.15 Nm)
		Displacement of the piston stopping position	Check for variation in the actuator stopping position.	Stabilize the stop position (Correct the misalignment and cushioning).
		Breakage of lead wire	Check the repeated bending stress/tension applied to a part of the lead wire.	Correct the wiring (Correct the tensile force and enlarge the bending radius).
		Position sensor failure		Replace the product.

Trouble No.	Problem	Possible cause	Investigation method	Countermeasures
4	The output does not turn on The operation LED operates correctly	Incorrect wiring	Check the output wiring.	Correct the wiring
		Breakage of lead wire	Check the repeated bending stress/tension applied to a part of the lead wire.	Correct the wiring (Correct the tensile force and enlarge the bending radius).
		Position sensor failure		Replace the product.
5	Indicator LED 1 flashes	Blue LED flashes Excess current was applied to the output	Check if 40 mA or more of current is applied to the output or load is short circuited.	Connect the specified load
		Orange LED flashes Inadequate magnetic force	(1) Incorrect selection of an actuator (2) Loose sensor bracket or mounting screw	(1) Select the actuator again (2) Move the cylinder for full stroke after mounting the sensor at the appropriate position with the specified torque.
		Position sensor failure		Replace the product.
6	Analogue output error (not satisfy the specification)	Warming up inadequate	Check if the product satisfies the specified accuracy 10 to 15 minutes after supplying power.	Output will drift after the power was supplied. Wait for 10 to 15 minutes for warming up.
		Incorrect wiring and incorrect load specification	Check if a correct load is connected to the analogue output.	Correct the wiring
		Incorrect mounting, displacement	Check for looseness of the position sensor mounting bracket and the mounting screws.	Apply the appropriate torque
		Rotation of cylinder piston rod	Check the rotation of piston rod	Arrange rotation stopping method
		Movement of the base	Check if the brackets or screws are loose	Fix the brackets and screws
		Influence by the magnetic substance	Magnetic materials such as brackets or screws are mounted close to the sensor.	Non-magnetic materials are to be used
		Magnetization or demagnetization of the screws or base due to welding	Check the operating environment.	Not applicable in welding environment or where stroke magnetic force is generated. Change the screws or base to non-magnetic materials.
		Influence by magnetic field disturbance	Check for the effect of a magnetic field generated by an adjacent actuator.	Increase the interval between actuators. Change the mounting surface of the position sensor.
		During IO-Link communication	Check if green LED flashes	Analogue output is disabled when IO-Link is selected.
		Position sensor failure		Replace the product.

Trouble No.	Problem	Possible cause	Investigation method	Countermeasures
7	Teach pad operation is not possible	Local user interface is locked	If the teach pad is touched while locking, the green LED flashes 4 times.	Unlock the interface in IO-Link mode.
		Not entered into the transition mode of the teach pad.	The teach pad is continuously touched.	Touch the teach pad after 3 seconds.
		Position sensor failure		Replace the product.
8	IO-Link does not function correctly Status display	Incorrect wiring	Check the cable connections and for the presence of broken wires.	Check and correct the wiring.
		Power supply error from the IO-Link master	Check the power supply voltage from the IO-Link master.	Supply 18 to 30 VDC to the IO-Link master.
9	IO-Link does not function correctly LED for indicating status flashes	IO-Link Master and product version are not matched.	Check the IO-Link version of the master and device.	Match the master IO-Link version to the device.
		Communication mode is not transferred to the Operation mode.	Check the setting of the data storage access lock and data storage backup level of the master.	Release the data storage access lock. Or deactivate the setting of the data storage backup level of the master port.
		Back-up and re-store required due to data storage lock	Check the data storage lock.	Release the data storage lock.
10	The operation is unstable. (chattering)	Improper setting (mounting) position	Check if the detection is performed close to the limit of the Auto switch operating range.	Move the Auto switch to the correct position (near the centre of the operating range).
		Displacement from the set position	Check for looseness of the Auto switch mounting bracket and the mounting screws.	Fix at the correct position using the appropriate torque (Tightening torque: 0.05 to 0.15 Nm)
		Incorrect wiring	Check the condition of the wiring connection (connector contact pin and crimping terminal).	Correct the wiring (Perform wiring of the connection again).
		Breakage of lead wire	Check the repeated bending stress/tension applied to a part of the lead wire.	Correct the wiring (Adjust tensile force and enlarge bending radius.)

Maintenance

How to reset the product after a power cut or when the power has been unexpectedly removed

Regarding set up, contents of the program may be maintained by customer's application systems.
Be sure to confirm safety when returning operation of the cylinder and actuator because it could have been stopped in an unstable condition.

Specifications

Model		D-MP025∗	D-MP050∗	D-MP100∗	D-MP200∗
Measuring range		25 mm±1 mm	50 mm±1 mm	100 mm±1 mm	200 mm±1 mm
Power supply voltage		15 to 30 VDC, ripple (p-p) 10% or below (with power supply polarity protection)			
Current consumption		48 mA or less (when no load is applied)			
Repeatability *1 *2		0.1 mm (@25 °C)			
Resolution		0.05 mm			
Linearity *2		±0.3 mm (@25 °C)			
Switch output		NPN or PNP 1 output (push-pull)			
	Max. load current	40 mA			
	Internal voltage drop	2 V or less			
	Leakage current	NPN: 0.5 mA or less at load resistance 3 kΩ, 1.5 mA or less at load resistance 750 Ω			
		PNP: 0.1 mA or less			
	Short circuit protection	Yes			
Analogue current output *3	Output current	4 to 20 mA			
	Max. load resistance	500 Ω			
Analogue voltage output *3	Output voltage	0 to 10 V			
	Min. load resistance	2 kΩ			
Lead wire		PUR 4 core ϕ2.6 0.08 mm^2			
Standards		CE marking (EMC directive • RoHS directive), UL			
Impact resistance		300 m/s^2			
Insulation resistance		50 MΩ or more with 500 VDC Ohmmeter			
Withstand voltage		1000 VAC 1 minute			
Ambient temperature		-10 to 60 °C			
Enclosure		IEC60529 IP67			
IO-Link	Version	V1.1			
	Communication speed	COM3 (230.4 kbps)			
	Min. cycle time	1 ms			
	Process data size	Input: 2 byte, Output: 0 byte			
	Device ID	125 hex	126 hex	127 hex	128 hex
	Vendor ID	83 hex			

∗1: Repeatability of magnetic movement in one direction.

∗2: Varies depending on the operating conditions.

∗3: Switching between analogue voltage/current can be set.

■Dimensions

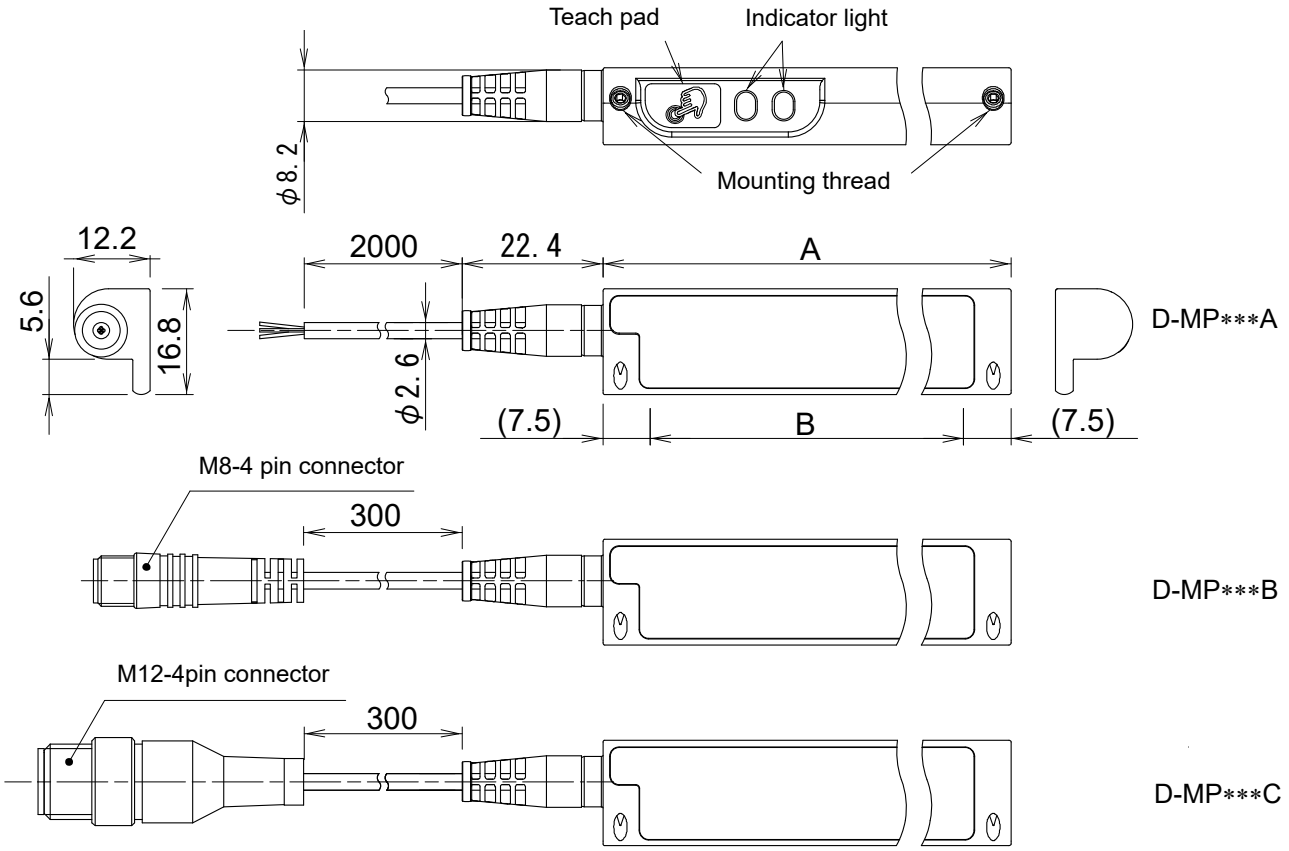

(mm)

Model	A	B
		Detectable range
D-MP025*	40.5	25
D-MP050*	64.9	50
D-MP100*	114.9	100
D-MP200*	214.7	200

Revision history
A: Contents revised in several places [June 2019] B: Revised content in accordance with Safety Instructions. [April 2024] C: Change of Device Access Lock Description. [November 2026]

SMC Corporation

Tel: + 81 3 5207 8249 Fax: +81 3 5298 5362
URL https://www.smcworld.com

Note: Specifications are subject to change without prior notice and any obligation on the part of the manufacturer.
© SMC Corporation All Rights Reserved

No.D-※S-OMU0002-B