Doc. No. AW∗-OMX0057-D

Operation Manual

PRODUCT NAME

Filter Regulator

MODEL / Series / Product Number

AW20(K)-(F,N)01～(F,N)02(B,C,E,E1,E2,E3,E4,E5,E6,E7,E8,E9,E0,G,H,M)
(-1,2,6,C,J,N,R,Z,ZA)-D

AW30(K)-(F,N)02～(F,N)03(B,C,D,E,E1,E2,E3,E4,E5,E6,E7,E8,E9,E0,G,H,M)
(-1,2,6,8,J,N,R,W,Z,ZA)-D

AW40(K)-(F,N)02～(F,N)04(B,C,D,E,E1,E2,E3,E4,E5,E6,E7,E8,E9,E0,G,H,M)
(-1,2,6,8,J,N,R,W,Z,ZA)-D

AW40(K)-(F,N)06(B,C,D,E,E1,E2,E3,E4,E5,E6,E7,E8,E9,E0,G,H,M)
(-1,2,6,8,J,N,R,W,Z,ZA)-D

AW60(K)-(F,N)06～(F,N)10(B,C,D,E,E1,E2,E3,E4,E5,E6,E7,E8,E9,E0,G,M)
(-1,2,6,8,J,N,R,W,Z,ZA)-D

SMC Corporation

Contents

Page

1. Safety Instructions 2
2. Application 9
3. Standard Specifications 9
4. How to Order 10
5. Options 12
6. Structural Drawing and Replacement Parts 14
7. Bowl Assembly Specifications 16
8. Assembly of Optional Parts 24
9. Operation and Adjustment 26
10. Trouble Shooting 29
11. How to Replace the Components 31
    - 11-1. Diaphragm Assembly Replacement 31
    - 11-2. Bowl Assembly Replacement 32
    - 11-3. Element Assembly Replacement 35
    - 11-4. Valve Assembly Replacement 36
    - 11-5. Square Embedded Type Pressure Gauge Replacement 39
    - 11-6. Blanking Plate Assembly Replacement 40
    - 11-7. Check Valve Assembly Replacement 41
    - 11-8. Plug (with O-ring) Replacement 42
    - 11-9. Plug Assembly Replacement 43
12. Disassembly Drawing 44
13. Dimensions 48

Safety Instructions

These safety instructions are intended to prevent hazardous situations and/or equipment damage. These instructions indicate the level of potential hazard with the labels of **"Caution," "Warning"** or **"Danger."** They are all important notes for safety and must be followed in addition to International Standards (ISO/IEC)*1), and other safety regulations.

*1) ISO 4414: Pneumatic fluid power - General rules and safety requirements for systems and their components
ISO 4413: Hydraulic fluid power - General rules and safety requirements for systems and their components
IEC 60204-1: Safety of machinery - Electrical equipment of machines - Part 1: General requirements
ISO 10218-1: Robots and robotic devices - Safety requirements for industrial robots - Part 1:Robots
etc.

Danger	**Danger** indicates a hazard with a high level of risk which, if not avoided, will result in death or serious injury.
Warning	**Warning** indicates a hazard with a medium level of risk which, if not avoided, could result in death or serious injury.
Caution	**Caution** indicates a hazard with a low level of risk which, if not avoided, could result in minor or moderate injury.

Warning

1. The compatibility of the product is the responsibility of the person who designs the equipment or decides its specifications.

Since the product specified here is used under various operating conditions, its compatibility with specific equipment must be decided by the person who designs the equipment or decides its specifications based on necessary analysis and test results. The expected performance and safety assurance of the equipment will be the responsibility of the person who has determined its compatibility with the product. This person should also continuously review all specifications of the product referring to its latest catalog information, with a view to giving due consideration to any possibility of equipment failure when configuring the equipment.

2. Only personnel with appropriate training should operate machinery and equipment.

The product specified here may become unsafe if handled incorrectly. The assembly, operation and maintenance of machines or equipment including our products must be performed by an operator who is appropriately trained and experienced.

3. Do not service or attempt to remove product and machinery/equipment until safety is confirmed.

1. The inspection and maintenance of machinery/equipment should only be performed after measures to prevent falling or runaway of the driven objects have been confirmed.
2. When the product is to be removed, confirm that the safety measures as mentioned above are implemented and the power from any appropriate source is cut, and read and understand the specific product precautions of all relevant products carefully.
3. Before machinery/equipment is restarted, take measures to prevent unexpected operation and malfunction.

4. Our products cannot be used beyond their specifications. Our products are not developed, designed, and manufactured to be used under the following conditions or environments. Use under such conditions or environments is not covered.

1. Conditions and environments outside of the given specifications, or use outdoors or in a place exposed to direct sunlight.
2. Use for nuclear power, railways, aviation, space equipment, ships, vehicles, military application, equipment affecting human life, body, and property, fuel equipment, entertainment equipment, emergency shut-off circuits, press clutches, brake circuits, safety equipment, etc., and use for applications that do not conform to standard specifications such as catalogs and operation manuals.
3. Use for interlock circuits, except for use with double interlock such as installing a mechanical protection function in case of failure. Please periodically inspect the product to confirm that the product is operating properly.

Safety Instructions

⚠ Caution

We develop, design, and manufacture our products to be used for automatic control equipment, and provide them for peaceful use in manufacturing industries.
Use in non-manufacturing industries is not covered.
Products we manufacture and sell cannot be used for the purpose of transactions or certification specified in the Measurement Act.
The new Measurement Act prohibits use of any unit other than SI units in Japan.

Limited warranty and Disclaimer/Compliance Requirements

The product used is subject to the following “Limited warranty and Disclaimer” and “Compliance Requirements”. Read and accept them before using the product.

Limited warranty and Disclaimer

1. The warranty period of the product is 1 year in service or 1.5 years after the product is delivered, whichever is first.*2)
   Also, the product may have specified durability, running distance or replacement parts. Please consult your nearest sales branch.
2. For any failure or damage reported within the warranty period which is clearly our responsibility, a replacement product or necessary parts will be provided.
   This limited warranty applies only to our product independently, and not to any other damage incurred due to the failure of the product.
3. Prior to using SMC products, please read and understand the warranty terms and disclaimers noted in the specified catalog for the particular products.

***2) Vacuum pads are excluded from this 1 year warranty.**
A vacuum pad is a consumable part, so it is warranted for a year after it is delivered.
Also, even within the warranty period, the wear of a product due to the use of the vacuum pad or failure due to the deterioration of rubber material are not covered by the limited warranty

Compliance Requirements

1. The use of SMC products with production equipment for the manufacture of weapons of mass destruction (WMD) or any other weapon is strictly prohibited.
2. The exports of SMC products or technology from one country to another are governed by the relevant security laws and regulations of the countries involved in the transaction. Prior to the shipment of a SMC product to another country, assure that all local rules governing that export are known and followed.

Precautions for Design

⚠ **Warning**

(1) Do not use the product if no leakage is allowed due to the environment, or if the fluid is not air.

(2) Polycarbonate resin is used for the external parts including the bowl. Organic solvents including thinner, acetone, alcohol and ethylene chloride; chemicals including sulphuric acid, nitric acid and hydrochloric acid; cutting oil, synthetic oils, ester-based compressor oil, alkali, kerosene, gasoline, lock material of screw are harmful. Do not use the product where these are present.

Chemical resistance of polycarbonate and nylon bowl

Type	Chemical name	Application examples	Material	
			Polycarbonate	Nylon
Acid	Hydrochloric acid Sulfuric acid Phosphoric acid Chromic acid	Acid washing liquid for metals	△	×
Alkaline	Sodium hydroxide (Caustic soda) Potash Calcium hydroxide (Slack lime) Ammonia water Carbonate of soda	Degreasing of metals Industrial salts Water-soluble cutting oil	×	○
Inorganic salts	Sodium sulfide Potassium nitrate Sulfate of soda	-	×	△
Chlorine solvents	Carbon tetrachloride Chloroform Ethylene chloride Methylene chloride	Cleaning liquid for metals Printing ink Dilution	×	△
Aromatic series	Benzene Toluene Paint thinner	Coatings Dry cleaning	×	△
Ketone	Acetone Methyl ethyl ketone Cyclohexane	Photographic film Dry cleaning Textile industries	×	×
Alcohol	Ethyl alcohol IPA Methyl alcohol	Antifreeze Adhesives	△	×
Oil	Gasoline Kerosene	-	×	○
Ester	Phthalic acid dimethyl Phthalic acid diethyl Acetic acid	Synthetic oil Anti-rust additives	×	○
Ether	Methyl ether Ethyl ether	Brake oil additives	×	○
Amino	Methyl amino	Cutting oil Brake oil additives Rubber accelerator	×	×
Others	Thread-lock fluid Sea water Leak tester	-	×	△

○: Essentially safe. △: Some effects may occur. ×: Effects will occur.

When the above factors are present or there is some doubt, use a metal bowl for safety.

(3) Avoid the application where charge and discharge of pressure to/from a standard bowl is switched frequently. This may damage the bowl. A metal bowl is recommended in these cases.
(4) Shield from ultra violet light and radiation with protective cover.
(5) A safety device needs to be installed if output pressure is exceeding the set pressure, otherwise this can cause breakage of outlet device and equipment or lead to malfunction.

⚠ **Caution**

(1) AD27-D with auto drain may have leakage of accumulated drain during pressure exhaust (this leakage is allowed in their constructions and not considered failure). Be sure to connect piping for drain.
(2) Allowed air consumption from the exhaust port is 0.1 L/min(ANR) or less.

Selection

⚠ **Warning**

(1) Grease used on the internal sliding parts and seals may flow to the outlet side.
(2) N.O. type auto drain should be operated under the following conditions to avoid malfunction. Operating compressor: 0.75 kW or more, Discharged flow rate: 100 L/min (ANR) or more When using 2 or more auto drains, multiply the value above by the number of auto drains to find the capacity of the compressors you will need. For example, when using 2 auto drains, 1.5 kW (200 L/min (ANR)) of the compressor capacity is required. The operating pressure should be 0.1 MPa or more.
(3) N.C. type auto drain should be operated under the following conditions to avoid malfunction. Operating pressure for AD27: 0.1 MPa or more, for AD37 and AD47: 0.15 MPa or more.
(4) Residual pressure of product without backflow function is released unstably even though the inlet pressure is released (residual pressure might be left in the product). Please select product with backflow function to release the residual pressure completely.
(5) Long absence of operation or operation with sealed circuit or balancing circuit on the outlet side may cause set pressure fluctuation.
(6) Set range of outlet pressure shall be 85% or less of the inlet pressure. Operating at a setting exceeding 85% causes the outlet pressure to be easily affected by fluctuations in flow rate and inlet pressure, leading to instability.
(7) Since the safety margin is calculated to the maximum value of the set pressure range shown in the specification table, the pressure setting may be over the maximum value. However, use the product within the specified range.
(8) Cannot be used in circuits that requires high exhaust sensitivity or set precision.

Installation

⚠ **Warning**

(1) Do not drop or apply impact during transportation or installation. It will cause damage to the product and result in operation failure.
(2) Do not install in areas of high humidity or high temperature. Operation outside of the product specification range may cause damage to the product or operation failure, or shorten the product life.
(3) Connect the product ensuring the direction of "1"(IN) and "2"(OUT) for air direction and indicated arrow. Incorrect connections may cause malfunction.
(4) Install with adequate space for maintenance beneath the product. Refer to section [13. Dimensions] for necessary space.
(5) Install vertically so that outlet of drain is downward. It cannot be used in horizontal or upward direction as it may cause operation failure.

(6) When attaching the bowl, ensure the lock button position aligns with the dent in the body on the front (or back). Misalignment may cause the bowl to detach or damage.

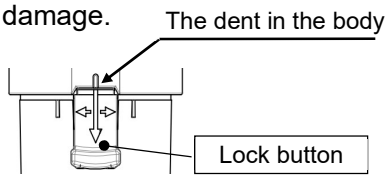

Adjustment

⚠ Warning

(1) Adjust the set pressure ensuring correct inlet and outlet pressures. Turning the knob excessively can cause damage to the internal parts.

(2) Do not use tools on the pressure regulator knob as this may cause damage. It must be operated manually.

⚠ Caution

(1) For the product with a pressure gauge, do not apply pressure exceeding the maximum scale of the pressure gauge in order to protect the gauge.

(2) Adjust the pressure whilst the pressure is increasing. Pressure may become lower than the set pressure if adjusted by decreasing the value. Rotate the knob clockwise to increase the set pressure. Counterclockwise to decrease the pressure. Moreover, please lock the knob after setting pressure.

(3) For the filter regulator with backflow function, upstream pressure needs to be higher than downstream pressure by 0.05 MPa or more.

(4) Outlet pressure may rise when the inlet pressure is discharged and resupplied after pressure setting. In this case, consume air at the outlet which will bring the pressure closer to the set pressure.

(5) Outlet pressure may change if the product is used for a long period of time. Please confirm the set pressure regularly.

(6) When pressure difference between the inlet side and the outlet side is large, chattering may occur. In that case, please reduce the pressure difference between the inlet and the outlet.

Piping

⚠ Warning

(1) Before piping is connected, it should be thoroughly blown out with air (flushing) or washed to remove chips, cutting oil and solid foreign material from inside the pipe. Contamination of piping may cause damage or malfunction.

(2) When screwing together pipes and fittings, etc., be certain that chips from the pipe threads and sealant do not get inside the pipe. When a sealant tape is used, leave 1 thread ridges exposed at the end of the threads.

(3) Connect piping/fittings using the recommended torque while holding the female thread side tightly. Insufficient tightening torque leads to cause of loosening or sealing failure, and excessive tightening torque leads to cause of breakage of screws. Tightening without holding female thread applies an excessive force to the piping bracket directly, leading to breakage.

Recommended tightening torque for the port Unit: N・m

Thread size	1/8	1/4	3/8	1/2	3/4	1
Torque	3 to 5	8 to 12	15 to 20	20 to 25	28 to 30	36 to 38

Recommended tightening torque for the pressure gauge port Unit: N・m

Thread size	1/8
Torque	3 to 5

*Please refer to "11-8. Plug (with O-ring) Replacement", Replacement parts For the tightening torque of the plug (with O-ring).

(4) Before using an SMC fitting and S coupler, please refer to "Tightening the threaded portion of the connection thread" of the Fittings & Tubing Precautions.

(5) Do not apply torsion or bending moment other than the weight of the product itself. External piping needs to be supported separately as it may cause breakage. Non-flexible piping like steel tube is susceptible to excessive moment load or vibration. Insert flexible tubes to prevent this.

(6) Drain guide is not equipped with valve function. Be sure to connect piping for drain. No piping for drain allows the drain and compressed air to exhaust freely. Also, the piping installation should be performed with drain guide held by spanner to prevent breakage of bowl.

(7) The piping for drain from auto drain should be connected under the following requirements to avoid operating failure.
Tubing for AD27-D: I.D. ø2.5 (ø3/32") or larger, Length 5 m (200 inch) or shorter
Tubing for AD37, 47(N)-D: I.D. ø4 (ø3/16") or larger, Length 5 m (200 inch) or shorter
Tubing for AD38, 48(N)-D: I.D. ø6.5 (ø1/4") or larger, Length 5 m (200 inch) or shorter

Air Source

⚠ **Warning**

(1) Use clean air. Do not use compressed air containing chemicals, organic solvent, synthetic oil or corrosive gas as it may be cause of breakage of components or operation failure.

(2) Air containing too much moisture may cause malfunction. Install an air drier or aftercooler before the product.

Maintenance

⚠ **Warning**

(1) Release the pressure in the product to the atmosphere when replacing parts or removing piping.

(2) Maintenance and checks should be done by following the procedure in this operation manual. Incorrect handling of the product may cause breakage or operation failure of the equipment or device.

(3) Perform periodical check to find cracks, flaws or other deterioration on resin bowl. If any of these appear, replace with a new or metal bowl. Otherwise, breakage may occur. Investigate and/or review the operating conditions if necessary.

(4) Check for dirt in resin bowl periodically. If any dirt is seen, replace with new bowl. If removing dirt by washing the resin bowl, never use washing material other than neutral detergent. Otherwise, the bowl is damaged.

(5) Open and close the drain cock manually. The use of tools can result in damage to the product.

(6) Replace the element every 2 years or when the differential pressure (pressure drop) becomes 0.1 MPa, whichever comes first, to prevent damage to the element.

(7) Discharge drain from the bowl before the drain level in the bowl reaches baffle. Refer to section [9. Operation and Adjustment] for discharging of drain.

(8) When using the filter regulator with backflow function between a solenoid valve and an actuator, check the pressure gauge periodically. Sudden pressure fluctuations may shorten the durability of the pressure gauge. A digital pressure gauge is recommended for such applications or as deemed necessary.

(9) When removing the bowl, ensure the lock button pushes down from the dent in the body to release the lock before proceeding. It may damage the lock button.

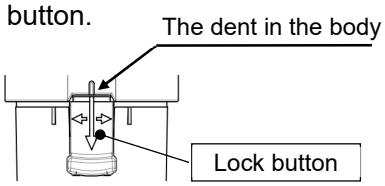

⚠ **Caution**

(1) If an emergency countermeasure is to be taken during setting failure or exhaust leakage, the internal valve seating part should be checked. If failure such as foreign matter is found, remove it before performing the emergency countermeasure.

(2) Check the element periodically and replace it with a new one if necessary. If it is found that outlet pressure drops lower than the normal condition or the flow is restricted during operation, check the condition of the element.

(3) For the N.C. type auto drain, when there is no pressure, drain which does not operate the auto drain mechanism will remain in the bowl. It is recommended to release the residual drain manually at the end of the working day.

2. Application

This product aims at eliminating excess saturated water and solid foreign material in the air line, while also controlling the pressure of the air line.

3. Standard Specifications

Model		AW20-D	AW30-D	AW40-D	AW40-06-D	AW60-D
Port size		1/8, 1/4	1/4, 3/8	1/4, 3/8, 1/2	3/4	3/4, 1
Pressure gauge port size Note 1)		1/8				
Fluid		Air				
Ambient and fluid temperature Note 2)		-5 to 60 °C (with no freezing)				
Proof pressure		1.5 MPa				
Max. operating pressure		1.0 MPa				
Min. operating pressure of auto drain	N.C.	0.1 MPa	0.15 MPa			
	N.O.	—	0.1 MPa			
Set pressure range		0.05 to 0.85 MPa				
Filtration rating		5 μm				
Compressed air quality class Note 3)		ISO8573-1: 2010 [6:4:4]				
Drain capacity		8 cm^3	25 cm^3	45 cm^3		
Bowl material		Polycarbonate				
Bowl guard		Semi-standard (Steel)	Standard (Polycarbonate)			
Construction		Relieving type				
Weight		0.18 kg	0.34 kg	0.64 kg	0.69 kg	1.76 kg

Note 1) Pressure gauge connection threads are not available for product with a square embedded type pressure gauge or with a digital pressure switch.
Note 2) -5 to 50°C for the products with the digital pressure switch.
Note 3) Based on ISO8573-1:2010 Compressed air - Part 1: Contaminants and purity classes.
The compressed air quality class on the inlet side is [7:4:4].

4. How to Order

AW 30 K - 03 BE - - D

❶ ❷ ❸ ❹ ❺ ❻

				Symbol	Description	❶ Body size			
						20	30	40	60
❷	With backflow function			Nil	Without backflow function	●	●	●	●
				K	With backflow function	●	●	●	●
❸	Thread type			Nil	Rc	●	●	●	●
				N	NPT	●	●	●	●
				F	G	●	●	●	●
❹	Port size			01	1/8	●	-	-	-
				02	1/4	●	●	●	-
				03	3/8	-	●	●	-
				04	1/2	-	-	●	-
				06	3/4	-	-	●	●
				10	1	-	-	-	●
❺ Note1) Note2)	Option	a	Mounting	Nil	Without mounting option	●	●	●	●
				B	With bracket	●	●	●	●
				H	With set nut (for panel mount)	●	●	●	-
		b	Float type auto drain	Nil	Without auto drain	●	●	●	●
				C	N.C. (Normally closed) Drain port is closed when pressure is not supplied.	●	●	●	●
				D	N.O. (Normally opened) Drain port is opened when pressure is not supplied.	-	●	●	●
		c	Pressure gauge	Nil	Without pressure gauge	●	●	●	●
				E	Square embedded type pressure gauge (with limit indicator)	●	●	●	●
				G	Round type pressure gauge (with limit indicator)	●	●	●	●
				M	Round type pressure gauge (with color zone)	●	●	●	●
			Digital pressure switch	E1	NPN output / Wiring bottom entry	●	●	●	●
				E2	NPN output / Wiring top entry	●	●	●	●
				E3	PNP output / Wiring bottom entry	●	●	●	●
				E4	PNP output / Wiring top entry	●	●	●	●
				E5	Analog voltage output / Wiring bottom entry	●	●	●	●
				E6	Analog voltage output / Wiring top entry	●	●	●	●
				E7	Analog current output / Wiring bottom entry	●	●	●	●
				E8	Analog current output / Wiring top entry	●	●	●	●
				E9	IO-Link or switch: 1 output / Wiring top entry	●	●	●	●
				E0	IO-Link or switch: 1 output / electrical entry: Top	●	●	●	●

❻ Note1) Note2)	Semi-standard	d	Set pressure	Nil	0.05 to 0.85 MPa setting	●	●	●	●
				1	0.02 to 0.2 MPa setting	●	●	●	●
		e	Bowl	Nil	Polycarbonate bowl	●	●	●	●
				2	Metal bowl	●	●	●	●
				6	Nylon bowl	●	●	●	●
				8	Metal bowl with level gauge	-	●	●	●
				C	With bowl guard	●	-	-	-
				6C	With bowl guard (Nylon bowl)	●	-	-	-
		f	Drain port	Nil	With drain cock	●	●	●	●
				J	Drain guide 1/8	●	-	-	-
					Drain guide 1/4	-	●	●	●
				W	Drain cock with barb fitting	-	●	●	●
		g	Exhaust mechanism	Nil	Relieving type	●	●	●	●
				N	Non-relieving type	●	●	●	●
		h	Flow direction	Nil	Flow direction: Left to right	●	●	●	●
				R	Flow direction: Right to left	●	●	●	●
		i	Pressure unit Temp. unit	Nil	Pressure unit: MPa Temp. unit: °C	●	●	●	●
				Z	Pressure unit: psi Temp. unit: °F	○ Note 3)	○ Note 3)	○ Note 3)	○ Note 3)
				ZA	Digital pressure switch: With unit selection function	△ Note 4)	△ Note 4)	△ Note 4)	△ Note 4)

Note 1) Select one each for a to i.

Note 2) When more than one symbol is required, indicate in numerical order, then alphabetical order.
Example) AW30K-03BE-1NR-D

Note 3) ○: For NPT thread type only.

Note 4) △: Select with an option E1, E2, E3, E4, E5, E6, E7, E8, E9 or E0.

5. Options

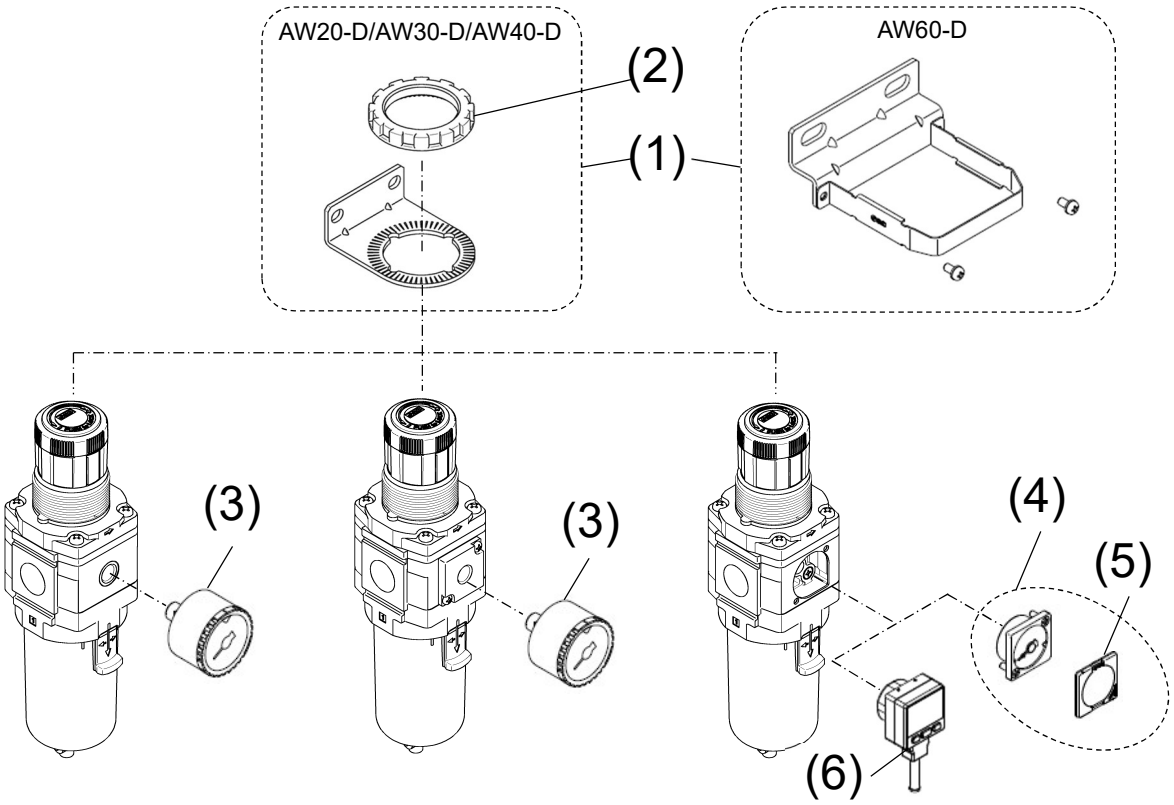

Without pressure gauge/
With round type pressure gauge
(Backflow function: No)

Without pressure gauge/
With round type pressure gauge
(Backflow function: Yes)

With square embedded type pressure gauge/
With digital pressure switch
(Backflow function: No / Yes)

Options

No.	Part name	Piping thread type	Semi-standard specification	Part No.				
				AW20-D	AW30-D	AW40-D	AW40-06-D	AW60-D
(1)	Bracket assembly Note 1)	-	-	AW23P-270AS	AR33P-270AS	AR43P-270AS		AR54P-270AS Note 4)
(2)	Set nut	-	-	AR23P-260S	AR33P-260S	AR43P-260S		-
(3)	Pressure gauge Note 2) (Round type)	Rc	-	G36-10-01		G46-10-01		
		NPT	-	G36-10-N01		G46-10-N01		
			Z : Both in MPa and psi	G36-P10-N01-X30		G46-P10-N01-X30		
		G	-	G36-10-01		G46-10-01		
	Pressure gauge Note 2) (Round type with color zone)	Rc	-	G36-10-01-L		G46-10-01-L		
		NPT	-	G36-10-N01-L		G46-10-N01-L		
		G	-	G36-10-01-L		G46-10-01-L		
(4)	Square embedded type pressure gauge Note 3) (Including part (5))	-	-	GC3-10AS-D				
		NPT	Z : Both in MPa and psi	GC3-P10AS-D-X30				
(5)	Pressure gauge cover assembly	-	-	136150A				
(6)	Digital pressure switch (with accessories for mounting)			<Common for all sizes>				
				Output	Wiring bottom entry		Wiring top entry	
		-	-	NPN	ISE35-N-25-MLA-X523		ISE35-R-25-MLA-X523	
				PNP	ISE35-N-65-MLA-X523		ISE35-R-65-MLA-X523	
				Analog voltage	ISE35-N-26-MLA-X523		ISE35-R-26-MLA-X523	
				Analog current	ISE35-N-28-MLA-X523		ISE35-R-28-MLA-X523	
				IO-Link	ISE35-N-L-MLA-X523		ISE35-R-L-MLA-X523	
		-	ZA : Unit selection function	NPN	ISE35-N-25-LA-X523		ISE35-R-25-LA-X523	
				PNP	ISE35-N-65-LA-X523		ISE35-R-65-LA-X523	
				Analog voltage	ISE35-N-26-LA-X523		ISE35-R-26-LA-X523	
				Analog current	ISE35-N-28-LA-X523		ISE35-R-28-LA-X523	
				IO-Link	ISE35-N-L-LA-X523		ISE35-R-L-LA-X523	
		NPT	Z : Unit selection function Initial setting: psi	NPN	ISE35-N-25-PLA-X523		ISE35-R-25-PLA-X523	
				PNP	ISE35-N-65-PLA-X523		ISE35-R-65-PLA-X523	
				Analog voltage	ISE35-N-26-PLA-X523		ISE35-R-26-PLA-X523	
				Analog current	ISE35-N-28-PLA-X523		ISE35-R-28-PLA-X523	
				IO-Link	ISE35-N-L-PLA-X523		ISE35-R-L-PLA-X523	

Note) The numbers in the table and structural drawings are consistent with the numbers in sections [11. How to Replace the Components] and [12. Disassembly Drawing].

Note 1) This is an assembly of a bracket and set nut (2).

Note 2) Part number for 0.2 MPa:
G36-4-01 (Rc type) / G36-4-N01 (NPT type) / G36-P4-N01-X30 (NPT, Z type).
G46-4-01 (Rc type) / G46-4-N01 (NPT type) / G46-P4-N01-X30 (NPT, Z type).

Note 3) With O-ring (1 pc.) and mounting screws (2 pcs.).
Part number for 0.2 MPa: GC3-4AS-D (Rc, NPT type) / GC3-P4AS-D-X30 (NPT, Z type).

Note 4) Assembly of 2 types of bracket and 2 set screws.

6. Structural Drawing and Replacement Parts

Structural drawing / Common replacement parts		
AW20-D	AW30-D/AW40-D	AW60-D

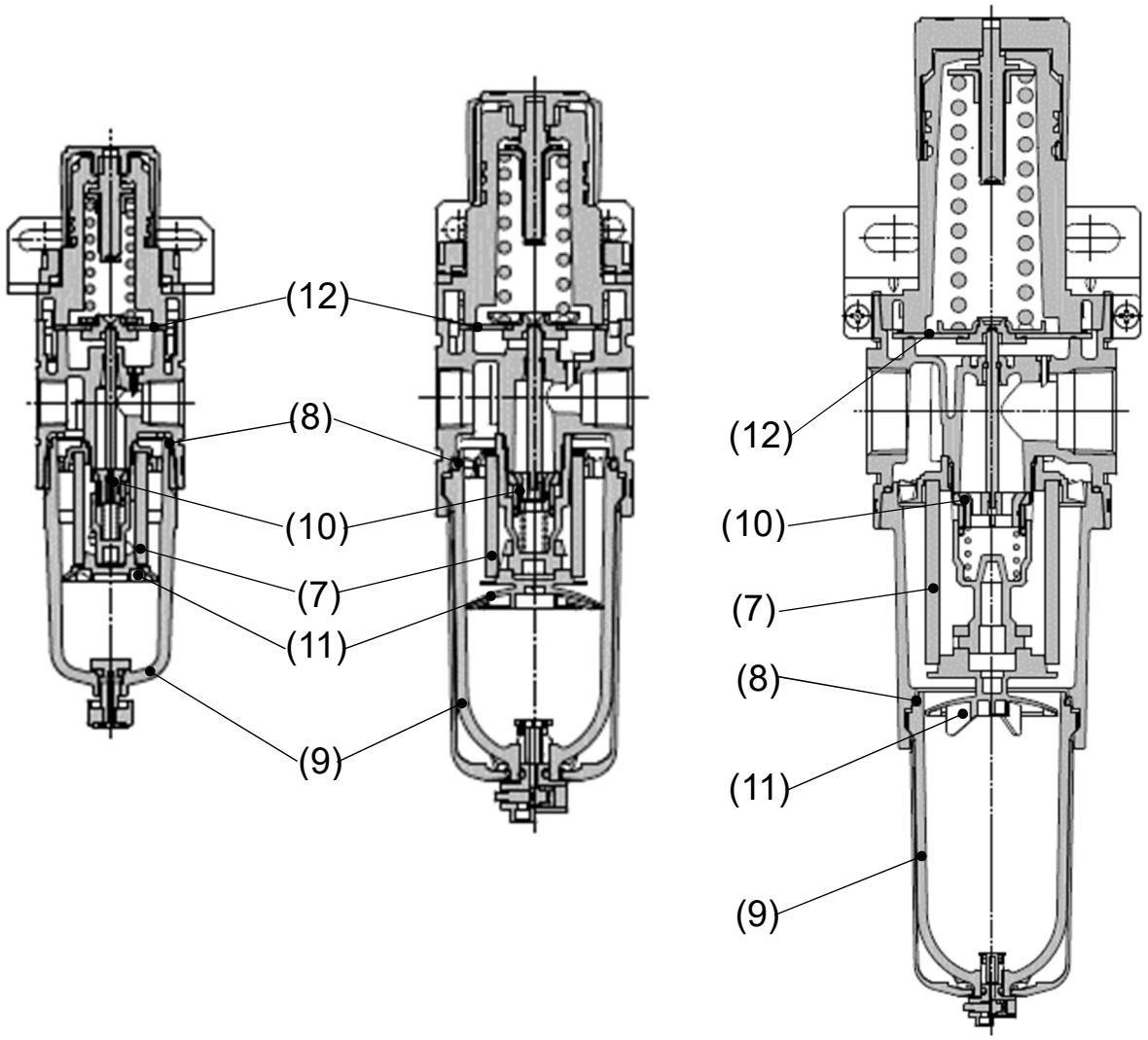

Without pressure gauge / With round type pressure gauge (Backflow function: No)	With square embedded type pressure gauge / With digital pressure switch (Backflow function: No)	Without pressure gauge /With round type pressure gauge With square embedded type pressure gauge / With digital pressure switch (Backflow function: Yes)
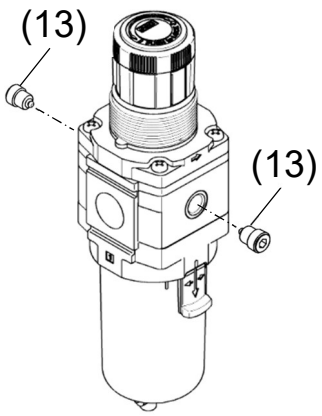	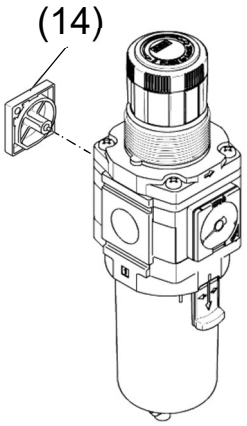	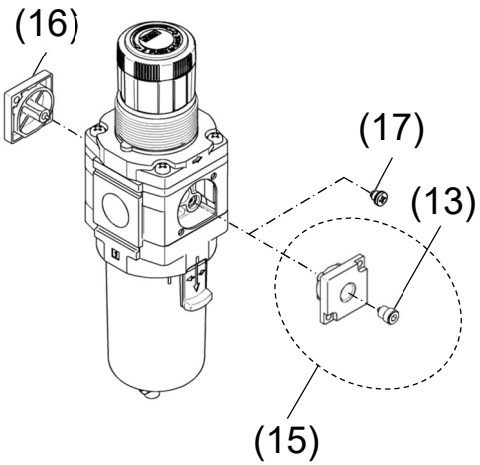

Replacement parts

No.	Part name	Piping thread type	Semi-standard specification	Part No.				
				AW20-D	AW30-D	AW40-D	AW40-06-D	AW60-D
(7)	Element	-	-	AF20P-060S	AF30P-060S	AF40P-060S		AW60P-060S
(8)	Bowl seal	-	-	C2SFP-260S	C32FP-260S	C42FP-260S		
(9)	Bowl assembly	Refer to section [7. Bowl Assembly Specifications].						
	Auto drain (N.C.)							
	Auto drain (N.O.)							
(10)	Valve assembly	-	-	AW24P-060AS	AW34P-060AS	AW44P-060AS	AW49P-060AS	AW64P-060AS
(11)	Baffle	-	-	AF24P-040S	AF34P-040S	AF44P-040S		AW64P-030S
(12)	Diaphragm assembly	-	- : Relief	AR24P-150AS	AR34P-150AS	AR44P-150AS		AR54P-150AS
			N : Non-relief	AR24P-150AS-N	AR34P-150AS-N	AR44P-150AS-N		AR54P-150AS-N
(13)	Plug (with O-ring)	Rc / G	-	AR24P-370AS-01				
		NPT	-	AR24P-370AS-N01				
(14)	Blanking plate assembly	-	-	AR24P-250AS				
(15)	Plug assembly (Including part (13))	Rc	-	AR24P-320AS-01				
		NPT	-	AR24P-320AS-N01				
		G	-	AR24P-320AS-F01				
(16)	Check valve assembly	-	-	AR24KP-020AS				
(17)	Check valve plug assembly	-	-	AR20KP-090AS				

Note) The numbers in the table and structural drawings are consistent with the numbers in sections [11. How to Replace the Components] and [12. Disassembly Drawing].

7. Bowl Assembly Specifications

1. Bowl assembly / auto drain for AW20-D

Option symbol	-		-	
Semi-standard symbol	-	6	C	6C
Appearance and part No.				

Semi-standard: - (Standard)

Piping port thread type	(9) Part No.
Rc	C2SF-D
G	
NPT	C2SF(-Z)-D

Semi-standard: 6

Piping port thread type	(9) Part No.
Rc	C2SF-6-A
G	
NPT	C2SF-6(Z)-A

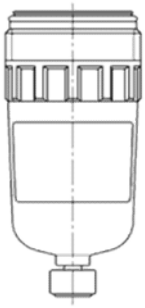

Semi-standard: C

Piping port thread type	(9) Part No.
Rc	C2SF-C-D
G	
NPT	C2SF-C(Z)-D

Semi-standard: 6C

Piping port thread type	(9) Part No.
Rc	C2SF-6C-A
G	
NPT	C2SF-6C(Z)-A

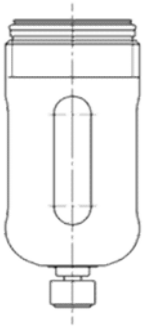

Option symbol	-		-	
Semi-standard symbol	J	6J	CJ	6CJ
Appearance and part No.				

Semi-standard: J

Piping port thread type	(9) Part No.
Rc	C2SF-J-D
G	C2SFF-J-D
NPT	C2SFN-J(Z)-D

Semi-standard: 6J

Piping port thread type	(9) Part No.
Rc	C2SF-6J-A
G	C2SFF-6J-A
NPT	C2SFN-6J(Z)-A

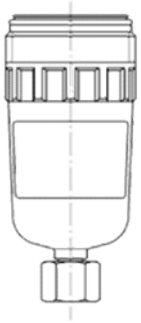

Semi-standard: CJ

Piping port thread type	(9) Part No.
Rc	C2SF-CJ-D
G	C2SFF-CJ-D
NPT	C2SFN-CJ(Z)-D

Semi-standard: 6CJ

Piping port thread type	(9) Part No.
Rc	C2SF-6CJ-A
G	C2SFF-6CJ-A
NPT	C2SFN-6CJ(Z)-A

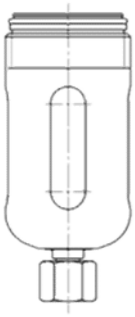

Option symbol	-	-
Semi-standard symbol	2	2J
Appearance and part No.		

Semi-standard: 2

Piping port thread type	(9) Part No.
Rc	C2SF-2-A
G	
NPT	C2SF-2(Z)-A

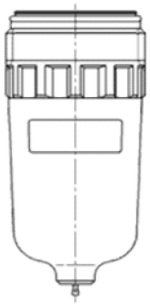

Semi-standard: 2J

Piping port thread type	(9) Part No.
Rc	C2SF-2J-A
G	C2SFF-2J-A
NPT	C2SFN-2J(Z)-A

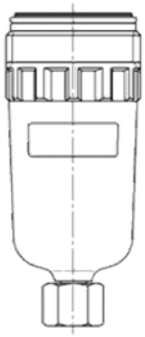

Option symbol	C Note 1)		C Note 1)	
Semi-standard symbol	-	6	C	6C

Appearance and part No.

Semi-standard: —

Piping port thread type	(9) Part No.
Rc	AD27-D
G	
NPT	AD27(-Z)-D

Semi-standard: 6

Piping port thread type	(9) Part No.
Rc	AD27-6-A
G	
NPT	AD27-6(Z)-A

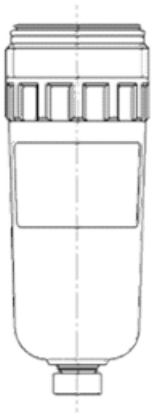

Semi-standard: C

Piping port thread type	(9) Part No.
Rc	AD27-C-D
G	
NPT	AD27-C(Z)-D

Semi-standard: 6C

Piping port thread type	(9) Part No.
Rc	AD27-6C-A
G	
NPT	AD27-6C(Z)-A

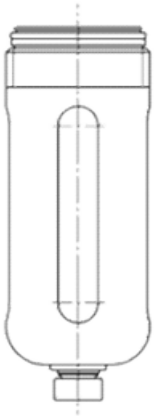

Option symbol	C Note 1)
Semi-standard symbol	2

Appearance and part No.

Semi-standard: 2

Piping port thread type	(9) Part No.
Rc	AD27-2-A
G	
NPT	AD27-2(Z)-A

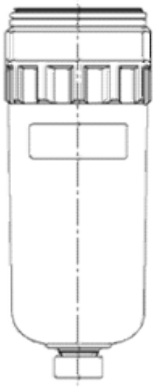

Note 1) Minimum operating pressure is 0.1 MPa.
Note 2) Part No. (9) includes Bowl seal (8). Refer to section [12. Disassembly Drawing].
Note 3) "Z" in Part No. (9) indicates semi-standard specifications. The pressure unit: psi. The temperature unit: °F.
Note 4) Refer to section [4. How to Order] for option and semi-standard symbols.

2. Bowl assembly / auto drain for AW30-D

Option symbol	-		-	
Semi-standard symbol	-	6	J	6J

Appearance and part No.

Semi-standard: －(Standard)

Piping port thread type	(9) Part No.
Rc	C3SF-D
G	
NPT	C3SF(-Z)-D

Semi-standard: 6

Piping port thread type	(9) Part No.
Rc	C3SF-6-D
G	
NPT	C3SF-6(Z)-D

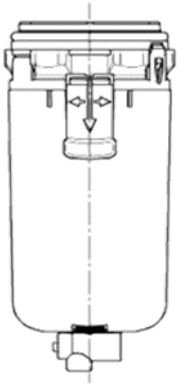

Semi-standard: J

Piping port thread type	(9) Part No.
Rc	C3SF-J-D
G	C3SFF-J-D
NPT	C3SFN-J(Z)-D

Semi-standard: 6J

Piping port thread type	(9) Part No.
Rc	C3SF-6J-D
G	C3SFF-6J-D
NPT	C3SFN-6J(Z)-D

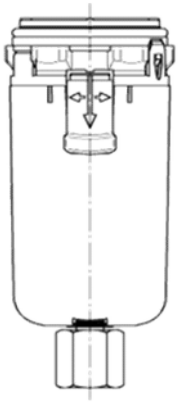

Option symbol	-	
Semi-standard symbol	W	6W

Appearance and part No.

Semi-standard: W

Piping port thread type	(9) Part No.
Rc	C3SF-W-D
G	
NPT	C3SF-W(Z)-D

Semi-standard: 6W

Piping port thread type	(9) Part No.
Rc	C3SF-6W-D
G	
NPT	C3SF-6W(Z)-D

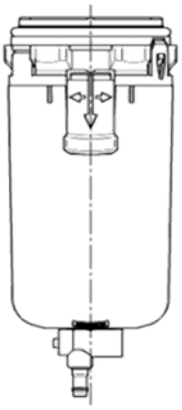

Option symbol	-	-
Semi-standard symbol	2	2J

Appearance and part No.

Semi-standard: 2

Piping port thread type	(9) Part No.
Rc	C3SF-2-A
G	
NPT	C3SF-2(Z)-A

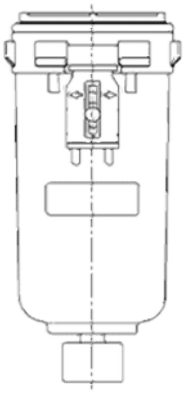

Semi-standard: 2J

Piping port thread type	(9) Part No.
Rc	C3SF-2J-A
G	C3SFF-2J-A
NPT	C3SFN-2J(Z)-A

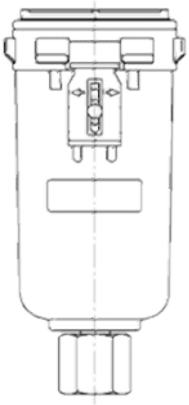

Option symbol	—	—
Semi-standard symbol	**8**	**8J**
Appearance and part No.	Semi-standard: 8 Piping port thread type / (9) Part No. Rc / G: C3LF-8-A NPT: C3LF-8(Z)-A 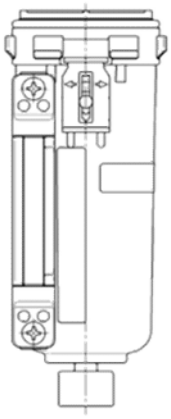	Semi-standard: 8J Piping port thread type / (9) Part No. Rc: C3LF-8J-A G: C3LFF-8J-A NPT: C3LFN-8J(Z)-A 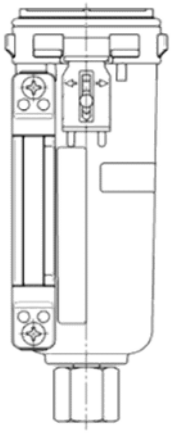

Option symbol	C Note 1)		C Note 1)
Semi-standard symbol	—	**6**	**2**
Appearance and part No.	Semi-standard: — Piping port thread type / (9) Part No. Rc / G: AD37-D NPT: AD37N(-Z)-D Semi-standard: 6 Piping port thread type / (9) Part No. Rc / G: AD37-6-D NPT: AD37N-6(Z)-D 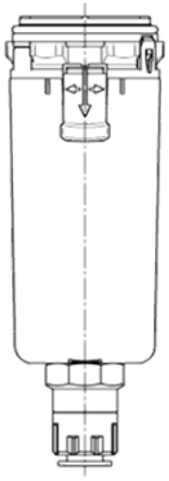		Semi-standard: 2 Piping port thread type / (9) Part No. Rc / G: AD37-2-A NPT: AD37N-2(Z)-A 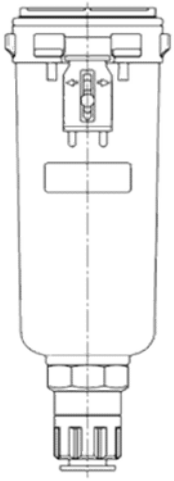

Option symbol	C Note 1)
Semi-standard symbol	**8**
Appearance and part No.	Semi-standard: 8 Piping port thread type / (9) Part No. Rc / G: AD37-8-A NPT: AD37N-8(Z)-A 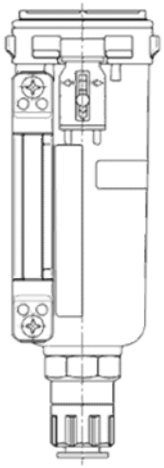

Note 1) Minimum operating pressure is 0.15 MPa.

Note 2) Part No. (9) includes Bowl seal (8). Refer to section [12. Disassembly Drawing].

Note 3) "Z" in Part No. (9) indicates semi-standard specifications. The pressure unit: psi. The temperature unit: °F.

Note 4) Refer to section [4. How to Order] for option and semi-standard symbols.

Option symbol	D Note 1)		D Note 1)
Semi-standard symbol	-	6	2
Appearance and part No.	Semi-standard: – Piping port thread type / (9) Part No. Rc / AD38-D G NPT / AD38N(-Z)-D Semi-standard: 6 Piping port thread type / (9) Part No. Rc / AD38-6-D G NPT / AD38N-6(Z)-D 		Semi-standard: 2 Piping port thread type / (9) Part No. Rc / AD38-2-A G NPT / AD38N-2(Z)-A 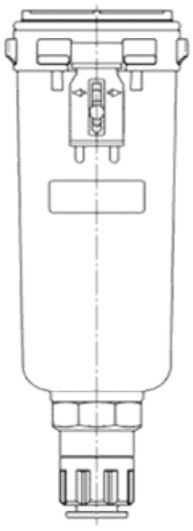

Option symbol	D Note 1)
Semi-standard symbol	8
Appearance and part No.	Semi-standard: 8 Piping port thread type / (9) Part No. Rc / AD38-8-A G NPT / AD38N-8(Z)-A 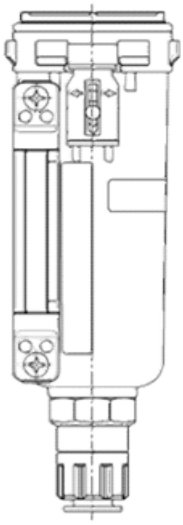

Note 1) Minimum operating pressure is 0.1 MPa.
Note 2) Part No. (9) includes Bowl seal (8). Refer to section [12. Disassembly Drawing].
Note 3) "Z" in Part No. (9) indicates semi-standard specifications. The pressure unit: psi. The temperature unit: ºF.
Note 4) Refer to section [4. How to Order] for option and semi-standard symbols.

3. Bowl assembly / auto drain for AW40-D, AW60-D

Option symbol	-		-	
Semi-standard symbol	-	6	J	6J
Appearance and part No.				

Semi-standard: －(Standard)

Piping port thread type	(9) Part No.
Rc	C4SF-D
G	
NPT	C4SF(-Z)-D

Semi-standard: 6

Piping port thread type	(9) Part No.
Rc	C4SF-6-D
G	
NPT	C4SF-6(Z)-D

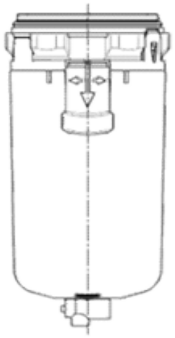

Semi-standard: J

Piping port thread type	(9) Part No.
Rc	C4SF-J-D
G	C4SFF-J-D
NPT	C4SFN-J(Z)-D

Semi-standard: 6J

Piping port thread type	(9) Part No.
Rc	C4SF-6J-D
G	C4SFF-6J-D
NPT	C4SFN-6J(Z)-D

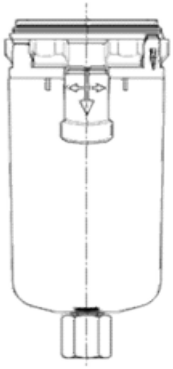

Option symbol	-	
Semi-standard symbol	W	6W
Appearance and part No.		

Semi-standard: W

Piping port thread type	(9) Part No.
Rc	C4SF-W-D
G	
NPT	C4SF-W(Z)-D

Semi-standard: 6W

Piping port thread type	(9) Part No.
Rc	C4SF-6W-D
G	
NPT	C4SF-6W(Z)-D

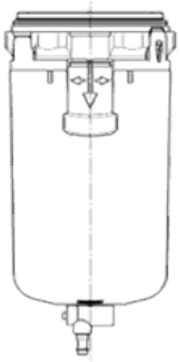

Option symbol	-	-
Semi-standard symbol	2	2J
Appearance and part No.		

Semi-standard: 2

Piping port thread type	(9) Part No.
Rc	C4SF-2-A
G	
NPT	C4SF-2(Z)-A

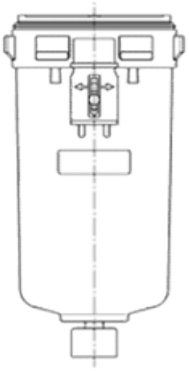

Semi-standard: 2J

Piping port thread type	(9) Part No.
Rc	C4SF-2J-A
G	C4SFF-2J-A
NPT	C4SFN-2J(Z)-A

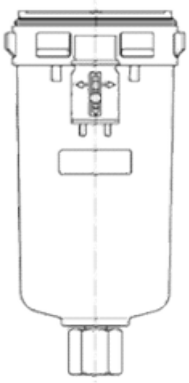

Option symbol	-	-
Semi-standard symbol	**8**	**8J**
Appearance and part No.	Semi-standard: 8 Piping port thread type / (9) Part No. Rc: C4LF-8-A G: C4LF-8-A NPT: C4LF-8(Z)-A 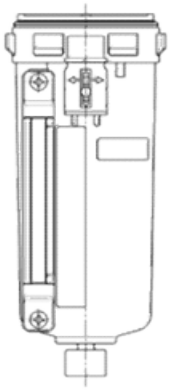	Semi-standard: 8J Piping port thread type / (9) Part No. Rc: C4LF-8J-A G: C4LFF-8J-A NPT: C4LFN-8J(Z)-A 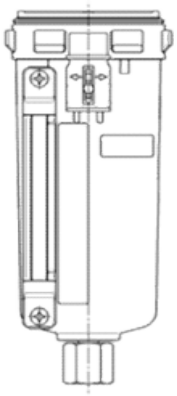

Option symbol	**C** Note 1)		**C** Note 1)
Semi-standard symbol	**-**	**6**	**2**
Appearance and part No.	Semi-standard: — Piping port thread type / (9) Part No. Rc: AD47-D G: AD47-D NPT: AD47N(-Z)-D Semi-standard: 6 Piping port thread type / (9) Part No. Rc: AD47-6-D G: AD47-6-D NPT: AD47N-6(Z)-D 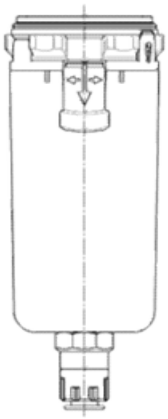		Semi-standard: 2 Piping port thread type / (9) Part No. Rc: AD47-2-A G: AD47-2-A NPT: AD47N-2(Z)-A 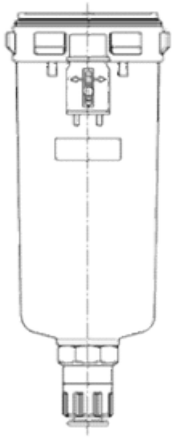

Option symbol	**C** Note 1)
Semi-standard symbol	**8**
Appearance and part No.	Semi-standard : 8 Piping port thread type / (9) Part No. Rc: AD47-8-A G: AD47-8-A NPT: AD47N-8(Z)-A 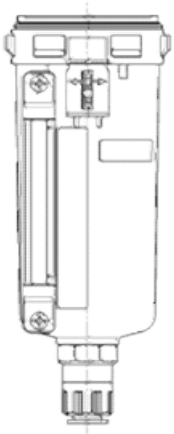

Note 1) Minimum operating pressure is 0.15 MPa.

Note 2) Part No. (9) includes Bowl seal (8). Refer to section [12. Disassembly Drawing].

Note 3) "Z" in Part No. (9) indicates semi-standard specifications. The pressure unit: psi. The temperature unit: °F.

Note 4) Refer to section [4. How to Order] for option and semi-standard symbols.

Option symbol	D Note 1)		D Note 1)
Semi-standard symbol	-	6	2
Appearance and part No.	Semi-standard: — Piping port thread type / (9) Part No. Rc / AD48-D G NPT / AD48N(-Z)-D Semi-standard: 6 Piping port thread type / (9) Part No. Rc / AD48-6-D G NPT / AD48N-6(Z)-D 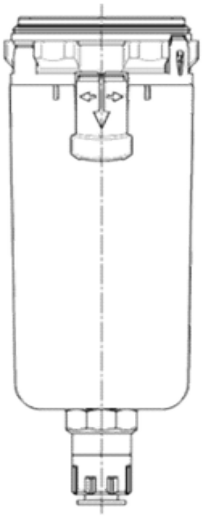		Semi-standard: 2 Piping port thread type / (9) Part No. Rc / AD48-2-A G NPT / AD48N-2(Z)-A 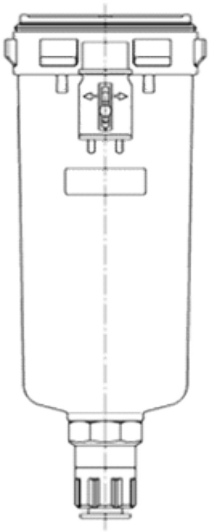

Option symbol	D Note 1)
Semi-standard symbol	8
Appearance and part No.	Semi-standard: 8 Piping port thread type / (9) Part No. Rc / AD48-8-A G NPT / AD48N-8(Z)-A 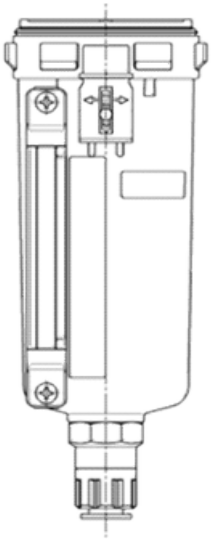

Note 1) Minimum operating pressure is 0.1 MPa.
Note 2) Part No. (9) includes Bowl seal (8). Refer to section [12. Disassembly Drawing].
Note 3) "Z" in Part No. (9) indicates semi-standard specifications. The pressure unit: psi. The temperature unit: °F.
Note 4) Refer to section [4. How to Order] for option and semi-standard symbols.

8. Assembly of Optional Parts

8-1. AW20-D/ AW30-D/ AW40-D Bracket (Panel mount)

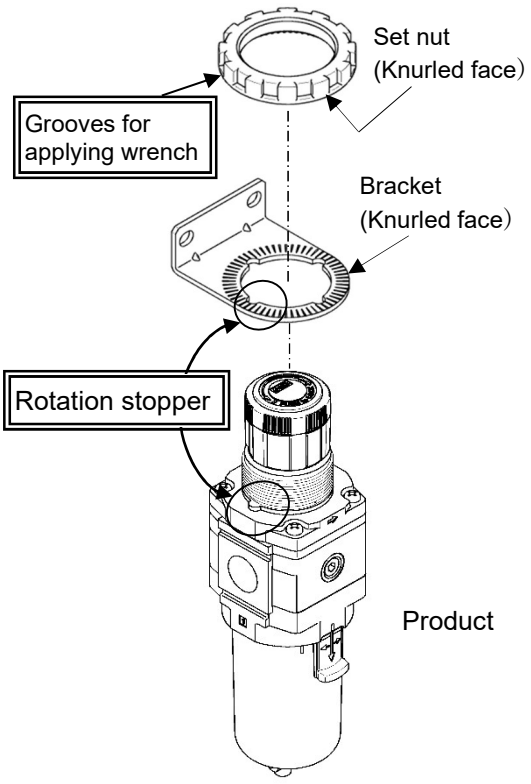

1) Bracket mounting
Mount the bracket to the filter regulator as shown in the picture. Assemble so that the rotation stopper of the filter regulator and the bracket are engaged properly.

2) Secure with the set nut
Ensure that the knurled faces of the bracket and the set nut are facing each other.

3) Tightening
Turn the set nut while the filter regulator is aligned correctly with the bracket. The knurling of the bracket and set nut stops loosening of the screw. Usually, these can be tightened adequately by hand. (Extra tightening is recommended for panel mounting).

* When retightening
Please use a hook wrench on the grooves of the set nut. After hand tightening, follow the values in the table below for retightening.

Model	Tool size	Amount of retightening	Reference torque
AW20-D	34/38	2 to 5 notch	2.0+/-0.2 N･m
AW30-D	52/55		3.5+/-0.3 N･m
AW40-D	52/55		4.0+/-0.4 N･m

8-2. AW60-D Bracket

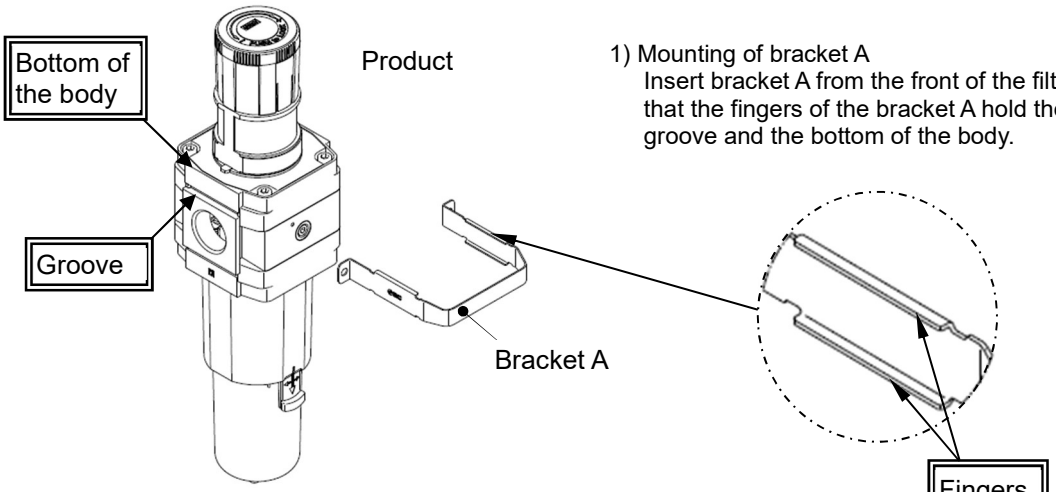

1) Mounting of bracket A
Insert bracket A from the front of the filter regulator so that the fingers of the bracket A hold the regulator at the groove and the bottom of the body.

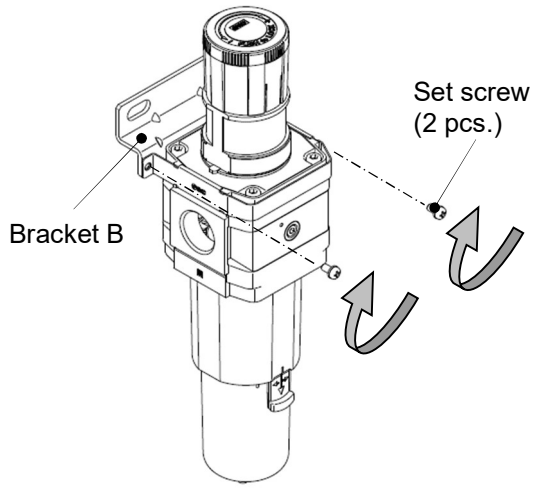

2) Mounting of bracket B
Fix the bracket B with the set screw (2 pcs.) included in the package. Refer to the table below for the tightening torque.

Model	Tool	Reference torque
AW60-D	Phillips screwdriver	1.5+/-0.2 N･m

8-3. Pressure gauge (round type)

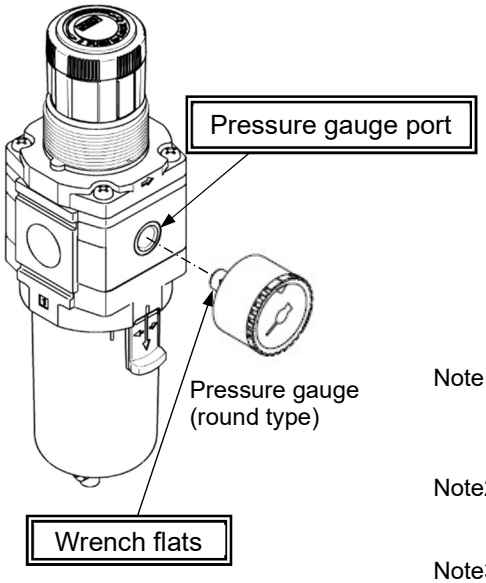

1) Pressure gauge mounting (round type)
Before mounting the pressure gauge onto the pressure gauge port of the filter regulator, confirm that sealing material has been applied to the pressure gauge.
Please refer to "Safety Instructions / Piping" when using sealing tape.

Wrench size

Model	Tool size
AW20-D	14
AW30-D	
AW40-D	
AW60-D	

Note1) Positioning of pressure gauge
Adjust the pressure gauge position by tightening it.
Adjustment in loosening direction may cause air leakage.

Note2) No plug is mounted onto the pressure gauge port of product with a round type pressure gauge.

Note3) Torque control
Please use the value in the torque table described in "Safety Instructions / Piping" when controlling the tightening torque.

9. Operation and Adjustment

9-1. Pressure regulation

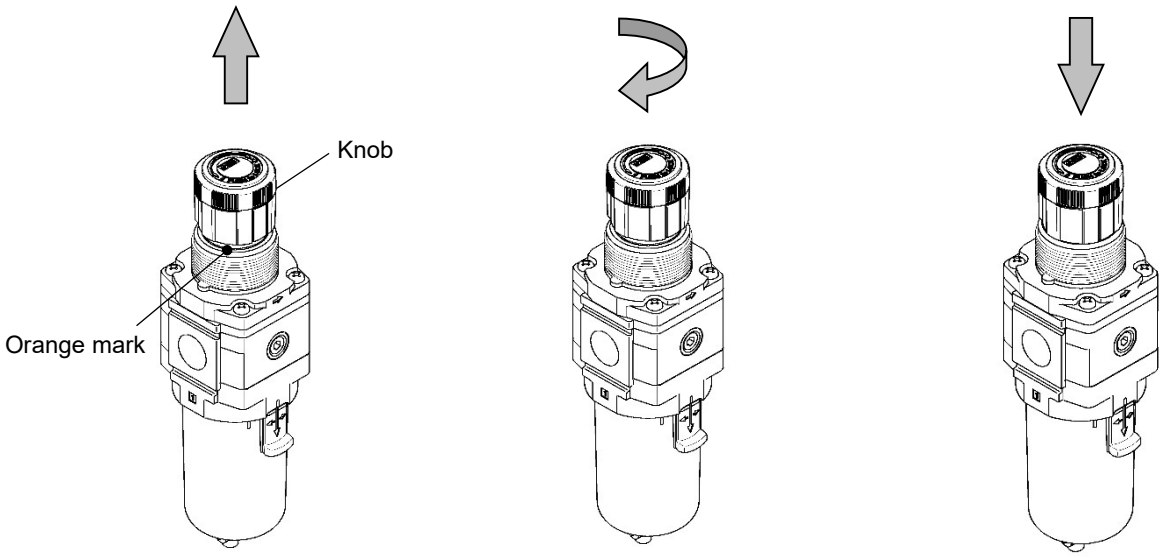

(1) Pull the knob in the arrow direction for unlocking, revealing an orange mark.

(2) Turning the knob clockwise increases the outlet pressure. When the knob of the relief type is rotated counterclockwise, pressure decreases.
Note) Adjust the pressure in pressure increasing direction (rotate in the arrow direction). Otherwise, it may cause insufficient set pressure.

(3) After adjusting pressure, lock the knob by pushing it in the arrow direction.

9-2. Indicator adjustment of the square embedded type pressure gauge

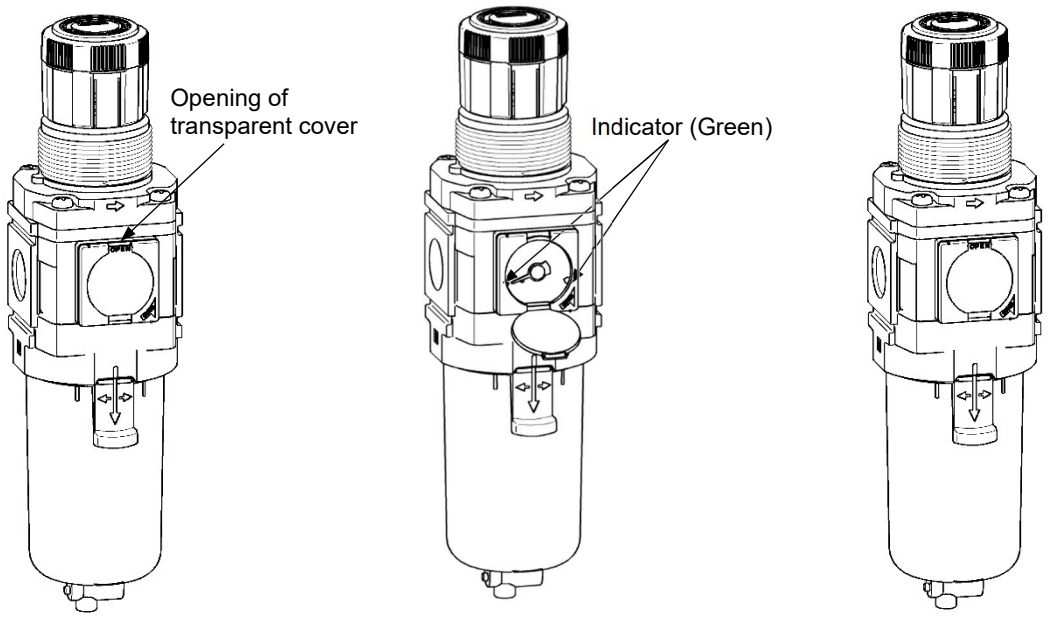

(1) Pull the opening of the transparent cover to unlock.

(2) Open the transparent cover as in the drawing and adjust the indicator to the upper and lower limit positions to be controlled.

(3) Close the transparent cover after adjusting the indicator.

9-3. Discharge from the product with drain cock

-Pressurize the inside of the filter regulator when discharging drain. Drain will not be discharged properly if not pressurized.

-Drain discharge mechanism is different depending on the bowl assembly. Check the bowl assembly and discharge the drain following the method below.
-Rotation type: After discharging the drain, tighten the drain cock to the opposite direction by hand until the seal inside seals correctly. Use of a tool can damage the product.

AW20-D: Drain cock (rotation type)
(Polycarbonate bowl/ Nylon bowl)

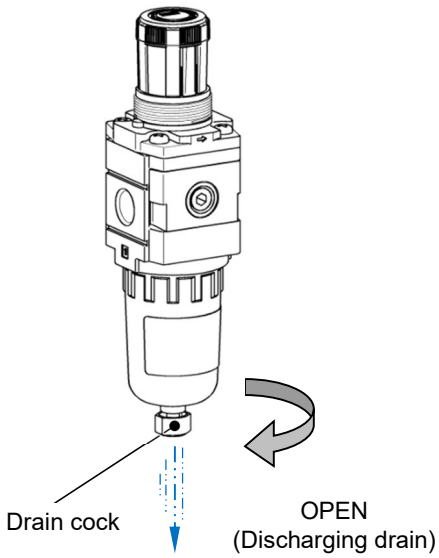

AW30-D/ AW40-D/ AW60-D: Drain cock/ With barb fitting (push type)
(Polycarbonate bowl/ Nylon bowl)

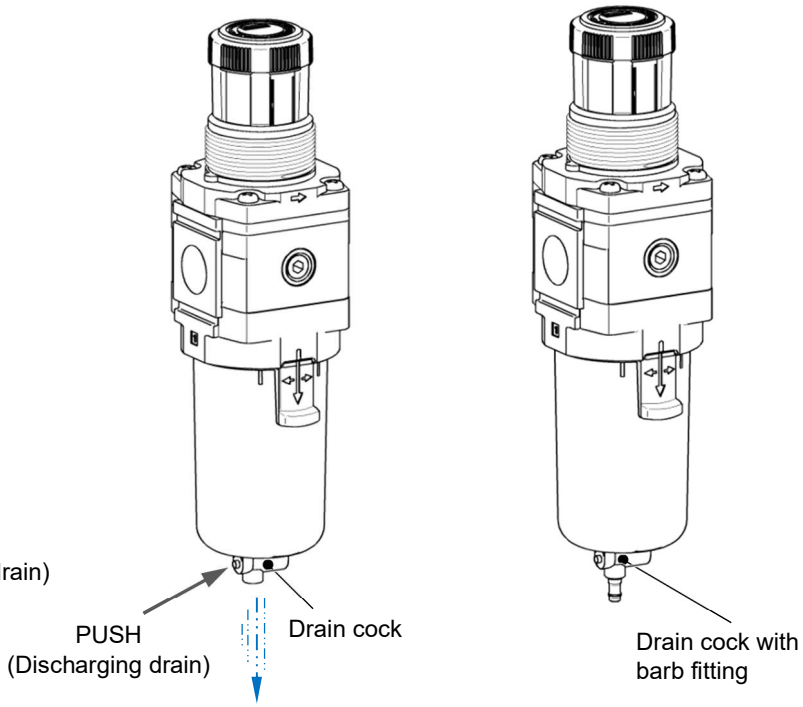

AW20-D: Drain cock (push type)
(Metal bowl)

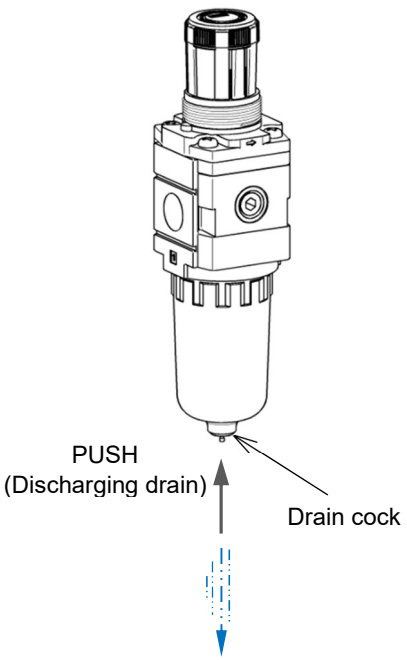

AW30-D/ AW40-D/ AW60-D: Drain cock (rotation type)
(Metal bowl/ Metal bowl with level gauge)

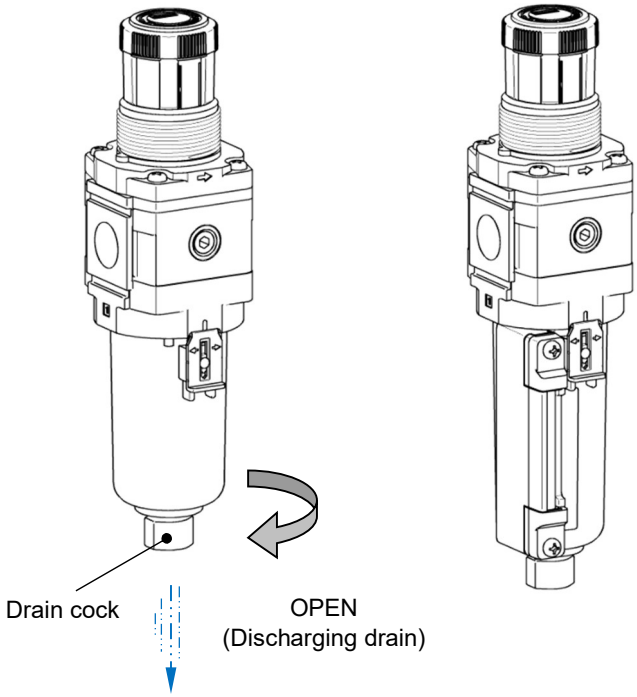

9-4. Manual drain discharge from the auto drain

-Pressurize the inside of the filter regulator when discharging drain. Drain will not be discharged properly if not pressurized.

-To discharge the auto drain manually, follow the procedure below. After discharging the drain, rotate the cock to the opposite direction by hand to close the drain valve. Use of a tool can damage the product.

AW20-D: Auto drain

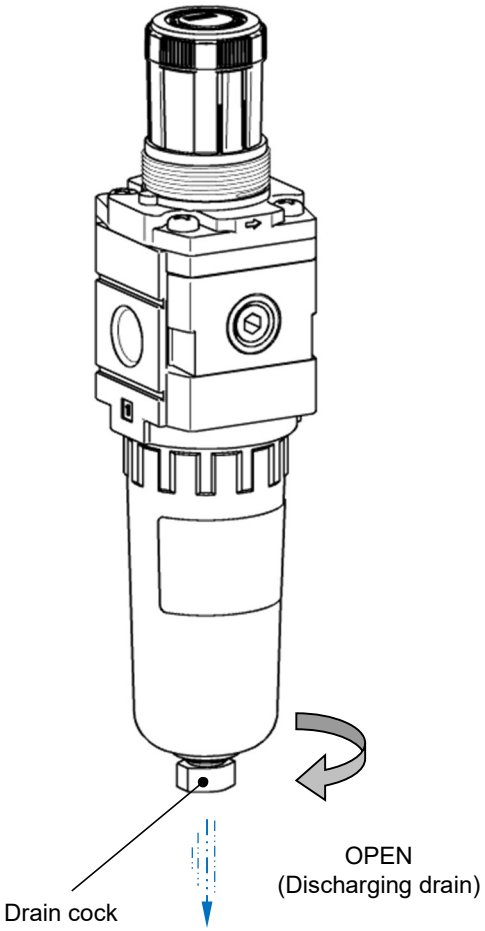

AW30-D/ AW40-D/ AW60-D: Auto drain

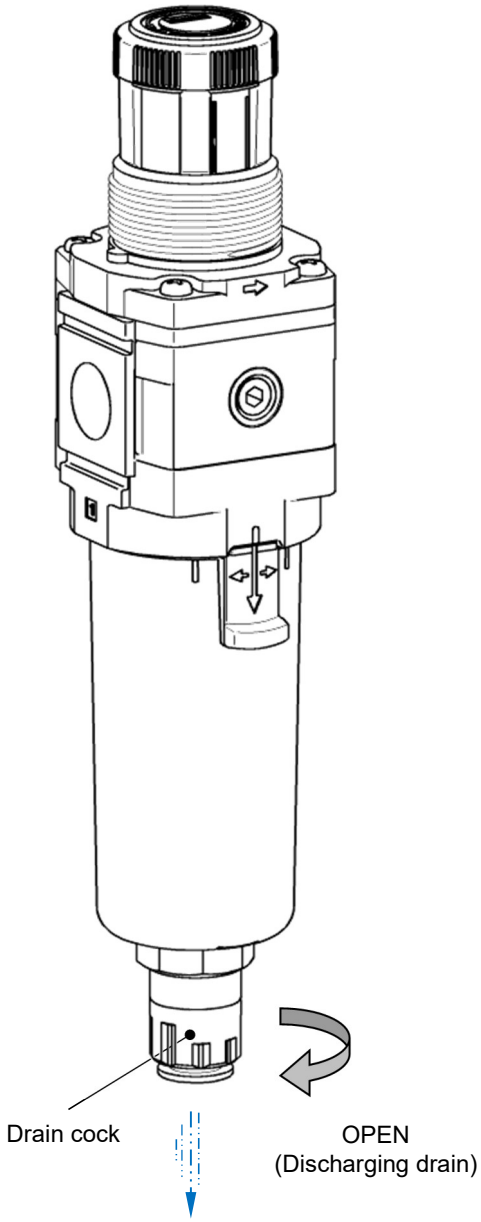

10. Trouble Shooting

Refer to sections [11. How to Replace the Components] and [12. Disassembly Drawing].

Trouble		Possible cause	Countermeasure	Page for reference
Category	Failure			
Flow rate	As pressure drop is large, fluid does not flow.	1. Clog of the element.	Replace the element.	P35
Pressure	The pressure can not be adjusted.	1. Air pressure is not supplied to the inlet.	Check the supply pressure. Ensure that the supply side ball valve is opened.	-
		2. The product is installed opposite to the flow direction.	Install the product correctly after confirming the direction of flow. "1" indicates the IN and "2" indicates the OUT.	P6
		3. Pressure regulating spring is damaged.	Replace the pressure regulating spring.	P31
		4. Valve spring is damaged.	Replace the valve spring.	P36-38
		5. Foreign materials caught in the rubber seat of the valve or the O-ring on the valve sliding part.	Replace the valve assembly.	P36-38
		6. Seating part of the valve is damaged.	Replace the valve assembly.	P36-38
		7. Foreign materials caught in the seating part of the check valve.	Replace the check valve assembly.	P36-38
	The set pressure does not become zero even when the knob is loosened.	1. Foreign materials caught in the seating part or O-ring of the valve.	Remove the valve assembly and eliminate foreign materials. When the condition is not improved, replace the valve assembly.	P36-38
		2. Rubber seat of the valve is damaged.	Replace the valve assembly.	P36-38
		3. Valve spring is damaged.	Replace the valve spring.	P36-38
		4. The valve is fixed in an open position.	Clean the valve sliding surface of O-ring and apply grease additionally.	P36-38
Air leakage	Air leakage from the bonnet exhaust port.	1. The product is installed opposite to the flow direction.	Install the product correctly after confirming the direction of flow.	P6
		2. Diaphragm is damaged.	Replace the diaphragm assembly.	P31
		3. Foreign materials caught in seating part of the exhaust valve.	Clean the seating part of the relief valve or replace the diaphragm assembly.	P31
		4. Foreign materials caught in the seating part or O-ring of the valve.	Remove the valve guide to clean the valve, valve seating part and valve O-ring. And then, apply grease to the O-ring and sliding part of the valve.	P36-38
		5. Rubber seat of the valve assembly is damaged.	Replace the valve assembly.	P36-38
		6. Foreign materials caught in the seating part of the check valve.	Replace the check valve assembly.	P41
		7. Back pressure exceeding the set pressure is applied to the downstream.	Revise the air circuit so that back pressure does not exceed the set pressure.	-

Trouble		Possible cause	Countermeasure	Page for reference
Category	Failure			
Air leakage	Air leakage from between the bonnet and the body.	1. Loosened bonnet screws.	Fasten the bonnet.	P31
		2. Diaphragm is damaged.	Replace the diaphragm assembly.	P31
	Air leakage from between the body and the bowl.	1. Bowl seal is damaged.	Replace the bowl seal. Grease up before replacing the bowl seal. Note)	P32-34
	Air leakage from the bowl.	1. Bowl is damaged.	Replace the bowl assembly. (If the solvent is considered to be harmful, replacement to the metal bowl is recommended.)	P32-34
	Air leakage from the drain cock.	1. Foreign matter caught in the valve of the drain cock.	Open the drain cock for a few seconds for blowing.	P27-28
		2. Seating part of the drain cock is damaged.	Replace the bowl assembly.	P32-34
	Drain or air continues blowing out from the drain discharge of the float type auto drain.	1. Low supply pressure	Confirm the minimum operating pressure of the auto drain.	P6 P16-23
		2. The product is not mounted correctly.	Install the drain exhaust so that it will face vertically downward.	P6
		3. Foreign matter is caught in the main valve of the auto drain.	Eliminate the dirt by manual discharge.	P27-28
		4. Main valve of the auto drain is broken.	Replace the bowl assembly.	P32-34
		5. Drain piping is long, or I.D. of the piping is small. (Back pressure is applied.)	Be sure to connect the appropriate piping for drain.	P7
		6. Drain discharging part and bowl seat are damaged.	Replace the bowl assembly.	P32-34
Backward flow	Air does not flow backwards.	1. Product without backflow function is used.	Check the product number if backflow function is equipped.	P10-11
		2. Foreign materials caught in the sliding part of check valve, leading to malfunction; or the check valve is fixed in a closed position.	Replace the check valve assembly.	P41
Operability	Drain is not discharging when the drain cock opens.	1. Blockage of outlet of the drain cock due to solid foreign matter etc.	Replace the bowl assembly.	P32-34
	Too much drain comes from the piping on outlet side.	1. Drain level reaches the baffle.	Open the drain cock for discharging and replace the element.	P27-28 P35

Note) Grease pack for maintenance "GR-F-***" is recommended for use. (See table 1, table 2)

Table 1 Coating amount per unit

Model	Mass(g)
AW20-D	0.3
AW30-D	0.45
AW40-D	0.6
AW60-D	0.85

Table 2 Grease pack Number

Model	Mass(g)
GR-F-005	5
GR-F-050	50
GR-F-100	100
GR-F-200	200
GR-F-500	500

11. How to Replace the Components

⚠ Warning

Before replacement, make sure that no pressure remains in the equipment.
Also, make sure to loosen the knob of the filter regulator so that the set pressure is zero.
After replacement, confirm that the product satisfies specific functions and no external leakage occurs before operating it.

11-1. Diaphragm Assembly Replacement

Applicable model	Work category	Procedure	Tool	Criteria
AW20-D AW30-D AW40-D AW60-D	Disassembly	1) Loosen the knob completely before disassembly.	-	-
		2) Remove the 4 screws and remove the bonnet.	AW20-D/ AW30-D/ AW40-D Phillips screwdriver AW60-D Hexagon wrench Nominal size: 5	-
		3) Remove the pressure regulating screw assembly, pressure regulating spring, and diaphragm assembly in that order.	–	-
	Assembly	4) Assemble the diaphragm assembly, pressure regulating spring, and then pressure regulating screw assembly.	-	Direction of diaphragm assembly and pressure regulating screw assembly
		5) Assemble the bonnet to the body. While the convex side of the bonnet is facing the IN side, mount it onto the body. Then tighten the 4 mounting screws temporarily before tightening them diagonally and evenly to fix the bonnet.	AW20-D/ AW30-D/ AW40-D Phillips screwdriver AW60-D Hexagon wrench Nominal size: 5	Tightening torque: AW20-D, AW30-D: 2.35+/- 0.3 N·m AW40-D, AW60-D: 3.5+/- 0.3 N·m

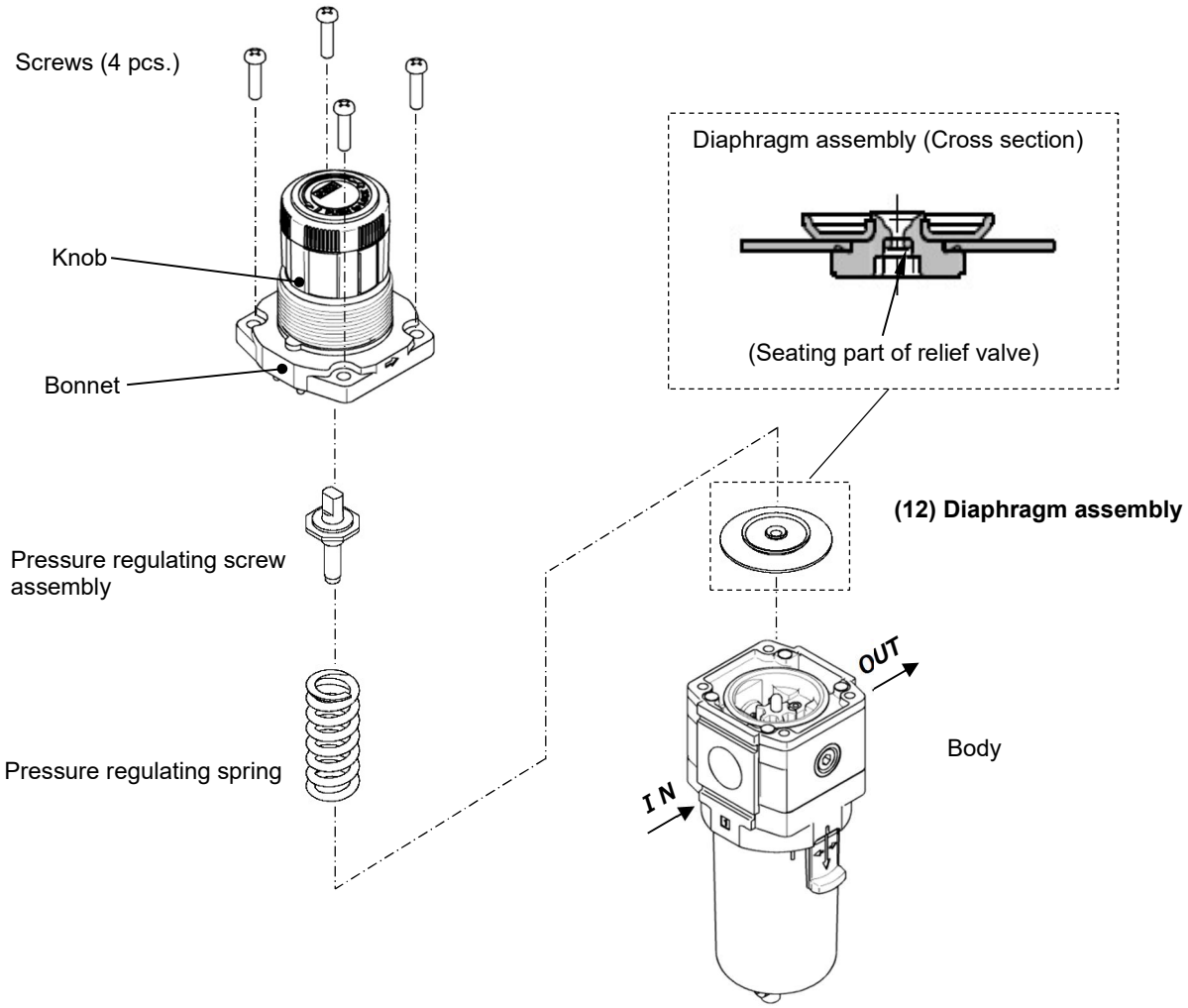

11-2. Bowl Assembly Replacement

Applicable Model	Work category	Procedure	Tool	Criteria
AW20-D AW20K-D	Disassembly	1) Remove the bowl assembly from the product. If the bowl assembly is tightened too much to be removed, use a hook spanner until it can be loosened by hand.	Spanner specified for SMC Product No.: 1129129	–

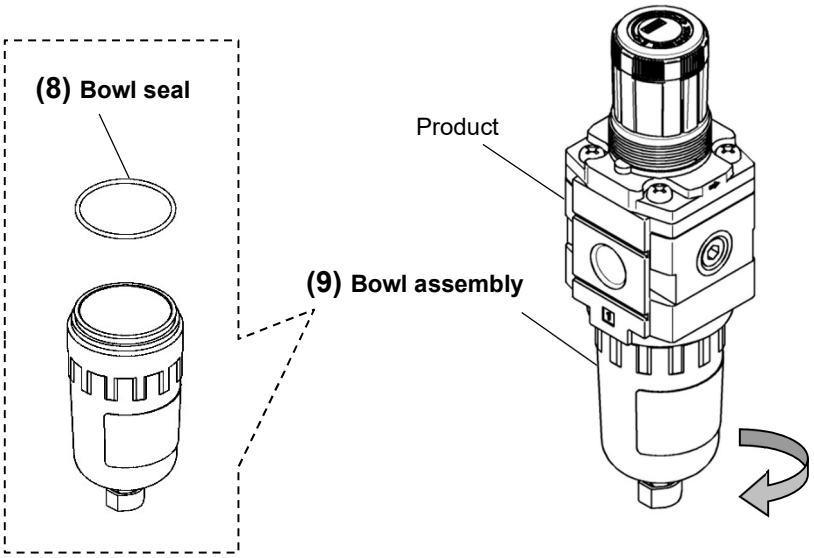

Work category	Procedure	Tool	Criteria
Assembly	2) Screw the bowl assembly into the product. Tighten it referring to the specified torque.	–	Reference tightening torque: 2.1 N・m

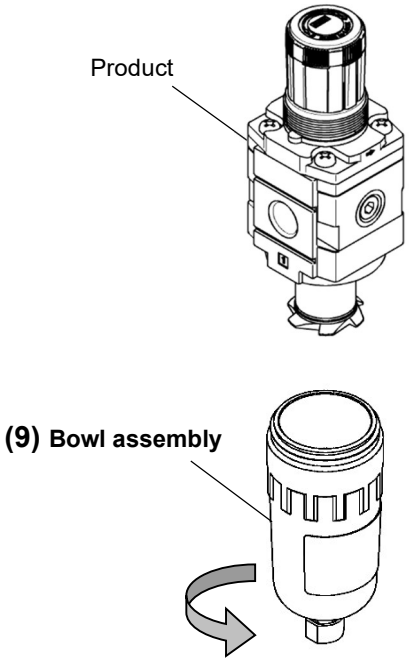

Applicable model	Work category	Procedure	Tool	Criteria
AW30-D AW30K-D AW40-D AW40K-D	Disassembly	1) Remove the bowl assembly from the product. While the lock button is held down, rotate the bowl assembly by approx. 30 degrees so that the mating marks of the body and bowl assembly meet each other. Then remove the bowl assembly by pulling it downward.	–	–

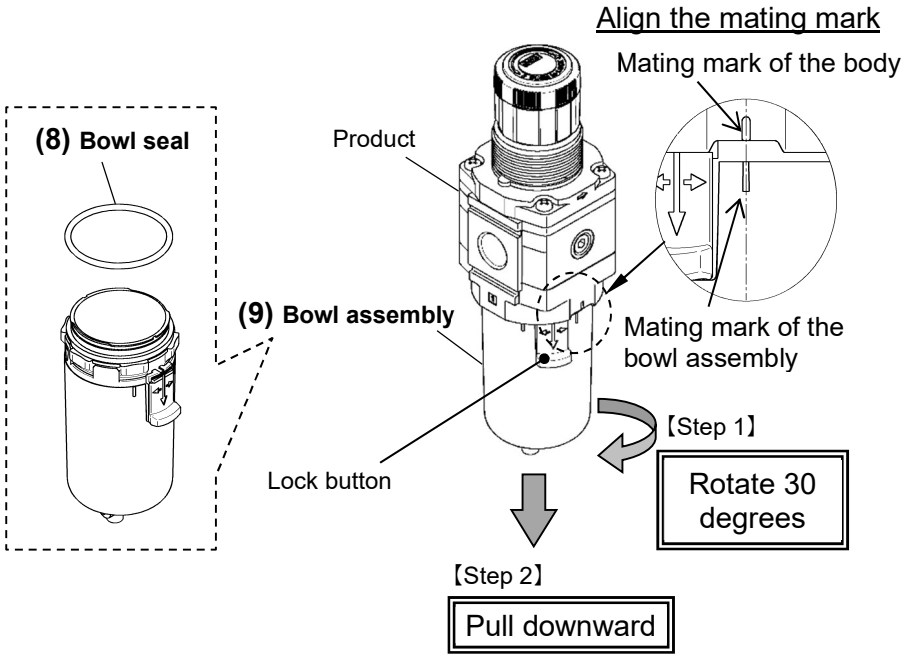

Work category	Procedure	Tool	Criteria
Assembly	2) Mount the bowl assembly to the product and rotate the bowl assembly until the lock button is locked in position as shown in the figure below.	–	–

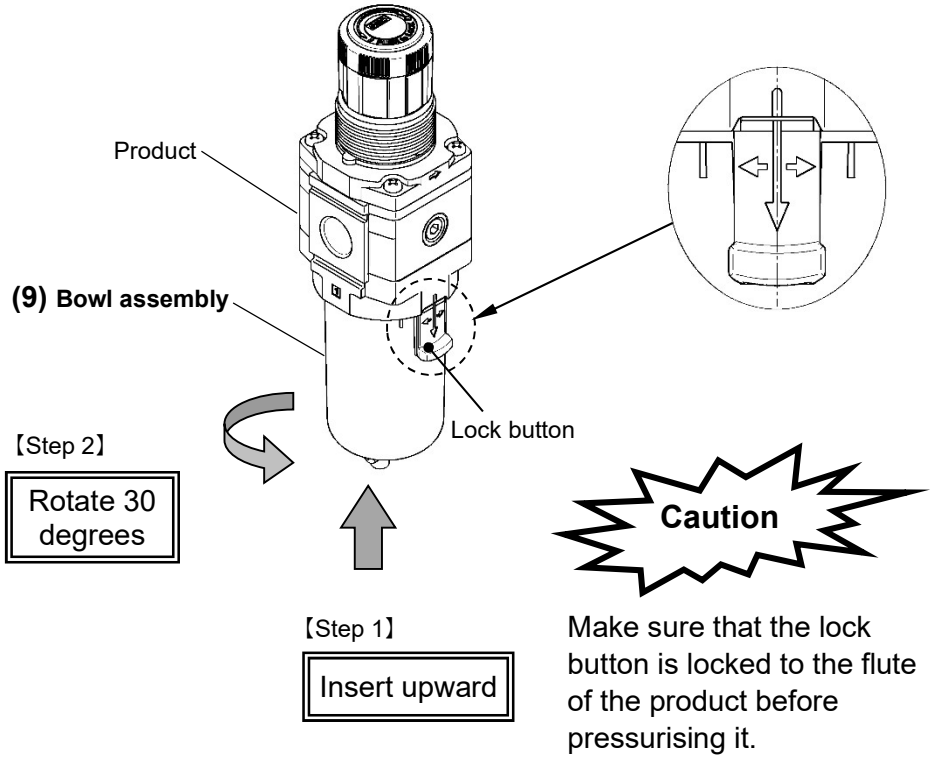

Applicable model	Work category	Procedure	Tool	Criteria
AW60-D AW60K-D	Disassembly	1) Remove the bowl assembly from the product. While the lock button is held down, rotate the bowl assembly by approx. 30 degrees so that the mating marks of the body and bowl assembly meet each other. Then remove the bowl assembly by pulling it downward.	–	–

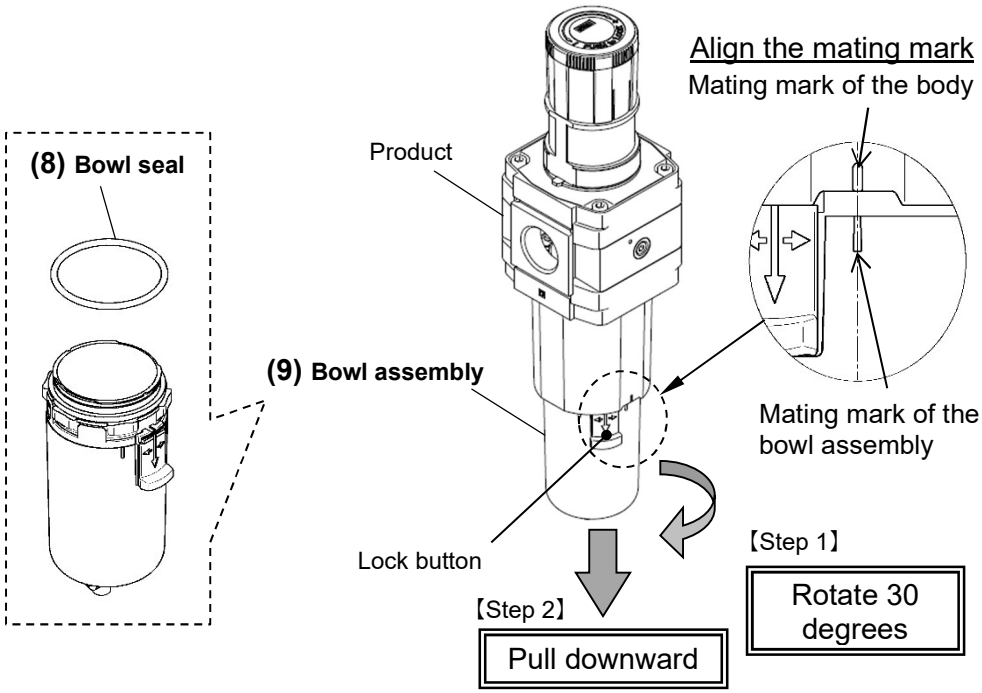

Work category	Procedure	Tool	Criteria
Assembly	2) Mount the bowl assembly to the product and rotate the bowl assembly until the lock button is locked in position as shown in the figure below.	–	–

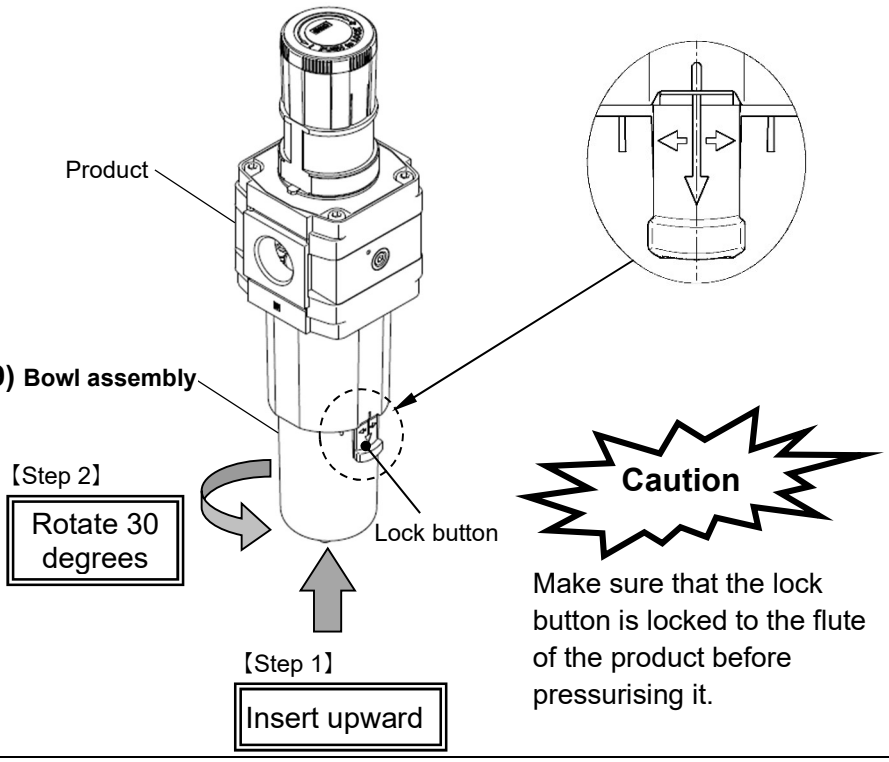

11-3. Element Assembly Replacement

Applicable model	Work category	Procedure	Tool	Criteria
AW20-D AW20K-D AW30-D AW30K-D AW40-D AW40K-D AW60-D AW60K-D	Disassembly	1) Remove the bowl assembly referring to section [11-2. Bowl Assembly Replacement]. Rotate the baffle in the arrow direction to remove the element.	–	–
		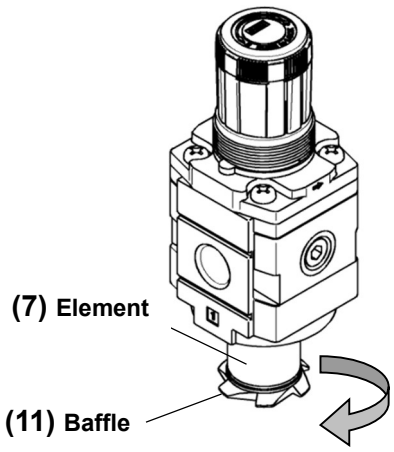		
	Work category	Procedure	Tool	Criteria
	Assembly	2) Mount the element to the valve guide and rotate the baffle in the arrow direction to mount the element. Assemble the bowl assembly referring to section [11-2. Bowl Assembly Replacement].	-	-
		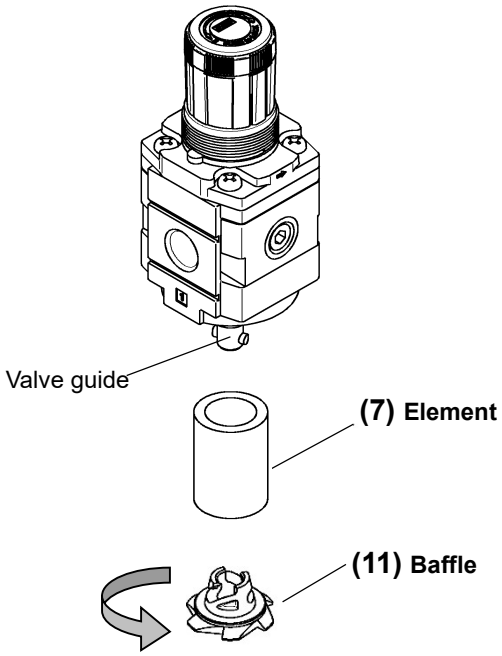		

11-4. Valve Assembly Replacement

Applicable model	Work category	Procedure	Tool	Criteria
AW20-D AW20K-D AW30-D AW30K-D AW40-D AW40K-D	Disassembly	1) Remove the bowl assembly and element referring to sections [11-2. Bowl Assembly Replacement] and [11-3. Element Assembly Replacement]. Rotate the valve guide in the arrow direction to remove, taking care not to lose the valve spring.	Hexagon wrench AW20-D: Nominal size: 4 AW30-D: Nominal size: 6 AW40-D: Nominal size: 8	-

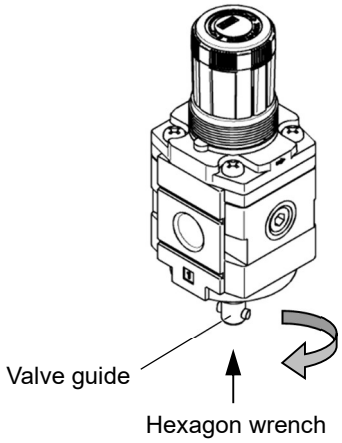

Work category	Procedure	Tool	Criteria
Assembly	2) Mount the valve spring and valve assembly on the valve guide as shown in the drawing. Rotate the valve guide in the arrow direction to mount the valve guide to the product. Assemble the element and the bowl assembly referring to sections [11-3. Element Assembly Replacement] and [11-2. Bowl Assembly Replacement].	Hexagon wrench AW20-D: Nominal size: 4 AW30-D: Nominal size: 6 AW40-D: Nominal size: 8	Tightening torque AW20-D: 0.45 N·m AW30-D: 0.95 N·m AW40-D: 1.15 N·m

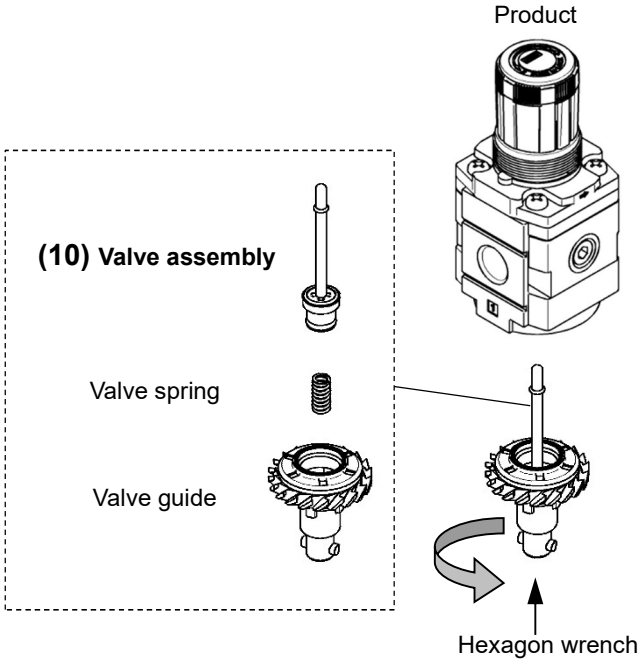

Applicable model	Work category	Procedure	Tool	Criteria
AW60-D AW60K-D	Disassembly	1) Remove the bowl assembly and element referring to sections [11-2. Bowl Assembly Replacement] and [11-3. Element Assembly Replacement]. Remove 4 screws and remove the housing and O-ring.	Hexagon wrench Nominal size: 5	-

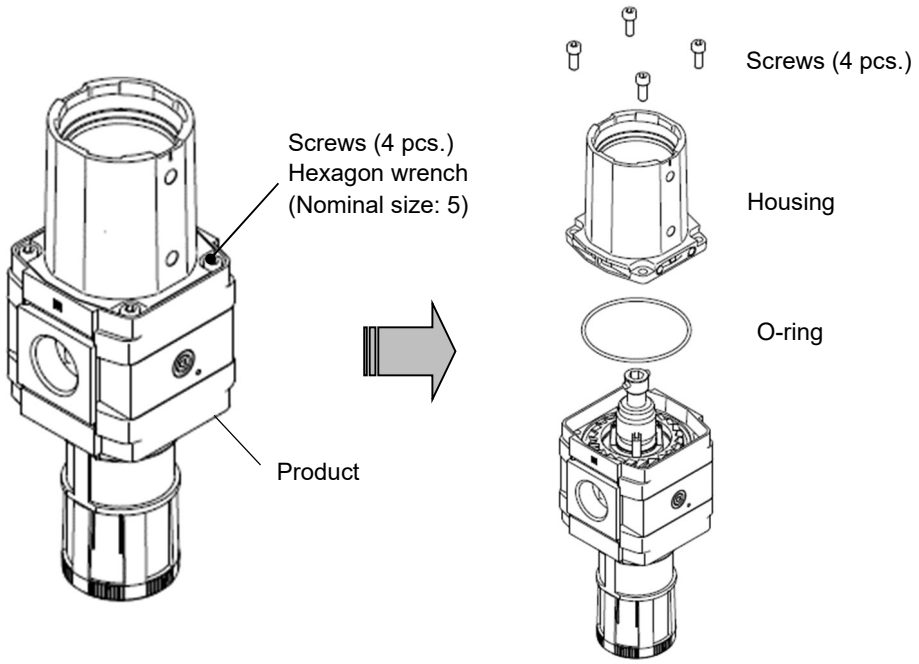

Work category	Procedure	Tool	Criteria
Disassembly	2) Rotate the valve guide in the arrow direction to remove, taking care not to lose the valve spring.	Hexagon wrench Nominal size: 10	-

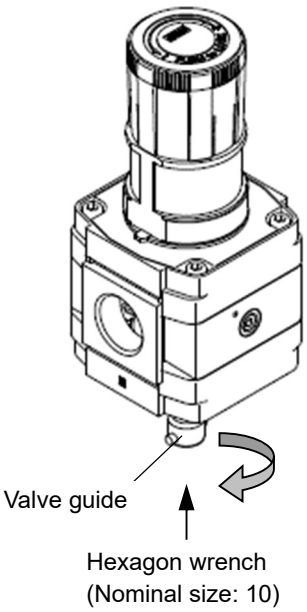

Applicable model	Work category	Procedure	Tool	Criteria
AW60-D AW60K-D	Assembly	3) Mount the valve spring and valve assembly on the valve guide as shown in the drawing. Rotate the valve guide in the arrow direction to mount the valve guide to the product.	Hexagon wrench Nominal size: 10	Tightening torque: 6.5+/- 0.3 N・m

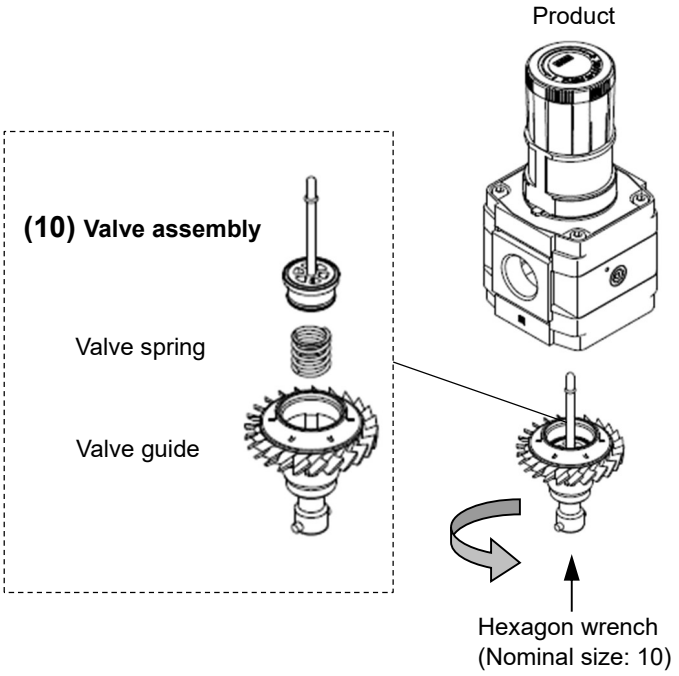

Work category	Procedure	Tool	Criteria
Assembly	4) Mount the O-ring and housing to the body. Assemble them with 4 screws. Then, assemble the element and the bowl assembly referring to section [11-3. Element Assembly Replacement] and [11-2. Bowl Assembly Replacement].	Hexagon wrench Nominal size: 5	Tightening torque: 3.5+/- 0.3 N・m

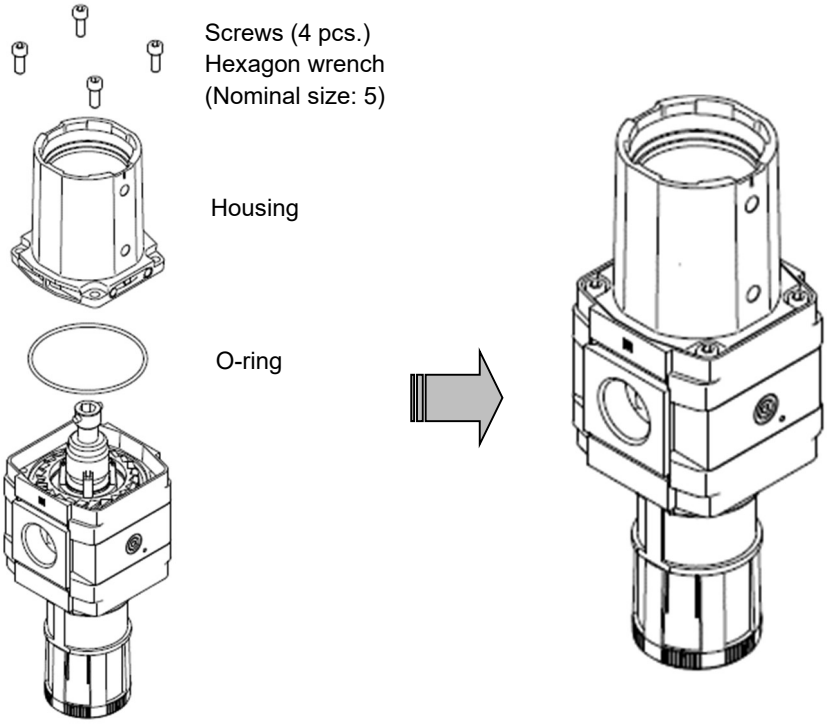

11-5. Square Embedded Type Pressure Gauge Replacement

Applicable model	Work category	Procedure	Tool	Criteria
AW20-D AW20K-D AW30-D AW30K-D AW40-D AW40K-D AW60-D AW60K-D	Disassembly	1) Remove the pressure gauge cover assembly. Rotate the pressure gauge cover assembly 15 degrees in the arrow direction (counterclockwise) and pull it out.	–	–
		2) Remove the pressure gauge. Remove the 2 mounting screws and remove the pressure gauge. The body cover comes out together. Please take care not missing it.	Phillips screwdriver	–
	Assembly	3) Confirm that the O-ring is mounted onto the pressure gauge. When the O-ring comes out or is left on the filter regulator, mount the O-ring to the pressure gauge correctly.	–	Presence of the O-ring
		4) Assemble the pressure gauge. Mount the pressure gauge to the filter regulator with the mounting screws and tighten the screws referring to the tightening torque specified in the right column.	Phillips screwdriver	Tightening torque: 0.85+/- 0.05 N·m
		5) Mount the pressure gauge cover assembly. Set the pressure gauge cover assembly with its arrow on the lower right corner. Mate the 2 fingers of the pressure gauge cover assembly with the 2 finger slits of the pressure gauge, and rotate the pressure gauge cover assembly 15 degrees to the opposite direction of the arrow (clockwise).	–	–

Note) Applicable to the product with square embedded type pressure gauge.

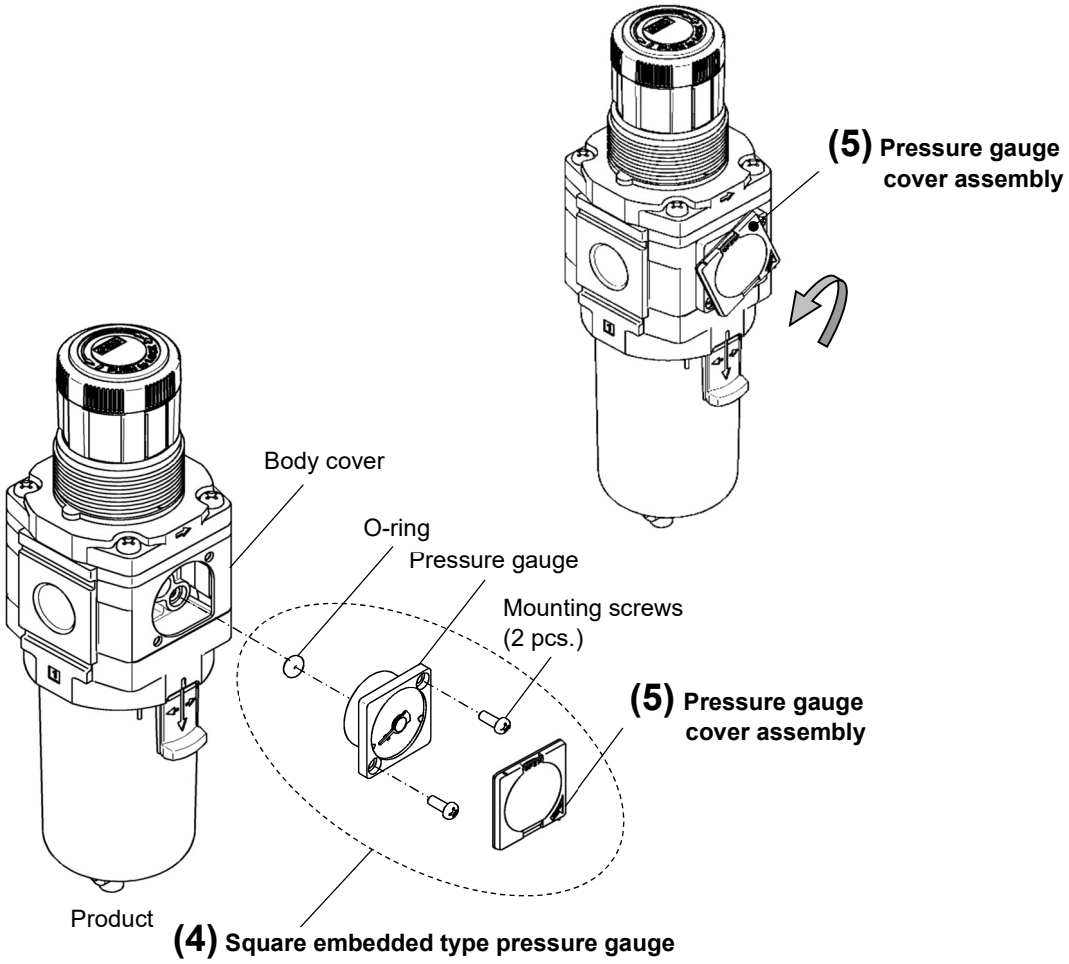

11-6. Blanking Plate Assembly Replacement

Applicable model	Work category	Procedure	Tool	Criteria
AW20-D AW30-D AW40-D AW60-D	Disassembly	1) Remove the blanking plate. Remove the 2 mounting screws and remove the blanking plate. The body cover (AW30-D, AW40-D) comes out together. Please take care not missing it.	Phillips screwdriver	–
	Assembly	2) Confirm that the O-ring is mounted onto the blanking plate. When the O-ring comes out or is left on the filter regulator, mount the O-ring to the blanking plate correctly.	–	Presence of the O-ring
		3) Assemble the blanking plate. Mount the blanking plate to the product, over the body cover, with the mounting screws and tighten them referring to the tightening torque specified in the right column.	Phillips screwdriver	Tightening torque: 0.6+/- 0.05 N·m

Note) Applicable to the product with square embedded type pressure gauge or digital pressure switch.
Not applicable to the product with backflow function.

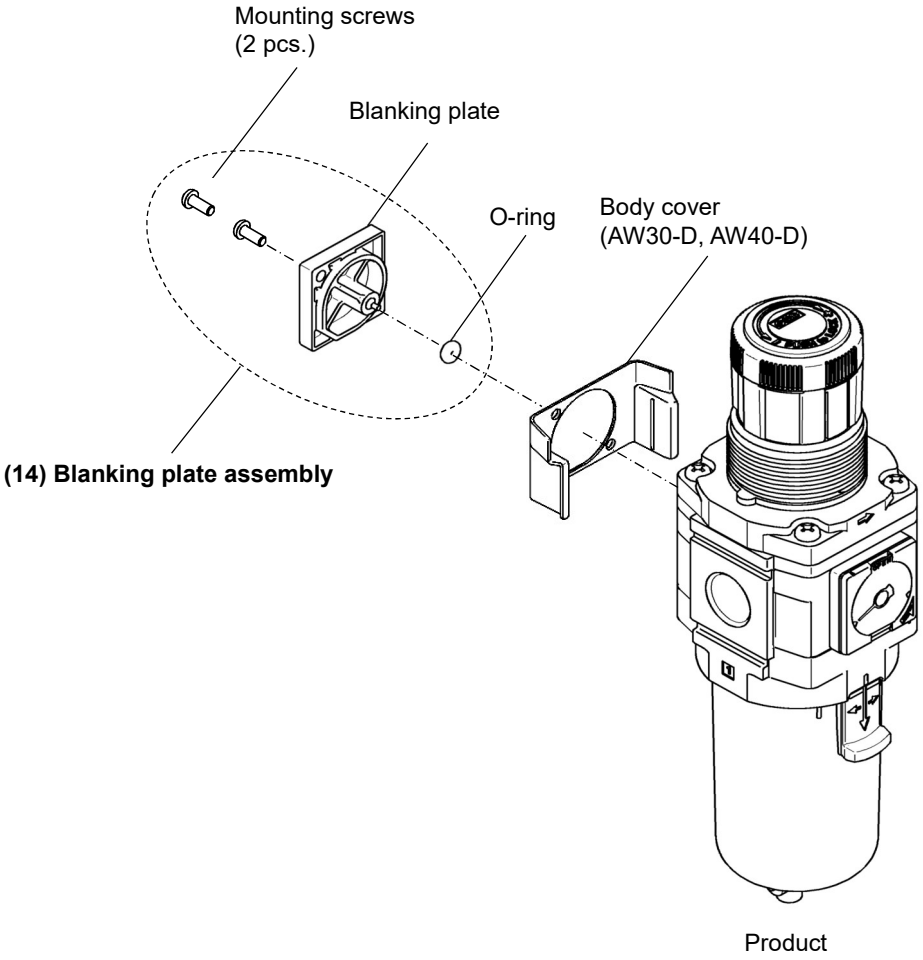

11-7. Check Valve Assembly Replacement

Applicable model	Work category	Procedure	Tool	Criteria
AW20K-D AW30K-D AW40K-D AW60K-D	Disassembly	1) Remove the check valve cover. Remove the 2 mounting screws and the check valve cover. The body cover comes out together. Please take care not missing it.	Phillips screwdriver	–
		2) Remove the check valve assembly. Remove the check valve assembly by pulling it toward the operator.		
	Assembly	3) Confirm that the O-ring is mounted onto the check valve assembly. When the O-ring comes out or is left on the filter regulator, mount the O-ring to the check valve assembly correctly.	–	Presence of the O-ring
		4) Assemble the check valve cover. Assemble the check valve cover to the product with the mounting screws and tighten the screws referring to the tightening torque specified in the right column.	Phillips screwdriver	Tightening torque: 0.6+/- 0.05 N·m

Note) Applicable to the product with backflow function.

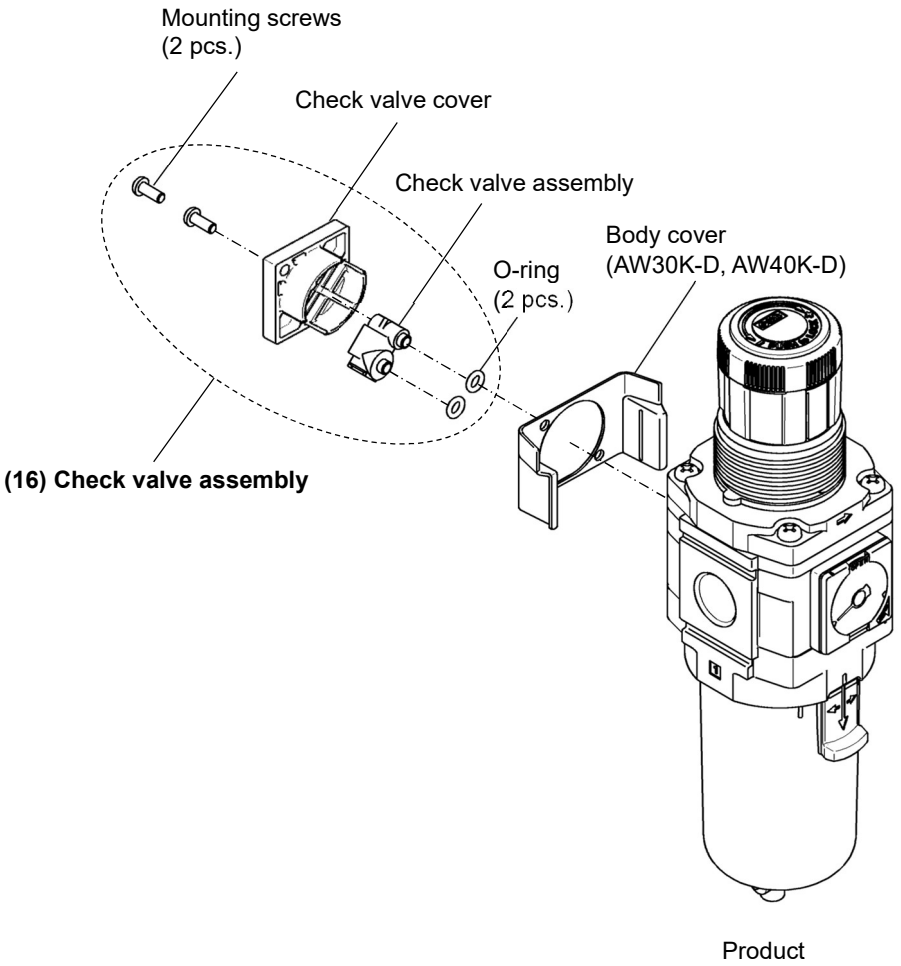

11-8. Plug (with O-ring) Replacement

Applicable model	Work category	Procedure	Tool	Criteria
AW20-D AW20K-D AW30-D AW30K-D AW40-D AW40K-D AW60-D AW60K-D	Disassembly	1) Remove the plug (with O-ring).	Hexagon wrench (Nominal size: 4)	–
	Assembly	2) Mount the plug (with O-ring).	Hexagon wrench (Nominal size: 4)	Tightening torque: 0.6+/- 0.05 N·m

Note) Applicable to the product without pressure gauge.

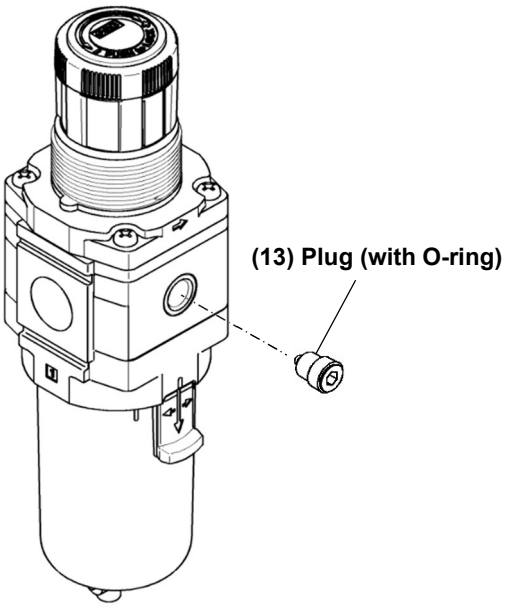

Product
(AW20-D / AW30-D / AW40-D/ AW60-D)

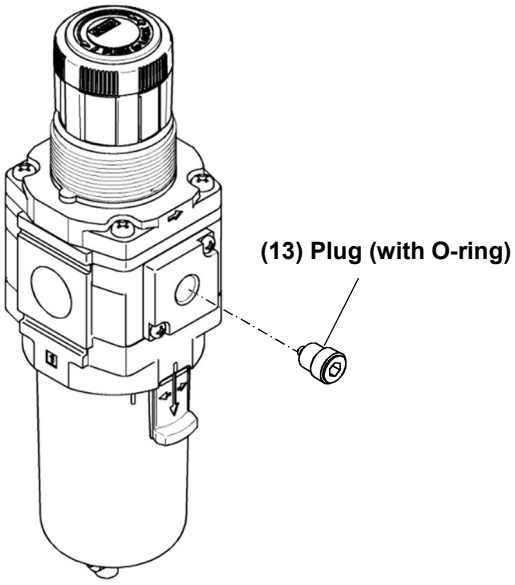

Product
(AW20K-D / AW30K-D / AW40K-D/ AW60K-D)

11-9. Plug Assembly Replacement

Applicable model	Work category	Procedure	Tool	Criteria
AW20K-D AW30K-D AW40K-D AW60K-D	Disassembly	1) Remove the plug assembly. Remove the 2 mounting screws and remove the plug assembly. The body cover comes out together. Please take care not missing it.	Phillips screwdriver	–
	Assembly	2) Confirm that the O-ring is mounted onto the plug assembly. When the O-ring comes out or is left on the filter regulator, mount the O-ring to the plug assembly correctly.	—	Presence of the O-ring
		3) Assemble the plug assembly. Assemble the plug assembly to the product with the mounting screws and tighten the screws referring to the tightening torque specified in the right column.	Phillips screwdriver	Tightening torque: 0.6+/- 0.05 N·m

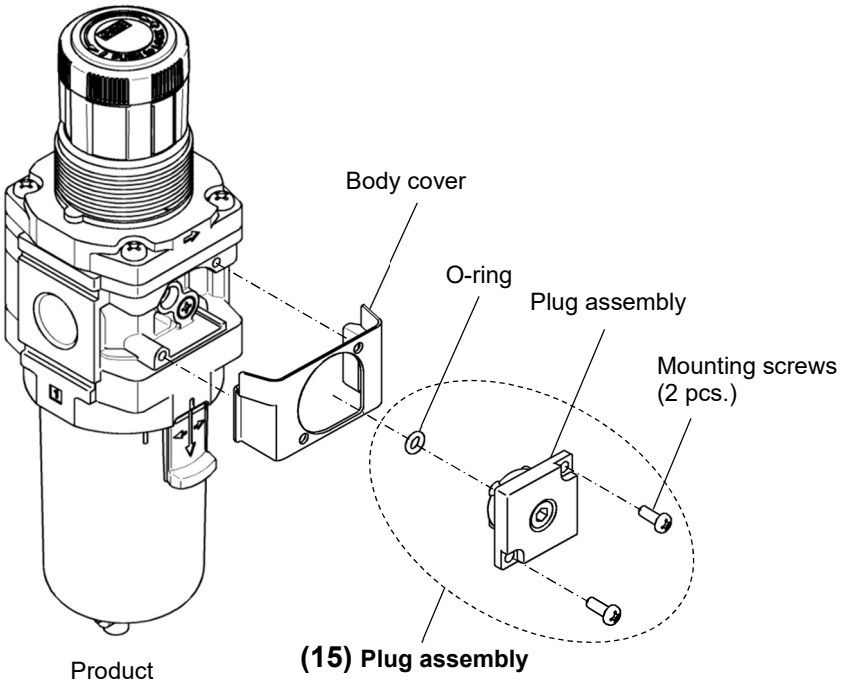

12. Disassembly Drawing

12-1. AW20-D / AW30-D / AW40-D

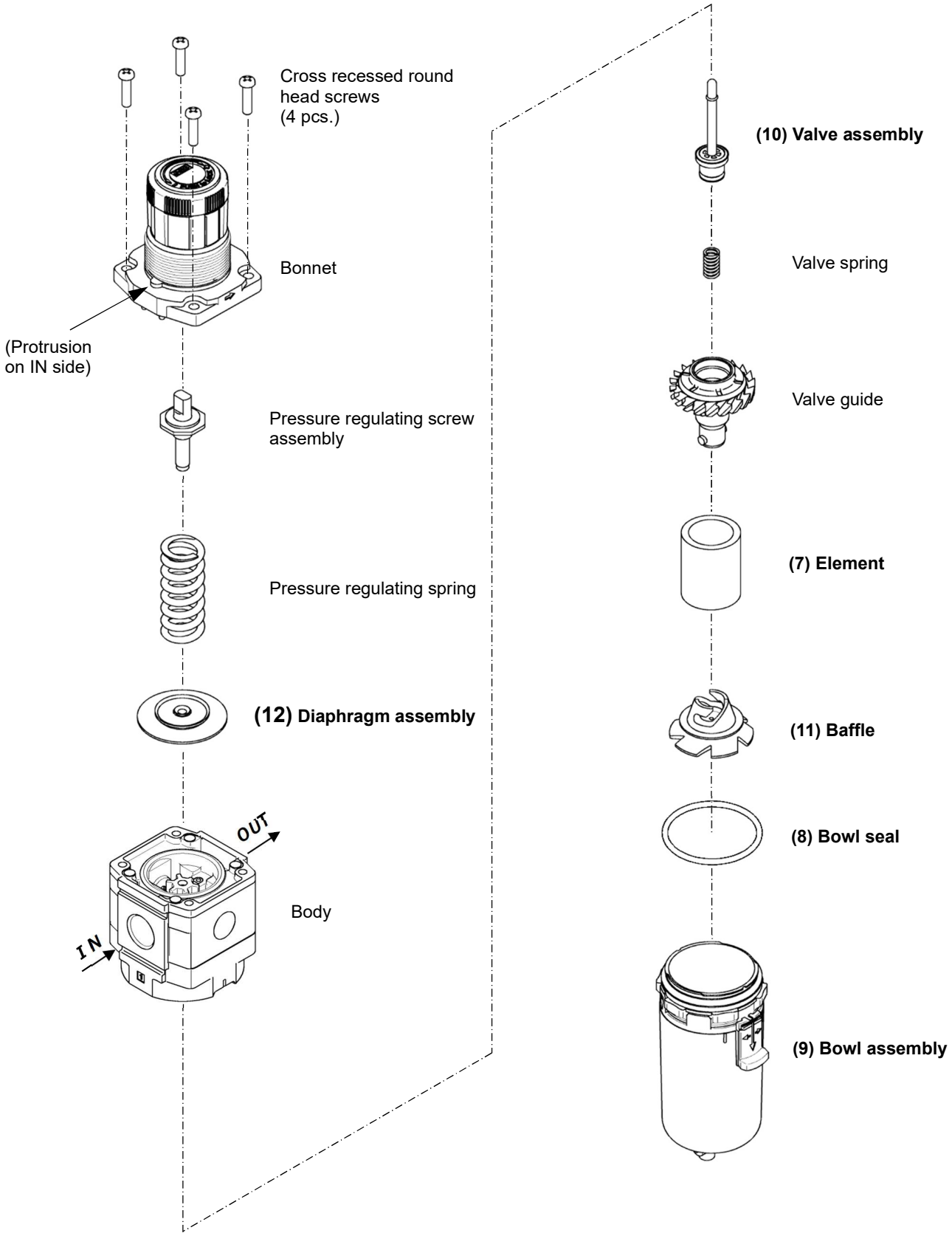

12-2. AW60-D

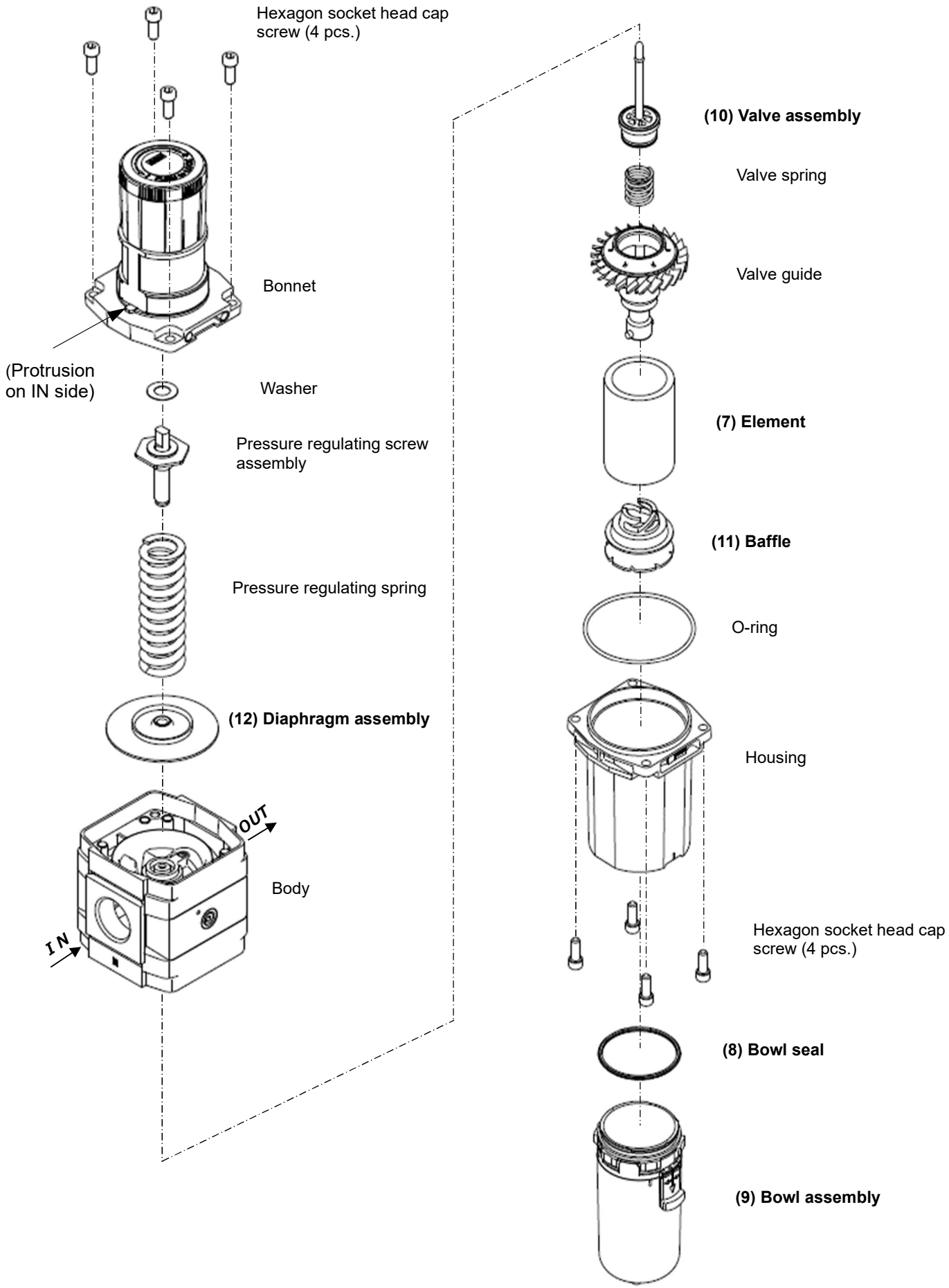
Hexagon socket head cap screw (4 pcs.)
Bonnet
(Protrusion on IN side)
Washer
Pressure regulating screw assembly
Pressure regulating spring
(12) Diaphragm assembly
OUT
Body
IN
(10) Valve assembly
Valve spring
Valve guide
(7) Element
(11) Baffle
O-ring
Housing
Hexagon socket head cap screw (4 pcs.)
(8) Bowl seal
(9) Bowl assembly

12-3. Disassembly Drawing of the Pressure Gauge Port
[Applicable model: without pressure gauge / with pressure gauge (round type)]

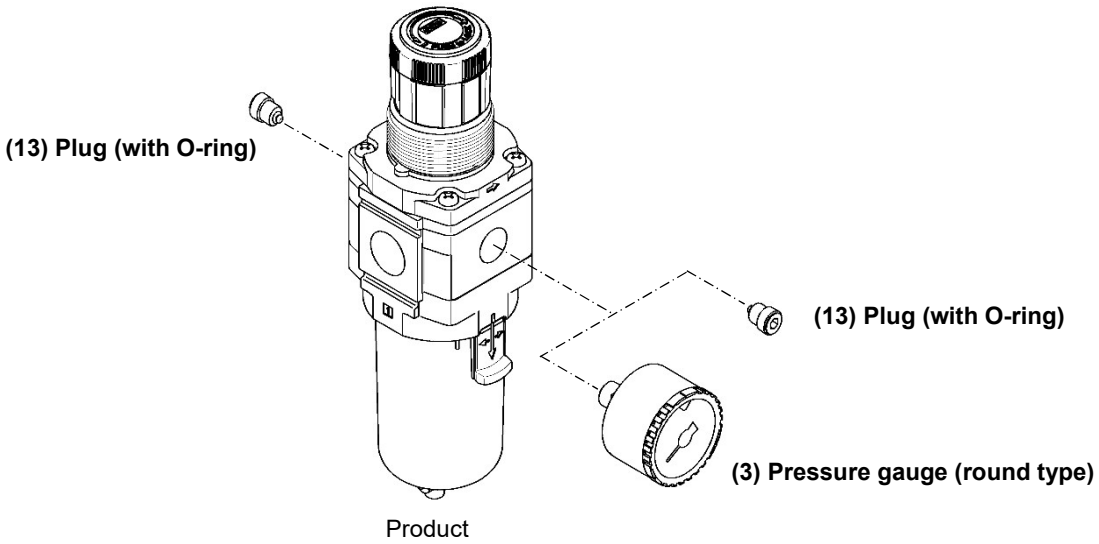

・It is not possible to change to an Square embedded pressure gauge, Digital pressure switch

12-4. Disassembly Drawing of the Pressure Gauge Port
[Applicable model: with square embedded type pressure gauge / with digital pressure switch]

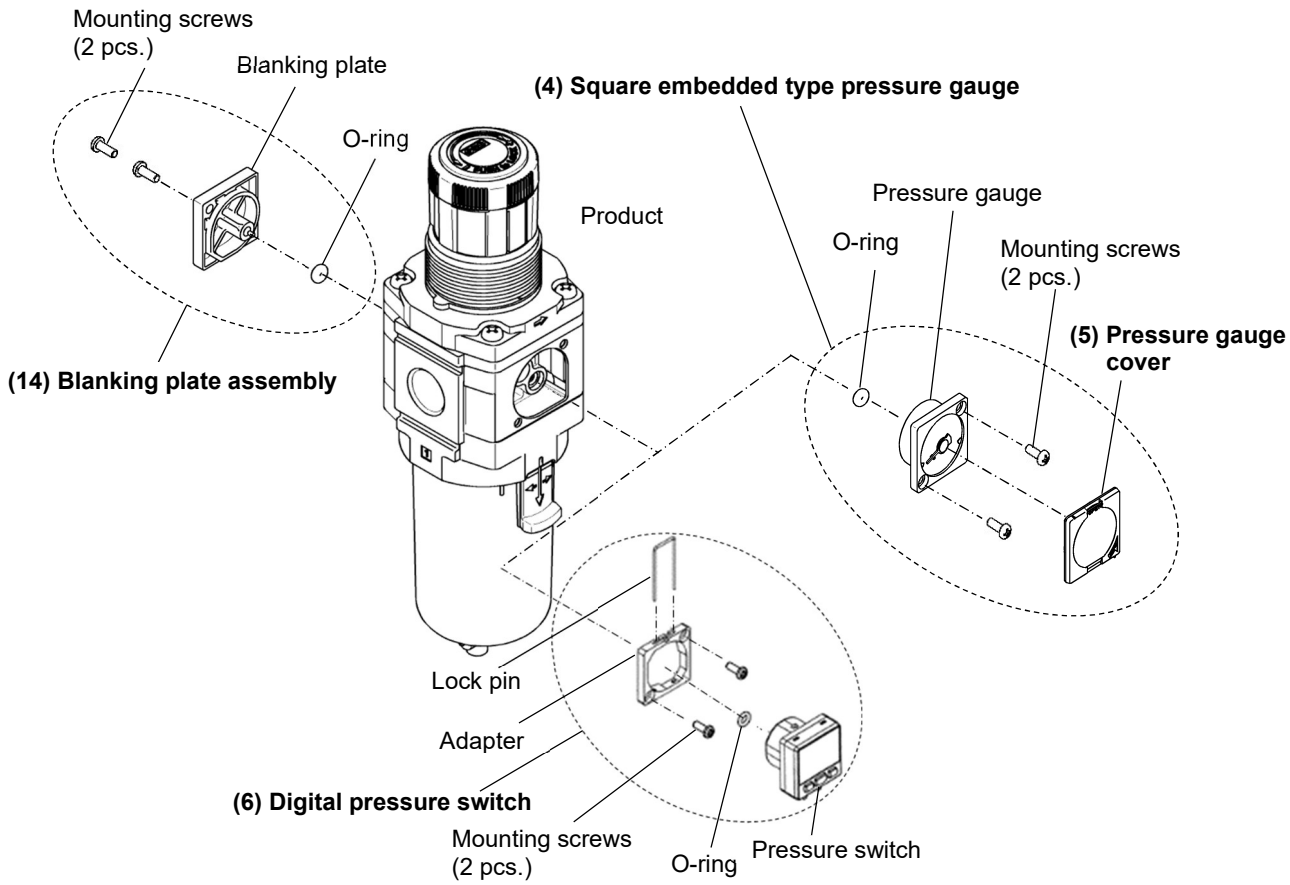

Note) Refer to the operation manual included in the product with digital pressure switch.

- When the pressure gauge or the digital pressure switch is mounted on the back of the product, swap all parts for the front and back.
- When swapping (4) Square embedded type pressure gauge and (6) Digital pressure switch, tighten them with 0.85+/-0.05N・m. Tighten others with 0.6+/-0.05N・m.

12-5. Disassembly Drawing of the Pressure Gauge Port
[Applicable model: with backflow function]

Note) Refer to the operation manual included in the product with digital pressure switch.

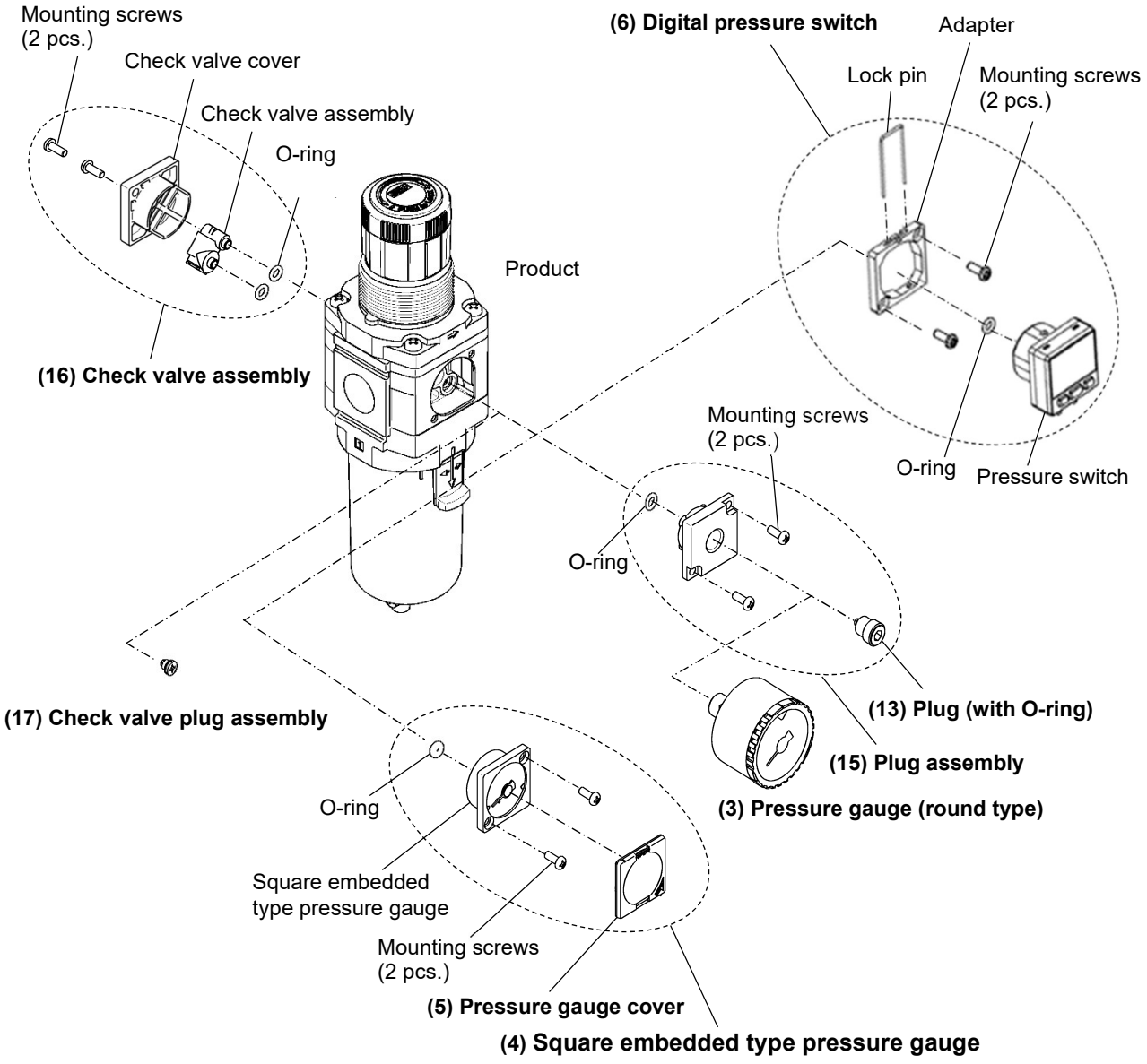

- When the pressure gauge or the digital pressure switch is mounted on the back of the product, swap all parts for the front and back.
- When swapping (4) Square embedded type pressure gauge and (6) Digital pressure switch, tighten them with 0.85+/-0.05N・m. Tighten others with 0.6+/-0.05N・m.

13. Dimensions

13-1. Standard (with round type pressure gauge)

Panel mounting dimensions

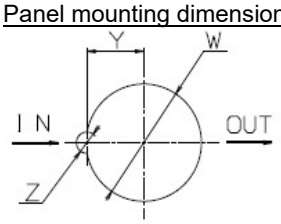

Plate thickness
AW20-D, AW30-D: Max. 3.5
AW40-D : Max. 5

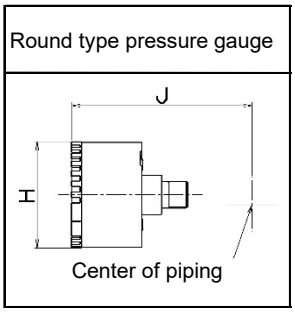

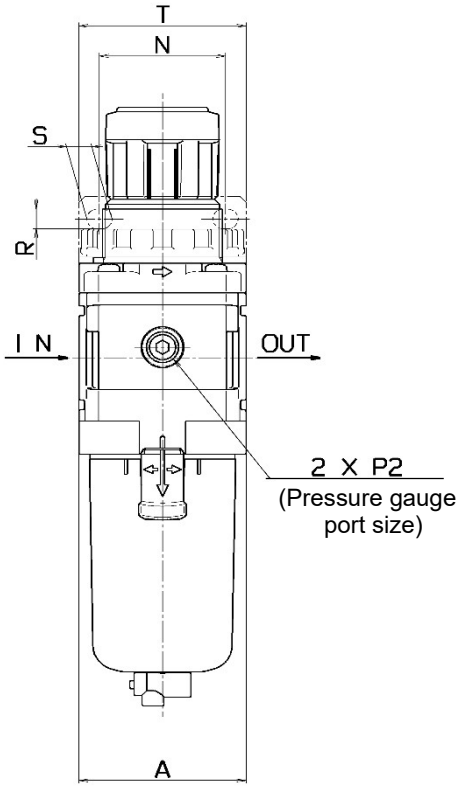

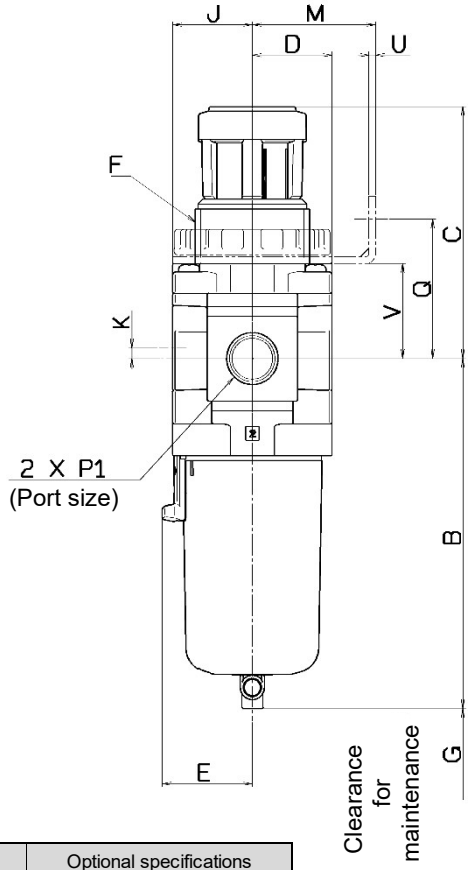

Dimensions

Model	Standard specifications											Optional specifications			
												Round type pressure gauge		Round type pressure gauge (With color zone)	
	P_1	P_2	A	B	C	D	E	F	G	J	K	H	J	H	J
AW20-D	1/8, 1/4	1/8	40	87.6	71.8	21	-	M28×1	40	21	5	Φ37.5	57.5	Φ37.5	58.5
AW30-D	1/4, 3/8	1/8	53	115.4	86.5	26.5	30	M38×1.5	55	26.5	3.5	Φ37.5	63	Φ37.5	64
AW40-D	1/4, 3/8, 1/2	1/8	70	147.1	91.5	35.5	38.4	M42×1.5	80	35.5	0	Φ42.5	73	Φ42.5	73
AW40-06-D	3/4	1/8	75	149.1	93	35.5	38.4	M42×1.5	80	35.5	0	Φ42.5	73	Φ42.5	73
AW60-D	3/4, 1	1/8	95	234.1	155	45	38.4	M62×1.5	30	45	0	Φ42.5	82.5	Φ42.5	82.5

Model	Optional specifications												Semi-standard specifications					
	Bracket mount							Panel mount				With auto drain	PC/ PA bowl		Metal bowl		Metal bowl with level gauge	
													With barb fitting	With drain guide	With drain cock	With drain guide	With drain cock	With drain guide
	M	N	Q	R	S	T	U	V	W	Y	Z	B	B	B	B	B	B	B
AW20-D	30	34	43.9	5.4	15.4	55	2.3	29.7	28.5	14	6	104.9	-	91.4	87.4	93.9	-	-
AW30-D	41	40	46	6.5	8	53	2.3	31.3	38.5	19	7	157.1	123.9	122.2	117.8	122.3	137.8	142.3
AW40-D	50	54	54	8.5	10.5	70	2.3	35.5	42.5	21	7	186.9	155.6	153.9	149.5	154	169.5	174
AW40-06-D	50	54	55.5	8.5	10.5	70	2.3	35.5	42.5	21	7	188.9	157.6	155.9	151.5	156	171.5	176
AW60-D	70	75	66	11	22	113	3.2	-	-	-	-	273.9	242.6	240.9	236.5	241	256.5	261

The dimension C is the length when the filter regulator knob is unlocked.

13-2. Standard (with square embedded type pressure gauge or digital pressure switch)

Panel mounting dimensions

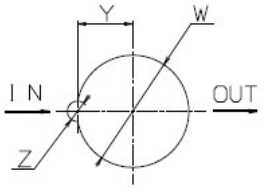

Plate thickness
AW20-D, AW30-D: Max. 3.5
AW40-D : Max. 5

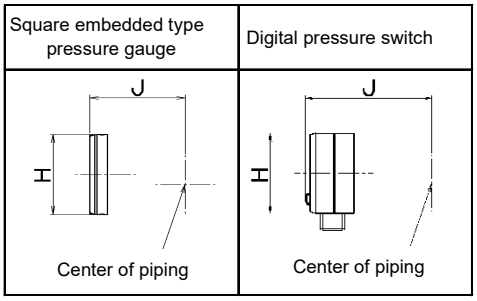

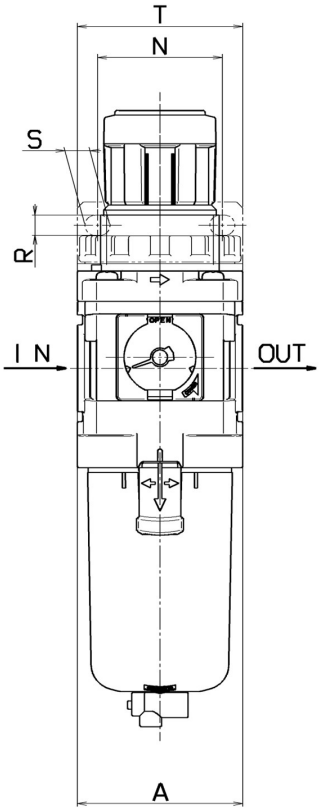

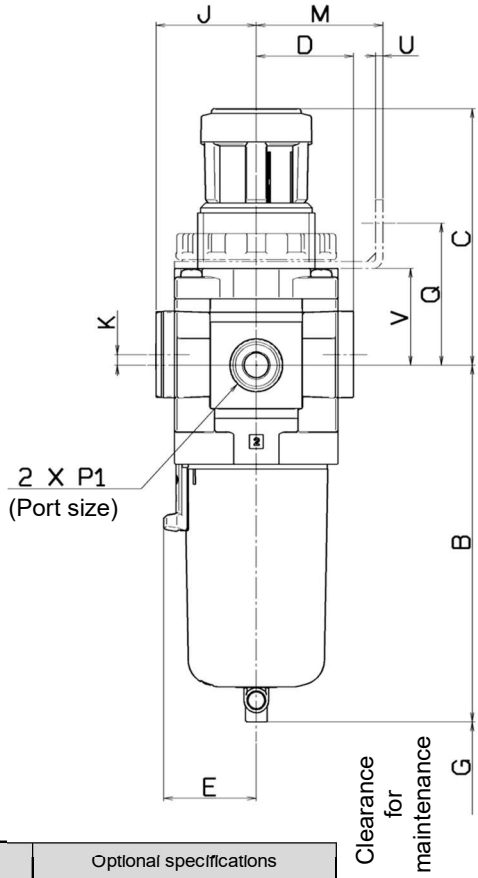

Dimensions

Model	Standard specifications									Optional specifications			
										Square embedded type pressure gauge		Digital pressure switch	
	P_1	A	B	C	D	E	F	G	K	H	J	H	J
AW20-D	1/8, 1/4	40	87.6	71.8	26	-	M28×1	40	5	□28	27	□27.8	37.5
AW30-D	1/4, 3/8	53	115.4	86.5	31.5	30	M38×1.5	55	3.5	□28	32.5	□27.8	43
AW40-D	1/4, 3/8, 1/2	70	147.1	91.5	40.5	38.4	M42×1.5	80	0	□28	41.5	□27.8	52
AW40-06-D	3/4	75	149.1	93	40.5	38.4	M42×1.5	80	0	□28	41.5	□27.8	52
AW60-D	3/4, 1	95	234.1	155	50	38.4	M62×1.5	30	0	□28	51	□27.8	61.5

Model	Optional specifications												Semi-standard specifications					
	Bracket mount							Panel mount				With auto drain	PC/ PA bowl		Metal bowl		Metal bowl with level gauge	
													With barb fitting	With drain guide	With drain cock	With drain guide	With drain cock	With drain guide
	M	N	Q	R	S	T	U	V	W	Y	Z	B	B	B	B	B	B	B
AW20-D	30	34	43.9	5.4	15.4	55	2.3	29.7	28.5	14	6	104.9	-	91.4	87.4	93.9	-	-
AW30-D	41	40	46	6.5	8	53	2.3	31.3	38.5	19	7	157.1	123.9	122.2	117.8	122.3	137.8	142.3
AW40-D	50	54	54	8.5	10.5	70	2.3	35.5	42.5	21	7	186.9	155.6	153.9	149.5	154	169.5	174
AW40-06-D	50	54	55.5	8.5	10.5	70	2.3	35.5	42.5	21	7	188.9	157.6	155.9	151.5	156	171.5	176
AW60-D	70	75	66	11	22	113	3.2	-	-	-	-	273.9	242.6	240.9	236.5	241	256.5	261

The dimension C is the length when the filter regulator knob is unlocked.

13-3. With backflow function
(With round type pressure gauge, square type pressure gauge or digital pressure switch)

Panel mounting dimensions

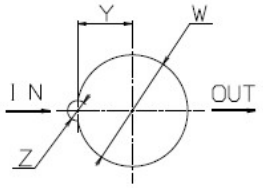

Plate thickness
AW20K-D, AW30K-D: Max. 3.5
AW40K-D : Max. 5

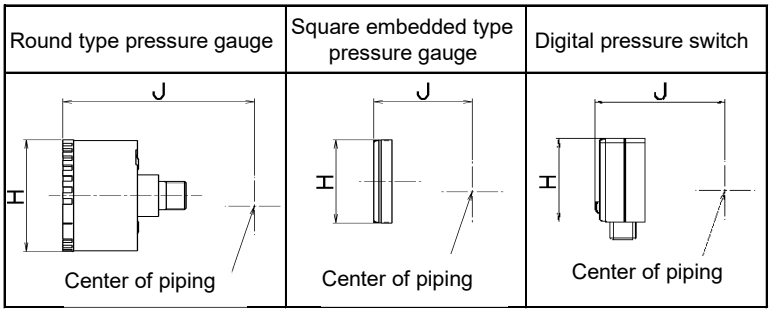

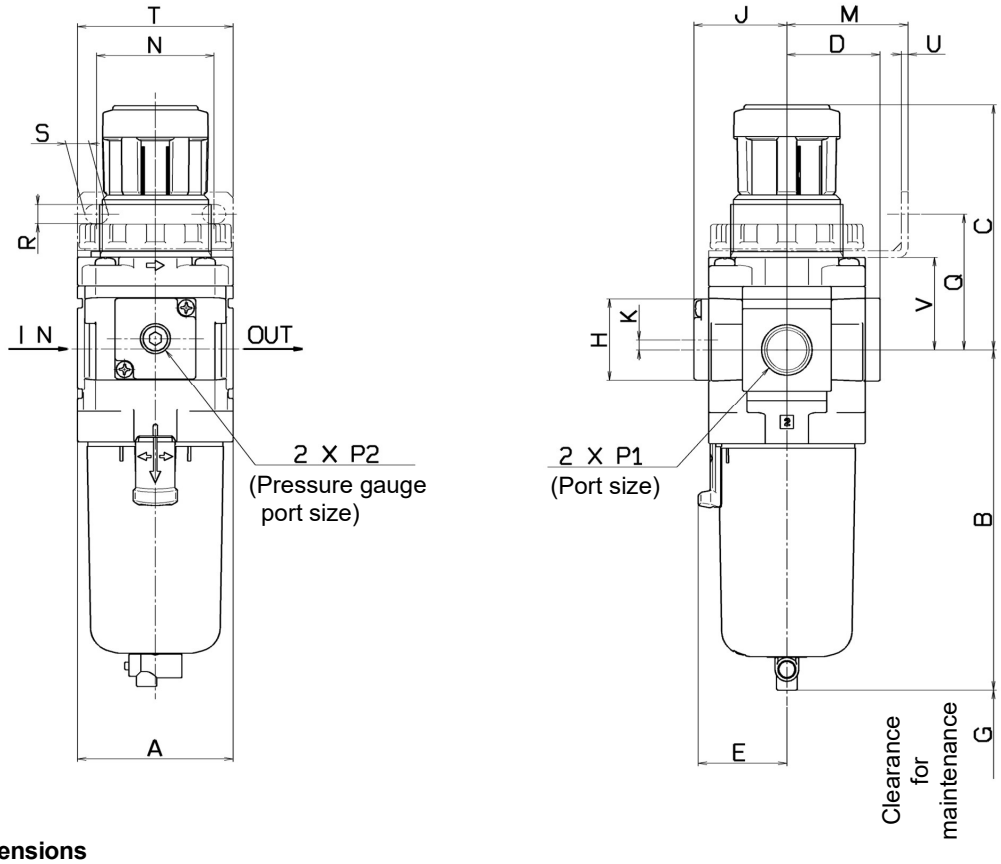

Dimensions

Model	Standard specifications											Optional specifications							
												Square embedded type pressure gauge		Digital pressure switch		Round type pressure gauge		Round type pressure gauge (With color zone)	
	P_1	P_2	A	B	C	D	E	F	G	J	K	H	J	H	J	H	J	H	J
AW20K-D	1/8, 1/4	1/8	40	87.6	71.8	26	-	M28×1	40	26	5	□28	27	□27.8	37.5	Φ37.5	62.5	Φ37.5	63.5
AW30K-D	1/4, 3/8	1/8	53	115.4	86.5	31.5	30	M38×1.5	55	31.5	3.5	□28	32.5	□27.8	43	Φ37.5	68	Φ37.5	69
AW40K-D	1/4, 3/8, 1/2	1/8	70	147.1	91.5	40.5	38.4	M42×1.5	80	40.5	0	□28	41.5	□27.8	52	Φ42.5	78	Φ42.5	78
AW40K-06-D	3/4	1/8	75	149.1	93	40.5	38.4	M42×1.5	80	40.5	0	□28	41.5	□27.8	52	Φ42.5	78	Φ42.5	78
AW60K-D	3/4, 1	1/8	95	234.1	155	50	38.4	M62×1.5	30	50	0	□28	51	□27.8	61.5	Φ42.5	87.5	Φ42.5	87.5

Model	Optional specifications												Semi-standard specifications					
	Bracket mount							Panel mount				With auto drain	PC/ PA bowl		Metal bowl		Metal bowl with level gauge	
													With barb fitting	With drain guide	With drain cock	With drain guide	With drain cock	With drain guide
	M	N	Q	R	S	T	U	V	W	Y	Z	B	B	B	B	B	B	B
AW20K-D	30	34	43.9	5.4	15.4	55	2.3	29.7	28.5	14	6	104.9	-	91.4	87.4	93.9	-	-
AW30K-D	41	40	46	6.5	8	53	2.3	31.3	38.5	19	7	157.1	123.9	122.2	117.8	122.3	137.8	142.3
AW40K-D	50	54	54	8.5	10.5	70	2.3	35.5	42.5	21	7	186.9	155.6	153.9	149.5	154	169.5	174
AW40K-06-D	50	54	55.5	8.5	10.5	70	2.3	35.5	42.5	21	7	188.9	157.6	155.9	151.5	156	171.5	176
AW60K-D	70	75	66	11	22	113	3.2	-	-	-	-	273.9	242.6	240.9	236.5	241	256.5	261

The dimension C is the length when the filter regulator knob is unlocked.

Revision history
A 40-06, 60 size added, Corrected. Dec. 2020.
B Changed the nylon bowl assembly number. (30, 40 size) Nov. 2023.
C Change: About element replacement AW30 Dimension (B) Add: Grease pack No. Change: Reference tightening torque Add: Reassembly notes Delete: Round pressure gauge (semi-standard:Z) dimensions Jul. 2025.
D Add: Lock Button Notes and Diagram Case Installation Case Removal Add: Digital pressure switch part numbers Jun. 2026.

SMC Corporation

Tel: + 81 3 5207 8249 Fax: +81 3 5298 5362
URL https://www.smcworld.com

Note: Specifications are subject to change without prior notice and any obligation on the part of the manufacturer.
© SMC Corporation All Rights Reserved