SMC

DOCUMENT No.:AR＊-OMF0010

OPERATION MANUAL

PRODUCT NAME : A I R　R E G U L A T O R

MODEL　:

AR10-M5 (B, G, P) (-1, N, R, Z)

AR20- (F, N)01～02 (B, E, G, P) (-1, N, R, Z)

AR25- (F, N)02～03 (B, E, G, P) (-1, N, R, Z)

AR30- (F, N)02～03 (B, E, G, P) (-1, N, R, Z)

AR40- (F, N)02～04 (B, E, G, P) (-1, N, R, Z)

AR40- (F, N)06 (B, E, G, P) (-1, N, R, Z)

AR50- (F, N)06～10 (B, E, G, P) (-1, N, R, Z)

AR60- (F, N)10 (B, E, G, P) (-1, N, R, Z)

- Read this operation manual carefully to understand before installation and operation.
- Pay extra attention on the clause concerning the safety.
- Keep this operation manual available whenever necessary.

SMC CORPORATION

CONTENTS

		PAGE
1.	PRECAUTIONS FOR SAFETY	1～3
2.	APPLICATION	4
3.	SPECIFICATIONS	4
4.	HOW TO ORDER	4
5.	TROUBLE SHOOTING	5～6
6.	CONSTRUCTION／PARTS LIST	7
7.	HOW TO REPLACE	8～12
8.	DIMENSIONS	13

CONTACT ADDRESS: SMC CORPORATION

1－16－4, SHINBASHI, MINATO－KU, TOKYO
105－8659, JAPAN
TEL: 03－3502－8271

1. PRECAUTIONS FOR SAFETY

Precautions shown here are to ensure the product is used correctly and safely, and to prevent hazard and damage inflicting upon people from occurring. These precautions are divided into three catagories, "Caution", "Warning", and "Danger" to indicate the degree of possible hazard and damage, and urgency.
As all these are important for safety, never fail to follow them in addition of ISO4414, JIS B8370, and other safety regulations.

⚠ Caution : Possible harmful effects are expected to be on people and possible loss is expected only of objects when wrong operation occurred.

⚠ Warning : Possible loss or serious injury of people is expected when wrong operation occurred.

⚠ Danger : Imminebt dager that possible loss or serious injury of people is expected without evacuation.

※1)ISO 4414 Pneumatic fluid powor-Recomendations for the application of equipment to transmission and control systems.

※2)JIS B 8370 Common regulations for penumatic systems.

⚠ WARNING

①Suitability of penumatic equipment should be determined by a designer of the penumatic system or a person who prescribes its specifications.

Since the product shown here is used in various operating conditions, its suitability to a system should be determined by the pnuumatic system designer or the person prescribes its specifications based on necessary analysis and tests. The person who determined the suitability of the system is responsible for the performance at a certina point of time and safety assurnace of this system.
A system should be constructed by referring to the latest product information and catalogues, discussing all the contents of specifications, and considering possibilities of equipment failure.

②Equipment should be handled by those who have sufficient knowledge and experience

Compressed air fluid could be hazardous fi it is handled incorrectly. Assembly, operation and maintenance of machinery and equipment for which pneumatic apparatuses are used should be performed by those who have sufficient knowledge and experience.

③Never handle the machinery or equipment, or never take out the apparatus until safety is confirmed

a. Check and maintenance of machinery or equipment should be performed after it is confirmed that dropping or uncontrollable running prevention measures are taken for the equipment on which the product is mounted.
b. Apparatuses should be taken out after it is confirmed equipment corresponding to air supply, that is an energy source, should be turned off; and compressed air in the sustem should be exhausted.
c. Re-starting of machinery or equipment should be done with ample care after it is confirmed that prevention measure s for sudden movement are taken.

④When the product is used in the following conditions or environment, consideratins for safety measures should be given along with consultation to our company

a. Outdoor usage, or usage in conditions or environment outside of the specifications indicated.
b. Usage for nuclear power, railroad, air navigation, vehicle, medical equipment, appliances contacting food and beverage, entertainment appratuses, emergency shutdown circuits, cluthc/break circuits for pressing, and safety devices.
c. Usage for applications which espacially require safety because considerable effects to people and properties are expected.

Precautions for design

⚠ WARNING

① Consult SMC if no leakage is allowed due to the environment, or operating fluid is not air

② External parts including the bonnet, handle, cover are made of resin. Organic solvents including synthetic fluid, chemicals including acetone, alcohol, ethylene chloride, sulphuric acid, nitrate, hydrochrolic acid, cutting oil, kerosene, gasoline, lock material of screw are harmful. Don't use the regulator where containing those.

③ Protect from ultra violet ray and radiation heat by shield.

④Safety device needs to be installed if output pressure exceeding set pressure lead to cause the breakage of outlet device and equipment or malfunction.

⚠ CAUTION

① Air consumption from release port is 0.1L／min(ANR) or less.

Selection

⚠ WARNING

① Mineral grease used for internal sliding surface and packing may leak to the outlet. Please contact SMC if this is a problem.

② Residual pressure(outlet pressure) is not released even if releasing inlet pressure. Select the regulator with counter flow function. Without the function, residual pressure may not be eliminated.

③ Long absence of operation or operation with outlet circuit sealed or balance circuit may cause pressure fluctuation in outlet set pressure. Please consult SMC if this is a problem.

④ Set pressure of outlet pressure shall be 85% or less of inlet pressure. Pressure over 85% makes operation susceptible to flow and inlet pressure which lead to cause unstable operation.

⑤ Maximum set pressure range in the spec. has margin. Pressure set may be higher than the maximum value.

⑥ If regulator is used with circuit which require high exhaust sensitivity or set precision, please consult SMC.

INSTALLATION ・ ADJUSTMENT

⚠ WARNING

① Connect the regulator ensuring the direction of "IN" and "OUT" for air direction or an arrow. Wrong connection lead to cause malfunction.

② Operate the pressure adjusting handle manually. Tools may break the handle.

③ Adjust the pressure ensuring inlet pressure and outlet pressure. Excessive rotation may cause internal parts.

④ Outlet pressure might change if uses for a long time. Please confirm set pressure regularly.

⚠ CAUTION

① Don't drop nor apply impact during transportation or installation. gauge. These lead to cause precision failure of pressure .

② Don't install where highly humid or temperature is high. Or pressure gauge may malfunction

③ Adjust pressure incrementally. Pressure may become lower than set pressure if adjusted b decreasing the value. Rotate the handle clockwise to raise the set pressure. Counterclockwise, reduce the pressure

④ Outlet pressure may rise if eliminate the inlet pressure after pressure setting and supply pressure again. The pressure becomes close to the set pressure after air is consumed in outl

⑤ For the regulator with the pressure gauge, don't apply pressure over the maximum scale of the pressure gauge in order to protect the gauge.

PIPING

⚠ **WARNING**

① Flash or clean piping before piping to eliminate swarf, cutting oil, solid foreign material. Remaining of these lead to cause malfunction.

② When screw in piping or fitting, avoid entering of chips and sealing materials from piping screws into the inside of equipment. Or malfunction is led to occur. When use sealing tapes, leave 1.5～2 threads of a screw and starts taping.

③ Hold the female screw side and screw in piping with recommended tightening torque. Insufficient tightening torque lead to cause loose piping or sealing failure. Excessive torque may lead to cause screw breakage. Tightening without holding female screw side applies excessive force to the piping bracket which lead to cause breakage.

Recommended torque unit: N・m

Screw	M5	1／8	1／4	3／8	1／2	3／4	1
Torque	*1	7～9	12～14	22～24	28～30	28～30	36～38

*1: First, tighten it by hand , then give it an additional 1/6 turn with a wrench.

④ Don't apply any torsional moment, or bending moment except the weight of the regulator itself. External pipings need its support separately. Hard piping like steel tube is susceptible to excessive moment load or vibration. Insert the flexible tube to cancel the influence.

AIR SOURCE

⚠ **WARNING**

① Use clean air. Compressed air containing chemicals, organic solvent, synthetic oil or corrosive gas may lead to cause breakage of parts or malfunction.

② Air containing much drain lead to cause malfunction. Install the air drier or the after-cooler before the regulator.

MAINTENANCE

⚠ **WARNING**

① Maintenance or check should be done by following the procedure in the operation manual. Incorrect handling of the product may cause breakage or malfunction of the equipment or device.

⚠ **CAUTION**

① For First-aid for setting failure or leakage, check the internal valve sliding surface or the valve seat before giving first-aid treatment.

2. APPLICATION

This instrument aims at pressure controlling of air lines.

3. SPECIFICATIONS

Model	AR10	AR20	AR25	AR30	AR40	AR40−06	AR50	AR60
Port size	M5	1/8,1/4	1/4,3/8	1/4,3/8	1/4,3/8,1/2	3/4	3/4,1	1
Fluid	Air							
Proof pressure	1.5MPa							
Max. operating pressure	1.0MPa							
Set pressure range	0.05～0.7MPa	0.05～0.85MPa						
Note1) Gauge port size	Note2) 1/16	1/8	1/8	1/8	1/4	1/4	1/4	1/4
Relieving pressure	—	Note3) Set pressure plus 0.05MPa {When relieving flow is 0.1L/min(ANR)}						
Ambient and fluid temperature	−5～60°C(Should be no freezing)							
Construction	Relieving style							
Weight (kg)	0.06	0.26	0.21	0.29	0.44	0.47	1.17	1.22

Note1) Square embedded pressure gauge (AR20～60)、Without pressure gauge mounting threads.
Note2) Use bush(part no. 131368) when connecting pressure gauge port size R1/8 to R1/16.
Note3) Except AR10.

4. HOW TO ORDER

AR 30 − F 03 BE − 1N

Regulator

Body size

10	M5
20	1/8
25	1/4
30	3/8
40	1/2
50	3/4
60	1

Thread

Nil	Meter thread(M5)
	R_C
N	NPT
F	G

Port size

M5	M5×0.8
01	1/8
02	1/4
03	3/8
04	1/2
06	3/4
10	1

Option

Note2) 1	Setting pressure 0.02～0.2MPa
N	Non−relieving style
R	Flow direction:From right to left
Note3) Z	Nameplate、Pressure gauge Unit:PSI・°F

When specifying more then one option, indicate symbols numerically them alphabetically.
Note2) Only the adjusting spring is different from the standard model.
Note3) Thread: M5、NPT.

Accessory

Symbol	Description	Applicable model
Note1) Nil	—	—
B	With bracket	AR10～60
E	Square embedded pressure gauge (With limit indicator)	AR20～60
Note1) G	Circular pressure gauge (Without limit indicator)	AR10
	Circular pressure gauge (With limit indicator)	AR20～60
P	Panel mounting(With set nut)	AR10～60

Note1) Pressure gauge mounting screws:
AR10 ・・・ 1/16, AR20～30 ・・・ 1/8,
AR40～60 ・・・ 1/4.

5. TROUBLESHOOTING

Refer to Fig.1(showen in next page)

TROUBLE		POSSIBLE CAUSE	REMEDY	Applicable model
Demarcation	Phenomenon			
Pressure	Pressure in not regulated	1. Opposite fllow direction oropposite installation of regulator	1. Check flow diretion and install the regulator correctly if wrong	AR10～60
		2. Foreign materials caugth in valve seat or valve "O" ring	2. Remove valve guide and clean the valve seat or valve"O" ring. Grease up after washing the sliding surface of valve "O" ring.	AR10～60 No valve "O" ring for AR10
		3. Damaged rubber lining on valve	3. Replace the valve (assembly).	AR10～60
	Set pressure does not return to zero when pressure handle is loosened	1. Foreign materials caught in valve seat or valve "O" ring	1.Remove valve guide and clean the valve seat or valve"O" ring. Grease up after washing the sliding surface of valve "O" ring.	AR10～60 No valve "O" ring for AR10
		2. Valve rubber seat is damaged	2. Replace the valve (assembly).	AR10～60
		3. Valve adheres to the valve guide	3. Wash the sliding surface of valve "O" ring and grease up	AR20～60
Air leaks	Air leaks the bonnet exhaust port(near the handle)	1. Diaphragm is damaged	1. Replace the diaphragm assembly.	AR20～60
		2. Piston packing is damaged	2. Replace or clean the piston assembly. Then, grease up the piston packing and the sliding surface.	AR10
		3. Foreign material is caught in the exhaust valev seat	3. Clean the exhaust valve seat, or replace the diaphragm assembly.	AR10～60
		4. Foreign material is caught in the valve seat of valve "O" ring	4. Remoce the valve guide to clean valve, valve seat and the valve "O" ring. Then, grease up the valve "O" ring and the sliding surface.	AR10～60 No valve "O" ring for AR10
		5. Valve rubber seat is damaged	5. Replace the valve (assembly).	AR10～60
		6. Back pressure exceeding the set pressure is applied to the outlet	pressure does not exceed the set pressure	AR10～60
	Air leaks from the bonnet and the body	1. Loosened bonnet	1. Fasten the bonnet	AR10～60
		2. Damaged diaphragm	2. Replace the diaphragm assembly.	AR20～60

Note) The grease used recommends Mitsubishi diamond multipurpose No.2.

AR10

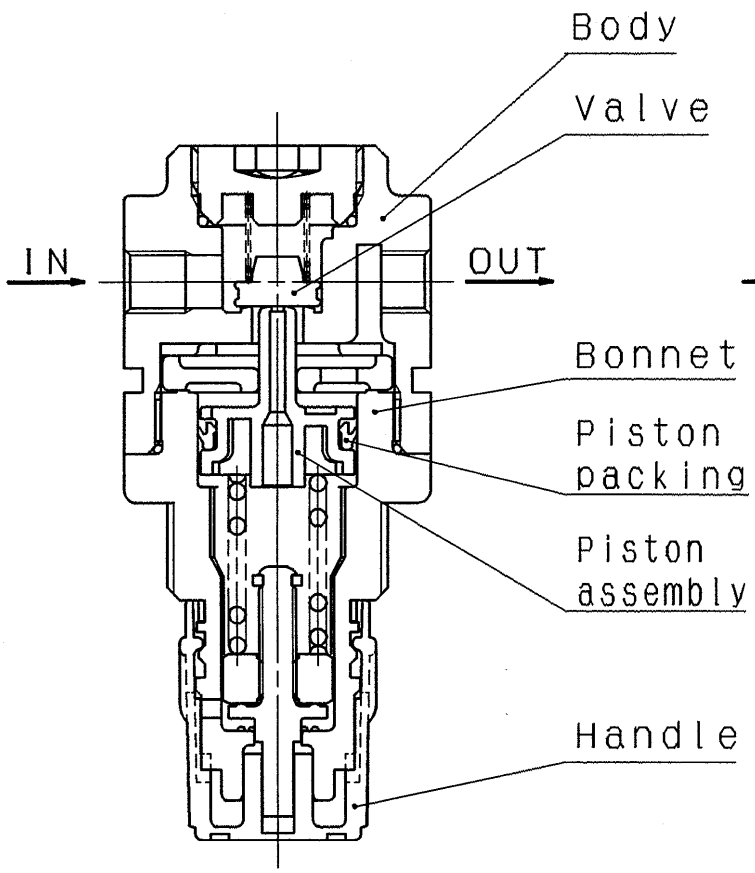

AR20~AR60

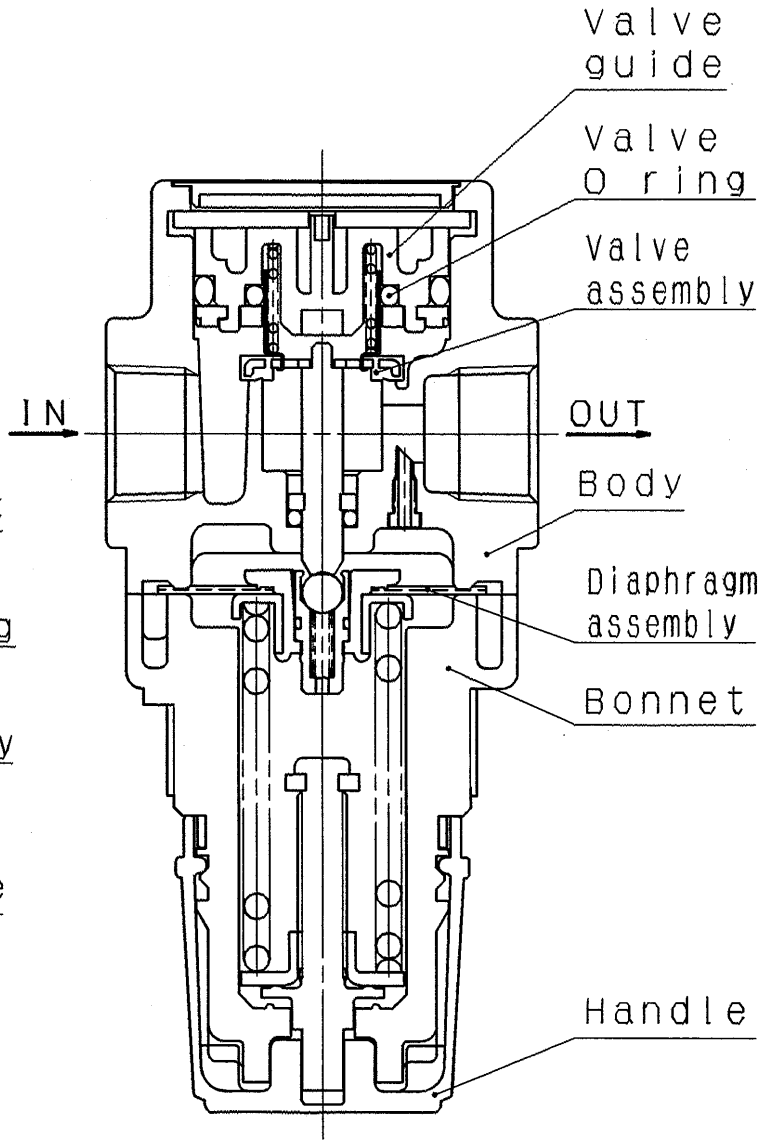

Fig.1

6. CONSTRUCTION／PARTS LIST

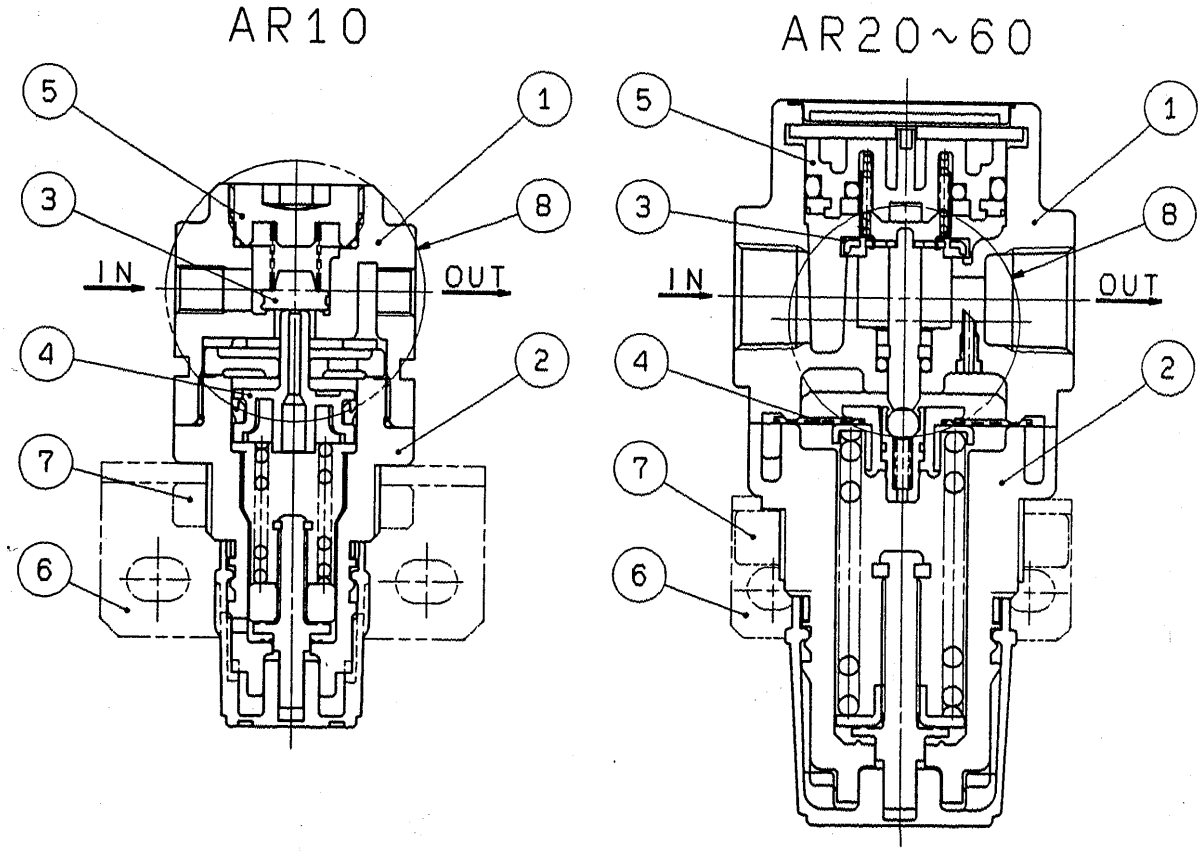

COMPONENT PARTS

No.	Description	Material			Note
		AR10,20	AR25~40(-06)	AR50,60	
①	Body	Zinc die cast	Aluminum die cast		Painted platinumsilver
②	Bonnet	Polyacetal		Aluminum die cast	Painted black

OPTION／REPLACEMENT PARTS

No.	Description	Material	Part No.			
			AR10	AR20	AR25	AR30
③	Valve assembly	HNBR	AR10P-090S	AR20P-090AS	AR25P-090AS	AR30P-090AS
④	Diaphragm assembly	Weatherproof NBR	Note1) AR10P-150AS	AR20P-150AS	AR25P-150AS	AR30P-150AS
⑤	Valve guide assembly	POM	131329	AR20P-050AS	AR25P-050AS	AR30P-050AS
⑥	Note2) Bracket assembly	Steel plate	AR10P-270AS	AR20P-270AS	AR25P-270AS	AR30P-270AS
⑦	Set nut	POM	AR10P-260S	AR20P-260S	AR25P-260S	AR30P-260S
⑧	Pressure gauge Note4) Square type	—	—	GC3-10AS		
	Pressure gauge Note5) Circular	—	Note6) G27-10-R1	G36-10-□01		

No.	Description	Material	Part No.			
			AR40	AR40-06	AR50	AR60
③	Valve assembly	HNBR	AR40P-090AS	AR40P-090AS	AR50P-090AS	AR60P-090AS
④	Diaphragm assembly	Weatherproof NBR	AR40P-150AS	AR40P-150AS	AR50P-150AS	AR50P-150AS
⑤	Valve guide assembly	POM	AR40P-050AS	AR40P-050AS	AR50P-050AS	AR60P-050AS
⑥	Note2) Bracket assembly	Steel plate	AR40P-270AS	AR40P-270AS	Note3) AR50P-270AS	
⑦	Set nut	POM	AR40P-260S	AR40P-260S	—	—
⑧	Pressure gauge Note4) Square type	—	GC3-10AS			
	Pressure gauge Note5) Circular	—	G46-10-□02			

Note1) AR10 is piston type. Piston and Packing (KSYP-13) assembly. Material of packing is NBR.

Note2) Bracket and Set nut assembly.

Note3) Bracket and Mounting screws(2 pcs) assembly. Note4) With O ring (1 piece) and Mounting screws(2 pcs). For 0.2MPa part number: GC3-2AS. Note5) In the gauge part number □ indicates kind of the connecting thread. Put nothing for Rc and "N" for NPT thread. For 0.2MPa part number : G36-2-□01／G46－2－□02.

Note6) For 1.0MPa pressure gauge only.

7. REPLACEMENT PROCEDURE

⚠ WARNING

Before replacement, ensure that the regulator is not pressurized
Rotate the pressure adjusting handle to zero
After replacement, ensure that specified function is satisfied and external leakage is not found before starting operation

○ Valve guide (assembly)、valve assembly

Type: AR10

Process	Procedure	Tools	Check item
Disassembly	① Remove the valve guide Insert the hexagon spanner to the valve guide hexagon hole, and rotate counterclockwise to remove	Hexagon spanner Nominal: 6	—
	② Remove the valve spring	—	—
	③ Remove the valve	—	—
Assembly	④ Mount the valve Set the valve so that the convex surface faces to the valve guide	—	Concave surface(top) is the valve guide
	⑤ Mount the valve spring Insert the valve so that the inner circumference of the valve spring fit in the convex surface of the valve.	—	—
	⑥ Ensure "O" ring is mounted Ensure valve guide seal "O" ring is mounted. Mount "O" ring if the ring is missing.	—	Presence of "O" ring
	⑦ Mount the valve guide Insert hexagon spanner to the valve guide hexagon hole, and rotate the spanner clockwise to tighten the guide. See check item for the tightening torque.	Hexagon spanner Nominal: 6	tightening torque: 0.75±0.15N·m

Type: AR20～60

Process	Procedure	Tools	Check item
Disassembly	① Remove the cap Insert the small screw driver in the gap between the body and the cap and dig up the cap	Small driver	—
	② Remove the cover Insert the circular pliers to two holes of the cover and rotate 90 degree, and lift it.	Circular pliers Nominal: 125	—
	③ Remove the valve guide assembly Hold the valve guide with a small pliers, and lift.	Small pliers	—
	④ Remove the valve spring	—	—
	⑤ Remove the valve	—	—
Assembly	⑥ Mount the valve Mate the stem convex and the valve center hole.	—	Positioning the stem and the valve(centering)
	⑦ Mount the valve spring Insert the valve spring to the valve hole	—	—
	⑧ Assemble the valve guide assembly and the cover temporally Mate two valve guide assembly convex to two cover concave for temporal assembly	—	—
	⑨ Mount the assembly of the valve guide and the cover Mate the notch of the body cover hole and the detent of the cover. Then push the assembly of them. Insert the circular plier to two holes of the cover to rotate 90 degree to settle.	Circular pliers	—
	⑩ Mount the cap Mate the convex of the body cover and the concave of the cap, and push them in to settle. Ensure the end of the body and the cap are almost	—	Orientation of the body and the cap. Body end and the cap are almost flat.

○ Diaphragm assembly (Piston assembly)

Type: AR10

Process	Procedure	Tool	Check item
Disassembly	① Remove the bonnet assembly Hold the bonnet with a spanner on the spanner flat, and rotate counterclockwise to remove the	Spanner Nominal: 16	—
	② Remove the piston assembly from the bonnet Pull out the piston assembly facing the handle downwards. Otherwise, pressure adjusting screw assembly or pressure adjusting spring fall off.	—	—
Assembly	③ Mount the piston assembly to the bonnet assembly Insert the piston assembly to the bonnet so that the piston assembly convex faces the body. If pressure adjusting screw or pressure adjusting spring is not mounted on the bonnet, mount it before mounting the piston assembly.	—	—
	④ Ensure the chamber is mounted on the body If the chamber is removed during disassembly, mount the chamber ensuring the right direction of the chamber. Convex of the chamber shall face the	—	Presence of chamber. Mount if there is not a chamber Direction
	⑤ Mount the bonnet assembly to the body Hold the bonnet assembly with a spanner on the spanner flat, and rotate the body clockwise to settle. See check item for the tightening torque.	Spanner Nominal: 16	Tightening torque: 1.8±0.3N・m

Type: AR20～60

Process	Procedure	Tools	Check item
Disassembly	① Remove the bonnet Rotate the set screw counterclockwise with cross pointed driver to remove the bonnet from the body.	Cross pointed driver	—
	② Remove parts in order of the pressure adjusting screw assembly, pressure adjusting spring, and the Please be noted that the diaphragm assembly adheres to the bonnet if disassemble parts with the handle facing downwards	—	—
Assembly	③ Mount parts to the body in order of the diaphragm assembly, pressure adjusting spring, and pressure Mind the direction of the diaphragm assembly and pressure adjusting screw assembly. See attached disassembly drawing.	—	Mind the direction of the diaphragm assembly and the pressure adjusting screw assembly
	④ Mount the bonnet to the body Mount the bonnet to the body, and settle it roughly with four(4) set screws with a cross pointed driver. Then, Tighten screws diagonally with the tightening torque in the check item to settle.	Cross pointed driver	Tightening torque AR20 2.15±0.3N・m AR25 2.35±0.3N・m AR30 2.35±0.3N・m AR40 3.5±0.3N・m AR50 4.5±1N・m AR60 4.5±1N・m

○ Bracket assembly, panel mount

Process	Procedure	Tools	Check items
Assembly	① Mount the parts to the bracket(panel) Mate the bracket(panel) concave and the bonnet convex to mount the bracket.	—	
	② Settle the bracket(panel) with set nut. Rotate the set nut clockwise with a hook spanner(spanner for AR10) to settle the parts to the bracket(panel). Set nut knurling surface shall face the bracket. See check item for tightening torque. When mounting with bracket, set nut tightened manually is adequate fir general used.	AR10: spanner nominal: 24 AR20～40: Hook spanner Nominal AR20: 34/38 AR25: 40/42 AR30: 52/55 AR40: 52/55	Tightening torque AR10 5±0.8N・m AR20 14±1.5N・m AR25 17±2N・m AR30 22±3N・m AR40 25±3N・m

○ Pressure gauge

Circular pressure gauge: Applicable AR10 option G、AR20～60 option G

Process	Procedure	Tools	Check item
Disassembly	① Remove the pressure gauge Hold the pressure gauge with a spanner on the spanner flat. Then, rotate the gauge Spanner for AR10 is a compact spanner.	Nominal spanner AR10:21 AR20～30:12 AR40～60:14	—
Assembly	② Rap the pressure gauge thread with the seal tape leaving 1.5 to 2 threads from the end.	—	Wrap seal tape leaving 1.5 to 2 threads
	③ Mount the pressure gauge Hold the pressure gauge on the spanner flat with a spanner, and rotate it clockwise to mount the circular pressure gauge. Use compact spanner for See Check item for tightening torque of pressure gauge.	Nominal spanner AR10:21 AR20～30:12 AR40～60:14	Tightening torque AR10: 3～4 N·m AR20～30: 7～9 N·m AR40～60: 12～14 N·m

Square embedded pressure gauge: Applicable for AR20～60 option E

Process	Procedure	Tools	Check item
Disassembly	① Remove the pressure gauge cover counterclockwise to pull out the pressure gauge cover	—	—
	② Remove the pressure gauge Rotate two set screws counterclockwise with cross pointed driver to remove the pressure gauge and two set screws.	Cross pointed driver	—
Assembly	③ Ensure "O" ring is mounted to the pressure gauge Mount "O" ring to the pressure gauge if the ring fall off.	—	Presence of "O" ring
	④ Mount the pressure gauge Rotate two set screws clockwise with cross pointed driver to set screws temporary. Then settle them with tightening torque in check item.	Cross pointed driver	Tightening torque: 0.3±0.05N·m
	⑤ Mount the pressure gauge cover Insert the pressure gauge mating two detent of the pressure gauge and holes for them so that the arrow of the pressure gauge cover comes upper right. Rotate the pressure gauge cover 15 degree opposite to the arrow to mount the pressure gauge.	—	—

Hexagon plug: Applicable for AR10 standard

Process	Procedure	Tools	Check item
Disassembly	① Remove the plug Insert the hexagon spanner to hexagon hole of hexagon plug. Rotate the plug counterclockwise to remove the plug.	Nominal hexagon spanner 4	—

Pressure gauge adapter, Plug assembly: Applicable for AR20～60 standard

Process	Procedure	Tools	Check item
Disassembly	① Remove the plug Insert the hexagon spanner to hexagon hole of hexagon plug. Rotate the plug counterclockwise to remove the plug.	Nominal hexagon spanner AR20～30 : 4 AR40～60 : 6	—
	② Remove the pressure gauge adapter Rotate two set screws counterclockwise with cross pointed driver to remove the pressure gauge and two set screws.	Cross pointed driver	—
Assembly	③ Confirm pressure gauge adapter has "O" ring. If not, mount "O" ring.	—	—
	④ Mount pressure gauge adapter. Rotate two screws clockwise by Phillips driver to fix pressure gauge adapter. See Check item for tightening torque of two screws.	Cross pointed driver (Torque driver)	Tightening torque: 0.3±0.05N·m
	⑤ Mount plug assembly. Insert hexagon spanner into hexagon hole on the plug and rotate clockwise to fix the plug. See Check item for tightening torque of two screws.	Nominal hexagon spanner AR20～30 : 4 AR40～60 : 6	Tightening torque: AR20,30: 0.6±0.05N·m AR40～60: 1.0±0.1N·m

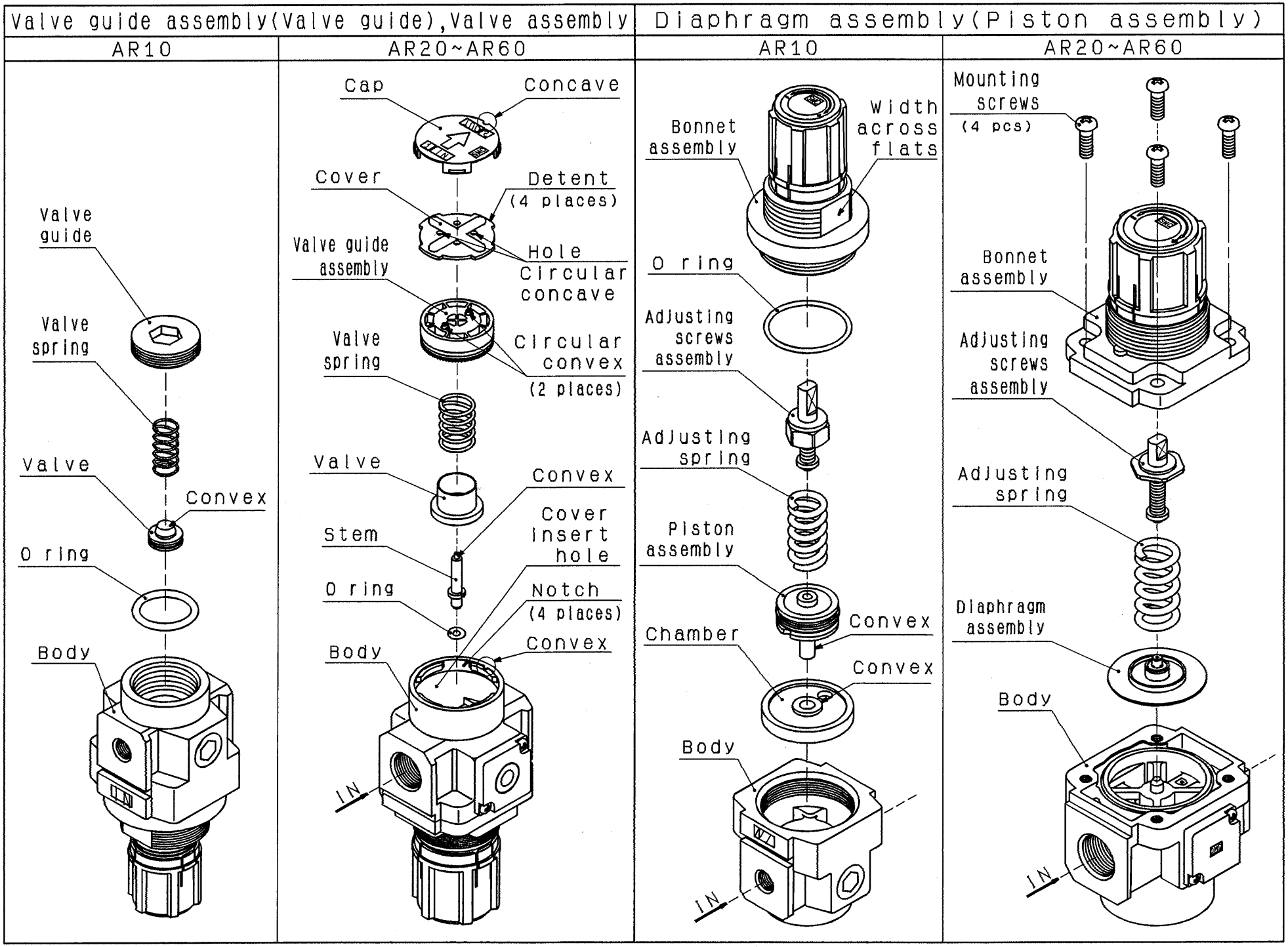
Valve guide assembly(Valve guide),Valve assembly
Diaphragm assembly(Piston assembly)
AR10
AR20~AR60
AR10
AR20~AR60
Valve guide
Valve spring
Valve
Convex
O ring
Body
Cap
Concave
Cover
Detent (4 places)
Valve guide assembly
Hole
Circular concave
Valve spring
Circular convex (2 places)
Valve
Convex
Cover insert hole
Stem
O ring
Notch (4 places)
Body
Convex
IN
Bonnet assembly
Width across flats
O ring
Adjusting screws assembly
Adjusting spring
Piston assembly
Chamber
Convex
Convex
Body
IN
Mounting screws (4 pcs)
Bonnet assembly
Adjusting screws assembly
Adjusting spring
Diaphragm assembly
Body
IN

Bracket, Panel	Pressure gauge, Pressure gauge adapter, Plug assembly	
AR10~AR40-06	AR10	AR20~AR60
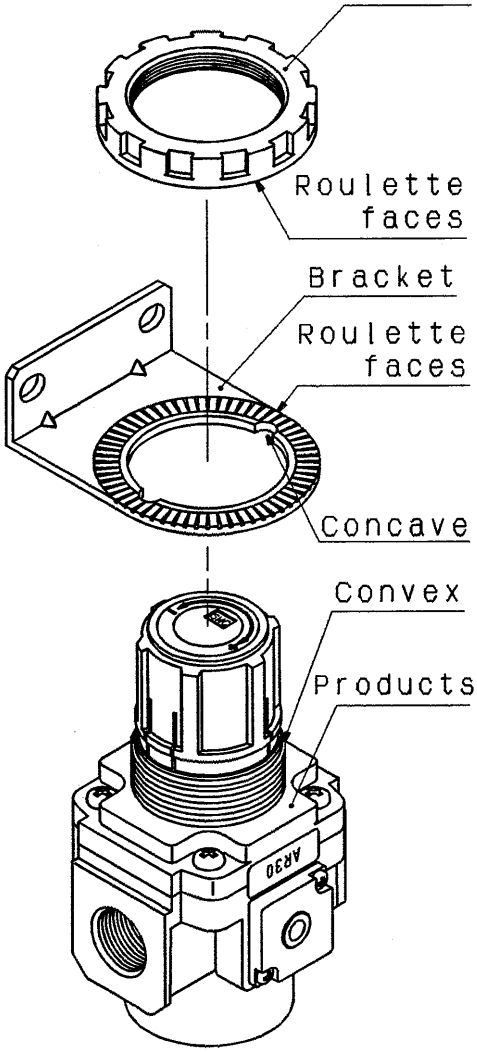	Circular pressure gauge 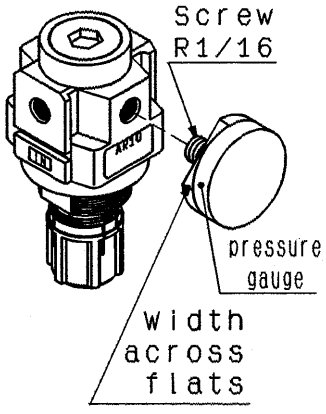	Circular pressure gauge 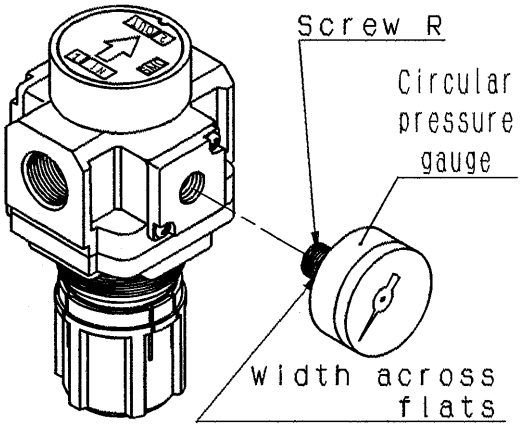
		Square embedded pressure gauge 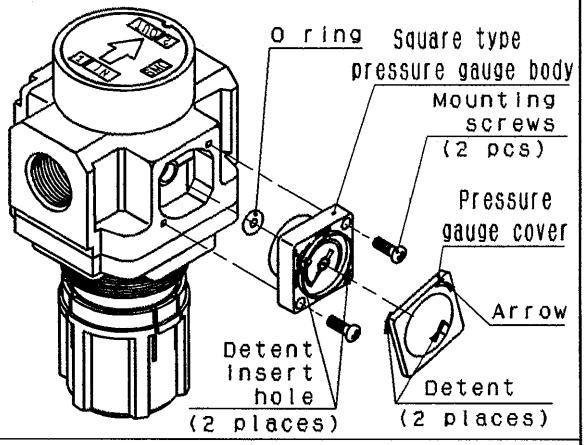
	Hexagon socket head cap plug 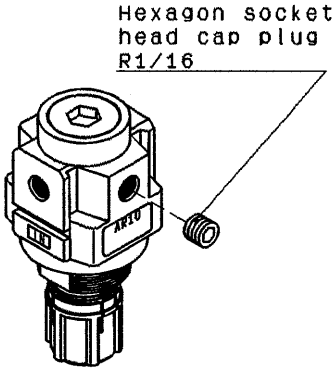	Pressure gauge adapter, Plug assembly 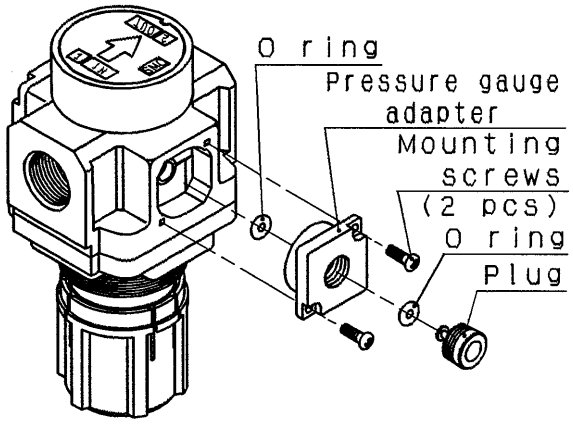

8. DIMENSIONS

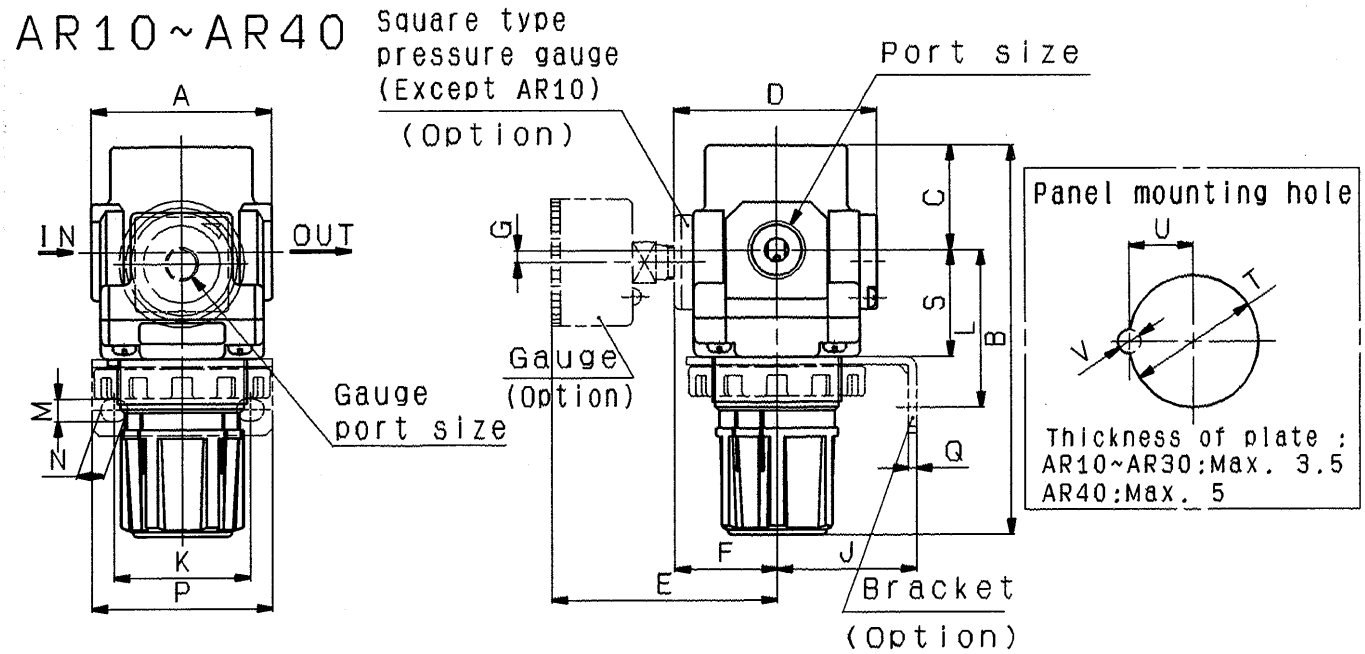

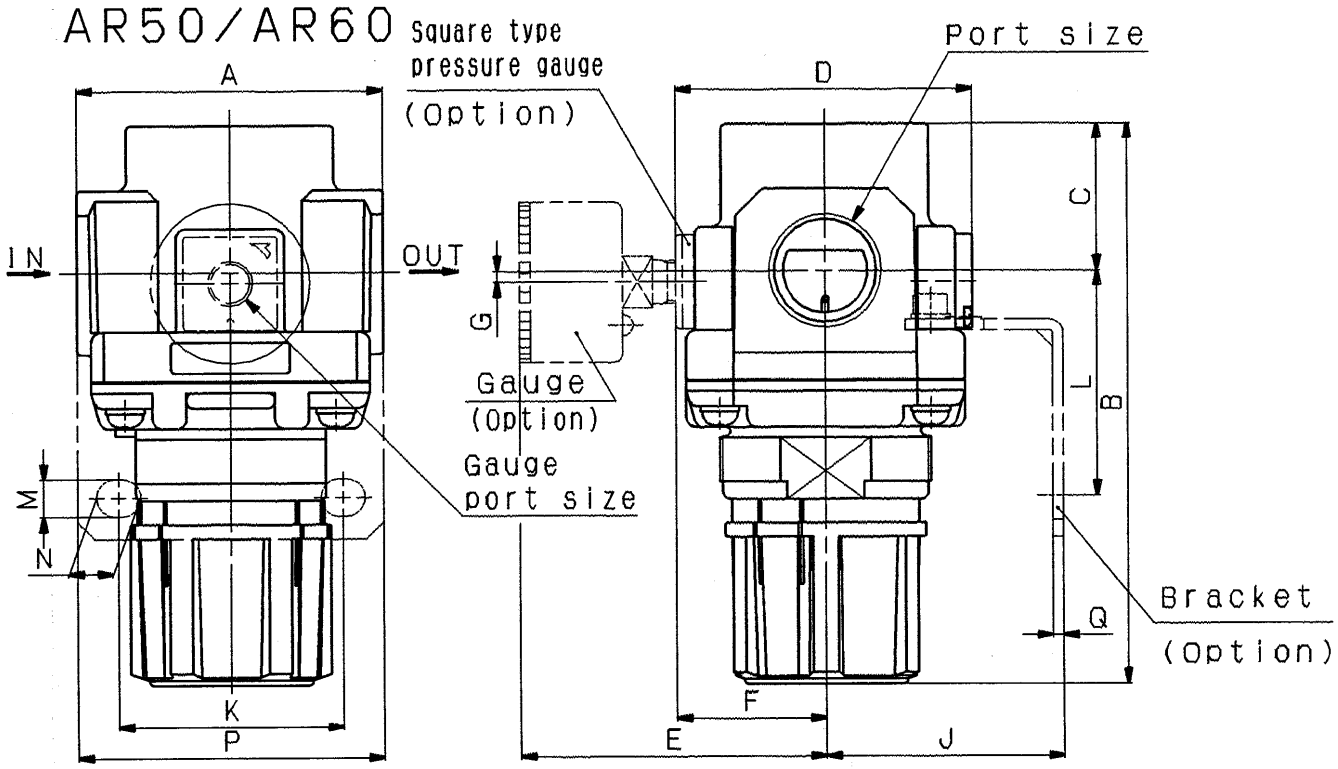

Dimensions

Model	Port size	Standard				Option													
						Pressure gauge			Bracket mounting dimensions							Panel mounting			
		A	B	C	D	E	F	G	J	K	L	M	N	P	Q	S	T	U	V
AR10	M5×0.8	25	58	11	25	26	—	0	25	28	30	4.5	6.5	40	2	18	18.5	—	—
AR20	1/8•1/4	40	94	26.5	57	65	29.5	Note) 2	30	34	44	5.4	15.4	55	2.3	25	28.5	14	6
AR25	1/4•3/8	53	101	28	55	64	28.5	0	30	34	44	5.4	15.4	55	2.3	26	32.5	16	6
AR30	1/4•3/8	53	116	31	59	66	30.5	3.5	41	40	46	6.5	8	53	2.3	31	38.5	19	7
AR40	1/4•3/8•1/2	70	128	36	68	74	35	3.5	50	54	54	8.5	10.5	70	2.3	35.5	42.5	21	7
AR40-06	3/4	75	129	36	68	74	35	3	50	54	56	8.5	10.5	70	2.3	37	42.5	21	7
AR50	3/4•1	90	169	43	87	84	44.5	3.3	70	66	65.8	11	13	90	3.2	—	—	—	—
AR60	1	95	176	46	87	84	44.5	3.3	70	66	65.8	11	13	90	3.2	—	—	—	—

Note) Pressure gauge mounting position is above piping center for AR20 only.