VXDS-TFR46

Installation and Maintenance Manual

VXD

Pilot Operated 2 Port Solenoid Valve

For Air, Water, Oil, Heated Water, High Temperature Oil

1 Safety Instructions

This manual contains essential information for the protection of users and others from possible injury and/or equipment damage.

- Read this manual before using the product, to ensure correct handling, and read the manuals of related apparatus before use.
- Keep this manual in a safe place for future reference.
- These instructions indicate the level of potential hazard by label of "Caution", "Warning" or "Danger", followed by important safety information which must be carefully followed.
- To ensure safety of personnel and equipment the safety instructions in this manual and the product catalogue must be observed, along with other relevant safety practices.

⚠ **Caution**	Indicates a hazard with a low level of risk, which if not avoided, could result in minor or moderate injury.
⚠ **Warning**	Indicates a hazard with a medium level of risk, which if not avoided, could result in death or serious injury.
⚠ **Danger**	Indicates a hazard with a high level of risk, which if not avoided, will result in death or serious injury.

⚠ Warning

- **The compatibility of equipment is the responsibility of the person who designs the system or decides its specifications.**
  Since the products specified here can be used in various operating conditions, their compatibility with a specific system must be based on specifications or after analysis and/or tests to meet specific requirements.
- **Only trained personnel should operate pneumatically operated machinery and equipment.**
  The fluid can be dangerous if an operator is unfamiliar with it. Assembly, handling or repair of the system should be performed by trained and experienced personnel.
- **Do not service machinery/equipment or attempt to remove components until safety is confirmed.**
  1) Inspection and maintenance of machinery/equipment should only be performed after confirmation of safe locked-out control positions. Measures to prevent danger from the fluid should also be taken.
  2) When equipment is to be removed, confirm the safety processes as mentioned above. Release the fluid pressure and be certain there is no danger from fluid leakage or fluid remaining in the system. Switch off electrical supplies.
  3) Before machinery/equipment is re-started, ensure all safety measures are being implemented.
- **Do not use this product outside of the specifications. Contact SMC if it is to be used in any of the following conditions:**
  1) Conditions and environments beyond the given specifications, or if the product is to be used outdoors.
  2) Installations in conjunction with atomic energy, railway, air navigation, vehicles, medical equipment, food and beverage, recreation equipment, emergency stop circuits, press applications, or safety equipment.
  3) An application which has the possibility of having negative effects on people, property, or animals, requiring special safety analysis.

⚠ Caution

- Ensure that the air supply system is filtered to 5 m.

2 Specifications

2.1 General Specifications

Valve specifications	Valve construction		Pilot operated 2 port diaphragm type
	Withstand pressure		2.0 MPa (Resin body type 1.5 MPa)
	Maximum system pressure		1.5 MPa
	Body material		Aluminium, Resin, Brass (C37), Stainless steel, Bronze casting (CAC407)
	Seal material		NBR, FKM, EPDM
	Enclosure		Dust-tight, Water jet-proof type (IP65)[Note 1)]
	Environment		Location without corrosive or explosive gases
Coil specifications	Rated voltage	AC	100 VAC, 200VAC, 110VAC, 230VAC, (220VAC, 240VAC, 48VAC, 24VAC)[Note 2)]
		DC	24 VDC, (12VDC)[Note 2)]
	Allowable voltage fluctuation		±10% of rated voltage
	Allowable leakage voltage	AC	5% or less of rated voltage
		DC	2% or less of rated voltage
	Coil insulation type		Class B, Class H

Note 1) Electrical entry, "Faston" type terminal is IP40.
Note 2) Voltage in brackets ( ) indicates special voltage.

2.2 Solenoid Coil Specifications

2.2.1 Normally Closed (N.C.)

DC Specification

Class B

Model	Power consumption (W) Note 1)	Temperature rise (°C) Note 2)
VXD23 to 25	4.5	50
VXD26, 27	7	55
VXD28, 29	10.5	65

Class H

Model	Power consumption (W) Note 1)	Temperature rise (°C) Note 2)
VXD23 to 25	9	100
VXD26, 27	12	100
VXD28, 29	15	100

Note 1) Power consumption: The value at ambient temperature of 20°C and when the rated voltage is applied. (Variation: ±10%).
Note 2) The value at ambient temperature of 20°C and when the rated voltage is applied. The value depends on the ambient environment. This is for reference.

2.2.2 Normally Open (N.O.)

DC Specification

Class B

Model	Power consumption (W) Note 1)	Temperature rise (°C) Note 2)
VXD2A to 2C	7.5	60
VXD2D, 2E	8.5	70
VXD2F, 2G	12.5	70

Class H

Model	Power consumption (W) Note 1)	Temperature rise (°C) Note 2)
VXD2A to 2C	9	100
VXD2D, 2E	12	100
VXD2F, 2G	15	100

Note 1) Power consumption: The value at ambient temperature of 20°C and when the rated voltage is applied. (Variation: ±10%).
Note 2) The value at ambient temperature of 20°C and when the rated voltage is applied. The value depends on the ambient environment. This is for reference.

2 Specifications (continued)

2.2.3 Normally Closed (N.C.)

AC Specification (Built-in Full-wave Rectifier Type)

Class B

Model	Apparent Power (VA) Note 1, 2)	Temperature rise (°C) Note 3)
VXD23 to 25	7	60
VXD26, 27	9.5	70
VXD28, 29	12	70

Class H

Model	Apparent Power (VA) Note 1, 2)	Temperature rise (°C) Note 3)
VXD23 to 25	9	100
VXD26, 27	12	100
VXD28, 29	15	100

Note 1) Power consumption, Apparent power: The value at ambient temperature of 20°C and when the rated voltage is applied. (Variation: ±10%).
Note 2) There is no difference in the frequency and the inrush and energized apparent power, since a rectifying circuit is used in the AC.
Note 3) The value at ambient temperature of 20°C and when the rated voltage is applied. The value depends on the ambient environment. This is for reference.

2.2.4 Normally Open (N.O.)

AC Specification (Built-in Full-wave Rectifier Type)

Class B

Model	Apparent Power (VA) Note 1, 2)	Temperature rise (°C) Note 3)
VXD2A to 2C	9	60
VXD2D, 2E	10	70
VXD2F, 2G	14	70

Class H

Model	Apparent Power (VA) Note 1, 2)	Temperature rise (°C) Note 3)
VXD2A to 2C	9	100
VXD2D, 2E	12	100
VXD2F, 2G	15	100

Note 1) Power consumption, Apparent power: The value at ambient temperature of 20°C and when the rated voltage is applied. (Variation: ±10%)
Note 2) There is no difference in the frequency and the inrush and energized apparent power, since a rectifying circuit is used in the AC.
Note 3) The value at ambient temperature of 20°C and when the rated voltage is applied. The value depends on the ambient environment. This is for reference.

2.3 Model/Valve specifications

2.3.1 For AIR / Single Unit

2.3.1.1 Normally closed (N.C.)

Resin body type (Built-in One-touch fittings)

Port Size	Orifice Dia. (mm)	Model	Min. operating pressure differential (MPa) Note 1)	Max. operating pressure differential (MPa)		Flow characteristics			Wt. Note 2) (g)
				AC	DC	C [dm³/(s.bar)]	b	Cv	
Ø10	10	VXD230	0.02	0.9	0.7	5.6	0.33	1.3	330
Ø3/8"						4.8		0.9	
Ø12						7.2		1.5	

Aluminium body type

Port Size	Orifice Dia. (mm)	Model	Min. operating pressure differential (MPa) Note 1)	Max. operating pressure differential (MPa)		Flow characteristics			Wt. Note 2) (g)
				AC	DC	C [dm³/(s.bar)]	b	Cv	
1/4	10	VXD230	0.02	0.9	0.7	8.5	0.35	2.0	370
3/8						9.2		2.4	
1/2						9.2		2.4	

2 Specifications (continued)

C37, Stainless steel body type

Port Size	Orifice Dia. (mm)	Model	Min. operating pressure differential (MPa) Note 1)	Max. operating pressure differential (MPa)		Flow characteristics			Wt. Note 2) (g)
				AC	DC	C [dm³/(s.bar)]	B	Cv	
3/8	15	VXD240	0.02	1.0	1.0	18.0	0.35	5.0	720
1/2						20.0		5.5	
3/4	20	VXD250				38.0	0.30	9.5	840
1	25	VXD260				*(Effective area: 225mm²)*			1360

CAC407 type – Flange type

Port Size	Orifice Dia. (mm)	Model	Min. operating pressure differential (MPa) Note 1)	Max. operating pressure differential (MPa)		Flow characteristics	Wt. Note 2) (g)
				AC	DC	Effective area	
32A	35	VXD270	0.03	1.0	1.0	415	5400
40A	40	VXD280				560	6800
50A	50	VXD290				880	8400

Note 1) Be aware that even if the pressure difference is above the minimum operating pressure differential when the valve is closed, the pressure difference may fall below the minimum operating pressure differential when the valve opens, depending on the power supply of the supply source (pumps, compressors, etc.) or the type of pipe restrictions.
Note 2) Weight of grommet type. Add 10g for Conduit type, 30g for DIN terminal type, 60g for Conduit terminal type.

Ambient and fluid temperature

Fluid temperature (°C)	Ambient temperature (°C)
-10[Note)] to 60	-20 to 60

Note) Dew point temperature: –10°C or less.

Valve Internal Leakage Rate

Seal Material	Leakage rate (Air)[Note)]	
	VXD23 to 26	VXD27 to 29
NBR (FKM)	15 cm³/min or less (Aluminium body type)	10 cm³/min or less
	15 cm³/min or less (Resin body type)	
	2 cm³/min or less (C37/SUS body type)	

Valve External Leakage Rate

Seal Material	Leakage rate (Air)[Note)]	
	VXD23 to 26	VXD27 to 29
NBR (FKM)	15 cm³/min or less (Aluminium body type)	1 cm³/min or less
	15 cm³/min or less (Resin body type)	
	1 cm³/min or less (C37/SUS body type)	

Note) Leakage is the value at ambient temperature 20°C.

2.3.1.2 Normally open (N.O.)

Resin body type (Built-in One-touch fittings)

Port Size	Orifice Dia. (mm)	Model	Min. operating pressure differential (MPa) Note 1)	Max. operating pressure differential (MPa)		Flow characteristics			Wt. Note 2) (g)
				AC	DC	C [dm³/(s.bar)]	b	Cv	
Ø10	10	VXD2A0	0.02	0.6	0.4	5.6	0.33	1.3	350
Ø3/8"						4.8		0.9	
Ø12						7.2		1.5	

Aluminium body type

Port Size	Orifice Dia. (mm)	Model	Min. operating pressure differential (MPa) Note 1)	Max. operating pressure differential (MPa)		Flow characteristics			Wt. Note 2) (g)
				AC	DC	C [dm³/(s.bar)]	b	Cv	
1/4	10	VXD2A0	0.02	0.6	0.4	8.5	0.35	2.0	390
3/8						9.2		2.4	
1/2						9.2		2.4	

2 Specifications (continued)

C37, Stainless steel body type

Port Size	Orifice Dia. (mm)	Model	Min. operating pressure differential (MPa) Note 1)	Max. operating pressure differential (MPa)		Flow characteristics			Wt. Note 2) (g)
				AC	DC	C [dm³/(s.bar)]	B	Cv	
3/8	15	VXD2B0	0.02	0.7	0.7	18.0	0.35	5.0	740
1/2						20.0		5.5	
3/4	20	VXD2C0				38.0	0.30	9.5	860
1	25	VXD2D0				*(Effective area: 225mm²)*			1390

CAC407 type – Flange type

Port Size	Orifice Dia. (mm)	Model	Min. operating pressure differential (MPa) Note 1)	Max. operating pressure differential (MPa)		Flow characteristics	Wt. Note 2) (g)
				AC	DC	Effective area	
32A	35	VXD2E0	0.03	0.7	0.7	415	5430
40A	40	VXD2F0				560	6840
50A	50	VXD2G0				880	8440

Note 1) Be aware that even if the pressure difference is above the minimum operating pressure differential when the valve is closed, the pressure difference may fall below the minimum operating pressure differential when the valve opens, depending on the power supply of the supply source (pumps, compressors, etc.) or the type of pipe restrictions.
Note 2) Weight of grommet type. Add 10g for Conduit type, 30g for DIN terminal type, 60g for Conduit terminal type.

Ambient and fluid temperature

Fluid temperature (°C)	Ambient temperature (°C)
-10 Note) to 60	-20 to 60

Note) Dew point temperature: –10°C or less.

Valve Internal Leakage Rate

Seal Material	Leakage rate (Air) Note)	
	VXD2A to 2D	VXD2E to 2G
NBR (FKM)	15 cm³/min or less (Aluminium body type)	10 cm³/min or less
	15 cm³/min or less (Resin body type)	
	2 cm³/min or less (C37/SUS body type)	

Valve External Leakage Rate

Seal Material	Leakage rate (Air) Note)	
	VXD2A to 2D	VXD2E to 2G
NBR (FKM)	15 cm³/min or less (Aluminium body type)	1 cm³/min or less
	15 cm³/min or less (Resin body type)	
	1 cm³/min or less (C37/SUS body type)	

Note) Leakage is the value at ambient temperature 20°C.

2.3.2 For WATER / Single Unit

2.3.2.1 Normally closed (N.C.)

C37, Stainless steel body type

Port Size	Orifice Dia. (mm)	Model	Min. operating pressure differential (MPa) Note 1)	Max. operating pressure differential (MPa)		Flow characteristics		Wt. Note 2) (g)
				AC	DC	Av (x 10⁻⁶ m²)	Conversion Cv	
1/4	10	VXD232	0.02	0.7	0.5	46	1.9	480
3/8						58	2.4	
1/2								
3/8	15	VXD242		1.0	1.0	110	4.5	720
1/2						130	5.5	
3/4	20	VXD252				230	9.5	840
1	25	VXD262				310	13	1360

CAC407 type – Flange type

Port Size	Orifice Dia. (mm)	Model	Min. operating pressure differential (MPa) Note 1)	Max. operating pressure differential (MPa)		Flow characteristics		Wt. Note 2) (g)
				AC	DC	Av (x 10⁻⁶ m²)	Conversion Cv	
32A	35	VXD272	0.03	1.0	1.0	550	23	5400
40A	40	VXD282				740	31	6800
50A	50	VXD292				1200	49	8400

Note 1) Be aware that even if the pressure difference is above the minimum operating pressure differential when the valve is closed, the pressure difference may fall below

2 Specifications (continued)

the minimum operating pressure differential when the valve opens, depending on the power supply of the supply source (pumps, compressors, etc.) or the type of pipe restrictions.
Note 2) Weight of grommet type. Add 10g for Conduit type, 30g for DIN terminal type, 60g for Conduit terminal type.

Ambient and fluid temperature

Fluid temperature (°C)	Ambient temperature (°C)
1 to 60	-20 to 60

Note) With no freezing.

Valve Internal Leakage Rate

Seal Material	Leakage rate (Water) Note)	
	VXD23 to 26	VXD27 to 29
NBR (FKM)	0.2 cm³/min or less	1 cm³/min or less

Valve External Leakage Rate

Seal Material	Leakage rate (Water) Note)	
	VXD23 to 26	VXD27 to 29
NBR (FKM)	0.1 cm³/min or less	0.1 cm³/min or less

Note) Leakage is the value at ambient temperature 20°C.

2.3.2.2 Normally open (N.O.)

C37, Stainless steel body type

Port Size	Orifice Dia. (mm)	Model	Min. operating pressure differential (MPa) Note 1)	Max. operating pressure differential (MPa)		Flow characteristics		Wt. Note 2) (g)
				AC	DC	Av (x 10⁻⁶ m²)	Conversion Cv	
1/4	10	VXD2A2	0.02	0.4	0.3	46	1.9	500
3/8						58	2.4	
1/2								
3/8	15	VXD2B2		0.7	0.7	110	4.5	740
1/2						130	5.5	
3/4	20	VXD2C2				230	9.5	860
1	25	VXD2D2				310	13	1390

Valve Internal Leakage Rate

Seal Material	Leakage rate (Air) Note)	
	VXD2A to 2D	VXD2E to 2G
NBR (FKM)	15 cm³/min or less (Aluminium body type)	10 cm³/min or less
	15 cm³/min or less (Resin body type)	
	2 cm³/min or less (C37/SUS body type)	

Valve External Leakage Rate

Seal Material	Leakage rate (Air) Note)	
	VXD2A to 2D	VXD2E to 2G
NBR (FKM)	15 cm³/min or less (Aluminium body type)	1 cm³/min or less
	15 cm³/min or less (Resin body type)	
	1 cm³/min or less (C37/SUS body type)	

Note) Leakage is the value at ambient temperature 20°C.

CAC407 type – Flange type

Port Size	Orifice Dia. (mm)	Model	Min. operating pressure differential (MPa) Note 1)	Max. operating pressure differential (MPa)		Flow characteristics		Wt. Note 2) (g)
				AC	DC	Av (x 10⁻⁶ m²)	Conversion Cv	
32A	35	VXD2E2	0.03	0.7	0.7	550	23	5430
40A	40	VXD2F2				740	31	6840
50A	50	VXD2G2				1200	49	8440

Note 1) Be aware that even if the pressure difference is above the minimum operating pressure differential when the valve is closed, the pressure difference may fall below the minimum operating pressure differential when the valve opens, depending on the power supply of the supply source (pumps, compressors, etc.) or the type of pipe restrictions.
Note 2) Weight of grommet type. Add 10g for Conduit type, 30g for DIN terminal type, 60g for Conduit terminal type.

Ambient and fluid temperature

Fluid temperature (°C)	Ambient temperature (°C)
1 to 60	-20 to 60

Note) With no freezing.

Valve Internal Leakage Rate

Seal Material	Leakage rate (Water) Note)	
	VXD2A to 2D	VXD2E to 2G
NBR (FKM)	0.2 cm³/min or less	1 cm³/min or less

Valve External Leakage Rate

Seal Material	Leakage rate (Water) Note)	
	VXD2A to 2D	VXD2E to 2G
NBR (FKM)	0.1 cm³/min or less	0.1 cm³/min or less

Note) Leakage is the value at ambient temperature 20°C.

2 Specifications (continued)

2.3.3 For OIL / Single Unit

2.3.3.1 Normally closed (N.C.)

C37, Stainless steel body type

Port Size	Orifice Dia. (mm)	Model	Min. operating pressure differential (MPa) Note 1)	Max. operating pressure differential (MPa)		Flow characteristics		Wt. Note 2) (g)
				AC	DC	Av (x 10⁻⁶ m²)	Conversion Cv	
1/4	10	VXD233	0.02	0.5	0.4	46	1.9	480
3/8						58	2.4	
1/2								
3/8	15	VXD243		0.7	0.7	110	4.5	720
1/2						130	5.5	
3/4	20	VXD253				230	9.5	840
1	25	VXD263				310	13	1360

CAC407 type – Flange type

Port Size	Orifice Dia. (mm)	Model	Min. operating pressure differential (MPa) Note 1)	Max. operating pressure differential (MPa)		Flow characteristics		Wt. Note 2) (g)
				AC	DC	Av (x 10⁻⁶ m²)	Conversion Cv	
32A	35	VXD273	0.03	0.7	0.7	550	23	5400
40A	40	VXD283				740	31	6800
50A	50	VXD293				1200	49	8400

Note 1) Be aware that even if the pressure difference is above the minimum operating pressure differential when the valve is closed, the pressure difference may fall below the minimum operating pressure differential when the valve opens, depending on the power supply of the supply source (pumps, compressors, etc.) or the type of pipe restrictions.
Note 2) Weight of grommet type. Add 10g for Conduit type, 30g for DIN terminal type, 60g for Conduit terminal type.

Ambient and fluid temperature

Fluid temperature (°C)	Ambient temperature (°C)
-5 Note) to 60	-20 to 60

Note) Kinematic viscosity: 50 mm²/s or less.

Valve Internal Leakage Rate

Seal Material	Leakage rate (Oil) Note)	
	VXD23 to 26	VXD27 to 29
FKM	0.2 cm³/min or less	1 cm³/min or less

Valve External Leakage Rate

Seal Material	Leakage rate (Oil) Note)	
	VXD23 to 26	VXD27 to 29
FKM	0.1 cm³/min or less	0.1 cm³/min or less

Note) Leakage is the value at ambient temperature 20°C.

2.3.3.2 Normally open (N.O.)

C37, Stainless steel body type

Port Size	Orifice Dia. (mm)	Model	Min. operating pressure differential (MPa) Note 1)	Max. operating pressure differential (MPa)		Flow characteristics		Wt. Note 2) (g)
				AC	DC	Av (x 10⁻⁶ m²)	Conversion Cv	
1/4	10	VXD2A3	0.02	0.4	0.3	46	1.9	500
3/8						58	2.4	
1/2								
3/8	15	VXD2B3		0.6	0.6	110	4.5	740
1/2						130	5.5	
3/4	20	VXD2C3				230	9.5	860
1	25	VXD2D3				310	13	1390

CAC407 type – Flange type

Port Size	Orifice Dia. (mm)	Model	Min. operating pressure differential (MPa) Note 1)	Max. operating pressure differential (MPa)		Flow characteristics		Wt. Note 2) (g)
				AC	DC	Av (x 10⁻⁶ m²)	Conversion Cv	
32A	35	VXD2E3	0.03	0.6	0.6	550	23	5430
40A	40	VXD2F3				740	31	6840
50A	50	VXD2G3				1200	49	8440

Note 1) Be aware that even if the pressure difference is above the minimum operating pressure differential when the valve is closed, the pressure difference may fall below the minimum operating pressure differential when the valve opens, depending on the power supply of the supply source (pumps, compressors, etc.) or the type of pipe restrictions.
Note 2) Weight of grommet type. Add 10g for Conduit type, 30g for DIN 23terminal type, 60g for Conduit terminal type.

2 Specifications (continued)

Ambient and fluid temperature

Fluid temperature (°C)	Ambient temperature (°C)
-5 Note) to 60	-20 to 60

Note) Kinematic viscosity: 50 mm²/s or less.

Valve Internal Leakage Rate

Seal Material	Leakage rate (Oil) Note)	
	VXD2A to 2D	VXD2E to 2G
FKM	0.2 cm³/min or less	1 cm³/min or less

Valve External Leakage Rate

Seal Material	Leakage rate (Oil) Note)	
	VXD2A to 2D	VXD2E to 2G
FKM	0.1 cm³/min or less	0.1 cm³/min or less

Note) Leakage is the value at ambient temperature 20°C.

2.3.4 For HEATED WATER / Single Unit

2.3.4.1 Normally closed (N.C.)

C37, Stainless steel body type

Port Size	Orifice Dia. (mm)	Model	Min. operating pressure differential (MPa) Note 1)	Max. operating pressure differential (MPa)		Flow characteristics		Wt. Note 2) (g)
				AC	DC	Av (x 10⁻⁶ m²)	Conversion Cv	
1/4	10	VXD235	0.02	0.7	0.5	46	1.9	480
3/8						58	2.4	
1/2								
3/8	15	VXD245		1.0	1.0	110	4.5	720
1/2						130	5.5	
3/4	20	VXD255				230	9.5	840
1	25	VXD265				310	13	1360

CAC407 type – Flange type

Port Size	Orifice Dia. (mm)	Model	Min. operating pressure differential (MPa) Note 1)	Max. operating pressure differential (MPa)		Flow characteristics		Wt. Note 2) (g)
				AC	DC	Av (x 10⁻⁶ m²)	Conversion Cv	
32A	35	VXD275	0.03	1.0	1.0	550	23	5400
40A	40	VXD285				740	31	6800
50A	50	VXD295				1200	49	8400

Note 1) Be aware that even if the pressure difference is above the minimum operating pressure differential when the valve is closed, the pressure difference may fall below the minimum operating pressure differential when the valve opens, depending on the power supply of the supply source (pumps, compressors, etc.) or the type of pipe restrictions.
Note 2) Weight of grommet type. Add 10g for Conduit type, 30g for DIN terminal type, 60g for Conduit terminal type.

Ambient and fluid temperature

Fluid temperature (°C)	Ambient temperature (°C)
1 to 99	-20 to 60

Note) With no freezing.

Valve Internal Leakage Rate

Seal Material	Leakage rate (Water) Note)	
	VXD23 to 26	VXD27 to 29
EPDM	0.2 cm³/min or less	1 cm³/min or less

Valve External Leakage Rate

Seal Material	Leakage rate (Water) Note)	
	VXD23 to 26	VXD27 to 29
EPDM	0.1 cm³/min or less	0.1 cm³/min or less

Note) Leakage is the value at ambient temperature 20°C.

2 Specifications (continued)

2.3.4.2 Normally open (N.O.)

C37, Stainless steel body type

Port Size	Orifice Dia. (mm)	Model	Min. operating pressure differential (MPa) Note 1)	Max. operating pressure differential (MPa) AC	Max. operating pressure differential (MPa) DC	Flow characteristics Av (x 10^{-6} m^2)	Flow characteristics Conversion Cv	Wt. Note 2) (g)
1/4	10	VXD2A5	0.02	0.4	0.3	46	1.9	500
3/8						58	2.4	
1/2								
3/8	15	VXD2B5		0.7	0.7	110	4.5	740
1/2						130	5.5	
3/4	20	VXD2C5				230	9.5	860
1	25	VXD2D5				310	13	1390

CAC407 type – Flange type

Port Size	Orifice Dia. (mm)	Model	Min. operating pressure differential (MPa) Note 1)	Max. operating pressure differential (MPa) AC	Max. operating pressure differential (MPa) DC	Flow characteristics Av (x 10^{-6} m^2)	Flow characteristics Conversion Cv	Wt. Note 2) (g)
32A	35	VXD2E5	0.03	0.7	0.7	550	23	5430
40A	40	VXD2F5				740	31	6840
50A	50	VXD2G5				1200	49	8440

Note 1) Be aware that even if the pressure difference is above the minimum operating pressure differential when the valve is closed, the pressure difference may fall below the minimum operating pressure differential when the valve opens, depending on the power supply of the supply source (pumps, compressors, etc.) or the type of pipe restrictions.
Note 2) Weight of grommet type. Add 10g for Conduit type, 30g for DIN terminal type, 60g for Conduit terminal type.

Ambient and fluid temperature

Fluid temperature (°C)	Ambient temperature (°C)
1 to 99	-20 to 60

Note) With no freezing.

Valve Internal Leakage Rate

Seal Material	Leakage rate (Water)Note)	
	VXD2A to 2D	VXD2E to 2G
EPDM	0.2 cm^3/min or less	1 cm^3/min or less

Valve External Leakage Rate

Seal Material	Leakage rate (Water)Note)	
	VXD2A to 2D	VXD2E to 2G
EPDM	0.1 cm^3/min or less	0.1 cm^3/min or less

Note) Leakage is the value at ambient temperature 20°C.

2.3.5 For HIGH TEMPERATURE OIL / Single Unit

2.3.5.1 Normally closed (N.C.)

C37, Stainless steel body type

Port Size	Orifice Dia. (mm)	Model	Min. operating pressure differential (MPa) Note 1)	Max. operating pressure differential (MPa) AC	Max. operating pressure differential (MPa) DC	Flow characteristics Av (x 10^{-6} m^2)	Flow characteristics Conversion Cv	Wt. Note 2) (g)
1/4	10	VXD236	0.02	0.5	0.4	46	1.9	480
3/8						58	2.4	
1/2								
3/8	15	VXD246		0.7	0.7	110	4.5	720
1/2						130	5.5	
3/4	20	VXD256				230	9.5	840
1	25	VXD266				310	13	1360

CAC407 type – Flange type

Port Size	Orifice Dia. (mm)	Model	Min. operating pressure differential (MPa) Note 1)	Max. operating pressure differential (MPa) AC	Max. operating pressure differential (MPa) DC	Flow characteristics Av (x 10^{-6} m^2)	Flow characteristics Conversion Cv	Wt. Note 2) (g)
32A	35	VXD276	0.03	0.7	0.7	550	23	5400
40A	40	VXD28				740	31	6800
50A	50	VXD296				1200	49	8400

Note 1) Be aware that even if the pressure difference is above the minimum operating pressure differential when the valve is closed, the pressure difference may fall below the minimum operating pressure differential when the valve opens, depending on the power supply of the supply source (pumps, compressors, etc.) or the type of pipe restrictions.

2 Specifications (continued)

Note 2) Weight of grommet type. Add 10g for Conduit type, 30g for DIN terminal type, 60g for Conduit terminal type.

Ambient and fluid temperature

Fluid temperature (°C)	Ambient temperature (°C)
-5Note) to 100	-20 to 60

Note) Kinematic viscosity: 50 mm^2/s or less.

Valve Internal Leakage Rate

Seal Material	Leakage rate (Oil)Note)	
	VXD23 to 26	VXD27 to 29
FKM	0.2 cm^3/min or less	1 cm^3/min or less

Valve External Leakage Rate

Seal Material	Leakage rate (Oil)Note)	
	VXD23 to 26	VXD27 to 29
FKM	0.1 cm^3/min or less	0.1 cm^3/min or less

Note) Leakage is the value at ambient temperature 20°C.

2.3.5.2 Normally open (N.O.)

C37, Stainless steel body type

Port Size	Orifice Dia. (mm)	Model	Min. operating pressure differential (MPa) Note 1)	Max. operating pressure differential (MPa) AC	Max. operating pressure differential (MPa) DC	Flow characteristics Av (x 10^{-6} m^2)	Flow characteristics Conversion Cv	Wt. Note 2) (g)
1/4	10	VXD2A6	0.02	0.4	0.3	46	1.9	500
3/8						58	2.4	
1/2								
3/8	15	VXD2B6		0.6	0.6	110	4.5	740
1/2						130	5.5	
3/4	20	VXD2C6				230	9.5	860
1	25	VXD2D6				310	13	1390

CAC407 type – Flange type

Port Size	Orifice Dia. (mm)	Model	Min. operating pressure differential (MPa) Note 1)	Max. operating pressure differential (MPa) AC	Max. operating pressure differential (MPa) DC	Flow characteristics Av (x 10^{-6} m^2)	Flow characteristics Conversion Cv	Wt. Note 2) (g)
32A	35	VXD2E6	0.03	0.6	0.6	550	23	5430
40A	40	VXD2F6				740	31	6840
50A	50	VXD2G6				1200	49	8440

Note 1) Be aware that even if the pressure difference is above the minimum operating pressure differential when the valve is closed, the pressure difference may fall below the minimum operating pressure differential when the valve opens, depending on the power supply of the supply source (pumps, compressors, etc.) or the type of pipe restrictions.
Note 2) Weight of grommet type. Add 10g for Conduit type, 30g for DIN 23terminal type, 60g for Conduit terminal type.

Ambient and fluid temperature

Fluid temperature (°C)	Ambient temperature (°C)
-5Note) to 100	-20 to 60

Note) Kinematic viscosity: 50 mm^2/s or less.

Valve Internal Leakage Rate

Seal Material	Leakage rate (Oil)Note)	
	VXD2A to 2D	VXD2E to 2G
FKM	0.2 cm^3/min or less	1 cm^3/min or less

Valve External Leakage Rate

Seal Material	Leakage rate (Oil)Note)	
	VXD2A to 2D	VXD2E to 2G
FKM	0.1 cm^3/min or less	0.1 cm^3/min or less

Note) Leakage is the value at ambient temperature 20°C.

2 Specifications (continued)

2.4 Pneumatic Symbol

2.4.1 Valve

Valve	Symbol
Normally closed (N.C.)	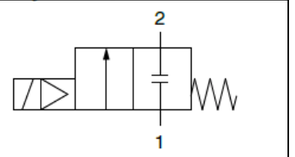
Normally open (N.O.)	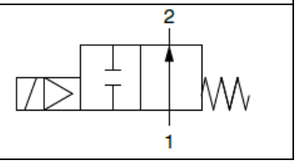

Table 1

3 Installation

Warning

- Do not install the product unless the safety instructions have been read and understood.

3.1 VXD Valve Mounting Bracket

3.1.1 Resin body – One touch fittings

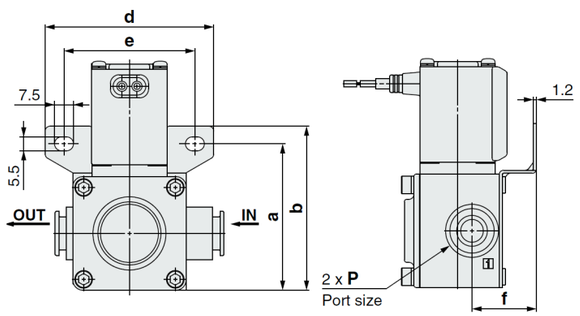

Figure 1

Model	One-touch Fitting P	Bracket Mounting (mm) a	b	d	e	f
VXD2(3,A)	Ø10, Ø3/8", Ø12	58	65	67	52	25.5

Table 2

- Bracket comes with resin body type as standard. Cannot order separately.

3 Installation (continued)

3.1.2 Aluminium, C37, Stainless steel body (Bracket optional)

3.1.2.1 VXD2(3,A)

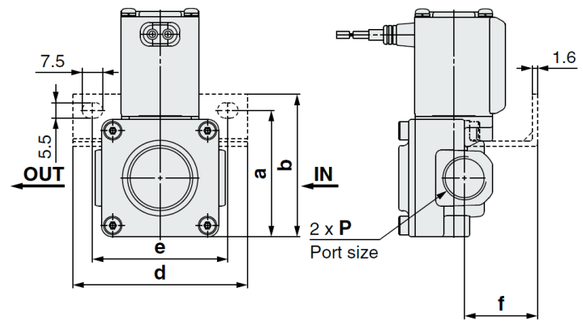

Figure 2

Model	Port size P	Bracket Mounting (mm) a	b	d	e	f
VXD2(3,A)	1/4, 3/8	48.5	55	67	52	28
	1/2	47	53.5			27

Table 3

3.1.2.2 VXD2(4,B)/(5,C)/(6,D)

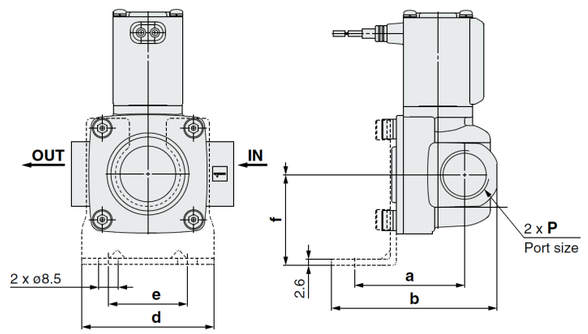

Figure 3

Model	Port size P	Bracket Mounting (mm) a	b	d	e	f
VXD2(4,B)	3/8, 1/2	47.5	71.5	57	34	39
VXD2(5,C)	3/4	50.5	77.5	74	51	45.5
VXD2(6,D)	1	55.5	85.5	81	58	49.5

Table 4

- For Aluminium, C37, SUS body, bracket is an option and can be ordered separately.
- Please see product catalogue for restrictions on bracket availability.

3 Installation (continued)

3.2 Environment

Warning

- Do not use in an environment where corrosive gases, chemicals, salt water or steam are present or where there is direct contact with any of these.
- Do not use in an explosive atmosphere.
- Do not expose to direct sunlight. Use a suitable protective cover.
- Do not install in a location subject to vibration or impact. Check the product specifications.
- Do not mount in a location exposed to radiant heat.
- Employ suitable protective measures in locations where there is contact with water droplets, oil or welding splatter, etc.

3.3 Piping

Caution

- Before connecting piping, it should be thoroughly blown out with air (flushed) or washed to remove chips, cutting oil and other debris from inside the pipe.
- Avoid connecting ground lines to piping, as this may cause electrolytic corrosion of the system.
- When installing piping or fittings, ensure sealant material does not enter inside the port. When using seal tape, leave 1.5 to 2 threads exposed on the end of the pipe/fitting.
- Tighten fittings to the specified tightening torque.
- Install piping so that it does not apply pulling, pressing, bending or other forces on the valve body.
- When connecting piping, avoid mistakes regarding the supply port.
- In applications such as vacuum and non-leak specifications, use caution against contamination of foreign objects and air tightness of fittings.
- Do not directly connect a regulator and valve together, as they may vibrate together and cause chattering.
- If the effective area of the piping on the fluid supply side is restricted, the operating time may become unstable due to the differential pressure fluctuation when the valve is closed.

Thread	Tightening Torque N•m
Rc 1/4	12 to 14
Rc 3/8	22 to 24
Rc 1/2	28 to 30
Rc 3/4	28 to 30
Rc 1	36 to 38

Table 5

3.3.1 Valve Ports

3.3.1.1 Aluminium, C37, Stainless steel body

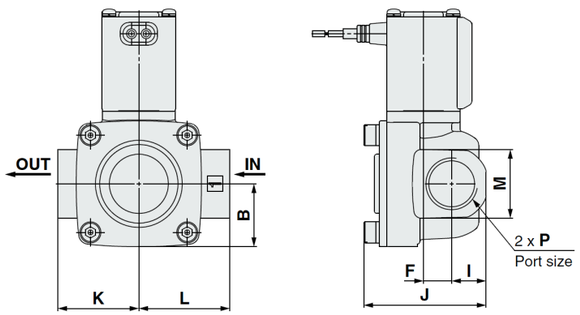

Figure 4

3 Installation (continued)

Model	Port size P (Rc)	Valve Ports (mm) Note)						
		B	F	I	J	K	L	M
VXD2(3,A)	1/4, 3/8	22.5	4.5	11	37.5	25	25	22 (24)
	1/2		5	13	42.5			27 (30)
VXD2(4,B)	3/8, 1/2	25.5	11.5	14	50	33	37	28
VXD2(5,C)	3/4	29	4.5	17	51	32.5	38.5	35
VXD2(6,D)	1	33		20	59.5	45.5	49.5	42

Note) Dimensions in brackets ( ) are for Aluminium body

Table 6

3.3.1.2 CAC407 body – Flange type

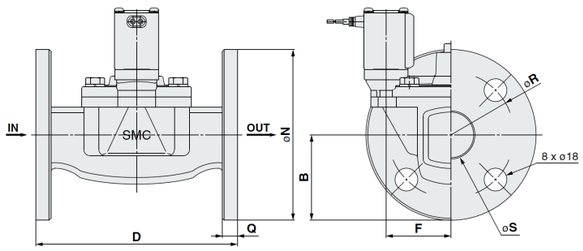

Figure 5

Model	Flange	Valve Ports (mm)						
		B	D	F	N	Q	R	S
VXD2(7,E)	32A	67.5	160	51.5	135	12	100	36
VXD2(8,F)	40A	70	170	54.5	140	14	105	42
VXD2(9,G)	50A	77.5	180	59	155	14	120	52

Table 7

3.3.1.3 Resin body – One touch fittings

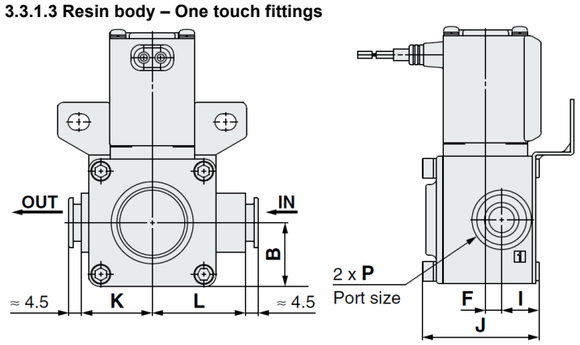

Figure 6

Model	One-touch Fitting P	Valve Ports (mm)					
		B	F	I	J	K	L
VXD2(3,A)	Ø10, Ø3/8", Ø12	22.5	6	13.5	41.5	25	33

Table 8

3.3.2 Precautions for One-touch fittings

3.3.2.1 Attaching of tube

- Use a tube having no flaws on its periphery and cut it off at a right angle.
- When cutting the tube use cutters TK-1, 2, or 3. Do not use pinchers, nippers or scissors, etc. If cutting is done with tools other than tube cutters, the tube may be cut diagonally or become flattened etc., making a secure installation impossible, and causing problems such as the tube pulling out after installation or air leakage. Allow some extra length in the tube.
- Grasp the tube and push it in slowly, inserting it securely all the way into the fitting.

3 Installation (continued)

- After inserting the tube, pull on it lightly to confirm that it will not come out. If it is not installed securely all the way into the fitting, this can cause problems such as air leakage or the tube pulling out.
- After connecting the tubing, care should be taken not to put excessive force (tensile force, compression, bending etc.) on the tubing.

3.3.2.2 Detaching the tube

- Push in the release bushing sufficiently, and push the collar equally at the same time.
- Pull out the tube while holding down the release bushing so that it does not come out. If the release bushing is not pressed down sufficiently there will be an increased bite on the tube and it will become more difficult to pull out.
- When the removed tube is to be used again, cut off the portion what has been chewed before re-using it. If the chewed portion is used as is, this can cause trouble such as air leakage or difficulty in removing the tube.

3.3.2.3 Other Tube Brands

- When tubing brands other than SMC's are used, verify the tubing O.D. satisfies the following accuracy;
  Polyolefin tubing: Within ±0.1 mm
  Polyurethane tubing: Within +0.15 mm, within –0.2 mm
  Nylon tubing: Within ±0.1 mm
  Soft nylon tubing: Within ±0.1 mm
- Do not use tubing what does not meet these outside diameter tolerances. It may not be possible to connect them or they may cause other problems such as air leakage or the tube pulling out of the connection.

3.3.2.4 Recommended piping conditions

- When connecting tubes using one-touch fittings, provide some spare tube length as shown in Figure 7.

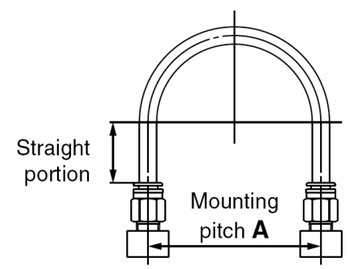

Figure 7

Tube Size	Mounting pitch A (mm)			Straight portion length (mm)
	Nylon tube	Soft nylon tube	Polyurethane tube	
Ø10 mm	140 or more	70 or more	69 or more	50 or more
Ø3/8"	134 or more	105 or more	69 or more	48 or more
Ø12 mm	168 or more	82 or more	88 or more	60 or more

Table 9

3 Installation (continued)

- Do not apply external force to the fitting when binding tubes with bands etc. See Figure 8.

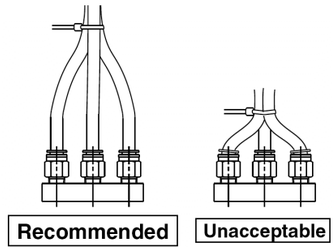

Figure 8

3.4 Electrical connection

Caution

- Avoid mis-wiring, as this can cause malfunction, damage and fire to the product.
- To prevent noise and surge in signal lines, keep all wiring separate from power lines and high voltage lines. Otherwise this can cause malfunction.
- When a surge from the solenoid affects the electrical circuitry, install a surge absorber, etc., in parallel with the solenoid. Or, use an option that comes with surge voltage protection circuit.
- Use electrical circuits that do not generate chattering in their contacts.
- Use voltage that is within ±10% of the rated voltage. In cases with a DC power supply where responsiveness is important, stay within ±5% of the rated value. (The voltage drop is the value in the lead wire section connecting the coil).
- Generally use electrical wire with cross sectional area 0.5 to 1.25 mm^2.
- Do not bend or pull cables repeatedly.
- Do not allow excessive force to be applied to the lines.
- Do not apply AC voltage to Class H coil AC type unless it has a built in full-wave rectifier or it will be damaged.

3.4.1 Grommet

Class B coil: AWG20 Outside insulator diameter of 2.5 mm

Class H coil: AWG18 Outside insulator diameter of 2.1 mm

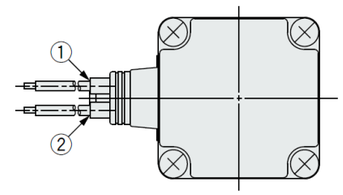

Figure 9

Rated Voltage	Lead wire colour	
	1	2
DC	Black	Red
100 VAC	Blue	Blue
200 VAC	Red	Red
Other AC	Grey	Grey

*There is no polarity

Table 10

3 Installation (continued)

3.4.2 DIN Terminal

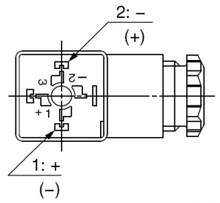

Figure 10

Terminal no.	1	2
Din Terminal	+(-)	-(+)

*There is no polarity

Table 11

- Use a heavy-duty cord with an outside cable diameter of Ø6 to 12 mm.
- Tighten screws and fittings according to Figure 11.

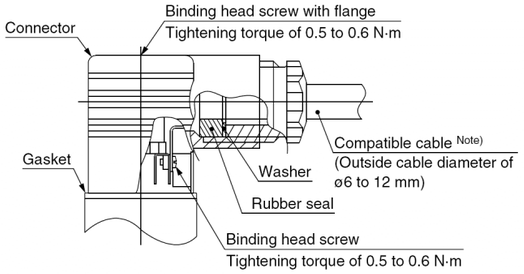

Note) For an outside cable diameter of ø9 to 12 mm, remove the internal parts of the rubber seal before using.

Figure 11

Caution

- For class H coil, surge voltage suppressor and full-wave rectifier (for AC) are on DIN connector side. **A SMC DIN connector must be used.** Part numbers can be found in product catalogue.

3.4.3 Conduit Terminal

- Make connections according to the marking shown in Figure 12.
- Tighten screws and fittings according to Figure 12.
- Properly seal the terminal connection (G1/2) with special wiring conduit, etc.

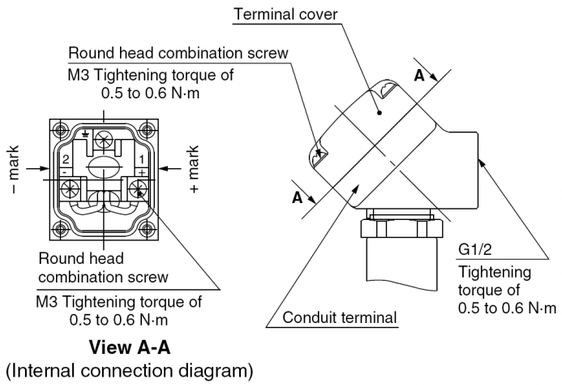

Figure 12

3 Installation (continued)

3.4.4 Conduit

- When used as an IP65 equivalent use seal (VCW20-15-6) to install the wiring conduit.
- Tighten conduit to torque shown in Figure 13.

  Class B coil: AWG20 Outside insulator diameter of 2.5 mm
  Class H coil: AWG18 Outside insulator diameter of 2.1 mm

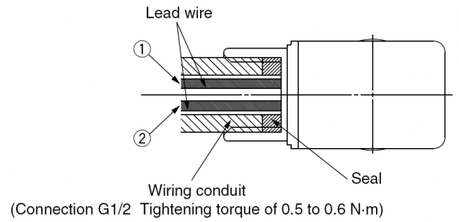

Figure 13

Rated Voltage	Lead wire colour	
	1	2
DC	Black	Red
100 VAC	Blue	Blue
200 VAC	Red	Red
Other AC	Grey	Grey

*There is no polarity

Table 12

3.4.5 'Faston' Terminal – Class B coil, VDC only.

- Faston™ is a trademark of Tyco Electronics Corporation.
- Use 'Amp/Faston' connector/250 series or equivalent.

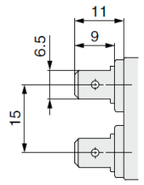

Figure 14

3.5 Electrical circuits

3.5.1 DC circuit

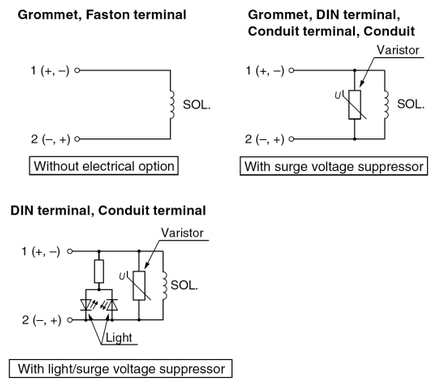

Figure 15

3 Installation (continued)

3.5.2 AC circuit

- For AC the standard product is equipped with surge voltage suppressor.

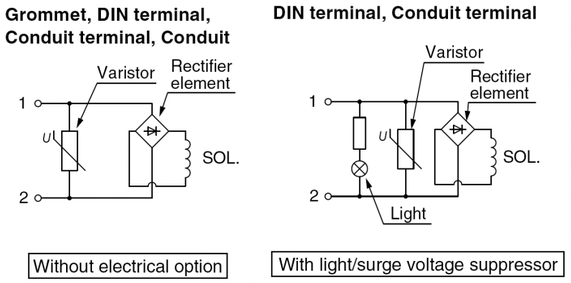

Figure 16

3.6 Mounting

- Secure with brackets, except in the case of steel piping and copper fittings.
- Avoid sources of vibration, or adjust the distance from the body to a minimum length so that resonance will not occur.
- If air leakage increases or equipment does not operate properly, stop operation. After mounting is completed, confirm that it has been done correctly by performing a suitable function test.
- Do not apply external force to the coil section:
  When tightening fittings, apply a wrench or other tool to the outside of the piping connection parts.
- Do not install with the coil downwards.
  If a valve is mounted with the coil positioned downwards, foreign objects in the fluid will adhere to the iron core leading to a malfunction. Especially for strict leakage control, such as with vacuum applications and non-leak specifications, the coil must be positioned upwards.
- Do not warm the coil assembly with a heat insulator, etc.
  Use tape, heaters, etc, for freeze prevention on the piping and body only. They can cause the coil to burn out.
- Painting and coating:
  Warnings or specifications printed or labeled on the product should not be erased, removed or covered up.

3.7 Lubrication

Caution

- SMC products have been lubricated for life at manufacture, and do not require lubrication in service.
- If a lubricant is used in the system, use turbine oil Class 1 (no additive), ISO VG32. But do not lubricate valves with EPDM seals.
- Once lubricant is used in the system, lubrication must be continued because the original lubricant applied during manufacturing will be washed away.

4 How to Order

Refer to the catalogue for this product.

5 Outline Dimensions (mm)

Refer to the catalogue for this product.

6 Maintenance

6.1 General Maintenance

Caution

- Not following proper maintenance procedures could cause the product to malfunction and lead to equipment damage.
- If handled improperly, compressed air can be dangerous. Maintenance of pneumatic systems should be performed only by qualified personnel.
- Before performing maintenance, turn off the power supply and be sure to cut off the supply pressure. Confirm that the air is released to atmosphere.

6 Maintenance (continued)

- After installation and maintenance, apply operating pressure and power to the equipment and perform appropriate functional and leakage tests to make sure the equipment is installed correctly.
- Do not make any modification to the product.
- Do not disassemble the product, unless required by installation or maintenance instructions.
- Exhaust the drainage from the piping periodically.

Warning

6.2 Removing the product:

- The valve will reach a high temperature when used with high temperature fluids. Confirm that the valve temperature has dropped sufficiently before performing work. If touched inadvertently, there is danger of being burned.
  1. Shut off the fluid supply and release the fluid pressure in the system.
  2. Shut off the power supply.
  3. Remove the valve, ensuring any seals are retained.

6.3 Low frequency operation:

- Switch valves at least once every 30 days to prevent malfunction. Also, in order to use it under the optimum state, conduct a regular inspection once every 6 months.

Caution

6.4 Filters and strainers:

- Be careful regarding clogging of filters and strainers.
- Replace filter elements after one year of use, or earlier if the pressure drop reaches 0.1 MPa.
- Clean strainers when the pressure drop reaches 0.1MPa.

6.5 Lubrication:

- When using after lubricating, never forget to lubricate continuously.

6.6 Storage:

- In case of long term storage after use with heated water, thoroughly remove all moisture to prevent rust and deterioration of rubber materials, etc.

7 Limitations of Use

Warning

- Do not exceed any of the specifications laid out in section 2 of this document or the specific product catalogue.

7.1 Confirm the specifications:

- Give careful consideration to the operating conditions such as the application, fluid and environment and use within the operating ranges specified.

7.2 Fluid:

- Type of fluid;
  Before using a fluid, confirm whether it is compatible with the materials for each model by referring to the fluids listed in the catalogue. Use a fluid with a dynamic viscosity of 50 mm^2/s or less.
- Flammable oil, Gas;
  Confirm the specification for leakage, internal and/or external.
  .
- Corrosive gas;
  Cannot be used since it will cause cracks by stress corrosion or result in other incidents.
- When a brass body is used, then depending on water quality, corrosion and internal leakage may occur. If such abnormalities occur, exchange the product for stainless steel body.
- Use an oil-free specification when any oily particles must not enter the system.
- Applicable fluid in the catalogue list may not be suitable depending on the operating conditions. Give adequate consideration and then determine a suitable model, as the compatibility list is for general case.

7 Limitations of Use (continued)

7.3 Fluid: Oil

- Generally FKM is used as seal material, as it is resistant to oil.
- The resistance of the seal material may deteriorate depending on the type of oil, manufacturer, or additives. Check the resistance before using.
- The kinematic viscosity must not exceed 50 mm^2/s.

7.4 Fluid: Water

- The use of water that contains foreign matter can cause problems such as malfunction and seal failure by promoting wear of the valve seat and armature, and by sticking to the sliding parts of the armature, etc.
- Install a suitable filter (strainer) immediately upstream from the valve. As a general rule, use 80 to 100 mesh.
- Tap water pressure. The water pressure for tap water is normally 0.4MPa or less. However, in places like high-rise buildings, the pressure may be 1.0MPa. When selecting tap water, be careful of the maximum operating pressure differential.
- When using water or heated water, poor operation or leaks maybe caused by dezincification, erosion, corrosion, etc.
- The brass (C37) body of this product uses dezincification-resistant material as standard and a stainless steel body type will give improved corrosion resistance. Please select the most suitable for the application.
- When the valve is used to supply water to boilers, substances such as calcium and magnesium, which generate hard scale and sludge, are present. Since this scale and sludge can cause the valve to malfunction, install water softening equipment and a filter (strainer) directly upstream from the valve to remove these substances.

7.5 Air quality:

- Use clean air;
  Do not use compressed air which includes chemicals, synthetic oils containing organic solvents, salt or corrosive gases, etc., as it can cause damage or malfunction of the valve.

- Install air filters;
  Install air filters upstream, close to the valves. A filtration of 5 m or less should be selected.
- Install an air drier or after cooler;
  Compressed air that includes excessive drainage may cause malfunction of valves and other pneumatic equipment. To prevent this, install an air drier or after cooler, etc.
- If excessive carbon powder is generated, eliminate it by installing mist separators upstream of the valves. If excessive carbon powder is generated by the compressor, it may adhere to the inside of the valves and cause a malfunction.

7.6 Leakage voltage:

When connecting C-R element parallel to switching element, leakage current flows through C-R element and the leakage voltage increases.

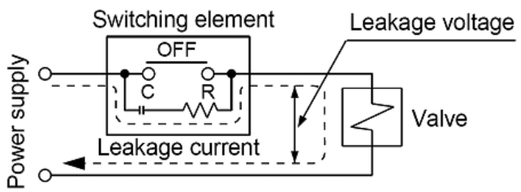

Figure 17

- Ensure that the voltage leakage across the coil is as follows:
  AC coil: 5% or less of rated voltage.
  DC coil: 2% or less of rated voltage.

7.7 Low temperature operation:

- The valve can be used in an ambient temperature of between -10 to –20°C. However, take measures to prevent the water from freezing or solidification of impurities, etc.
- When using valves for water application in cold environments, take appropriate countermeasures to prevent water freezing in the system,

7 Limitations of Use (continued)

after the water supply from the pump is cut off, by draining the water, etc.
- When warming by a heater, etc., be careful not to expose the coil assembly to the heater.
- For air, installation of a drier and heat retaining of the body is recommended to prevent a freezing condition in which the dew point temperature is higher than the ambient temperature.

7.8 Cannot be used as an emergency shut-off valve etc.

- This product is not designed for safety applications such as an emergency shut-off valve. If the valves are used in this type of system, other reliable safety assurance measures should also be adopted.

7.9 Extended periods of continuous energization

- The solenoid coil will generate heat when continuously energized, so avoid installing in an enclosed space. Install in a well-ventilated area.
- Do not touch the coil while it is being energized or immediately after energization.
- Be especially careful when using three or more adjacent valves with manifolds and keeping them continuously energized for extended periods, as this may result in dramatic increases in temperature.

7.10 Liquid circuits

- In cases with flowing liquid, provide a bypass valve in the system to prevent the formation of a sealed circuit.

7.11 Water hammer

- When problems are caused by water hammer, install water hammer relief equipment (accumulator, etc.), or use a SMC water hammer relief valve (e.g. VXR series).

7.12 Back pressure

- If there is a possibility of back pressure being applied to the valve, take countermeasures such as mounting a check valve on the downstream side of the valve.

7.13 Usage with low flow

- Unstable flow may occur under the following conditions;
  Low flow from the pump or boiler, etc.
  Use of several elbows or tees in the circuit.
  Thin nozzles installed at the end of piping, etc.
  These can cause valve opening/closing failure or oscillation and cause a valve malfunction.
  Check the pressure differential and flow to select the appropriate size of valve by referring to the flow rate characteristics. Ensure the pressure differential does not become less than 0.01MPa during ON (N.C.: Valve Open).

7.14 Rapid pressure changes

- If used in conditions in which rapid decrease in the inlet pressure and rapid increase in the outlet pressure of the valve are repeated, excessive stress will be applied to the piston, which causes damage to the piston, leading to malfunction of the valve.
  Check the operating conditions before use.

7.15 Sudden inlet pressure increase

- When valve is closed and pressure is applied suddenly due to starting of fluid supply source, such as boiler, the valve may open momentarily and fluid may leak.

8 Contacts

AUSTRIA	(43) 2262 62280-0	**LATVIA**	(371) 781 77 00
BELGIUM	(32) 3 355 1464	**LITHUANIA**	(370) 5 264 8126
BULGARIA	(359) 2 974 4492	**NETHERLANDS**	(31) 20 531 8888
CZECH REP.	(420) 541 424 611	**NORWAY**	(47) 67 12 90 20
DENMARK	(45) 7025 2900	**POLAND**	(48) 22 211 9600
ESTONIA	(372) 651 0370	**PORTUGAL**	(351) 21 471 1880
FINLAND	(358) 207 513513	**ROMANIA**	(40) 21 320 5111
FRANCE	(33) 1 6476 1000	**SLOVAKIA**	(421) 2 444 56725
GERMANY	(49) 6103 4020	**SLOVENIA**	(386) 73 885 412
GREECE	(30) 210 271 7265	**SPAIN**	(34) 945 184 100
HUNGARY	(36) 23 511 390	**SWEDEN**	(46) 8 603 1200
IRELAND	(353) 1 403 9000	**SWITZERLAND**	(41) 52 396 3131
ITALY	(39) 02 92711	**UNITED KINGDOM**	(44) 1908 563888

SMC Corporation

URL : http// www.smcworld.com (Global) http// www.smceu.com (Europe)