SMC

ORIGINAL INSTRUCTIONS

Instruction Manual

Thermo-chiller

HRS200-A∗-46-∗S∗ Series

Refer to Declaration of Conformity for relevant Directives.

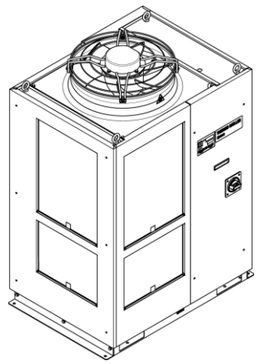

1 Safety Instructions

These safety instructions are intended to prevent hazardous situations and/or equipment damage. These instructions indicate the level of potential hazard with the labels of "Caution," "Warning" or "Danger."
They are all important notes for safety and must be followed in addition to International Standards (ISO/IEC) [*1)], and other safety regulations.

[*1)] ISO 4414: Pneumatic fluid power - General rules relating to systems.
ISO 4413: Hydraulic fluid power - General rules relating to systems.
IEC 60204-1: Safety of machinery - Electrical equipment of machines. (Part 1: General requirements)
ISO 10218-1: Manipulating industrial robots -Safety. etc.

- Refer to product catalogue, Operation Manual and Handling Precautions for SMC Products for additional information.
- Keep this manual in a safe place for future reference.

⚠ **Caution**	Caution indicates a hazard with a low level of risk which, if not avoided, could result in minor or moderate injury.
⚠ **Warning**	Warning indicates a hazard with a medium level of risk which, if not avoided, could result in death or serious injury.
⚠ **Danger**	Danger indicates a hazard with a high level of risk which, if not avoided, will result in death or serious injury.

⚠ Warning

- **Always ensure compliance with relevant safety laws and standards.**
All work must be carried out in a safe manner by a qualified person in compliance with applicable national regulations

1.1 General Description and Intended Use

This product used a built-in pump to circulate a liquid such as water, adjusted to a constant temperature by the refrigeration circuit. This circulating liquid cools parts of customer's machine that generate heat.

2 Specifications

2.1 Product Specifications

HRS200 - A∗ - 46 - ∗S∗

Model			HRS200-A∗-46-∗S∗
Cooling method			Air-cooled refrigerated
Refrigerant			R410A (HFC) ; 2088 (GWP)
Quantity of refrigerant		kg	1.65
Control method			PID control
Ambient temperature [*1*2*8]		°C	- 5 to 45
Circulating fluid system	Circulating fluid [*1*2]		Tap water, 15% Ethylene glycol aqueous solution, Deonized water
	Operating temp. range [*1]	°C	5 to 35
	Cooling capacitys 50/60Hz [*3]	kW	17.5 / 20.5
	Heating capacity 50/60 Hz [*4]	kW	3.3 / 5.3
	Temperature stability [*5]	°C	±1.0
	Pump capacity: Rated flow rate 50/60Hz (outlet)	L/min	45 (0.31 / 0.45 MPa)
	Pump capacity: Max. flow rate 50/60Hz	L/min	110 / 130
	Pump capacity: Max. lifiting height	m	36 / 50
	Min. operating flow rate 50/60 Hz [*6]	L/min	25
	Tank capacity	L	25
	Circulating fluid Outlet and Inlet port		Rc1 (Symbol F: G1, Symbol N: NPT1)
	Drain port		Rc3/4 (Symbol F: G3/4, Symbol N: NPT3/4)
	Automatic fluid fill function: Supply Press. range	MPa	0.2 to 0.5
	Automatic fluid fill function: Supply fluid range	°C	5 to 35
	Automatic fluid fill function: Automatic fluid fill port		Rc1/2 (Symbol F: G1/2, Symbol N: NPT1/2)
	Automatic fluid fill function: Over flow port		Rc1 (Symbol F: G1, Symbol N: NPT1)
	Wetted material	Metal	Stainless steel, Copper (Heat exchanger brazing), Brass, Bronze
		Resin	PTFE, PU, FKM, EPDM, PVC, NBR, POM, PE, NR
Electric system	Power supply	50Hz	3 phase 380 to 415 VAC Allowable voltage fluctuation ±10% (No continuous voltage fluctuation)
		60Hz	3 phase 460 to 480 VAC Allowable voltage fluctuation +4%, -10% (Maximum voltage less than 500 VAC and no continuous voltage fluctuation)
	Recommended earth leakage breaker [*8]: Rated current	A	30
	Recommended earth leakage breaker [*8]: Sensitivity	mA	30
	Rated operating current 50/60 Hz [*5]	A	13.4 / 14.2
	Rated power consumption 50/60 Hz [*5]	kW	6.8 / 9.1
		kVA	9.4 / 11.4
Noise level (Front 1m / Height 1m) [*5]		dB(A)	75
Water-proof specification			IPX4
Accessory			Alarm cord list label 2pc.(English 1pc./Japanese 1pc.), Operation manual 2pc. (English 1pc./Japanese 1pc.), Y strainer (40 meshes) 25A, Barrel nipple 25A Anchor bracket 2pcs. (incuding 6pcs. Of M8 bolts) [*7]
Weight (dry condition)		kg	Approx. 214

Notes:

∗1: When the ambient temperature or circulating fluid temperature is 10 °C or below, refer to "3.2.2 Operation at low ambient temperature or low circulating fluid temperature" in the Operation Manual attached.

∗2: Use fluid for circulating fluid that conforms to:
Clean water: Water Quality Standards of the Japan Refrigeration and Air Conditioning Industry Association (JRA GL-02-1994). 15% ethylene glycol aqueous solution: Diluted with clean water, without any additives such as antiseptics. DI water (pure water): Electrical conductivity 1 μS/cm or more (electrical resistivity 1MΩ・cm or less)

∗3: (1) Ambient temperature: 32 °C, (2) Circulating fluid: Clean water, (3) Circulating fluid temperature: 20 °C, (4) Circulating fluid flow rate: Rated flow rate, (5) Power supply: 400 VAC(50Hz)/460 VAC(60Hz).

∗4: (1) Ambient temperature: 32 °C, (2) Circulating fluid: Clean water, (3) Circulating fluid flow rate: Rated flow rate (4) Power supply: 400 VAC(50Hz)/460 VAC(60Hz).

∗5: (1) Ambient temperature: 32 °C, (2) Circulating fluid: Clean water, (3) Circulating fluid temperature: 20 °C, (4) Load: Refer to the cooling capacity shown in the specification table, (5) Circulating fluid flow rate: Rated flow rate, (6) Power supply: 400 VAC(50Hz)/460 VAC(60Hz), (7) Piping length: Minimum.

∗6: Required flow rate to maintain the cooling capacity. When the flow rate is lower than the rated flow, use a by-pass piping set.

∗7: The anchor brackets (including M8 bolts x 6 pcs.) are used for fixation with the skid when this product is packed. The anchor bolts are not attached.

2 Specification (continue)

2.2 Production Serial Number Code

The production serial number code printed on the label indicates the month and year of production as per the following table:

Month \ Year		2020	2021	2022	….	2025	2026	2027	….
		y	Z	A	….	D	E	F	….
Jan	o	yo	Zo	Ao	….	Do	Eo	Fo	….
Feb	P	yP	ZP	AP	….	DP	EP	FP	….
Mar	Q	yQ	ZQ	AQ	….	DQ	EQ	FQ	….
Apr	R	yR	ZR	AR	….	DR	ER	FR	….
May	S	yS	ZS	AS	….	DS	ES	FS	….
Jun	T	yT	ZT	AT	….	DT	ET	FT	….
Jul	U	yU	ZU	AU	….	DU	EU	FU	….
Aug	V	yV	ZV	AV	….	DV	EV	FV	….
Sep	W	yW	ZW	AW	….	DW	EW	FW	….
Oct	X	yX	ZX	AX	….	DX	EX	FX	….
Nov	y	yy	Zy	Ay	….	Dy	Ey	Fy	….
Dec	Z	yZ	ZZ	AZ	….	DZ	EZ	FZ	….

3 How to Order

HRS 200 - A □ - 46 - □ S □

① Cooling capacity

200	20kW

② Cooling method

A	Air-cooled refrigeration

③ Piping thread type

Nil	Rc
F	G (Rc-G thread adapter set is included)
N	NPT (Rc-NPT thread adapter set is included)

④ Power supply

46	AC380-415V(50Hz) 3phase AC460-480V (60Hz) 3phase

⑤ Options 1

Nill	None
A	Caster adjuster feet (installed)
K [*1]	Fluid port

1*: Manual fluid fill port that is different from the automatic fluid-fill function. This enables that circulating fluid can be filled manually without removing the side panel. (in case of without 'K' option, circulating fluid can be filled manually removing the side panel.)

⑥ Options 2

Nill	None
W [*2]	Fixed SI units

2*: Unit: MPa / °C (degree Celsius)

4 Name of Parts and Accessories

4.1 Accessories

- Check the enclosed accessories with the delivered Thermo-chiller.

1	Alarm cord list label (English)		1pc
2	Operation manual (English)		1pc
3	Y strainer (40 meshes) 25A		1pc
4	Barrel nipple 25A		1pc
5	HRS∗∗∗-AF-∗∗ G thread adapter set (HRS-EP014) HRS∗∗∗-AN-∗∗ NPT thread adapter set (HRS-EP013)		1 set
-	Anchor brackets (M8 bolts)	---	2pc (6pcs)

*These accessories are not explained in this manual. For details, refer to the Operation Manual attached.

4.2 Main Parts

- The names of parts used in this manual are as follows:

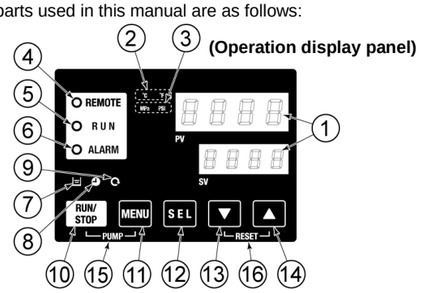

4.3 Outline Dimensions

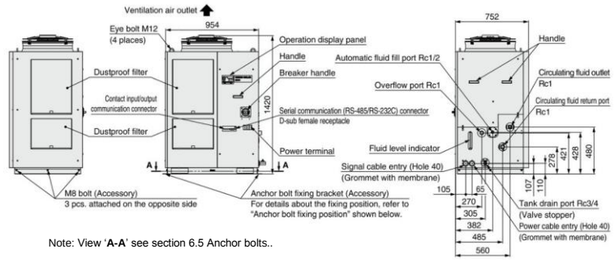

Note: View '**A-A**' see section 6.5 Anchor bolts..

HRS200-A-46-S (Air cooled type)

5 Transportation, Transfer and Moving

5.1 Moving by forklift and slinging or by casters

⚠ Warning

- The product is a heavy object (Refer to 2.1 Product specification for weights).
- Moving by forklift and slinging should be done by persons who have required licenses.
- Moving the product by casters should be done by 2 persons or more

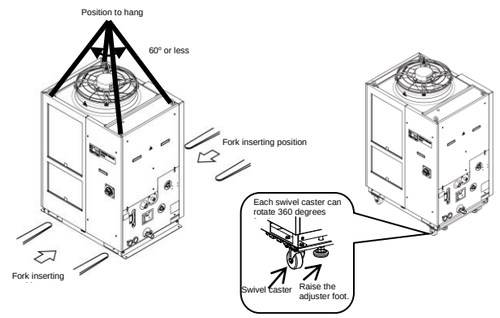

4 Name of Parts and Accessories (continue)

No	Description	Function	
1	Digital display (7-segment, 4 digits)	PV	Displays the temperature and pressure of the circulating fluid and alarm codes.
		SV	Displays the set temperature of the circulating fluid and the set values of other menus.
2	[°C] [°F] light	Equipped with a unit conversion function. Displays the unit of display temperature (default setting °C).	
3	[MPa] [PSI] light	Equipped with a unit conversion function. Displays the unit of display pressure (default setting MPa).	
4	[REMOTE] light*	Enables the remote operation (start and stop) by communication. Lights up during remote operation.	
5	[RUN] Light	Lights up when the product is started and in operation. Goes off when the product is stopped. Flashes during stand-by for stop or anti-freezing function, or independent operation of the pump and warming up function.	
6	[ALARM] Light	Flashes with buzzer when alarm occurs. Flashes while AL25 is OFF.	
7	[ ] Light	Lights up when the surface of the level indicator falls below the 'L' (low) level.	
8	[ ] Light *	Lights up while the run timer or stop timer function is ON.	
9	[ ] Light *	Lights up when the product is in automatic operation.	
10	[RUN/STOP] key	Makes the product start or stop.	
11	[MENU] key*	Shifts from the main menu (display which shows circulating fluid temperature, pressure and etc.) to the other menus (entry of set values and monitor screen).	
12	[SEL] key*	Changes the item in menu and enters the set value.	
13	[▼] key	Decreases the set value.	
14	[▲] key	Increases the set value.	
15	[PUMP] key	When the [MENU] and [RUN/STOP] buttons are held down simultaneously, the pump starts running independently.	
16	[RESET] key	Press the [▼] and [▲] keys simultaneously. This will stop the alarm buzzer and turn off the [ALARM] light.	

*These lights and keys are not explained in this manual. For details, read the Operation Manual attached.

6 Installation

6.1 Installation

Warning

- Do not install the product unless the safety instructions have been read and understood.

6.2 Types of Hazard Labels

Warning

- The product has various potential hazards and they are marked with warning labels.

Warning related to Electricity

	This symbol stands for a possible risk of electric shock.

Warning related to High Temperatures

	This symbol stands for a possible risk of hot surface and burns.

Warning related to Rotating Objects

	This symbol stands for a possible risk of cutting fingers or hand, or entanglement by rotating fan (For air-cooled type).

Warning related to other General Dangers

	This symbol stands for general danger.

6.3 Environment

Warning

- Do not use in an environment where corrosive gases, chemicals, salt water or steam are present.
- Do not use the product in an area of high temperature and humidity which cannot be exhausted, or where it is exposed to corrosive substances. Cooling failure can result.
- Do not use in an explosive atmosphere.
- Do not use in locations at altitudes of 3000m or higher (except for product storage and transport), refer to the Operation Manual.
- Do not install in a location exposed to direct sunlight and radiant heat.
- Do not install in a location subject to vibration or impact.
- Do not install in locations that is exposed to the splash of water that is higher than IPX4.
- Do not expose to potential lighting strike.

6.4 Mounting

Warning

- The Installer / End User is responsible for carrying out a noise risk assessment on the equipment after installation and taking appropriate measures as required.

Caution

- Have enough space for ventilation for the product. Otherwise may cause a lack of cooling capacity or/and stoppage of the product.
- Have enough space for maintenance.
- Install the product on a vibration free floor.
- Prepare M10 anchor bolts that are suitable to the floor that the product will be installed. Refer to '**6.5 Anchor bolts**' for outline dimensions for the position of the anchor bolts.

6 Installation (continue)

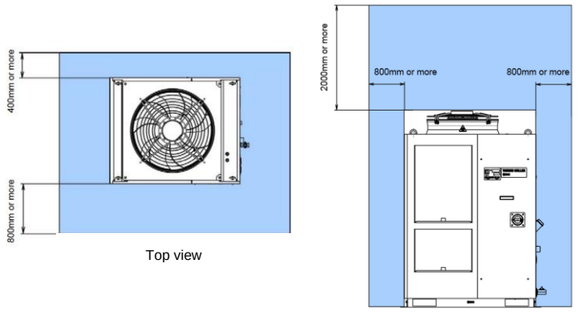

Top view

Front view

Recommend installation space

6.5 Anchor bolts (dimensions (mm); position view A-A)

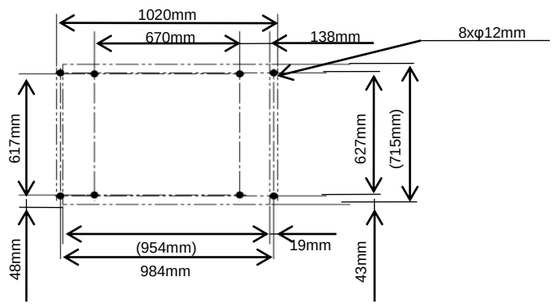

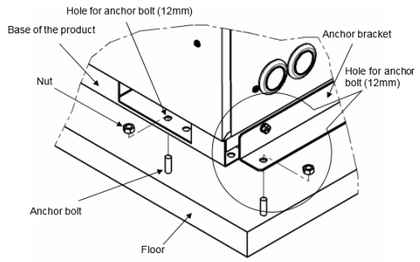

1) Position product to the anchor bolts that were previously driven on the level floor.
2) Fasten the nuts to the anchor bolts.
3) Make sure that there is no looseness on all the anchor bolts and nuts.
4) SMC Foundations bolt set [IDF-AB500] (SUS M10x50mm) is applicable. Please order separately.

Option A [Caster Adjuster-foot kit] (HRS-KS002)

Caution

In case of using "Caster Adjuster-foot kit", be sure to use the adjuster foot to install on the floor. The adjuster foot is not earthquake-proof. If necessary make an earthquake-resistant measure on the customer side.

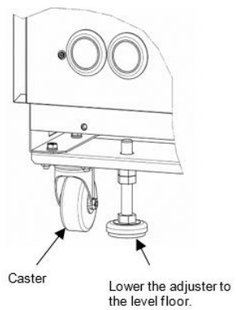

6 Installation (continue)

6.6 Piping

Caution

- Before piping make sure to clean up chips, cutting oil, dust etc.
- The piping should be selected with due consideration of temperature and pressure.
- Do not generate a rapid change of pressure by water hammer etc. The product and piping might be damage.
- Hold the piping port firmly with specific wrench when tightening.

Tighten the piping to each connection as follows below:

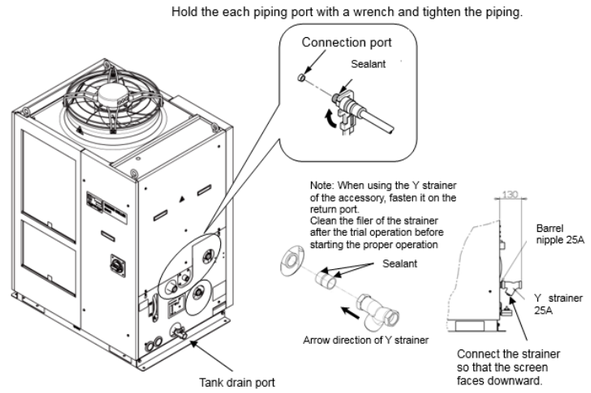

6.6.1 Tighten fittings to the specified ti ghtening torque.

Name	Port size	Recommended tightening torque	Recommended piping specification
Circulating fluid Outlet port	Rc1	36 to 38 N·m	1.0MPa and more
Circulating fluid return port	Rc1	36 to 38 N·m	1.0MPa and more
Automatic fluid fill port	Rc1/2	20 to 25 N·m	1.0MPa and more (Automatic fluid -fill pressure : 0.2 to 0.5MPa)
Overflow port	Rc1	36 to 38 N·m	ID 25mm and more Length 5m and less
Tank drain port	Rc3/4	28 to 30 N·m	ID 19mm or more

When piping the pump drain port, hold the ball valve of the drain port with a wrench not to rotate it.

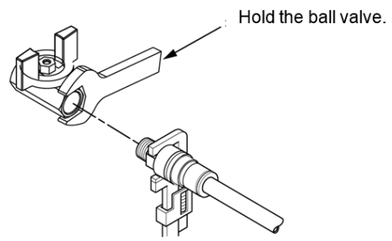

6 Installation (continue)

6.7 Filling of Circulating Fluid

Caution

- When the set circulating fluid temperture and/or the ambient temperature is lower than 10ºC, use 15% aqueous solution of Ethylene Glycol. Tap water may freeze in the Thermo-chiller, leading to malfunction. Additives such as antiseptics cannot be used.
- If deionized water is used, the conductivity should be 1μS/cm or higher (Electrical resistivity: 1MΩ·cm and lower).
- Confirm that the fluid level is between "High" and "Low" level of the fluid level gauge.
- Connect the piping from the overflow port to the sump pit to drain the excessive fluid from the tank.
- Check drain port is closed by the valve to prevent the supply circulating fluid from draining out.

6.7.1 Auto fluid-fill function

1) Open the fluid supply valve that is connected to the automatic water fill port.

2) Fluid supply starts and stop automatically with ball tap in the tank.

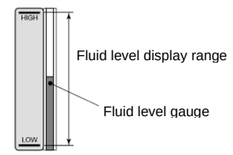

Fluid level gauge

6.7.2 Fill of fluid without using the auto fluid-fill function

1. Remove the screws (6 pcs) to remove the right side upper panel.

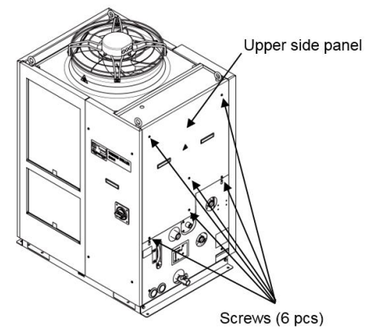

2. Hold the handle and lift the upper right side panel, and, remove panel. Remove the wing nuts (4pcs) on top of thetank and remove lid.

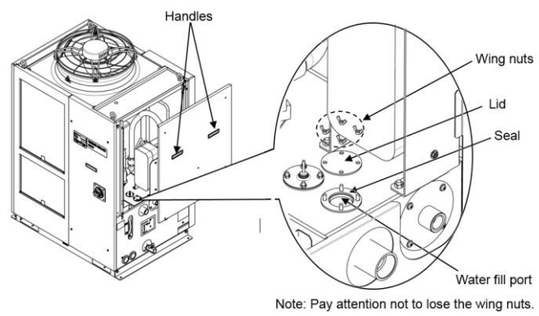

Note: Pay attention not to lose the wing nuts.

6 Installation (continue)

3. Fill the circulating fluid in the fluid port

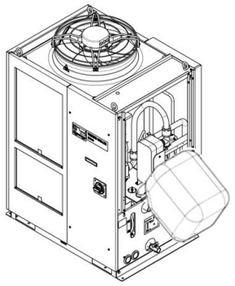

Filling the fluid to the port.

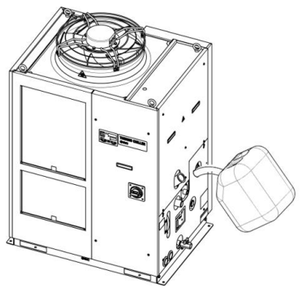

Option 'K' (Fluid fill port)

6.8 Wiring of Power Supply Cable

Warning

- The electrical facilities should be installed and wired in accordance with local laws and regulations of each country and by the person who has knowledge and experience.
- Check the power supply. Operation with voltages, capacities, frequencies and cable sizes other than those specified can cause heat, fire and electrical shock.
- Wire with an applicable cable size and terminal.
- Be sure to shut off the user's power supply. Wiring with the product energized is strictly prohibited.

Caution

- Use an individual socket or earth leakage breaker.
- Be sure to provide grounding. Incomplete grounding can cause failure and electrical shock.
- When panel is removed or mount, be sure to wear protective shoes and gloves to prevent injury with the edge of the panel.

6.8.1 Preliminary Preparation for Wiring

Prepare the power supply shown in the following table. For the connection between the product and power supply, use the power supply cable and earth leakage breaker shown below:

Model	Power supply voltage	Terminal block screw diameter	Recommend crimp terminal	Cable specification*2	Earth leakage breaker*1	
					Rated current [A]	Sensitivity of leak current [mA]
HRS200-A*-46-*S	380-415 VAC 50Hz 3 phase, 460-480 VAC 60Hz 3 phase	M5	R5.5-5	4 cores x 5.5mm² (4 cores x AWG10) *including ground	30	30

*1. Specified earth leakage breaker and handle are installed for the product.
*2. Cable specifications are the examples when using the product at a continuous allowable operating temperature of 70 ºC, with an operating voltage of 600 V and two kinds of plastic insulated wires at an ambient temperature of 30 ºC. Please select the proper size cables according to the actual condition.

6.8.2 Wiring of Power Supply

1) Turn off the breaker handle.
2) Remove 4 screws to remove the front panel.
3) Hold the handle and pull up the front panel of the electrical unit, and remove.

Note: Turn off the earth leakage breaker. The front panel of the electrical unit cannot be removed without turning off the breaker.

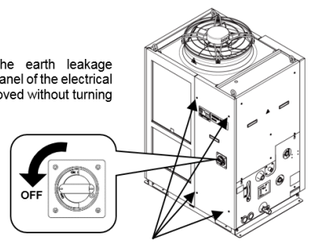

Screws (4pcs)

6 Installation (continue)

4) Connect the power supply cable and ground cable as shown below:

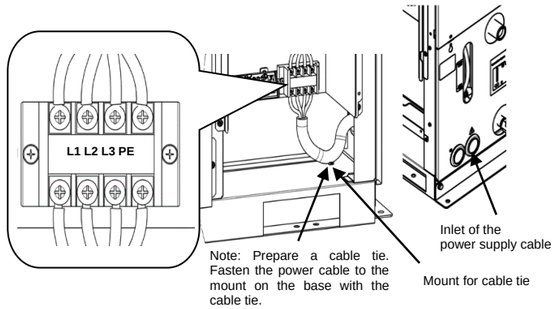

- Connect an over current protection to the power cableconnected to the equipment to avoid hazard.
- For operation of the product in the UL compliant condition, the cable tie must be UL compliant.

7 Start, Stop and Temperature Settings

7.1 Preliminary Preparation for Start-up

7.1.1 Supply of Power

1) Turn on the breaker handle.

→The initial screen (HELLO) will be displayed for approx. 8 seconds on the operation panel. Then the display changes to the main screen which displays the circulating fluid outlet temperature.

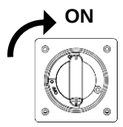

7.1.2 Preparation of circulating fluid

1) Press the [PUMP] key ([RUN/STOP] key and [MENU] key simultaneously). The [RUN] lamp flashes and only the pump continues the operation. This operation allows the discharge of the circulating fluid, and enables checking leakage from the piping and air release.
2) At this time, the fluid level can lower and cause the alarm "AL01; Low tank level", which will lead to the stop of the product.
3) In that case, check that there is no leakage from the user's piping, fill the circulating fluid as specified in "**6.7 Filling of Circulating Fluid**" and take necessary actions in "**8. Reset Alarms**".
4) Repeat steps 1) to 3) until the alarm ("AL01; Low tank level") is no longer generated.

7.1.3 Temperature Setting

1) Press the [▼] and [▲] keys to change the SV to the required value.

7.2 Start of the Product

1) Press the [RUN/STOP] key on the operation panel.

⇒The [RUN] LED (green) turns on and the product starts running.

The circulating fluid discharge temperature (PV) is controlled to the set temperature (SV).

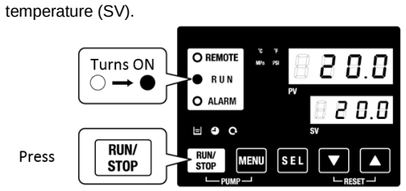

7 Start, Stop and Temperature Settings (continue)

7.3 Stop of the Product

1) Press the [RUN/STOP] key on the control panel.

⇒The [RUN] LED flashes (green) and continues the operation until the product is ready to stop. After approx. 20 seconds, the [RUN] LED goes off and the product stops.

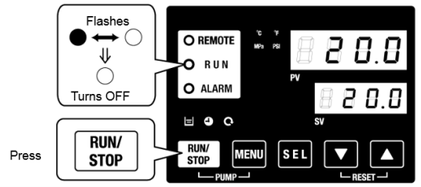

8 Reset Alarms

Caution

- Should some errors occur, the [ALARM] lamp flashes (in red) and the buzzer sounds to inform the user of the 'Error'.
- The alarm code will be displayed on the operation panel so that the cause can be checked on "Troubleshooting".

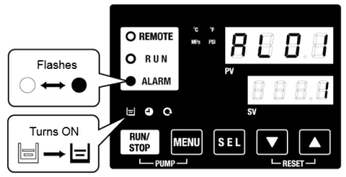

- Before resetting the alarm, read the "Causes and Remedies" of "Troubleshooting" and eliminate the cause as explained. Otherwise, the same alarm may be repeated.
- As accessories, the alarm code list label are enclosed. Stick the label to the panel to check the contents of alarm codes.

8.1 Reset of alarm

1) Press the [RESET] key ([▼] and [▲] keys together).

⇒The buzzer and then [ALARM] lamp (red) go off.

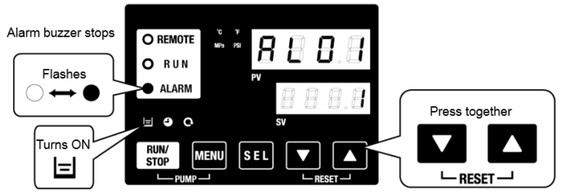

9 Maintenance

9.1 General Maintenance

Warning

- Do not operate switches, etc. with wet hands and do not touch the electrical parts such as the power supply plug. It might cause electric shock.
- Do not splash water directly on the product and do not wash with water. It might cause electric shock and fire, etc.
- Do not touch the fins directly when cleaning the dustproof filter. It might cause injury.
- Remount all panels removed for inspection or cleaning. As this might cause injury or electric shock if the prodcut is operated without the panels.

Caution

- Not following proper maintenance procedures could cause the product to malfunction and lead to equipment damage.
- Before performing maintenance, turn off the power supply. After installation and maintenance, turn on power to the equipment and perform appropriate functional and leakage tests to make sure the equipment is installed correctly.
- Do not make any modification to the product.
- Do not disassemble the product, unless required by installation or maintenance instructions.

9 Maintenance (continue)

9.2 Control of Circulating Fluid Quality

Warning

- Use specified circulating fluids only. If other fluids are used, they may damage the product or result in dangerous hazards.
- When using fresh tap water ensure that it satisfies the water standard shown in the Operation Manual.

9.3 Daily Check

Caution

- Check each item of "Daily checklist", and if any error is seen, stop the operation of the product and turn off the user's power supply, and service the product.

Daily checklist

Item	Description of checking	
Installation condition	Check the installation conditions of the product.	Check that there is no heavy object on the product or excessive force appying to the piping.
		Temperature should be within the specification range of the product.
Fluid leakage	Check the connected part of piping	Check that there is no fluid leakage from the connected parts of the piping.
Fluid amount	Check the liquid level indicator.	Fluid level should be between "HIGH" and "LOW" levels of the fluid level meter.
Operation panel	Check the display.	The numbers shown on the display should be clear and legible.
	Check the function.	Check that the keys, [RUN/STOP], [MENU], [SEL], [▼], and [▲], operate correctly.
Circulating fluid temperature	Check on the operation panel.	There should be no problem for operation.
Circulating fluid flow rate	Check on the operation panel.	There should be no problem for operation. If flow rate has become smaller, check for any clogging of the Y-strainer and clean it.
Operating conditions	Check the operation condition.	There should be no abnormality with noise, vibration, smell, or generation of smoke.

9.4 Monthly Check

Cleaning of air vent (Air-cooled type)

Caution

- If the air ventilation of the product have clogged with dust or debris, heat radiation performance reduces. This results in the reduction of cooling performance, and may stop the operation.

9.4.1 Removal of the Dustproof Filter

1) The dust-proof filters are installed on the front and left side of the product. In total there are four filters with the same shape.
2) The dustproof filters can be removed as shown in the below drawing. Care should be taken not to deform or scratch the air-cooled condenser.

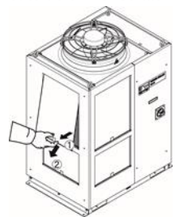

9.4.2 Cleaning of Filter

1) Clean the dust filter with a long bristled brush or by air purging.

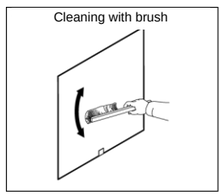

Cleaning with brush

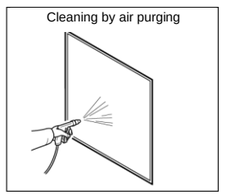

Cleaning by air purging

2) Mount the dustproof filter in reverse order of removal.

9 Maintenance (continue)

9.5 Inspection Every 3 Months

9.5.1 Replacement of Circulating Fluid

- Replace the exiting circulating fluid with new circulating fluid periodically. Otherwise algae or decompose may occur.
- In case of using the Y strainer (accessory), clean the screen mesh in the strainer when exchanging the circulating fluid.
  - Ensure that there is no circulating fluid left in the product, customer's machine and piping.
  - Remove the cap cover of the strainer and take out the screen mesh and clean with detergent or/and purge by air. Take care not to damage the screen mesh.
  - Do not use any chlorinated detergents and cleansers.

9.6 Inspection for winter season

⚠ Caution

- The power supply should be '**ON**' for these functions. Otherwise these functions cannot start.

▪ **Anti- freezing function**: To prevent the circulating fluid freezing during winter, this function operates pump automatically to heat the circulating fluid by the pump's heat radiation. (For details refer to operation manual)

▪ **Warming up function:** During winter or night, this function operates pump automatically to heat the circulating fluid by the pump's heat radiation to keep the circulating fluid temperature around the warming up function set temperature. (For details refer to operation manual)

▪ **Anti-snow coverage function:** To prevent the snow coverage on the ventilation air outlet of the fan in winter, this function operates fan automatically. (For details refer to operation manual)

▪ **Freezing of the facility water**: Discharge the facility water circuit when there is fear of a freeze (For details refer to operation manual).

9.7 Draining of the Circulating Fluid

⚠ Warning

- Before draining the circulating fluid, stop the user's equipment and release the residual pressure.

9.7.1 Draining of the circulating fluid

1) Turn OFF the breaker of the user's power supply.
2) Close the valve that is connected to the auto-fill port.
3) Open the ball valve of the pump drain port and drain the circlulating fluid.
4) Ensure the circulating fluid has been completely drained from the product, user's machine and piping, and, then purge air from the circulating fluid outlet port of the prodcut.
5) Close the ball valve after discharging the circlulating fluid.

9.8 Consumable Parts

Part No.	Description	Qty	Remark
HRS-S0213	Dust-proof filter (Lower)	1	2 pcs used per unit
HRS-S0214	Dust-proof filter (Upper)	1	2 pcs used per unit

10 Troubleshooting

10.1 Troubleshooting

The troubleshooting method depends on which alarm has been generated. Refer to the "Alarm code list and Troubleshooting".

⚠ Warning

- In the event of an unexpected problem or malfunction, switch off the product and investigate the cause. If the cause of the problem cannot be determined, do not use the product, but contact SMC for assistance.

Alarm code list and Troubleshooting

Code	Description	Operation	Cause/Remedy (Press the reset key after eliminating the cause.)
AL01	Low level in tank	A.RUN	The fluid level of the level indicator has fallen. Fill or add the circulating fluid.
AL02	High circulating fluid discharge temp.	A.STP	・Check that the ambient temperature, facility water specifications and heat load are within the specified ranges. ・Check circulating flow rate to keep minimum operating flow rate by check monitor menu. ・Check the value of A5.04. ・Wait until the circulating fluid temperature lowers.
AL03	Circulating fluid discharge temp. rise	A.RUN	
AL04	Circulating fluid discharge temp. drop	A.RUN	・Check that the filled circulating fluid temperature is within the specified range. ・Check the value of A5.06.
AL05	High circulating fluid return temp.	A.STP	・Check that the circulating fluid flows. ・Check that the heat load is within the specified range.
AL08	Circulating fluid discharge pressure rise.	A.STP	Check that there is no bending, collapse, or clogging with the external piping. "EEEE" shown on the PI display in the check monitor menu indicates shirt-circuit or broken wire of the pressure sensor in the circulating fluid circuit. Ask for the service for the pressure sensor.
AL09	Circulating fluid discharge pressure drop	A.STP	Restart and check if the pump runs. In case of displaying EEEE on the Pi display of the main display and check monitor menu, the pressure sensor of the circulating fluid circuit has a malfunction. Ask for service.
AL10	High compressor suction temp.	P.RUN	・Check the returned circulating fluid temperature. ・Check that the heat load is within the specified range.

10 Troubleshooting (continue)

Code	Description	Operation	Cause/Remedy (Press the reset key after eliminating the cause.)	
AL28	Pump maintenance	OFF	Notices of periodical maintenances. Ask for services of the pump, fan and/or compressor. Each periodical time can reset by S5.15, S5.16 and S5.17.	Every 20,000h
AL29*1	Fan maintenance	OFF		Every 30,000h
AL30	Compressor maintenance	OFF		Every 30,000h
AL31	Contact input 1 signal detection	A.STP	Contact input is detected.	
AL32	Contact input 2 signal detection	A.STP		
AL37	Compressor discharge temp. sensor failure	P.RUN	Short-circuit or broken wire of the temperature sensor. Ask for service for the temperature sensor.	
AL38	Compressor discharge temp. rise	P.RUN	Check that the ambient temperature, facility water specifications and heat load are within the specified ranges.	
AL40	Dust-proof filter maintenance	OFF	Notice of the periodical maintenance. Clean the dust-proof filter. This periodical time can reset by S5.30. This alarm can be turned OFF with the menu A5.29.	1 to 9999h (A5.31)
AL41	Power stoppage	A.STP	The power was shut off during operation. Restart after checking the power supply.	
AL42	Compressor waiting	A.RUN	Waiting for the compressor to be ready for operation. Wait for a while. The alarm will be reset automatically after starting operation.	
AL43	Fan breaker trip	P.RUN	Check that there is no power failure such as ground fault, short circuit, voltage fluctuation, abnormal interphase voltage, open phase, surge.	
AL45	Compressor over current	P.RUN	Check that there is no power failure such as ground fault, short circuit, voltage fluctuation, abnormal interphase voltage, open phase, surge. Release the compressor or pump thermal trip refer operation manaual [6.3.2 How to release the thermal replay trip and ciruit protector]	
AL47	Pump over current	A.STP		
AL50	Incorrect phase error	A.STP	The phase of the power line is connected by incorrect phase.	
AL51	Phase board over current	A.STP	Check that there is no power failure such as ground fault, short circuit, voltage fluctuation, abnormal interphase voltage, open phase, surge. Release the circuit protector thermal trip refer operation manaual [6.3.2 How to release the thermal replay trip and ciruit protector]	

Note:
*1: Air cooled type does not generate this alarm.

Code	Description	Operation	Cause/Remedy (Press the reset key after eliminating the cause.)
AL11	Low compressor suction temp.	P.RUN	・Check that the circulating fluid flows. ・Use 15% ethylene glycol aqueous solution with the set temperature lower than 10°C.
AL12	Low super heat temperature	P.RUN	
AL13	High compressor discharge pressure	P.RUN	Check that the ambient temperature, facility water, and heat load satisfy the specifications.
AL15	Refrigerant circuit pressure (high pressure side) drop	P.RUN	Refrigerant circuit failed. Ask for service for the refrigerant circuit.
AL16	Refrigerant circuit pressure (low pressure side) rise	P.RUN	Check that the ambient temperature, facility water, and heat load satisfy the specifications.
AL17	Refrigerant circuit pressure (low pressure side) drop	P.RUN	・Check that the circulating fluid flows. ・It is possible that refrigerant is leaking. Ask for the service.
AL18	Compressor running failure	P.RUN	Restart and check if the compressor runs after leaving for 10 minutes.
AL19	Communication error	OFF	No request message is sent from the host computer. Send message again.
AL20	Memory error	A.STP	Controller failure. Ask for service.
AL21	DC line fuse cut	A.STP	Fuse for the power supply output of the contact input/output connector has blown. ・Ask for service for the fuse of the output voltage circuit. ・Check that there is no incorrect wiring and the current load is within the specified range.
AL22	Circulating fluid discharge temp. sensor failure	A.STP	Short circuit or broken wire of the temperature sensor. Ask for service for the temperature sensor.
AL23	Circulating fluid return temp. sensor failure	A.STP	
AL24	Compressor suction temp. sensor failure	P.RUN	
AL25	Circulating fluid discharge pressure sensor failure	A.STP	Short circuit or broken wire of the pressure sensor. EEEE is displayed on the PI display of the main display and check monitor display. Ask for service for the pressure sensor.
AL26	Compressor discharge pressure sensor failure	P.RUN	Short-circuit or broken wire of the pressure sensor of the refrigerant circuit. Ask for service for the pressure sensor.
AL27	Compressor suction pressure sensor failure	P.RUN	

A.STP: Compressor, pump and fan stop operation.
A.RUN: Compressor, pump and fan stop operation continues operation.
P.RUN: Compressor and fan stop operation, and, pump continues operation.
OFF: This alarm will not be genrated.

10.2 Other Errors

The causes and remedies for failures that are not indicated by alarm numbers are shown in the following table:

Content of Failure	Cause	Remedy
The operation panel displays nothing.	The breaker of the user's power supply or/and the breaker is not turned ON.	Turn ON the breaker.
	The breaker of the user's power supply or the optional breaker has failed.	Replace the breaker.
	No power supply. (e.g. Breaker(s) in the power supplying route has not been turned ON.)	Supply the power.
	The breaker for the user's facility or the optional breaker has tripped due to short-circuit or leakage of electricity.	Repair the short-circuited part or the electricity leaking part.
The [RUN] LED does not light up even when the [RUN/STOP] switch is pressed.	Communication has been set.	Check if the communication setting has been set. Change the communication setting to 'Local mode'.
	Failure of the [RUN] LED	Replace the controller.
	Failure of the [RUN/STOP] switch.	Replace the controller.

11 Product Disposal

This product should not be disposed of as municipal waste. Check your local regulations and guidelines to dispose this product correctly, in order to reduce the impact on human health and the environment.

12 Declaration of Conformity

12.1 Below is a sample Declaration of Conformity (DoC) used for this product. An actual DoC will be supplied with each product.

SMC CE

Doc. No. Sample

EU DECLARATION OF CONFORMITY
Original declaration

SMC Corporation
4-14-1 Soto-Kanda, Chiyoda-ku, Tokyo 101-0021 Japan

declares under its sole responsibility, that the following equipment:

Thermo Chiller
HRS Series
Serial No.: yo0001 onwards
is in conformity with the relevant Union harmonisation legislation and has been demonstrated to fulfil the requirements with reference to the harmonised standard(s) as listed below

Directive	Requirements	Harmonised standards
Machinery Directive 2006/42/EC	All applicable Essential Health and Safety Requirements of Annex I	EN / ISO12100:2010 EN 60204-1:2006 +A1:2009
EMC 2014/30/EU	Essential requirements set out in Annex I	EN 61000-6-2:2005 EN 61000-6-4:2007 + A1:2011 EN 61000-3-2:2007 + A1:2009 EN 61000-3-3:2008

Name and address of the person authorised to compile the technical file:
Mr. G. Barajcezeva, Executive Officer, SMC European Zone,
SMC España, S.A. Zuazobidea 14, 01015 Vitoria, Spain

Importer/Distributor in EU and EFTA:

Country	Company	Telephone	Address
Austria	SMC Austria GmbH	(43) 2262 62280	Girakstrasse 8, AT-2100 Korneuburg
Belgium	SMC Belgium N.V./S.A.	(32) 3-355-1464	Ternesselei 232, B-2160 Wommelgem
Bulgaria	SMC Industrial Automation Bulgaria EOOD	(359) 2 8744450	Business Park Sofia, Building 8-6th Floor, BG-1715 Sofia
Croatia	SMC Industrijska Automatika d.o.o.	(385) 1 370 74 88	Zagrebačka Avenija 104,10 000 Zagreb
Czech Republic	SMC Industrial Automation CZ s.r.o.	(420) 541-424611	Hudcova 78a CZ-61200 Brno
Denmark	SMC Pneumatik A/S	(45) 70 25 29 00	Egeskovvej 1, DK-8700 Horsens
Estonia	SMC Automation OÜ	(372)651-370	Värvi 5, 10621 Tallinn
Finland	SMC Automation Oy	(358) 207 513 513	PL72, Tiistinnintyntie 4, SF-02031 Espoo
France	SMC France	(33) 1-6476-1000	1 Boulevard de Strasbourg, Parc Gustave Eiffel, Bussy Saint Georges, F-77607, Marne La Vallee, Cedex 3
Germany	SMC Deutschland GmbH	(49) 8102-4002-0	Boschring 13-15, D-63329 Egelsbach
Greece	SMC Italia Hellas Branch	(30) 210-2717265	Anagenniseos 7-9 - P.C. 14342, Nea Philadelphia, Athens
Hungary	SMC Hungary Ipari Automatizálási Kft.	(36) 23-511-390	Torbágy u. 19, HU-2045 Törökbálint
Ireland	SMC Industrial Automation (Ireland) Limited	(353) 1-402-5000	2002 Citywest Business Campus, Naas Road, Saggart, Co. Dublin
Italy	SMC Italia S.p.A.	(39) 039-9089-1	Via delle Donne Lavoratrici, 20861, Brugherio, Monza e/o Brianza (MB)
Latvia	SMC Pneumatics Latvia SIA	(371)781-77-00	Dzelzavas str. 117, Riga LV-1021
Lithuania	SMC Automation UAB	(370) 5 230 8118	Žalgirio g. 96, LT-09300 Vilnius, Lietuva
Netherlands	SMC Nederland BV	(31) 20-531-5888	De Ruyterkade 120, NL-1011 AB Amsterdam
Norway	SMC Pneumatics Norway AS	(47) 67-12-90-20	Vollsveien 13c, Granfoss Næringspark, N-1366Lysaker
Poland	SMC Industrial Automation Polska Sp. z o.o.	(48) 22 211 96 00	ul. Stefana Batorego 10A, Pass, 05-870 Blonie,
Portugal	SMC Sucursal Portugal, S.A.	(351) 910 489 748	Rua De EngFerrerira Dias 452 4100-246, Porto
Romania	SMC Romania S.r.l.	(40) 21-3005111	Str. Frunzei, Nr.29,Sector 2 Bucharest
Slovakia	SMC Priemyselna Automatizacia, Spol.s.r.o.	(421) 41-3213211	Fantranská 1223, Teplickanadvahom, 01301
Slovenia	SMC Industrijska Avtomatika d.o.o.	(386) 7 388 5412	Mirnskacesta 7, SLO-8210 Trebnje
Spain	SMC España, S.A.	(34) 945-184-100	Zuazobidea 14, 01015 Vitoria
Sweden	SMC Pneumatics Sweden AB	(46) 8-603-07-00	Ekhagsvägen 29-31, SE-14171 Segeltorp
Switzerland	SMC Schweiz AG	(41) 62-366-5151	Dorfstrasse 7, Postfach 117, CH-8484, Weisslingen
United Kingdom	SMC Pneumatics (U.K.) Ltd	(44) 1908-563888	Vincent Avenue, Crownhill, Milton Keynes, Bucks MK8 0AN

Tokyo, 22 January 2020

Hiroyuki Sakama
General Manager
Product Development Division - VI

13 Contacts

Country	Company	Address
Austria	SMC Austria GmbH	Girakstrasse 8, AT-2100 Korneuburg
Belgium	SMC Belgium N.V./S.A.	Ternesselei 232, B-2160 Wommelgem
Bulgaria	SMC Industrial Automation Bulgaria EOOD	Business Park Sofia, Building 8-6th Floor, BG-1715 Sofia
Croatia	SMC Industrijska Automatika d.o.o.	Zagrebačka Avenija 104,10 000 Zagreb
Czech Republic	SMC Industrial Automation CZ s.r.o.	Hudcova 78a CZ-61200 Brno
Denmark	SMC Pneumatik A/S	Egeskovvej 1, DK-8700 Horsens
Estonia	SMC Automation OÜ	Värvi 5, 10621 Tallinn
Finland	SMC Automation Oy	PL72, Tiistinnintyntie 4, SF-02031 Espoo
France	SMC France	1 Boulevard de Strasbourg, Parc Gustave Eiffel, Bussy Saint Georges, F-77607, Marne La Vallee, Cedex 3
Germany	SMC Deutschland GmbH	Boschring 13-15, D-63329 Egelsbach
Greece	SMC Italia Hellas Branch	Anagenniseos 7-9 - P.C. 14342, Nea Philadelphia, Athens
Hungary	SMC Hungary Ipari Automatizálási Kft.	Torbágy u. 19, HU-2045 Törökbálint
Ireland	SMC Industrial Automation (Ireland) Limited	2002 Citywest Business Campus, Naas Road, Saggart, Co. Dublin
Italy	SMC Italia S.p.A.	Via delle Donne Lavoratrici, 20861, Brugherio, Monza and Brianza (MB)
Latvia	SMC Pneumatics Latvia SIA	Dzelzavas str. 117, Riga LV-1021
Lithuania	SMC Automation UAB	Žalgirio g. 96, LT-09300 Vilnius, Lietuva
Netherlands	SMC Nederland BV	De Ruyterkade 120, NL-1011 AB Amsterdam
Norway	SMC Pneumatics Norway AS	Vollsveien 13c, Granfoss Næringspark, N-1366Lysaker
Poland	SMC Industrial Automation Polska Sp. z o.o.	ul. Stefana Batorego 10A, Pass, 05-870 Blonie,
Portugal	SMC Sucursal Portugal, S.A.	Rua De EngFerrerira Dias 452 4100-246, Porto
Romania	SMC Romania S.r.l.	Str. Frunzei, Nr.29,Sector 2 Bucharest
Slovakia	SMC Priemyselna Automatizacia, Spol.s.r.o.	Fantranská 1223, Teplickanadvahom, 01301
Slovenia	SMC Industrijska Avtomatika d.o.o.	Mirnskacesta 7, SLO-8210 Trebnje
Spain	SMC España, S.A.	Zuazobidea 14, 01015 Vitoria
Sweden	SMC Pneumatics Sweden AB	Ekhagsvägen 29-31, SE-14171 Segeltorp
Switzerland	SMC Schweiz AG	Dorfstrasse 7, Postfach 117, CH-8484, Weisslingen
United Kingdom	SMC Pneumatics (U.K.) Ltd.	Vincent Avenue, Crownhill, Milton Keynes, Bucks MK8 0AN

SMC Corporation

URL : http// www.smcworld.com (Global) http// www.smceu.com (Europe)
'SMC Corporation, Akihabara UDX15F, 4-14-1, Sotokanda, Chiyoda-ku, Tokyo 101 0021
Specifications are subject to change without prior notice from the manufacturer.