EX9-PE1-X## as SRP/CS

・Product name	:	Power Block
・Part No.	:	EX9-PE1-X15
		EX9-PE1-X22
		EX9-PE1-X23
		EX9-PE1-X24

SMC Corporation

EX9-PE1-X## as a Safety Related Part of a Control System (SRP/CS)

1. Overview

This document applies to the following product.

Product name	Part No.
Power block	EX9-PE1-X15
	EX9-PE1-X22
	EX9-PE1-X23
	EX9-PE1-X24

The EX9-PE1-X## allows external power to be used to operate groups of valves in a manifold instead of the US2 (PWR(V)) supply. If the reason for doing this is to achieve a safety function, as defined in EN ISO 13849, then there are some issues to be taken into account and some countermeasures to be applied. This document lists the known issues as of the document date and is not an exhaustive list of all possible issues. This document is only a guide and is not a substitute for a detailed analysis of the complete system which must be carried out by a qualified competent person before it is taken into service.

2. US2 0V issue

This is an issue that may occur in normal operation. If the US2 0V connection is lost all the valves powered by the SI unit and the EX9-PE1-X## will turn on.

Countermeasure:

a) Ensure that the US2 0V connection is secure and cannot become disconnected.

Or

b) If a) cannot be achieved, then do not connect the 0V of the EX9-PE1-X## to the 0V of the supply.

3. Use with safety output modules

There are different versions of the EX9-PE1-X## so a summary of the key features is shown in Appendix 1. The system designer shall refer to the documentation supplied with the respective safety output modules to determine its suitability and achievable performance level in the application.

3.1 Low-side Switch Bypass

Many manufacturers make safety output modules that have a 24V output controlled by a high side switch and a 0V output controlled by a low side switch. These switches are between the 24V supply and the 0V supply to the safety module.

The EX9-PE1-X## connects the 0V of its two power supplies to the 0V of the SI Unit either directly or by a diode. This means that if a safety output module is powered from the same power supply as the SI Unit, then the low side switches are bypassed.
It may be that the safety module will detect this as part of the diagnostics if the test pulse is enabled. But in some cases, the low side switch might be a switch of “last resort” and not be diagnosed in normal operation.
To avoid this problem either countermeasure 1 or 2 may be employed

3.1.1 Countermeasure 1

Do not use with safety modules that have a low side switch output. Only use with modules that have a direct 0V connection and double high side switches.

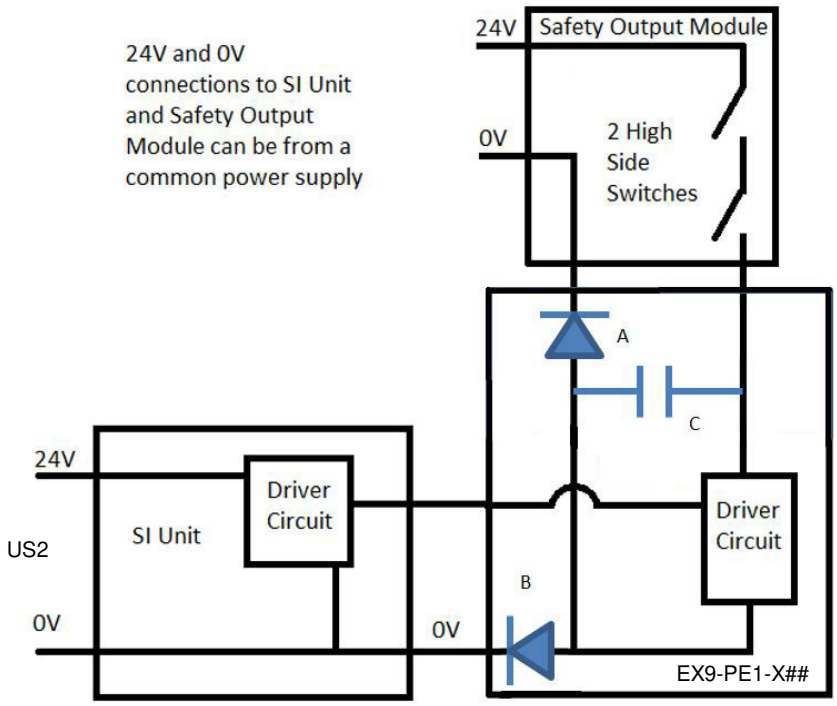

3.1.2 Countermeasure 2

Use a fully galvanically isolated power supply for the safety output module, so that there is no connection between the safety module power supply 0V Isol and the power supply 0V of the SI unit other than the internal EX9-PE1-X## connection.

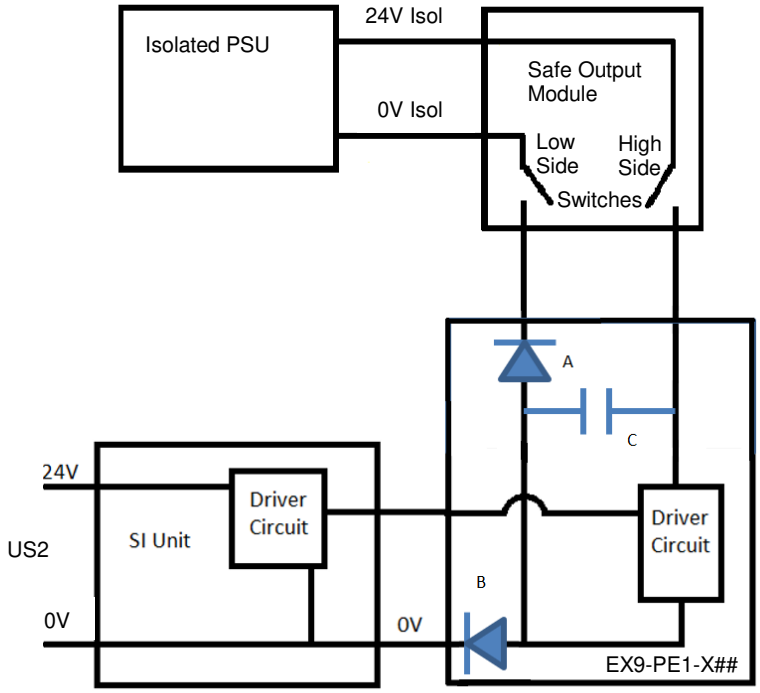

3.2 Test pulses

Safety output modules usually use what are called test pulses, sometimes called light and dark tests. The principle is to operate the high side or low side switch for a very short period of time to check that the switch is working. This testing is needed to ensure conformity of the requirements of the certification.
The test pulse needs to be short to prevent mis-operation of the valves, and 0.5 ms should usually be suitable. Some modules allow pulse testing to be disabled, but this will affect the safety performance level.
A problem arises with this pulse testing if there is significant capacitance on the output as there is with the EX9-PE1-X##. When the switch is opened the voltage is held on the capacitance and does not fall. The safety module diagnostics then thinks that the switch has not opened and initiates a fault condition.
Some safety modules have an active discharge or require a minimum load current to be drawn to make sure that the voltage sufficiently falls when the switch is opened.
One solution is to include a diode in series with the +24V safe output to the EX9-PE1-X##.
But in this case the safety output module cannot detect any fault that may happen on the EX9-PE1-X## side of the diode, and so any such fault shall be excluded by the system designer.

Use in Cat. B & Cat. 1 Architectures

The EX9-PE1-X## can be used in Cat. B and Cat. 1 Architectures. A single failure can cause the loss of the safety function and is not diagnosed.

With a device such as the EX9-PE1-X## that has voltage supplied from the SI unit as well as the safe supply, there is the possibility of a fault connecting the two together (cross circuit). As the EX9-PE1-X## have opto-isolators it is possible that these may meet the fault exclusion requirement of EN ISO 13849-2 table D.19 in which case such a failure could be excluded by the system designer.

Use in Cat. 2, 3, 4 Architectures

As there is no possibility to check the safety function of all the components in the EX9-PE1-X##, it cannot be used in Cat. 2 architectures.

However, it is possible to use the EX9-PE1-X## as one channel of a Cat. 3 or Cat. 4 system. That would mean that in addition to the air supply being controlled by the valves operated by the EX9-PE1-X##, the air supply should be controlled by a separated independent channel. The diagnostics would need to confirm the correct operation of each of the channels at the output point. There are some examples such as cases where the air supply to a cylinder is controlled by a valve operated by the EX9-PE1-X## as one channel and a pilot operated check valve also controls the air supply and is controlled by an independent method, which could be safe control of valve power to a separate SI unit and/or EX9-PE1-X##.
The selection of the system architecture is the responsibility of the system designer, who must be qualified to design safety systems that meet the requirements of the specific application and the applicable legislation.

References

EN ISO 13849-1:2015
EN ISO 13849-2:2012

Relevant EX9-PE1-X## Drawings available for internal use from SMC Japan on request.

Appendix 1 EX9-PE1-X## Options

Model - EX9-PE1-X##	Operating valves	Diode (B) for reverse protection in EX9-PE1-X## 0V to SI 0V	Diode (A) in EX9-PE1-X## 0V to Pin2(0V) and diode in 0V to Pin3(0V)	Direct EX9-PE1-X## 0V connection to SI 0V	Opto-coupler between SI output and EX9-PE1-X## driver	10uf capacitor (C) 24V to 0V in EX9-PE1-X##
X15	0 to 7	✓	✓	—	✓	✓
X22	8 to 15	✓	✓	—	✓	✓
X23	16 to 23	—	✓	✓	✓	✓
X24	24 to 31	—	✓	✓	✓	✓