SMC
Expertise – Passion – Automation

Scan the QR code to answer the questionnaire.

Magnet gripper with buffer/ pivoting buffer

Magnet gripper with buffer/ Pivoting buffer

MHM-X7312/X7311

With buffer

With pivoting buffer

Main features

- **For workpieces of varying heights**
- **Pivoting buffer type is suitable for adsorbing workpiece with an angle**
  Pivoting rotating angle: 30°
- **Buffer stroke: 25 mm, 50 mm, 75 mm**
- **The buffer assembly can be replaced.**
  (Buffer assembly ⇔ Pivoting buffer assembly)
- **Can be retrofitted on to standard products (Basic type body only)**

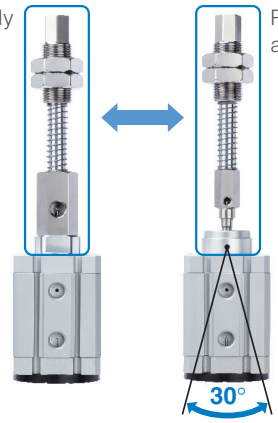

(Pivoting rotating angle)

Specifications

Magnet Gripper

Bore size		32 mm
Holding force	**Workpiece thickness: 2 mm**	250 N
	Workpiece thickness: 6 mm	500 N

Buffer

Buffer specifications		Rotating
Buffer stroke		25 mm, 50 mm, 75 mm
Spring reactive force	**At 0 stroke**	6.9 N
	At buffer stroke	11.8 N
Rotating angle		30°

Application examples

Transfers workpieces at different heights.

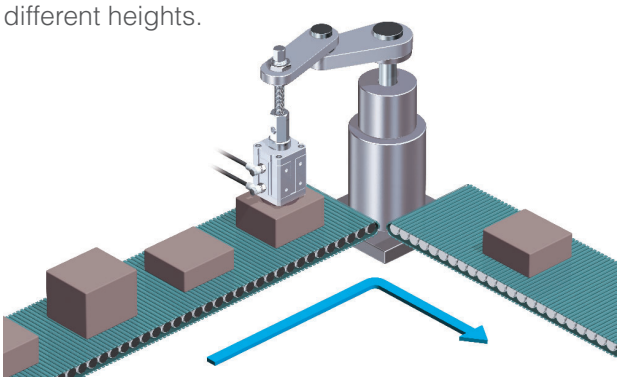

Transfers long and thin steel plates.

Pivoting buffer type is suitable for adsorbing and transferring uneven surfaces of workpieces.

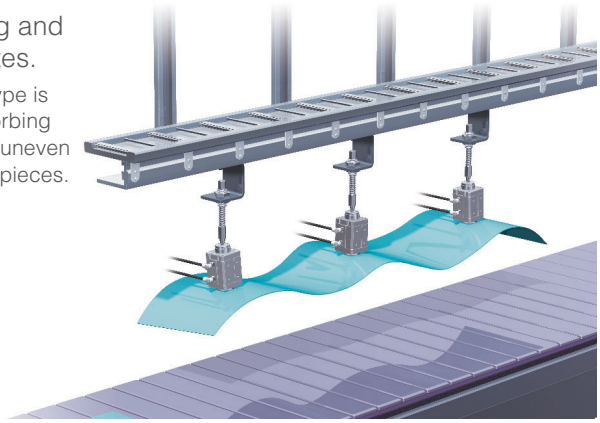

⚠Caution

The application described here is for reference only and performance is not guaranteed. For actual usage in various other applications, please conduct thorough evaluation and validation testing in order to determine the feasibility under your actual usage conditions. Furthermore, please contact your local SMC sales representative for individual pricing and delivery verification.