Micro Mist Lubricators (Float Switch)
Model AL430-02~04-1S-1/-2

Operation Manual

Specifications

Modell	AL430	AL430-#-1
Port size	1/4, 3/8, 1/2	
Fluid	air	
Ambient and fluid temperature	5° - 60°C	
Proof pressure	1.0 MPa	
Operating pressure range	0.05 - 0.2 MPa	
Oil capacity	170 cm^3	1000 cm^3
Recommended lubricant	Class 1 turbine oil (ISO VG32)	
Bowl material	Polycarbonat	Metal
Bowl guard	Aluminium Die Cast	
Weight	1.2 kg	

Switch		IS400-#-X209
Proof pressure		1.5 MPa
Max. working pressure		1.0 MPa
Ambient and fluid temperature		5° - 60°C
Max. Contact Point Capacity		AC: 50 VA, DC: 50 W
Max. Operanting Current		AC: 0.5 A, DC: 0.5 A
Max. Operating Voltage		AC: 50 V, DC: 75 V
Contact Constitution		1a, 1b
Standards		Product do not need CE-marking as they're out of scope

1. Intended Use

The Mirco Mist Lubricator has been designed for lubricating and cooling ball bearings, plain bearings, gears, chains to prevent them from wearing an to reduce friction.
Unlike conventional oilers (oil fog oilers), it will produce very fine oil mist, thus making it possible to transfer lubricant to pneumatic equipment at the further distance with no waste of lubricant.

2. How To Install

1) The lubricator should be installed with an arrow on the body pointing the air flow direction and the bowl turned down. (The connection port with an arrow on it shows an inlet side)
2) INSTALL a filter having a mesh of less than 10u to inlet pipe.

3. How To Fill Oil

Remove the plug, and fill fresh oil through the hole.
Do not over-fill the oil beyond the upper limit indicated on the bowl.

4. How To Adjust

1) Adjusting amount of oil droplets.
   Turning the oil feed adjusting screw counterclockwise will increase oil droplets an turning it clockwise will decrease.
2) Adjusting air flow rate.
   Turning the air feed adjusting screw counterclockwise will increase air flow rate and turning it clockwise will decrease.

5. Trouble Shooting

1) When no oil droplet it produced though air is lowing.
   (a) Wrong piping direction ….. Change direction.
   (b) Little or no oil in blow ….. Fill oil.
   (c) Loaded felt ….. Replace felt.
   (d) Blocked oil feed adjusting screw ….. Take out screw and clean it.

2) When oil leaks out of feed adjusting screw.
   (a) Excessively opened screw ….. Close a little.
   (b) Damaged needle guide “O” ring 23 ….. Replace “O” ring.

6. Caution

1) Use fresh, clean oil.
2) In replenishing oil, care should be paid lest dust should get in oil.
3) Check amount of oil droplets once a day.

7. Specifications

Refer table

8. Float Switch

1) This Float Switch is used in level control system to make or break an electrical circuit through a placement of the float.
   Light weight and compact design have made installation and maintenance easier.
2) Specifications
   Refer table
3) Features
   a) Easy installation
   b) Low price and reliable operation
   c) Compact and light weight
   d) Independent contacts
   e) Easy maintenance

4) Construction and Operation

The float made of foam material which houses permanent magnets moves up and down as liquid level fluctuates. It slides up- and downward in reference to the switch holder, turning the reed switch on and off.

5) Caution Required in Installation

a) Install the unit so that the float may by vertical.

b) Make sure that the liquid temperature will never exceed the allowable range.

c) For applications in which larger current capacity than rated contact capacity is anticipated, install an electromagnetic relay or the like.

6) Applications

Float switch opens or shuts an electric circuit by float displacement, and it used for liquid level detection. It i s light and small. Easy handling and easy maintenance have been achieved.

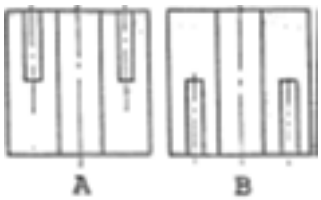

Model	IS4000-1-X209	IS400-2-X209
How to mount of float		
Contact point	Switch OFF at float up Switch ON at float down	Switch ON at float up Switch OFF at float down
Wiring diagram	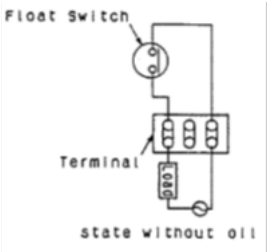	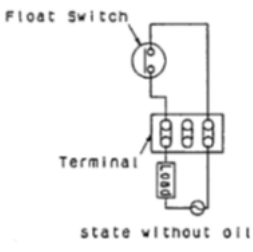

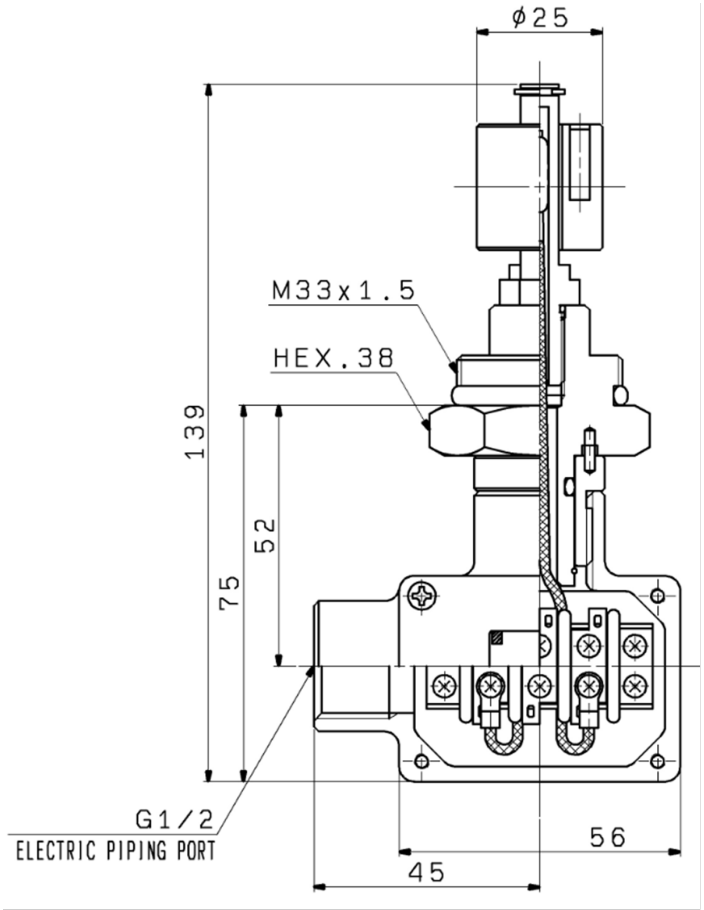

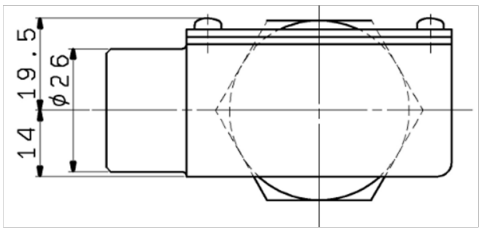

DWG.NO.	MOUNTING DIRECTION IN FLOAT	FLOAT MOUNT DIRECTION	ELECTRIC CIRCUIT *	CONTACT CONSTITUTION
IS400-1-X209		SWITCH OFF WITH FLOAT UP SWITCH ON WITH FLOAT DOWN		1b
IS400-2-X209		SWITCH ON WITH FLOAT UP SWITCH OFF WITH FLOAT DOWN		1a

*THERE IS NO POLARITY IN WIRING.

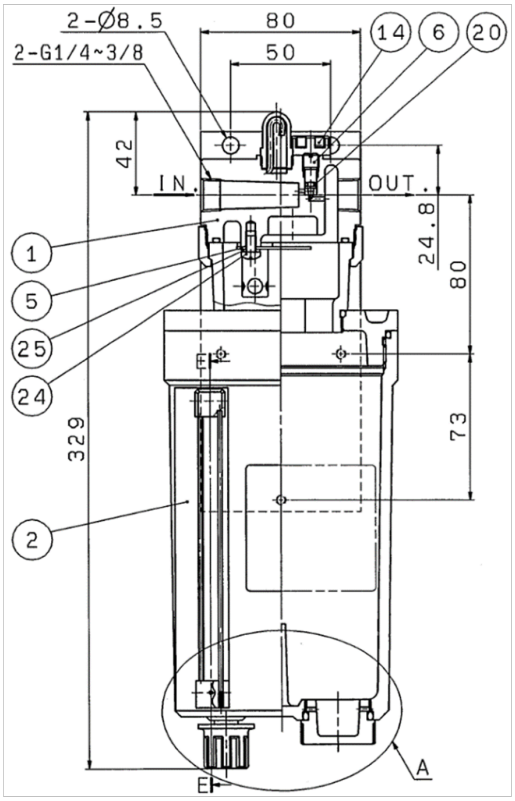

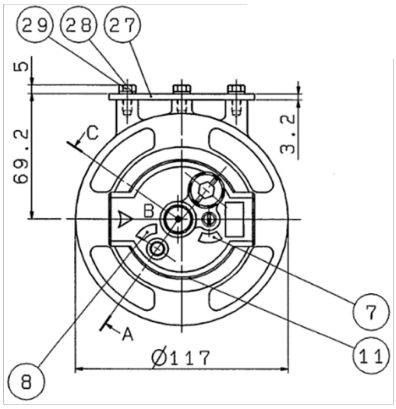

DETAILED LIST OF OPTIONS PRODUCT SPECIFICATION

FIG.1 BOWL ASSEMBLY PORTION A SCALE1/2

CODE	1	1S-1	1S-2
PART NO.	800147AP	800147A-S1P	800147A-S2P
EXTERNAL APPEARANCE DRAWING	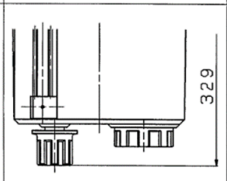	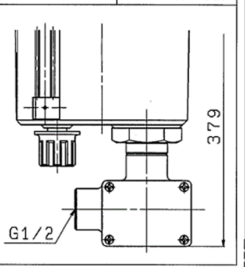	

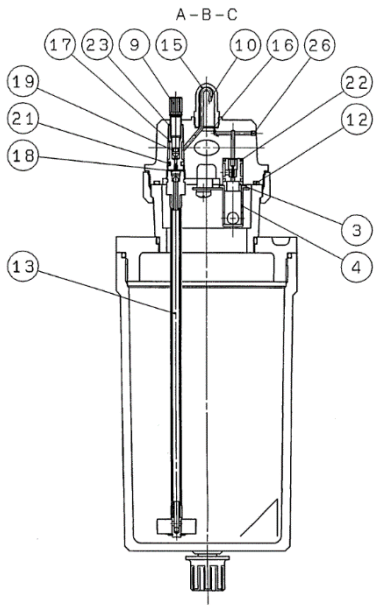

Item	Part name	Material	QTY
1	Body	Zinc Die Casting	1
2	Bowl Assembly		1
3	Nozzle Holder Assembly		1
4	Cap	Brass BAR	1
5	Plate	Brass Plate	1
6	Adjust Screw Air	Stainless Steel Wire	1
7	Name Plate	Polystel	1
8	Name Plate	Polystel	1
9	Adjust Screw Oil	Brass BAR	1
10	Dripe Tube	Copper Tube	1
11	Name Plate	PET	1
12	O-Ring	NBR	1
13	Siphon Tube Assembly		1
14	Plug Assembly		1
15	Sight Dome	Polycarbonate	1
16	Packing	Urethane Rubber	1
17	Adjust Guide	Brass BAR	1
18	Packing	Urethane Rubber	1
19	O-Ring	NBR	1
20	O-Ring	NBR	1
21	O-Ring	NBR	1
22	O-Ring	NBR	1
23	O-Ring	NBR	1
24	Screw	Brass Wire	1
25	Spring Washer	Stell Wire	1
26	Ball	Stainless	1
27	Bracket	Steel Plate	1
28	Spring Washer	Steel Wire	3
29	Bolt	Steel Wire	3